KINGDOM OF THAILAND
MINISTRY OF TRANSPORT
DEPARTMENT OF HIGHWAYS

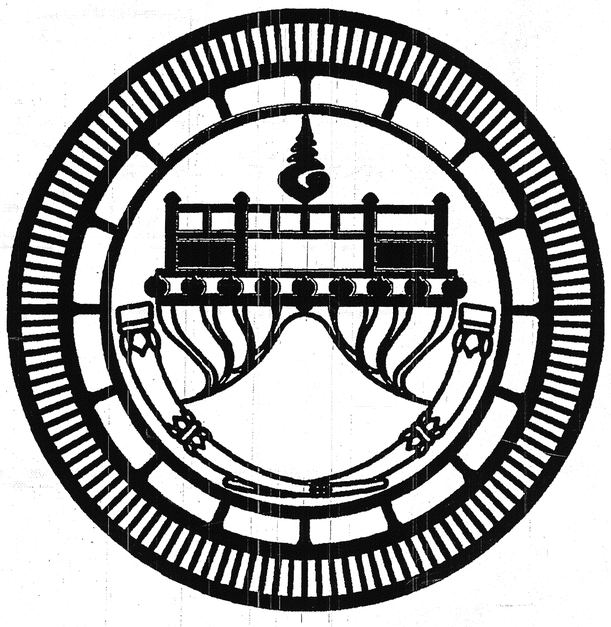

STANDARD DRAWINGS

FOR

HIGHWAY DESIGN AND CONSTRUCTION

2015 REVISION

รายการแก้ไขครั้งที่ 1

แก้ไขแบบรายละเอียดงานโครงสร้างและแบบงานทาง

รายการแก้ไขดังนี้

1. แก้ไขข้อขัดแย้งในแบบงานโครงสร้างสะพาน และเพิ่มรายละเอียดปริมาณ CEMENT CONTENT โดย

- ยกเลิก SHEET NO. 200–213,215–219,221,223–256 289,306,297
- ให้ใช้ SHEET NO. 200/R1–213/R1,215/R1–219/R1,221/R1, 223/R1–256/R1,289/R1,306/R1,297/R1

2. แก้ไขข้อขัดแย้งในแบบงานทางโดย

- ยกเลิก SHEET NO. 76–77
- ให้ใช้ SHEET NO. 76/R1–77/R1

ออกแบบ DOH & CONSULTANT ตรวจ 2 มิ.ย. 60

เห็นชอบ 5/6/60 อนุญาต 6/6/60

ผลบ. แทนอธิบดี

รายการแก้ไขครั้งที่ 2

แก้ไขแบบรายละเอียดงานโครงสร้างสะพาน , งานทาง

รายการแก้ไขดังนี้

1. แก้ไขข้อขัดแย้งในแบบงานโครงสร้างสะพานโดย

- ยกเลิก SHEET NO. 261,268–271,278,282–286,288 ,83
- ให้ใช้ SHEET NO. 261/R1,268/R1–271/R1,278/R1,282/R1 –286/R1, 288/R1,83/R1

ออกแบบ DOH & CONSULTANT ตรวจ 7 มิ.ย. 61

เห็นชอบ 7/มิ.ย./61 อนุญาต 8 มิ.ย. 61

ผลบ. แทนอธิบดี

รายการแก้ไขครั้งที่ 3

แก้ไขแบบรายละเอียดงานทาง รายการแก้ไขดังนี้

1. แก้ไขข้อขัดแย้งในแบบงาน CONCRETE BARRIER

- ยกเลิก SHEET NO. 84,86
- ให้ใช้แบบ SHEET NO. 84/R1, 86/R1

2. แก้ไขตารางการคำนวน WIDENNING DETAILS

- ยกเลิก SHEET NO. 27
- ให้ใช้ SHEET NO. 27/R1

ออกแบบ DOH & CONSULTANT ตรวจ 6/ธ.ค./61

เห็นชอบ 10/12/61 อนุญาต 11/ธ.ค./61

ผลบ. แทนอธิบดี

รายการแก้ไขครั้งที่ 4

แก้ไขแบบรายละเอียดงานโครงสลาง รายการแก้ไขดังนี้

- ยกเลิก SHEET NO. 255/R1, 283/R1, 299 , 234/R1 , 297/R1, 305
- ให้ใช้ SHEET NO. 255/R2, 283/R2, 299/R1 , 234/R2, 297/R2, 305/R1

ออกแบบ DOH & CONSULTANT ตรวจ 3/ธ.ค./62

เห็นชอบ 3/12/62 อนุญาต 4/12/62

ผลบ. แทนอธิบดี

3 ธ.ค. 62 4 ธ.ค. 62

รายการแก้ไขครั้งที่ 5

แก้ไขแบบรายละเอียดงานโครงสร้าง รายการแก้ไขดังนี้

- ยกเลิก SHEET NO. 256/R1, 269/R1, 278/R1, 288/R1, 307, 333, 212/R1, 213/R1
- ให้ใช้ SHEET NO. 256/R2, 269/R2, 278/R2, 288/R2, 307/R1, 333/R1, 212/R2, 213/R2

ออกแบบ DOH & CONSULTANT ตรวจ 30 พ.ย. 64

เห็นชอบ 1/12/64 อนุญาต 1/12/64

ผลบ. แทนอธิบดี

Preface

As the 1994 standard drawings have been in effect for a long time, some parts have become outdated in terms of design and material standards or are inconsistent with current practice. In addition, construction technology has progressively developed and changed. Revisions and additions of standard drawings have been successively approved. Therefore, it is necessary to compile, revise and prepare new standard drawings so as to improve highway safety and support truck weight limit changes by implementing the current advanced technologies and innovation in design and construction for enhanced efficiency in highway development. This 2015 revision of standard drawings has thus been prepared, with the following improvements/developments.

- Update of design-related standards and references to be consistent with the standards of Department of Highways (DOH) and international standards
- Update of construction materials and reference to the standards consistent with current practice
- Design revision to reduce construction and maintenance problems and obstacles
- Addition of new typical drawings to cover every part of work, drawing set organization for easy use, etc.

This edition of standard drawings presents general typical drawings to be adopted as operational guidelines or recommendations for all DOH's divisions and sections for detailed design and construction works so that proper standards are consistently adopted throughout the country. The use of standard drawings shall be at the designer's discretion and judgement in selecting appropriate drawings or modifying the details to be suitable for the actual conditions of each site. Contractors and construction supervisors shall adopt these standard drawings as implementation guidelines so that the construction works shall be standardized throughout the country.

This 2015 revision of standard drawings comprise 2 drawing sets: 1) standard drawings for highway construction, which are presented in this document, and 2) standard drawings for construction of large bridges and others.

The standard drawings for highway construction consist of 2 parts as follows:

1) Standard drawings for road work, comprising 8 divisions: typical cross section / geometric and general design / traffic sign, marking and safety devices / drainage systems / slope stability and erosion protection / highway environmental and handicap sidewalks / roadway lighting / road traffic signals;
2) Standard drawings for structural work, comprising 4 divisions: bridges with span not more than 20 meters / bridge accessories / reinforced concrete box culverts / retaining walls

The Department of Highways' mission involves a large number of design and construction projects spatially located all over the country, with diverse topographical conditions, obstacles, and details of problems. Consequently, it is not possible to prepare designs for all issues. To use the standard drawings, designers, contractors, and construction supervisors must draw upon their knowledge and experience, and study the details presented in each drawing, both the design and specifications, in order to thoroughly understand the objectives, recommendations and constraints before using the drawings or improving the details to suit the site conditions. This will result in correct and standardized design and construction works that can be efficiently and sustainably implemented.

Furthermore, a manual of standard drawings is produced as a separate document for ease of use, explaining the objectives, recommendations for use of drawings, constraints on the use as well as examples of complex designs in brief.

It is expected that the 2015 updated standard drawings will significantly contribute to the operational efficiency of all the Department of Highways' divisions and sections.

PART 1 LIST OF DRAWINGS FOR ROAD WORK

SHEET NO.	TITLE		DRAWING NO.
1	ABBREVIATION AND SYMBOLS	–	AS–001
SECTION 1) TYPICAL CROSS SECTIONS			
2	TYPICAL CROSS–SECTION FOR 2–LANES HIGHWAY	–	TS–101
3	TYPICAL CROSS–SECTION AT VILLAGE SECTION	NARROW R.O.W. – I	TS–201
4		NARROW R.O.W. – II	TS–202
5		FIRST STAGE FOR LIGHTLY TO MEDIUM POPULATED AREA	TS–203
6	TYPICAL CROSS–SECTION FOR DIVIDED HIGHWAY	R.O.W. WIDTH 20.00 M.	TS–301
7		R.O.W. WIDTH 30.00 M.	TS–302
8		R.O.W. WIDTH 40.00 M.	TS–303
9		R.O.W. WIDTH 50.00 M.	TS–304
10		R.O.W. WIDTH 60.00 M. – I	TS–305
11		R.O.W. WIDTH 60.00 M. – II	TS–306
12		R.O.W. WIDTH 60.00 M. – III	TS–307
13		R.O.W. WIDTH 70.00 M. – I	TS–308
14		R.O.W. WIDTH 70.00 M. – II	TS–309
15		R.O.W. WIDTH 70.00 M. – III	TS–310
16		R.O.W. WIDTH 80.00 M. – I	TS–311
17		R.O.W. WIDTH 80.00 M. – II	TS–312
18		R.O.W. WIDTH 80.00 M. – III	TS–313
19	TYPICAL CROSS–SECTION FOR DEEP CUT AND HITH FILL	–	TS–401
SECTION 2) GEOMETRIC & GENERAL DESIGN			
20	SUPERELEVATION ATTAINING AND WIDENING	2–LANE HIGHWAY ON CIRCULAR CURVE	GD–101
21		2–LANE HIGHWAY ON SPIRAL CURVE	GD–102
22		COMPOUND AND REVERSE CURVE	GD–103
23		MULTILANE HIGHWAY DEPERESSED MEDIAN ON CIRCULAR CURVE	GD–104
24		MULTILANE HIGHWAY RAISED MEDIAN ON CIRCULAR CURVE	GD–105
25		MULTILANE HIGHWAY BARRIER MEDIAN ON CIRCULAR CURVE	GD–106
26		MULTILANE HIGHWAY ON SPIRAL CURVE	GD–107
27	TRAVELLED WAY WIDENING DETAILS	WB–19 AND SU–12 DESIGN VEHICLE	GD–201
28	MEDIAN OPENING	–	GD–301
29	U – TURN GUIDELINE	DEPRESSED & RAISED MEDIAN	GD–401
30		BARRIER MEDIAN & SPECIAL U–TURN	GD–402
31	CLIMBING LANE	TWO–LANE AND MULTILANE HIGHWAYS	GD–501
32	EMERGENCY ESCAPE RAMP	–	GD–502
33	JOINT REINFORCED CONCRETE PAVEMENT (JRCP)	PLAN SECTION AND REINFORCEMENT DETAILS	GD–601
34		DETAILS OF JOINT	GD–602
35		DETAILS OF JOINT AT MANHOLE	GD–603
36	CONTINUOUSLY REINFORCED CONCRETE PAVEMENT (CRCP)	PLAN SECTION AND REINFORCEMENT DETAILS	GD–604
37		DETAILS OF JOINT	GD–605
38		DETAILS OF TERMINAL JOINT AND LUG ANCHOR	GD–606
39	PAVEMENT TRANSITION DETAILS	–	GD–607
40	CONCRETE PAVEMENT REPAIRING	–	GD–608
41	TYPICAL SURFACE OVERLAY AND REPAIRING	–	GD–701
42	BRIDGE APPROACH TRANSITION	–	GD–702
43	CLEARING AND GRUBBING	–	GD–703
44	CONNECTION ROAD DETIAIS	–	GD–704
45	SIDE ROAD & PRIVATE DRIVE DATAILS	–	GD–705
46	RIGTH–OF–WAY MONUMENT	–	GD–706
47	KILOMETER MARKER	KILOMETER STONE	GD–707
48		KILOMETER SIGN	GD–708
49	CONCRETE CURB & CURB AND GUTTER	–	GD–709
50	SIDEWALK	–	GD–710
SECTION 3) TRAFFIC SIGN, MARKING AND SAFETY DEVICES			
51	MINOR ROAD SIGN	SIGN & POST DETAILS	RS–101
52		ROAD SIGN AT EXIT AND ENTRANCE	RS–102
53		ROAD SIGN AT INTERSECTION	RS–103
54		ROAD SIGN AT CLIMBING LANE	RS–104
55	TRAFFIC MARKING	MARKING DETAILS – I	RS–201
56		MARKING DETAILS – II	RS–202
57		ROAD STUD	RS–203

PART 1 LIST OF DRAWINGS FOR ROAD WORK (CONT.)

SHEET NO.	TITLE		DRAWING NO.
58	TRAFFIC CONTROL DEVICES FOR HIGHWAY UNDER CONSTRUCTION	TRAFFIC SIGN AND DEVICES – I	RS–301
59		TRAFFIC SIGN AND DEVICES – II	RS–302
60		INSTALLATION GUIDELINE – I	RS–303
61		INSTALLATION GUIDELINE – II	RS–304
62		INSTALLATION GUIDELINE – III	RS–305
63	OVERHEAD AND OVERHANGING SIGN INSTALLATION	–	RS–401
64	INSTALLATION OF OVERHEAD SIGN AND TRAFFIC SIGN ON BRIDGE BARRIERS	–	RS–402
65	OVERHEAD TRAFFIC SIGN	SIGN BOARD DETAILS	RS–403
66		STEEL FRAME FOR MOUNTING WIDTH < 18.00 M.	RS–404
67		STEEL FRAME FOR MOUNTING WIDTH < 20.00 M.	RS–405
68		STEEL FRAME FOR MOUNTING 20.00 < WIDTH < 28.00 M.	RS–406
69		ILLUMINATED SIGN	RS–407
70	OVERHANG TRAFFIC SIGN	STEEL POLE TYPE I FOR SIGN PLATES NOT MORE THAN 52,800 SQ.CM.	RS–501
71		STEEL POLE TYPE II FOR SIGN PLATES NOT MORE THAN 108,000 SQ.CM.	RS–502
72		STEEL POLE TYPE III FOR SIGN PLATES NOT MORE THAN 2x52,800 SQ.CM.	RS–503
73		FOOTING DETAILS	RS–504
74	BARRICADE	TWO LANES AT T–INTERSECTION	RS–601
75		MUTILANES AT T–INTERSECTION	RS–602
76/R1	GUARDRAIL	SINGLE W–BEAM GUARDRAIL	RS–603
77/R1		DOUBLE W–BEAM GUARDRAIL	RS–604
78		INSTALLATION AND W–BEAM GUARDRAIL APPROACH TYPE–I	RS–605
79		INSTALLATION AND W–BEAM GUARDRAIL APPROACH TYPE–II	RS–606
80	GUIDE POST	–	RS–607
81	CONCRETE BARRIER	TYPE I	RS–608
82		TYPE II	RS–609
83		TYPE III : FOR DEEP CUT AND HIGH FILL	RS–610
84		PRE–CAST CONCRETE BARRIER TYPE IA	RS–611
85		PRE–CAST CONCRETE BARRIER TYPE IB	RS–612
86		PRE–CAST CONCRETE BARRIER TYPE IIA	RS–613
87		PRE–CAST CONCRETE BARRIER TYPE IIB	RS–614
88		CONCRETE BARRIER AT BRIDGE APPROACH	RS–615
SECTION 4) DRAINAGE SYSTEMS			
89	R.C. PIPE CULVERT	DIMENSION AND REINFORCEMENT DETAILS	DS–101
90		INSTALLATION DETAILS	DS–102
91	CONCRETE HEADWALL FOR R.C. PIPE CULVERT	END WALL TYPE	DS–103
92		WING WALL TYPE FOR SINGLE CULVERT	DS–104
93		WING WALL TYPE FOR MULTIPLE CULVERTS	DS–105
94		WING WALL TYPE FOR SKEW CULVERTS	DS–106
95	SIDE DITCH LINING	–	DS–201
96	INLET FOR R.C. PIPE CULVERT	DROP INLET FOR SIDE DITCH	DS–301
97		INLET CATCH BASIN	DS–302
98	DROP INLET IN MEDIAN	TYPE A : FOR RAISED MEDIAN	DS–401
99		TYPE B : FOR BARRIER MEDIAN	DS–402
100		TYPE C : FOR DEPRESS MEDIAN – I	DS–403
101		TYPE D : FOR DEPRESS MEDIAN – II	DS–404
102		TYPE E : FOR DEPRESS MEDIAN –III (R.C. BOX CULVERT)	DS–405
103		TYPE F : FOR BRIDGE DRAINNAGE	DS–406
104	R.C. DRAIN OUTLET FOR R.C. PIPE CULVERT	–	DS–501
105	CURB AND DRAIN CHUTE FOR EMBANKMENT PROTECTION	–	DS–502
106	R.C. U–DITCH	TYPE A & B	DS–601
107		TYPE C	DS–602
108		TYPE D & E	DS–603
109		TYPE F : FOR BRIDGE DRAINNAGE	DS–604
110	MANHOLE	TYPE A	DS–701
111		TYPE B	DS–702
112		TYPE C	DS–703
113		TYPE D	DS–704
114		TYPE E : FOR BOX CULVERT (OPEN–TYPE)	DS–705
115		TYPE F : FOR BOX CULVERT (CLOSE–TYPE)	DS–706
116		TYPE G	DS–707
117		TYPE H	DS–708

PART 1 LIST OF DRAWINGS FOR ROAD WORK (CONT.)

SHEET NO.	TITLE		DRAWING NO.
118		TYPE I	DS-709
119		TYPE J	DS-710
SECTION 5) STABILITY AND EROSION PROTECTION			
120	SLOPE PROTECTION FOR FILL SLOPE	SODDING	SP-101
121		RIP RAP	SP-102
122		SACKED CONCRETE	SP-103
123		ROCK AND WIRE MATTRESS	SP-104
124	SLOPE PROTECTION FOR CUT SLOPE	SHOTCRETE	SP-201
125		FERRO-CEMENT	SP-202
126		VETIVER GRASING	SP-203
127		HYDROSEEDING	SP-204
128	SLOPE PROTECTION FOR BRIDGE ABUTMENT	CONCRETE LINING	SP-301
129		MATTRESS AND GABION	SP-302
130	REINFORCE SOIL SLOPE	TYPICAL CROSS SECTION	SP-401
131		MATERIAL SPECIFICATION	SP-402
132	MECHANICALLY STABALIZED EARTH WALL (MSE WALL)	GUIDELINES AND DESIGN CRITERIA OF MSE WALL	SP-501
133		GENERAL ARRANGEMENT MSE WALL FOR BRIDGE APPROACH	SP-502
134		MSE WALL FOR BRIDGE APPROACH TYPE I	SP-503
135		MSE WALL FOR BRIDGE APPROACH TYPE II	SP-504
136		MSE WALL FOR BRIDGE APPROACH TYPE III	SP-505
137		GENERAL ARRANGMENNT MSE WALL FOR ROAD SIDE SLOPE	SP-506
138		TYPICAL SECTION OF MSE WALL FOR HILL SIDE SLOPE	SP-507
139		TYPICAL SECTION OF MSE WALL FOR SIDE SLOPE	SP-508
140		DETAILS OF FACING PANEL AND REINFORCING DETAILS	SP-509
141		DETAILS OF DRAINAGE AND BARRIER	SP-510
142		SPECIAL PROVISIONS FOR MSE WALL CONSTRUCTION AND REINFORCING PROPERTIES - I	SP-511
143		SPECIAL PROVISIONS FOR MSE WALL CONSTRUCTION AND REINFORCING PROPERTIES - II	SP-512
144		SPECIAL PROVISIONS FOR MSE WALL CONSTRUCTION AND REINFORCING PROPERTIES - III	SP-513
145		TYPICAL NUMBER OF REINFORCING PER LAYER	SP-514
146	GABION	DESIGN AND SPECIAL PROVISION	SP-601
147		MATERIAL SPECIFICATION	SP-602
148		TYPICAL SECTION OF SIDE SLOPE IN DRY CONDITION (BATTER 0 DEGREE)	SP-603
149		TYPICAL SECTION OF SIDE SLOPE IN DRY CONDITION (BATTER 6 DEGREE)	SP-604
150		TYPICAL SECTION OF SIDE SLOPE ADJACENT TO WATERFRONT (BATTER 0 DEGREE)	SP-605
151		TYPICAL SECTION OF SIDE SLOPE ADJACENT TO WATERFRONT (BATTER 6 DEGREE)	SP-606
152		TYPICAL SECTION OF BACK SLOPE (BATTER 0 DEGREE)	SP-607
153		TYPICAL SECTION OF BACK SLOPE (BATTER 6 DEGREE)	SP-608
154	SUBDRAIN	LONGITUDINAL DRAIN	SP-701
155		HORIZONTAL DRAIN	SP-702
SECTION 6) HIGHWAY ENVIRONMENTAL AND HANDICAP WALKWAY			
156	PLANTING	PLANTING TREE AND GRASSING IN MEDIAN	EN-101
157		PLANTING TREE IN MEDIAN, SEPARATOR AND SIDEWALK	EN-102
158		DISTANCE AND HEIGHT OF THE TREE FOR SIGHT DISTANCE	EN-103
159		METHOD OF TRANSPLANTING TREE	EN-104
160		PLANTING TREES IN INTERSECTION	EN-105
161		PLANTING TREES IN INTERCHANGE	EN-106
162	NOISE BARRIER	SPECIFICATION FOR CONSTRUCTION	EN-201
163	BUS STOP LAYOUT	-	EN-301
164	REINFORCED CONCRETE & STEEL BUS STOP SHELTER	TYPE A : SMALL TYPE ON GROUND	EN-302
165		TYPE B : SMALL TYPE ON BEAM	EN-303
166		TYPE C : LARGE TYPE ON GROUND - I	EN-304
167		TYPE C : LARGE TYPE ON GROUND - II	EN-305
168		TYPE D : LARGE TYPE ON BEAM - I	EN-306
169		TYPE D : LARGE TYPE ON BEAM - II	EN-307
170		TYPE E : WALKWAY TYPE - I	EN-308
171		TYPE E : WALKWAY TYPE - II	EN-309
172	WOODEN BUS STOP SHELTER	TYPE A : SMALL TYPE ON GROUND	EN-310
173		TYPE B : SMALL TYPE ON BEAM	EN-311
174		TYPE C : LARGE TYPE ON GROUND - I	EN-312
175		TYPE C : LARGE TYPE ON GROUND - II	EN-313

PART 1 LIST OF DRAWINGS FOR ROAD WORK (CONT.)

SHEET NO.	TITLE		DRAWING NO.
176		TYPE D : LARGE TYPE ON BEAM - I	EN-314
177		TYPE D : LARGE TYPE ON BEAM - II	EN-315
178	DECORATIVE EXTENSION OF THE APEX OF THE GABLE	-	EN-316
179	HANDICAP WALKWAY	RAMP AND WALKWAY AT CORNERS	EN-401
180		RAMP AND WALKWAY AT STRAIGHTS	EN-402
181		RAMP AND WALKWAY AT INTERSECTIONS AND RAISED MEDIAN	EN-403
SECTION 7) ROADWAY LIGHTING			
182	ROADWAY LIGHTING	ELECTRICAL CONNECTION TO MEA'S POWER SUPPLY	EE-101
183		ELECTRICAL CONNECTION TO PEA'S POWER SUPPLY	EE-102
184		GROUNDING SCHEMATIC	EE-103
185		SUPPLY PILLAR DETAILS AND INSTALLATION	EE-104
186		LIGHTING POLE INSTALLATION FOR GROUND LEVEL ROAD	EE-105
187		LIGHTING POLE INSTALLATION FOR ELEVATED ROAD	EE-106
188		HIGH MAST LIGHTING POLE	EE-107
189		PILE FOUNDATION FOR HIGH MAST LIGHTING POLE	EE-108
190		SPREAD FOUNDATION FOR HIGH MAST LIGHTING POLE	EE-109
191		LIGHT INSTALLATION ON EXISTING MEA OR PEA POLE	EE-110
192		SOFFIT LIGHT INSTALLATION	EE-111
193		HANDHOLE FOR ROADWAY LIGHTING	EE-112
194		UNDERGROUND CABLE, CONDUIT AND DUCT BANK DETAILS	EE-113
SECTION 8) ROAD TRAFFIC SIGNAL			
195	ROAD TRAFFIC SIGNALS	TRAFFIC SIGNAL SYMBOLS	TF-101
196		TRAFFIC SIGNAL HEAD DETAILS	TF-102
197		TRAFFIC SIGNAL CONTROLLER AND POLE DETAILS	TF-103
198		TRAFFIC SIGNAL MAST POLE DETAILS	TF-104
199		HANDHOLE FOR TRAFFIC SIGNALS	TF-105

PART 2 LIST OF DRAWINGS FOR STRUCTURAL WORK

SHEET NO.	TITLE		DRAWING NO.
200/R1	STRUCTURAL NOTES	GENERAL NOTES - I	GN-001
201/R1		GENERAL NOTES - II	GN-002
202/R1		GENERAL NOTES - III	GN-003
SECTION 1) BRIDGE SPAN NOT MORE THAN 20.00 M.			
203/R1	R.C. SLAB BRIDGE	0° SKEW, PLAN AND SECTION DETAILS	SB-101
204/R1		1° - 25° SKEW PLAN AND SECTION DETAILS	SB-102
205/R1		26° - 45° SKEW PLAN AND SECTION DETAILS	SB-103
206/R1		TAPERED PLAN AND SECTION DETAILS	SB-104
207/R1		TAPERED PLAN AND SECTION DETAILS, EDGE BEAM REINFORCEMENT	SB-105
208/R1	0° - 45° SKEW PC. PLANK GIRDER BRIDGE	GIRDER DIMENSIONS AND SECTIONS	PG-101
209/R1		GIRDER REINFORCEMENT DETAILS	PG-102
210/R1		STRAND ARRANGEMENT DETAILS (EXTERIOR PLANK)	PG-103
211/R1		STRAND ARRANGEMENT DETAILS (INTERIOR PLANK)	PG-104
212/R1	0° - 45° SKEW PC. BOX BEAM 15.00 M. AND 20.00 M. SPAN	PLANS AND SECTIONS	BB-101
213/R1		REINFORCEMENT DETAILS	BB-102
214		STRAND ARRANGEMENT DETAILS	BB-103
215/R1	0° - 45° SKEW I-GIRDER 15.00 M. SPAN (FULL JOINT)	BRIDGE DECK DIMENSION	IG-101
216/R1		BRIDGE DECK REINFORCEMENT	IG-102
217/R1		GIRDER DIMENSION	IG-103
218/R1		GIRDER PRESTRESSING AND REINFORCEMENT	IG-104
219/R1	0° - 45° SKEW I-GIRDER 20.00 M. SPAN (FULL JOINT)	BRIDGE DECK DIMENSION	IG-201
220		BRIDGE DECK REINFORCEMENT	IG-202
221/R1		BRIDGE DECK DIMENSION (FOR CURVE)	IG-203
222		BRIDGE DECK REINFORCEMENT (FOR CURVE)	IG-204
223/R1		GIRDER DIMENSION	IG-205
224/R1		GIRDER PRESTRESSING AND REINFORCEMENT	IG-206
225/R1	CAP BEAM AND WINGWALL OF ABUTMENT	DIMENSION AND REINFORCEMENT DETAILS	PB-101
226/R1	9.00 M. ROADWAY WIDTH SLAB BRIDGE, 0° SKEW	SPREAD FOOTING PIER DETAIL	PB-201
227/R1		SPREAD FOOTING ABUTMENT DETAIL	PB-202

PART 2 LIST OF DRAWINGS FOR STRUCTURAL WORK (CONT.)

SHEET NO.	TITLE		DRAWING NO.
228/R1		PILE BENT AND ABUTMENT DETAILS	PB-203
229/R1	10.00 M. ROADWAY WIDTH SLAB BRIDGE, 0° SKEW	SPREAD FOOTING PIER DETAIL	PB-204
230/R1		SPREAD FOOTING ABUTMENT DETAIL	PB-205
231/R1		PILE BENT AND ABUTMENT DETAILS	PB-206
232/R1	11.00 M. ROADWAY WIDTH SLAB BRIDGE, 0° SKEW	SPREAD FOOTING PIER DETAIL	PB-207
233/R1		SPREAD FOOTING ABUTMENT DETAIL	PB-208
234/R1		PILE BENT AND ABUTMENT DETAILS	PB-209
235/R1	12.00 M. ROADWAY WIDTH SLAB BRIDGE, 0° SKEW	SPREAD FOOTING PIER DETAIL	PB-210
236/R1		SPREAD FOOTING ABUTMENT DETAIL	PB-211
237/R1		PILE BENT AND ABUTMENT DETAILS	PB-212
238/R1	13.00 M. ROADWAY WIDTH SLAB BRIDGE, 0° SKEW	SPREAD FOOTING PIER DETAIL	PB-213
239/R1		SPREAD FOOTING ABUTMENT DETAIL	PB-214
240/R1		PILE BENT AND ABUTMENT DETAILS	PB-215
241/R1	14.00 M. ROADWAY WIDTH SLAB BRIDGE, 0° SKEW	SPREAD FOOTING PIER DETAIL	PB-216
242/R1		SPREAD FOOTING ABUTMENT DETAIL	PB-217
243/R1		PILE BENT AND ABUTMENT DETAILS	PB-218
244/R1	15.00 M. ROADWAY WIDTH SLAB BRIDGE, 0° SKEW	SPREAD FOOTING PIER DETAIL	PB-219
245/R1		SPREAD FOOTING ABUTMENT DETAIL	PB-220
246/R1		PILE BENT AND ABUTMENT DETAIL	PB-221
247/R1	9.00 – 15.00 M. ROADWAY WIDTH SLAB BRIDGE, 1° – 45° SKEW	SPREAD FOOTING PIER DETAIL	PB-301
248/R1		SPREAD FOOTING ABUTMENT DETAIL	PB-302
249/R1		PILE BENT AND ABUTMENT DETAILS	PB-303
250/R1		WALL BRACING FOR SPREAD FOOTING PIER DETAIL	PB-304
251/R1		WALL BRACING FOR PILE BENT DETAIL	PB-305
252/R1		WALL BRACING PIER ON BED ROCK DETAIL	PB-306
253/R1		PIER ON BED ROCK DETAIL	PB-307
254/R1		ABUTMENT ON BED ROCK DETAIL	PB-308
255/R1	ABUTMENT 12.00 M. SPAN (MAX), 4.00 M. < HEIGHT ≤ 5.50 M.	PILE FOOTING DETAILS	PB-309
256/R1		SPREAD FOOTING DETAILS	PB-310
257	TYPICAL DETAILS FOR PIER AND FOOTING	SKEW FOOTING FOR SINGLE COLUMN PIER	PC-101
258		PILE PATTERN FOR SINGLE COLUMN PIER	PC-102
259		PILE PATTERN FOR MULTI COLUMN PIERS	PC-103
260		PRECAST SKIRTING	PC-104
261/R1	SINGLE COLUMN PIER WITHOUT SIDEWALK (FOR I GIRDER)	ROADWAY WIDTH 9.00 – 12.00 M. , 15.00 M. AND 20.00 M. SPAN , HEIGHT ≤ 8.00 M.	PC-201
262		ROADWAY WIDTH 13.00 – 15.00 M. , 15.00 M. AND 20.00 M. SPAN , HEIGHT ≤ 8.00 M.	PC-202
263		ROADWAY WIDTH 9.00 – 15.00 M. , 15.00 M. SPAN , 8.00 M. < HEIGHT ≤ 15.00 M.	PC-203
264		ROADWAY WIDTH 9.00 – 15.00 M. , 20.00 M. SPAN , 8.00 M. < HEIGHT ≤ 15.00 M.	PC-204
265	TWO COLUMNS PIER WITHOUT SIDEWALK (FOR I GIRDER)	ROADWAY WIDTH 9.00 – 12.00 M. , 15.00 M. SPAN , HEIGHT ≤ 15.00 M.	PC-205
266		ROADWAY WIDTH 9.00 – 12.00 M. , 20.00 M. SPAN , HEIGHT ≤ 15.00 M.	PC-206
267	THREE COLUMNS PIER WITHOUT SIDEWALK (FOR I GIRDER)	ROADWAY WIDTH 13.00 – 15.00 M. , 15.00 M. SPAN , HEIGHT ≤ 15.00 M.	PC-207
268/R1		ROADWAY WIDTH 13.00 – 15.00 M. , 20.00 M. SPAN , HEIGHT ≤ 15.00 M.	PC-208
269/R1	ABUTMENT WITHOUT SIDEWALK (FOR I GIRDER)	ROADWAY WIDTH 9.00 – 15.00 M. , 15.00 M. AND 20.00 M. SPAN , HEIGHT ≤ 5.50 M.	PC-209
270/R1	SINGLE COLUMN PIER WITH SIDEWALK (FOR I GIRDER)	ROADWAY WIDTH 9.00 – 11.00 M. , 15.00 M. AND 20.00 M. SPAN , HEIGHT ≤ 8.00 M.	PC-210
271/R1		ROADWAY WIDTH 12.00 – 15.00 M. , 15.00 M. AND 20.00 M. SPAN , HEIGHT ≤ 8.00 M.	PC-211
272		ROADWAY WIDTH 9.00 – 15.00 M. , 15.00 M. SPAN , 8.00 M. < HEIGHT ≤ 15.00 M.	PC-212
273		ROADWAY WIDTH 9.00 – 15.00 M. , 20.00 M. SPAN , 8.00 M. < HEIGHT ≤ 15.00 M.	PC-213
274	TWO COLUMNS PIER WITH SIDEWALK (FOR I GIRDER)	ROADWAY WIDTH 9.00 – 15.00 M. , 15.00 M. SPAN , 8.00 M. < HEIGHT ≤ 15.00 M.	PC-214
275		ROADWAY WIDTH 9.00 – 15.00 M. , 20.00 M. SPAN , 8.00 M. < HEIGHT ≤ 15.00 M.	PC-215
276	THREE COLUMNS PIER WITH SIDEWALK (FOR I GIRDER)	ROADWAY WIDTH 13.00 – 15.00 M. , 15.00 M. SPAN , HEIGHT ≤ 15.00 M.	PC-216
277		ROADWAY WIDTH 13.00 – 15.00 M. , 20.00 M. SPAN , HEIGHT ≤ 15.00 M.	PC-217
278/R1	ABUTMENT WITH SIDEWALK (FOR I GIRDER)	ROADWAY WIDTH 9.00 – 15.00 M. , 15.00 M. AND 20.00 M. SPAN , HEIGHT ≤ 5.50 M.	PC-218
279	SINGLE COLUMN PIER WITHOUT SIDEWALK (FOR BOX BEAM)	ROADWAY WIDTH 9.00 – 15.00 M. , 15.00 M. SPAN , 8.00 M. < HEIGHT ≤ 15.00 M.	PC-219
280		ROADWAY WIDTH 9.00 – 15.00 M. , 20.00 M. SPAN , 8.00 M. < HEIGHT ≤ 15.00 M.	PC-220
281	TWO COLUMNS PIER WITHOUT SIDEWALK (FOR BOX BEAM)	ROADWAY WIDTH 9.00 – 12.00 M. , 15.00 M. AND 20.00 M. SPAN , HEIGHT ≤ 15.00 M.	PC-221
282/R1	THREE COLUMNS PIER WITHOUT SIDEWALK (FOR BOX BEAM)	ROADWAY WIDTH 13.00 – 15.00 M. , 15.00 M. AND 20.00 M. SPAN , HEIGHT ≤ 15.00 M.	PC-222
283/R1	ABUTMENT WITHOUT SIDEWALK (FOR BOX BEAM)	ROADWAY WIDTH 9.00 – 15.00 M. , 15.00 M. AND 20.00 M. SPAN , HEIGHT ≤ 5.50 M.	PC-223
284/R1	SINGLE COLUMN PIER WITH SIDEWALK (FOR BOX BEAM)	ROADWAY WIDTH 9.00 – 15.00 M. , 15.00 M. SPAN , 8.00 M. < HEIGHT ≤ 15.00 M.	PC-224
285/R1		ROADWAY WIDTH 9.00 – 15.00 M. , 20.00 M. SPAN , 8.00 M. < HEIGHT ≤ 15.00 M.	PC-225
286/R1	TWO COLUMNS PIER WITH SIDEWALK (FOR BOX BEAM)	ROADWAY WIDTH 9.00 – 12.00 M. , 15.00 M. AND 20.00 M. SPAN , HEIGHT ≤ 15.00 M.	PC-226
287	THREE COLUMNS PIER WITH SIDEWALK (FOR BOX BEAM)	ROADWAY WIDTH 13.00 – 15.00 M. , 15.00 M. AND 20.00 M. SPAN , HEIGHT ≤ 15.00 M.	PC-227

PART 2 LIST OF DRAWINGS FOR STRUCTURAL WORK (CONT.)

SHEET NO.	TITLE		DRAWING NO.
288/R1	ABUTMENT WITH SIDEWALK (FOR BOX BEAM)	ROADWAY WIDTH 9.00 – 15.00 M. , 15.00 M. AND 20.00 M. SPAN , HEIGHT ≤ 5.50 M.	PC-228
SECTION 2) BRIDGE ACCESSORIES			
289/R1	TRAFFIC AND PEDESTRIAN BARRIERS	REINFORCEMENT DETAILS	BR-101
290		PRECAST FIN AND RAILING DETAILS	BR-102
291	BRIDGE SIGN	SPECIAL BRIDGE NAME SIGN	SN-201
292		GENERAL BRIDGE NAME SIGN	SN-202
293		BRIDGE INFORMATION SIGN & BENCH MARK	SN-203
294	BRIDGE APPROACH SLAB	0° – 25° SKEW REINFORCEMENT AND POROUS BACKFILL DETAILS	AP-101
295		26° – 45° SKEW REINFORCEMENT AND POROUS BACKFILL DETAILS	AP-102
296	0° – 45° SKEW BEARING UNIT	PILE ARRANGEMENT, SECTION AND DETAILS	BU-101
297/R1		REINFORCEMENT AND DETAILS	BU-102
298		PILE ARRANGEMENT AND DETAILS	BU-103
299		R.C. RETAINGWALL DETAILS	BU-104
300	ELASTOMERIC BEARING PAD	INSTALLATION OF ELASTOMERIC BEARING PAD AND BUFFER, FULL JOINT DETAILS	BP-101
301		NATURAL RUBBER SPECIFICATIONS	BP-102
302		CHLOROPRENE (NEOPRENE) RUBBER SPECIFICATIONS	BP-103
303	EXPANSION JOINT	SPECIFICATIONS	EJ-101
304		CONCRETE BRIDGE SURFACE	EJ-102
305		ASPHALT BRIDGE SURFACE	EJ-103
306/R1	PILES SPECIFICATIONS	–	PL-001
307	R.C. PILES	0.40 x 0.40 M. PILE CAPACITY AND REINFORCEMENT DETAILS	PL-101
308		0.525 x 0.525 M. PILE CAPACITY AND REINFORCEMENT DETAILS	PL-102
309		0.65 x 0.65 M. PILE CAPACITY AND REINFORCEMENT DETAILS	PL-103
310	PC. PILES	0.40 x 0.40 M. PILE CAPACITY AND REINFORCEMENT DETAILS	PL-201
311		0.525 x 0.525 M. PILE CAPACITY AND REINFORCEMENT DETAILS	PL-202
312		0.65 x 0.65 M. PILE CAPACITY AND REINFORCEMENT DETAILS	PL-203
313	SPUN PILES	0.50 M. PILE CAPACITY AND REINFORCEMENT DETAILS	PL-301
314		0.60 M. PILE CAPACITY AND REINFORCEMENT DETAILS	PL-302
315		0.80 M. PILE CAPACITY AND REINFORCEMENT DETAILS	PL-303
316		1.00 M. PILE CAPACITY AND REINFORCEMENT DETAILS	PL-304
SECTION 3) REINFORCED CONCRETE BOX CULVERT			
317	CAST-IN-SITU BOX CULVERT	RIGID FRAME R.C. BOX CULVERT, PLAN ELEVATION AND SECTIONS	BC-101
318		RIGID FRAME R.C. BOX CULVERT, TABLE OF REINFORCEMENT	BC-102
319		SIMPLE SPAN R.C. BOX CULVERT, PLAN ELEVATION AND SECTION	BC-103
320	R.C. HEADWALL FOR BOX CULVERT	DIMENSION REINFORCEMENT AND DETAILS	BC-104
321	PRECAST BOX CULVERT	FILL DEPTH ≤ 0.60 M. PLAN, ELEVATION AND SECTION	BC-105
322		FILL DEPTH ≤ 0.60 M. REINFORCEMENT DETAIL	BC-106
323		FILL DEPTH > 0.60 M. PLAN, ELEVATION AND SECTION	BC-107
324		FILL DEPTH > 0.60 M. REINFORCEMENT DETAIL	BC-108
325	R.C. BOX CULVERT EXTENSIONS	CONNECTION DETAIL	BC-109
SECTION 4) RETAINING WALL			
326	RETAINING WALL	TYPE 1 AND 2	RT-101
327		TYPE 3A	RT-102
328		TYPE 3B	RT-103
329		TYPE 3B , PILE DETAILS	RT-104
330		TYPE 4	RT-105
331		TYPE 5 (H ≤ 3.00 M.)	RT-106
332		TYPE 5 (3.00 < H ≤ 6.00 M.)	RT-107
333		TYPE 5 , PILE DETAILS	RT-108

PART 1

STANDARD DRAWINGS FOR ROAD WORK

ABBREVIATIONS AND SYMBOLS

ABBREVIATIONS

A	AREA	MM.	MILLLIMETER
AASHTO	AMERICAN ASSOCIATION OF STATE	$MM.^2$ OR SQ.MM.	SQUARE MILLIMETER
	HIGHWAY AND TRANSPORTATION OFFICIALS	M.O.	MIDDLE ORDINATE
AC	ASPHALTIC CONCRETE	MONT.	MONUMENT
ADT.	AVERAGE DAILY TRAFFIC	M.S.L.	MEAN SEA LEVEL
AGG.	AGGREGATE	N.	NORTH
AH.	AHEAD	N/B	NORTH BOUND
AISC.	AMERICAN INSTITUTE STEEL OF CONSTRUCTION	NC	NORMAL CROWN
ALT.	ALTERNATIVE	NIC	NOT INCLUDE IS THIS CONTRACT
APPROX.	APPROXIMATE	NO.	NUMBER
ASTM	AMERICAN SOCIETY FOR TESTING	O.D.	OUTSIDE DIAMETER
	AND MATERIALS	OUTL.	OUTLET
AVG.	AVERAGE	PBM.	PERMANENT BENCH MARK
BIT.	BITUMINOUS	PC.	POINT OF CURVE OR PRESTRESSED
BK.	BACK		CONCRETE
BM.	BENCH MARK	PCC.	POINT OF COMPOUND CURVE
BOTT.	BOTTOM	PEA.	PROVINCIAL–ELECTRICITY AUTHORITY
BRDG.	BRIDGE	PG	PROFILE GRADE
BRG.	BEARING	PG. LINE	PROFILE GRADE LINE
BT.	BACK TANGENT	P.I.	POINT OF HORIZONTAL INTERSECTION
C.B.R.	CALIFORNIA BEARING RATIO	PL.	PLATE OR PIPE LINE
C/C(OR C TO C)	CENTER TO CENTER	POC.	POINT ON CURVE
CL.	CLEARANCE	POST.	POINT ON SUBTANGENT
CM.	CENTIMETER	POT.	POINT ON TANGENT
$CM.^2$ OR SQ.CM.	SQUARE CENTIMETER	PRC.	POINT OF REVERSE CURVE
C.M.P.	CORRUGATED METAL PIPE	PROJ.	PROJECT
COL.	COLUMN	PT.	POINT OF TANGENT
CONC.	CONCRETE	P.V.C.	POLY VINYL CHLORIDE
CONSTR.	CONSTRUCTION	PVCC.	POINT OF VERTICAL COMPOUND CURVE
C.P.	CONCRETE PIPE	PVI.	POINT OF VERTICAL INTERSECTION
CS.	CIRCLE TO SPIRAL	PVRC.	POINT OF VERTICAL REVERSE CURVE
C/W	CARRIAGEWAY	PVC.	POINT OF VERTICAL CURVE
CU.M.	CUBIC METER	PVT.	POINT OF VERTICAL TANGENT
D.	DEGREE OF CURVE	R.	RADIUS OF CURVE
DB.	DEFORMED BAR	RB.	ROUND BAR
D.B.S.T.	DOUBLE BITUMINOUS SURFACE TREATMENT	R.C.	REINFORCEMENT CONCRETE
DEG.	DEGREE	RC.	REMOVED ADVERSE CROWN
DIA.	DIAMETER	RCB.	REINFORCED CONCRETE BOX CULVERT
D.O.H.	DEPARTMENT OF HIGHWAYS	RCP.	REINFORCED CONCRETE PIPE CULVERT
DWG.	DRAWING	RD.	ROAD
E	EXTERNAL DISTANCE OF SIMPLE	RE.	RESIDENT ENGINEER
	CURVE OR EAST	REF.	REFERENCE
EA.	EACH	REINF.	REINFORCEMENT
EB.	EAST BOUND	REQ'D	REQUIRED
EL.(OR ELEV.)	ELEVATION	R.I.D.	ROYAL IRRIGATION DEPARTMENT
ENGR.	ENGINEER	RP.	REFERENCE POINT
EQ.(OR =)	EQUATION OR EQUAL	RT.	RIGHT
EQUIV.	EQUIVALENT	R/W OR R.O.W.	RIGHT OF WAY
ES.	EDGE OF SHOULDER	S	SOUTH
EXIST.	EXISTING	SB.	SOUTH BOUND
EXP.	EXPANSION	SBST.	SINGLE BITUMINOUS SURFACE
E/B.	EAST BOUND		TREATMENT
FTG.	FOOTING	SC.	SPIRAL TO CIRCLE
GM.	GRAM	SE.	SUPERELEVATION
G.	GRADE	SEC.(OR Sec.)	SECANT
GL.	GROUND LEVEL	SHLDR.	SHOULDER
H. & N.	HUB AND RED NAIL	SP.	SPAN
HC.	HALF CROWN	SPG.	SPACING
HDPE.	HIGH DENSITY POLYETHYLENE	SR.	SIDE ROAD
HDWL.	HEADWALL	S.R.T.	STATE RAILWAYS OF THAILAND
HOR.	HORIZONTAL	ST.	SPIRAL TO TANGENT
HPS.	HIGH PRESSURE SODIUM LAMP	STA.	STATION
HWL	HIGH WATER LEVEL	STD.	STANDARD
HWY.	HIGHWAY	STR.	STRAIGHT
I.D.	INSIDE DIAMETER	SYMM.	SYMMETRY OR SYMMETRICAL
IN.	INCH	S/B.	SOUTH BOUND
INL.	INLET	T.	TANGENT LENGHT, TON
INV.	INVERT	THK.	THICKNESS
JT.	JOINT	TIS.	THIA INDUSTRIAL STANDARD
KG.	KILOGRAM	TS.	TANGENT TO SPIRAL
KM.	KILOMETER	TYP.	TYPICAL
KPH.	KILOMETER PER HOUR	V.	VELOCITY
KSC.	KILOGRAM PER SQUARE CENTIMETER	VOL.	VOLUMN
L.	LENGTH OF HORIZONTAL CURVE OR LENGTH	W.	WIDENING OR WEST OR WIDTH
LAT.	LATERITE	W/B.	WEST BOUND
LEV.	LEVEL	W/	WITH
LG.	LIGHT GAGE STEEL	W/O	WITHOUT
L.M.	LINEAR METER	WT	WEIGHT
LPS.	LOW PRESSURE SODIUM LAMP	X SECT.	CROSS SECTION
Ls.	SUPERELEVATION TRANSITION LENGTH	℄	CENTERLINE
L.S.	LUMP SUM	ℙ	PROPERTY LINE
LT.	LEFT	ℒ	SPUR LINE OR SURVEY LINE
L.V.C.	LENGTH OF VERTICAL CURVE	%	PERCENT
L.W.L.	LOW WATER LEVEL	&	AND
M.	METER	@	SPACING
$M.^2$ OR SQ.M.	SQUARE METER	"	INCH
$M.^3$ OR CU.M.	CUBIC METER	ø OR DIA	DIAMETER OR DIA
MAG. AZ	MAGNETIC AZIMUTH	△	TOTAL DEFLECTION ANGLE AT ANY P.I.
MAX.	MAXIMUM		
M.H.	MANHOLE		
MIN.	MINIMUM		
MISC.	MISCELLANEOUS		

SYMBOLS

CONST. ℄	CENTER LINE OF CONSTRUCTION		PUBLIC TELEPHONE BOX
SURVEY ℄	CENTER OF SURVEY LINE		MAIL BOX
EXIST. R/W	EXISTING RIGHT OF WAY LINE	MH	MANHOLE
PROPOSED R/W	PROPOSED RIGHT OF WAY LINE		TRAFFIC SIGNAL
ℙ	PROPERTY LINE		FIRE HYDRANT
	EDGE OF NEW PAVEMENT		EXISTING PIPE CULVERT (WITH OR WITHOUT HEADWALL)
	EDGE OF EXISTING PAVEMENT		NEW PIPE CULVERT (WITH OR WITHOUT HEADWALL)
	PROPOSED ROAD		EXISTING BOX CULVERT
	EXISTING ROAD		NEW BOX CULVERT
	EXISTING SHOULDER LINE		EXISTING HIGHWAY GUARDRAIL
	NEW SHOULDER LINE		NEW HIGHWAY GUARDRAIL
	EXISTING CURB		RAIL ROAD CROSSING SIGN
	NEW CURB		RAIL ROAD CROSSING SIGNAL LIGHT
	GROUND PROFILE		RAIL ROAD CROSSING GATE
	EXISTING ROAD PROFILE		GASOLINE STATION
	BACKFILLING EXISTING CHANNELS	350	INDEX CONTOUR
	EXISTING INLETS		INTERMEDIATE CONTOUR
	EXISTING PIPE		WOODEN OR BARBED WIRE FENCE
	EXISTING DITCH		BRIDGE,ROAD OVER STREAM
	PARALLEL DITCH		RAIL ROAD SINGLE TRUCK
	PIPES		KHLONG OR RIVER
	PIPE & INLET		DITCH , WATERWAY
W V W	WATER & WATER VALVE		FLOW DIRECTION
T MH T	TELEPHONE & MANHOLE		SWAMP AREA
E HH E	ELECTRICITY & HANDHOLE		BILLBOARD,SINGLE FACE
G V G	GAS PIPE & GAS VALVE		BILLBOARD,DOUBLE FACE
PT PT	POWER TRANSMISSION LINE WITH STEEL TOWER		TRAFFIC SIGN
	WOODEN ELECTRIC POLE		GUIDE POST
	CONCRETE ELECTRIC POLE OR TELEPHONE POLE	HWL	HIGH WATER LEVEL
	INDIVIDUAL TREES		KILOMETER STONE (EXISTING,PROPOSED)
	HEDGES		R/W MONUMENT (EXISTING,PROPOSED)
	BUS STOP SHELTER	H	TEMPORARY SHELTER, HUT
	TELEPHONE JUNCTION	1–S–W	BUILDING, ONE – STOREY WOODEN FRAME
		2–S–W	BUILDING, TWO – STOREY WOODEN FRAME
		1–S–C	BUILDING, ONE – STOREY CONCRETE
		2–S–C	BUILDING, TWO – STOREY CONCRETE
		1–S–W (10)	COMMERCIAL BUILDING, ONE–STOREY WOODEN FRAME, 10 UNITS
		2–S–W (10)	COMMERCIAL BUILDING, TWO–STOREY WOODEN FRAME, 10 UNITS
		1–S–C (10)	COMMERCIAL BUILDING, ONE–STOREY CONCRETE STRUCTURE, 10 UNITS
		2–S–C (10)	COMMERCIAL BUILDING, TWO–STOREY CONCRETE STRUCTURE, 10 UNITS
			SCHOOL BUILDING
			TEMPLE
			CHURCH
			MASJID, MOSQUE
			AMPHOE, DISTRICT
			SUB–DISTRICT
			PROVINCE
			RAILWAY
			SLOPE
			BENCH MARK
			PERMANENT BENCH MARK (P.B.M.)
			POINT OF HORIZONTAL OR VERTICAL INTERSECTION

REF.	REVISION	SIGNATURE	DATE

KINGDOM OF THAILAND

MINISTRY OF TRANSPORT

DEPARTMENT OF HIGHWAYS

STANDARD DRAWING

ABBREVIATION AND SYMBOLS

DESIGNED : D.O.H. & CONSULTANTS	**CHECKED :** BUREAU OF LOCATION & DESIGN	**DATE :** OCT 2015
SUBMITTED : (DIRECTOR OF LOCATION & DESIGN BUREAU)		**SCALE :** AS SHOWN
APPROVED : (FOR DIRECTOR GENERAL)		**DWG NO.** AS–001
		SHEET NO. 1

D:\std dwg 2015\AS-001(REV00)

SECTION 1) TYPICAL CROSS SECTIONS

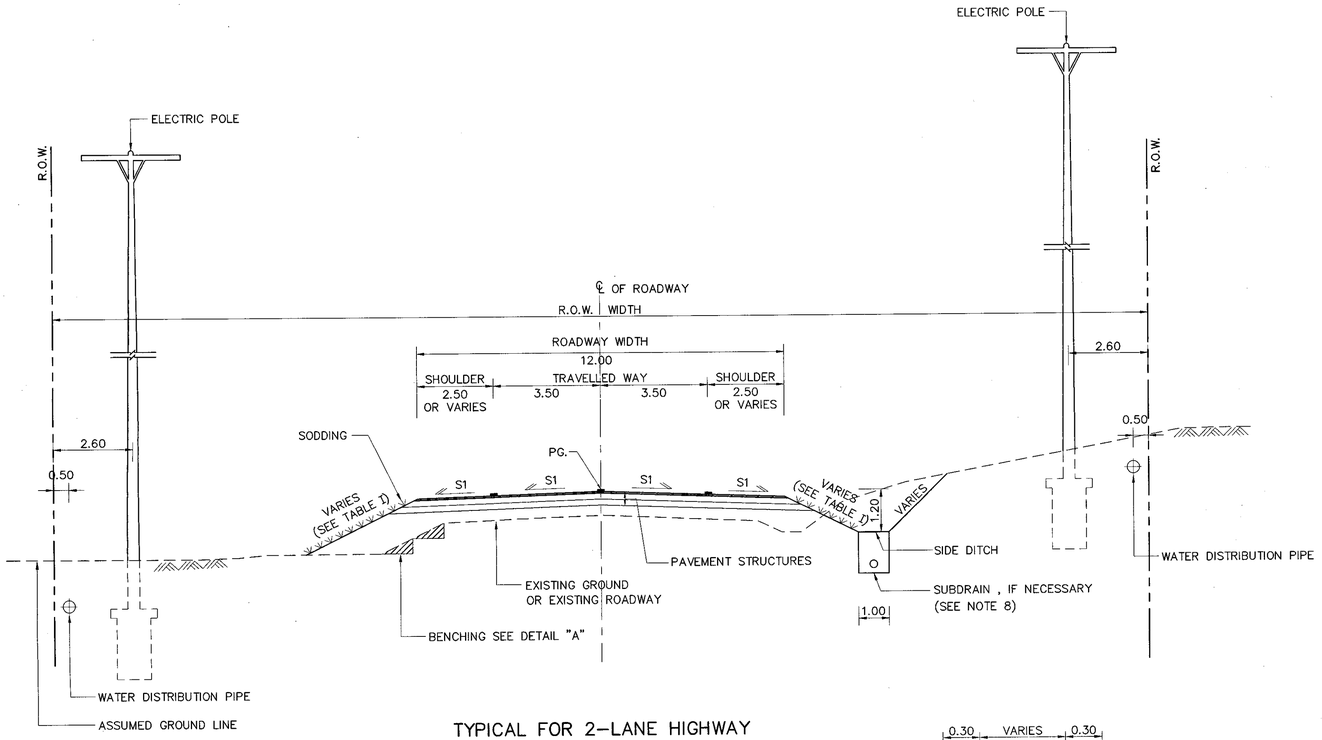

TYPICAL FOR 2–LANE HIGHWAY

SCALE 1 : 100

NOTES:

1. ALL DIMENSIONS ARE IN METERS UNLESS OTHERWISE INDICATED
2. THE NUMBERS OF THE BENCHING DEPEND ON THE HEIGHT OF THE EXISTING EMBANKMENT. OR EXISTING GROUND LEVEL.
3. PORTION "A" SHALL DIRECTED BY THE ENGINEER.
4. PORTION "B" SHALL BE WIDEN ENOUGH FOR COMPACTION BY COMPACTION EQUIPMENT.
5. THE CORRECTIVE MEASURE OF SOFT SPOT ON THE EXISTING ROADWAY MUST BE DONE BEFORE THE CONSTRUCTION OF THE NEW OVERLAYING PAVEMENT, THE SOFT SPOT SHALL BE OBSERVED BY THE MOVEMENT OF THE EXISTING SURFACE WHEN USING COMPACTOR UNIT WEIGHTING AT LEAST 6 METRIC TONS RUNS OVER ALONG THE SECTION.
6. THE BENCHING CUT FOR EXTENDING THE NEW ROADWAY SHALL BE DONE FROM THE EDGE OF THE EXISTING ROADWAY, WHILE THE NEW FILL MATERAIL SHALL BE APPLIED AS SOON AS POSSIBLE TO PREVENT CRACKING OF THE BENCHING.
7. SIDE BORROW ARE NOT ALLOWED.
8. BEFORE CONSTRUCTING PAVEMENT STRUCTURE, IF GROUND WATER SEEPAGE APPEARS ON CUT SLOPE AND SEEMS TO CAUSE DAMAGE TO THE ROADWAY, THE SUBDRAIN AS SHOWN ON THE DRAWING SHALL BE APPLIED.
9. THIS DRAWING IS GUIDANCE ONLY. THE DIMENSION AND LOCATION OF UTILITIES MAY BE ADJUSTED TO SUIT FOR THE FIELD CONDITION OR PARTICULAR PURPOSE.
10. IF HEIGHT OF FILL OR CUT MORE THAN 5 METERS FROM EXISTING GROUND ; THIS DRAWING SHALL BE USED IN COMBINATION WITH STD. DWG. NO. TS–401.
11. FILL AND CUT SLOPE CONSTRUCTION IN VARIOUS HEIGHT ACCORDING TO TABLE I IS GUIDANCE ONLY, IT SHOULD BE CONFIRMED WITH SPECIFIC INFORMATION ON SOIL AND GEOLOGY PARAMETERS IN THE FIELD. FURTHERMORE,THE SLOPE STABILITY ANALYSIS SHALL BE RECOMMENDED BY THE ENGINEER.
12. THE LOCATION OF THE PROPOSED 2–LANE ROADWAY SHALL BE CONSIDERED AS THE FIRST STAGE OF CONSTRUCTION WHICH HAS TO BE CONFORMED TO FUTURE STAGE FOR ADDITIONAL HIGHWAY WIDENING
13. THE PAVEMENT STRUCTURE AND OTHER DETAILS WHICH ARE NOT SPECIFIED IN THIS DRAWING SHALL BE REFERED TO THE TYPICAL CROSS–SECTION DESIGN DRAWINGS.
14. THE GENERAL SPECIFICATIONS FOR PAVEMENT CONSTRUCTION MATERIAL ARE SHOWN ON THE TABLE II.
15. S1 = NORMAL CROSS SLOPE AS SHOWN ON THE TYPICAL–CROSS SECTION.
16. THE INVERT OF SIDE DITCH SHALL BE LOWER THAN THE PROFILE GRADE TO 1.20 M. MOREOVER, THESE INVERT ELEVATION MAY BE ADJUSTED IN THE FIELD TO SUIT FOR ACTUAL SUCCESSIVE FLOW.
17. THE ELEMENT OF TYPICAL SECTION SHALL BE ADJUSTED AND CONSIDERED FOR OTHER FUNCTIONS REQUIRED AS DIRECTED BY THE ENGINEER

TABLE II : SPECIFICATIONS FOR PAVEMENT CONSTRUCTION MATERIALS

ITEM	SPECIFICATIONS
SUBGRADE	REFER TO STANDARD SPECIFICATIONS FOR HIGHWAY CONSTRUCTION UNDER THE EMBANKMENT AND ROADWAY EXCAVATION SECTION AND STANDARD DH–S 102/2532.
SELECTED MATERIAL "A"	REFER TO STANDARD SPECIFICATIONS FOR HIGHWAY CONSTRUCTION UNDER THE EMBANKMENT SECTION AND STANDARD DH–S 208/2532.
SELECTED MATERIAL "B"	REFER TO STANDARD SPECIFICATIONS FOR HIGHWAY CONSTRUCTION UNDER THE EMBANKMENT SECTION AND DH–S 209/2532.
SUBBASE	REFER TO STANDARD SPECIFICATIONS FOR HIGHWAY CONSTRUCTION UNDER THE SUBBASE SECTION AND DH–S 205/2532.
BASE	REFER TO STANDARD SPECIFICATIONS FOR HIGHWAY CONSTRUCTION UNDER THE AGGREGATE BASE SECTION AND STANDARD DH–S 201/2544
ASPHALT PRIME COAT	REFER TO STANDARD SPECIFICATIONS FOR HIGHWAY CONSTRUCTION UNDER THE ASPHALT PRIME COAT SECTION AND STANDARD DH–S 402/2533.
ASPHALT TACK COAT	REFER TO STANDARD SPECIFICATIONS FOR HIGHWAY CONSTRUCTION UNDER THE ASPHALT TACK COAT SECTION AND STANDARD DH–S 403/2533
DOUBLE SURFACE TREATMENT	REFER TO STANDARD SPECIFICATIONS FOR HIGHWAY CONSTRUCTION UNDER THE SURFACE TREATMENT SECTION AND STANDARD DH–S 401/2533.
ASPHALTIC CONCRETE BINDER COURSE	REFER TO STANDARD SPECIFICATIONS FOR HIGHWAY CONSTRUCTION UNDER THE ASPHALT CONCRETE SECTION AND STANDARD DH–S 408/2532.
ASPHALTIC CONCRETE WEARING COURSE	
SAND CUSHION	REFER TO STANDARD SPECIFICATIONS FOR HIGHWAY CONSTRUCTION UNDER THE SUBBASE SECTION AND STANDARD DH–S 211/2533.
CONCRETE PAVEMENT	REFER TO STANDARD SPECIFICATIONS FOR HIGHWAY CONSTRUCTION UNDER THE PORTLAND CEMENT CONCRETE PAVEMENT SECTION AND STANDARD DH–S 309/2544.

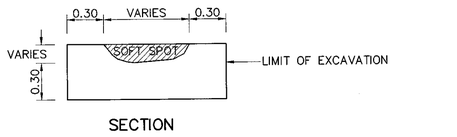

PLAN

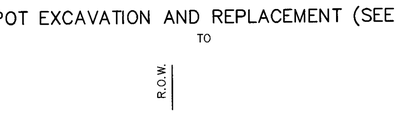

SECTION

TABLE I : GENERAL RECOMMENDATION FOR FILL OR CUT SLOPE CONSTRUCTION

HEIGHT OF FILL OR CUT (M.)	FILL SLOPE EARTH	CUT SLOPE			REMARK
		EARTH	SOFT ROCK	HARD ROCK	
0.00 – 3.00	2 : 1	1 : 1	0.50 : 1	0.25 : 1	THE SLOPE RATIO AS SHOWN IN THIS TABLE IS THE PROPORTION OF HORIZONTAL DISTANCE TO VERTICAL DISTANCE.
3.01 – 5.00	1.5 : 1				
> 5.00	SEE TYPICAL CROSS SECTION FOR DEEP CUT AND HIGH FILL (DWG. NO. TS–401)				

SOFT SPOT EXCAVATION AND REPLACEMENT (SEE NOTE 5)

NOT TO SCALE

DETAIL "A" – ROADWAY BENCHING (SEE NOTE 2–4)

NOT TO SCALE

REF.	REVISION	SIGNATURE	DATE

KINGDOM OF THAILAND
MINISTRY OF TRANSPORT
DEPARTMENT OF HIGHWAYS
STANDARD DRAWING

TYPICAL CROSS–SECTION FOR 2–LANE HIGHWAY

DESIGNED : D.O.H. & CONSULTANTS	CHECKED : BUREAU OF LOCATION & DESIGN	DATE : OCT 2015
SUBMITTED : (DIRECTOR OF LOCATION & DESIGN BUREAU)		SCALE : AS SHOWN
APPROVED : (FOR DIRECTOR GENERAL)		DWG NO. TS–101
		SHEET NO. 2

D:\std dwg 2015\TS-101(REV00)

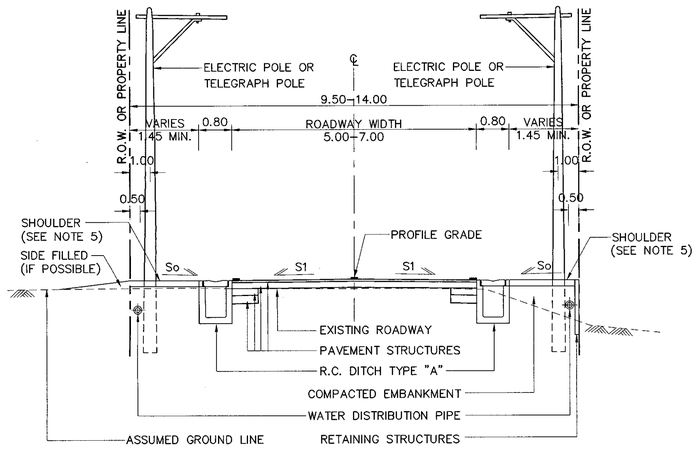

FIGURE I : TYPICAL CROSS–SECTION FOR R.O.W. 9.50 M. MIN. (ALTERNATIVE I)
SCALE 1 : 75 (LIGHTLY TO MEDIUM POPULATED AREA)

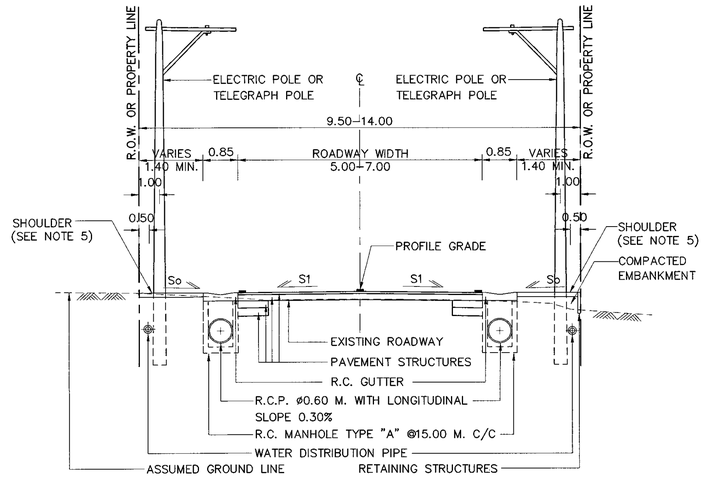

FIGURE II : TYPICAL CROSS–SECTION FOR R.O.W. 9.50 M. MIN. (ALTERNATIVE II)
SCALE 1 : 75 (LIGHTLY TO MEDIUM POPULATED AREA)

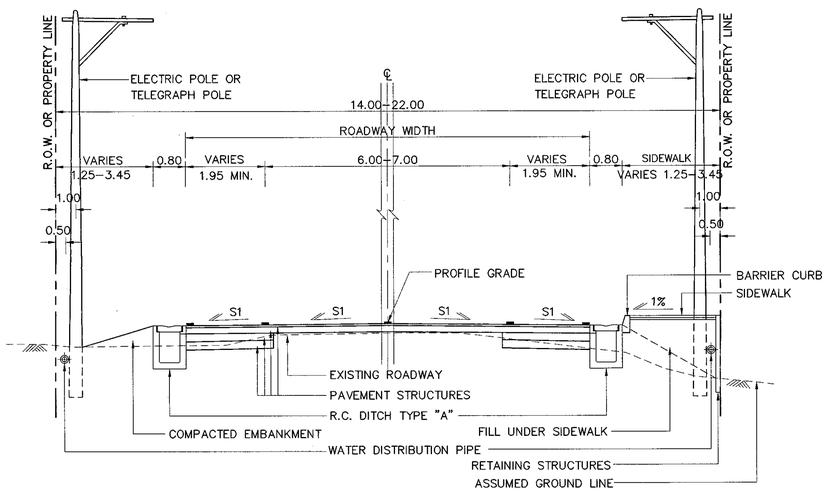

FIGURE III : TYPICAL CROSS–SECTION FOR R.O.W. 14.00 M. MIN. (ALTERNATIVE I)
SCALE 1 : 75 (LIGHTLY TO MEDIUM POPULATED AREA)

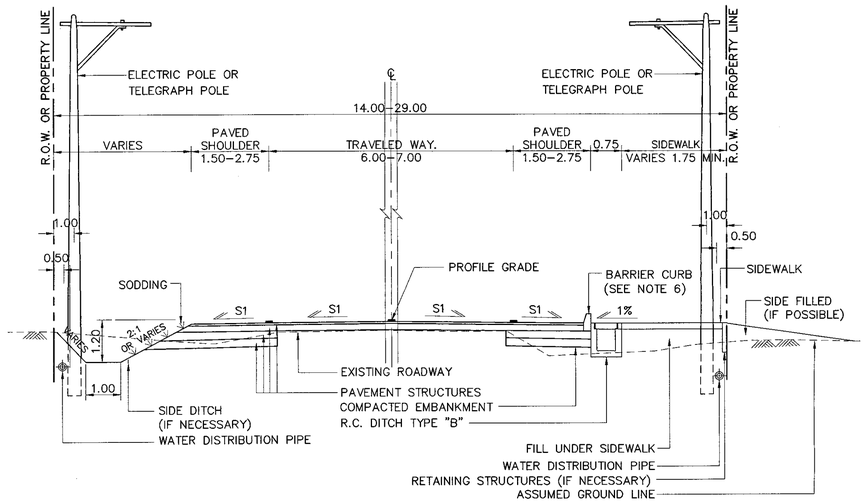

FIGURE IV : TYPICAL CROSS–SECTION FOR R.O.W. 14.00 M. MIN. (ALTERNATIVE II)
SCALE 1 : 75 (LIGHTLY TO MEDIUM POPULATED AREA)

NOTES:

1. DIMENSIONS ARE IN METERS UNLESS OTHERWISE INDICATED.
2. S1 = NORMAL CROSS SLOPE, AS SHOWN ON TYPICAL CROSS–SECTION
   So = 1.5 % IN CASE OF R.C. PAVED SHOULDER
   = 2.5 % IN CASE OF AC PAVED SHOULDER
   = 5 % IN CASE OF SOIL AGGREGATE SHOULDER
3. THE POSITION OF WATER DISTRIBUTION PIPE OR THE OTHER UTILITIES SHALL BE ADJUSTED IN THE FIELD AS DIRECTED BY THE ENGINEER.
4. THE LONGITUDINAL DRAINAGE STRUCTURE AS SHOWN ON THIS DRAWING IS GUIDANCE ONLY. FOR DRAINAGE REQUIREMENT SUITABILITY, THESE DRAINAGE STRUCTURE SHALL BE RESIZED OR SUBSTITUTED WITH THE OTHER DRAINAGE STRUCTURE AS DIRECTED BY THE ENGINEER,
5. THE PAVEMENT STRUCTURE OF THE ROADWAY SHALL BE SPECIFIED AS DESIGNED FOR EACH PROJECT.
6. THE BARRIER CURB SHALL BE INSTALLED ALONG OUTSIDE EDGE OF THE ROADWAY AND OMITTED 0.50 M. IN LENGTH FOR ROADWAY DRAIN OPENING AT INTERVALS OF 10.00 M. IN LENGTH.
7. THE INVERT OF SIDE DITCH SHALL BE LOWER THAN THE PROFILE GRADE TO 1.20 M. MOREOVER, THESE INVERT ELEVATION MAY BE ADJUSTED IN THE FIELD TO SUIT FOR ACTUAL SUCCESSIVE FLOW.
8. THE ELEMENT OF TYPICAL SECTION SHALL BE ADJUSTED AND CONSIDERED FOR OTHER FUNCTIONS IN TERM OF TRAFFIC AND PEDESTRAIN REQUIREMENT.
9. THE ROAD MARKING SHALL BE DETERMINED WITH THE LASTEST VERSION OF THE DOH. ROAD MARKING MANUAL.

REF.	REVISION	SIGNATURE	DATE

KINGDOM OF THAILAND

MINISTRY OF TRANSPORT
DEPARTMENT OF HIGHWAYS

STANDARD DRAWING

TYPICAL CROSS–SECTION AT VILLAGE SECTION FOR NARROW R.O.W – I

DESIGNED : D.O.H. & CONSULTANTS	CHECKED : BUREAU OF LOCATION & DESIGN	DATE : OCT 2015
SUBMITTED : (DIRECTOR OF LOCATION & DESIGN BUREAU)		SCALE : AS SHOWN
		DWG NO. TS–201
APPROVED : (FOR DIRECTOR GENERAL)		SHEET NO. 3

D:\std dwg 2015\TS-201(REV00)

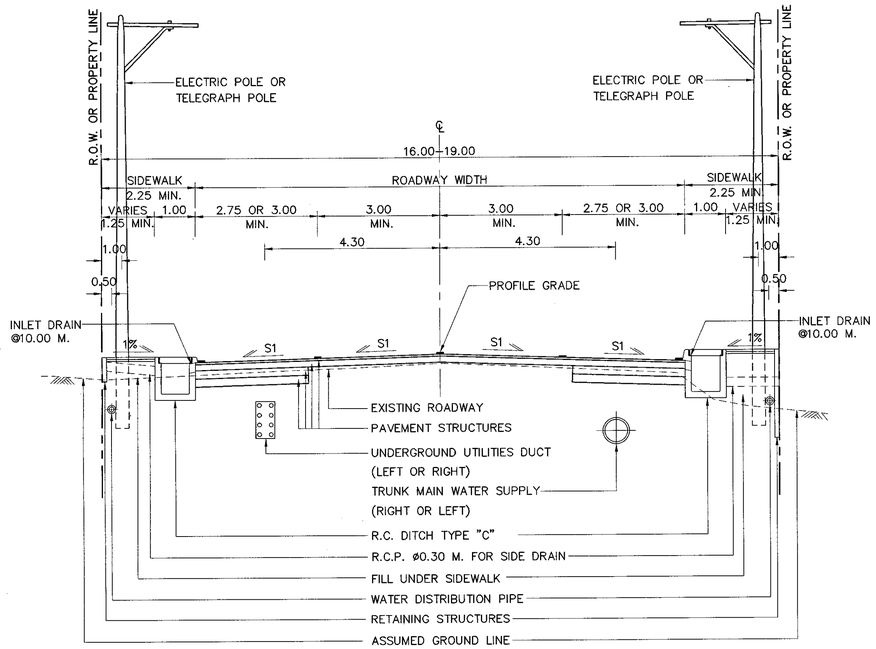

FIGURE V : ULTIMATE TYPICAL CROSS–SECTION FOR R.O.W. 16.00 M. MIN.
SCALE 1 : 75 (LIGHTLY TO MEDIUM POPULATED AREA)

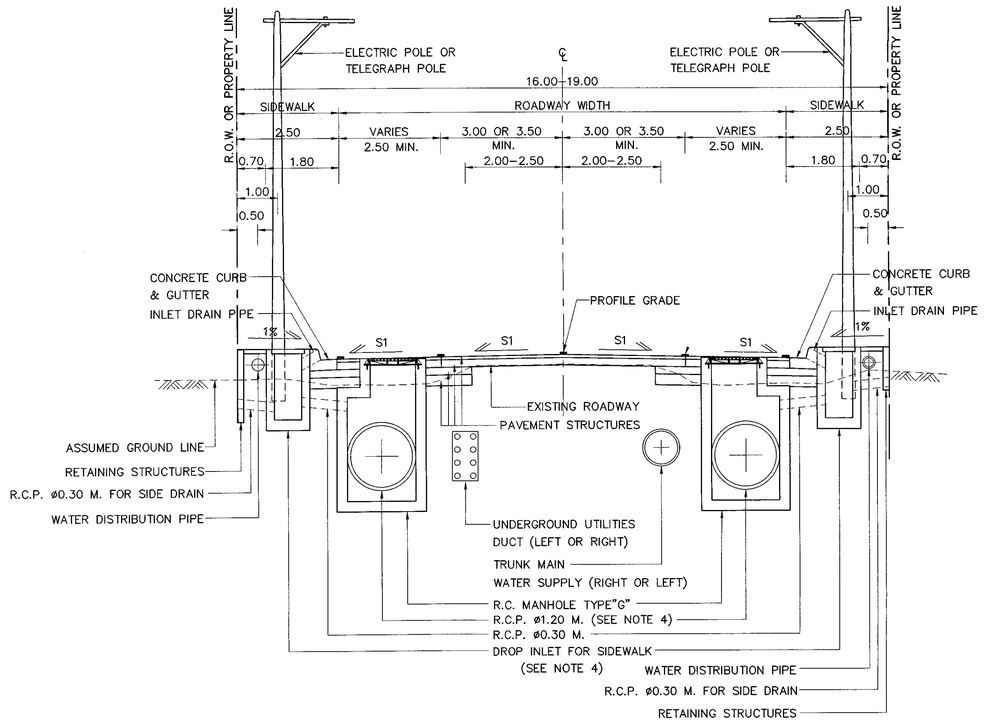

FIGURE VI : ULTIMATE TYPICAL CROSS–SECTION FOR R.O.W. 16.00–19.00 M.
SCALE 1 : 75 (MEDIUM TO DENSELY POPULATED AREA)

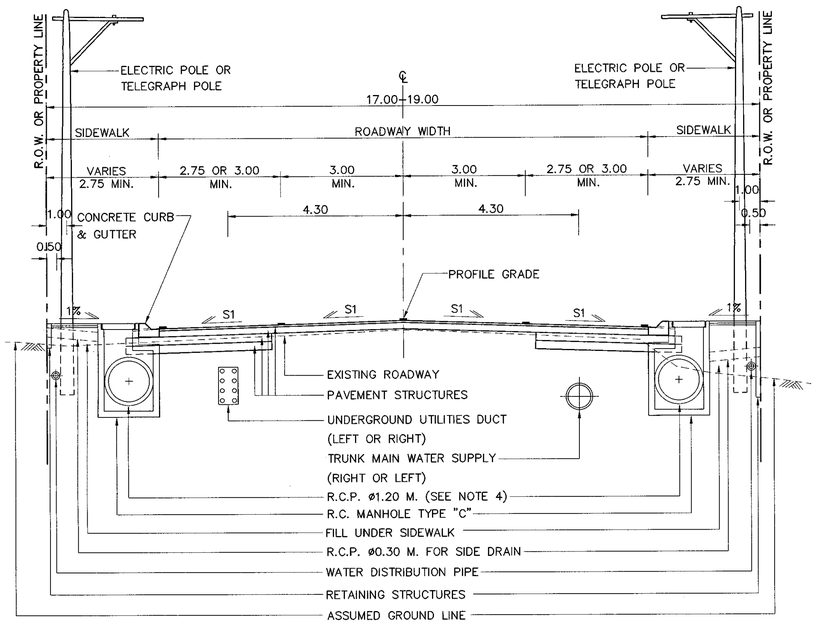

FIGURE VII : ULTIMATE TYPICAL CROSS–SECTION FOR R.O.W. 17.00–19.00 M.
SCALE 1 : 75 (DENSELY POPULATED AREA)

NOTES:

1. DIMENSIONS ARE IN METERS UNLESS OTHERWISE INDICATED.
2. S1 = NORMAL CROSS SLOPE, AS SHOWN ON TYPICAL CROSS–SECTION
3. THE POSITION OF WATER DISTRIBUTION PIPE OR THE OTHER UTILITIES SHALL BE ADJUSTED IN THE FIELD AS DIRECTED BY THE ENGINEER.
4. THE LONGITUDINAL DRAINAGE STRUCTURE AS SHOWN ON THIS DRAWING IS GUIDANCE ONLY. FOR DRAINAGE REQUIREMENT SUITABILITY, THESE DRAINAGE STRUCTURE SHALL BE RESIZED OR SUBSTITUTED WITH THE OTHER DRAINAGE STRUCTURE AS DIRECTED BY THE ENGINEER, AS FOLLOWS :
   - 4.1 IN CASE OF LOW DRAINAGE FLOW:
     - (1) SIZE OF R.C.PIPE SHALL BE REDUCED.HOWEVER,THE R.C.PIPE DIAMETER SHALL NOT LESS THAN 0.60 M.
     - (2) THE R.C.PIPE AND MANHOLE UNDER THE ROADWAY WITH DROP INLET FOR THE SIDEWALK OR THE R.C.PIPE AND MANHOLE IN THE SIDEWALK SHALL BE SUBSTITUTED WITH R.C. DITCH TYPE "B",WHICH IS CONSTRUCTED UNDER THE SIDEWALK.
   - 4.2 IN CASE OF MORE DRAINAGE REQUIREMENT.
     - (1) SIZE OF R.C.PIPE SHALL BE ENLARGED BUT THE DIAMETER SHALL NOT EXCEED 1.50 M.
     - (2) IF THE REQUIRED OPENING IS MORE THAN THE R.C.PIPE DIAMETER 1.50 M. OPENING ,THE BOX CULVERT SHALL BE APPLIED.
5. THE PAVEMENT STRUCTURE OF THE ROADWAY SHALL BE SPECIFIED AS DESIGNED FOR EACH PROJECT.
6. THE INVERT OF SIDE DITCH SHALL BE LOWER THAN THE PROFILE GRADE TO 1.20 M. MOREOVER, THESE INVERT ELEVATION MAY BE ADJUSTED IN THE FIELD TO SUIT FOR ACTUAL SUCCESSIVE FLOW.
7. THE ELEMENT OF TYPICAL SECTION SHALL BE ADJUSTED AND CONSIDERED FOR OTHER FUNCTIONS IN TERM OF TRAFFIC AND PEDESTRAIN REQUIREMENT.
8. THE ROAD MARKING SHALL BE DETERMINED WITH THE LASTEST VERSION OF THE DOH. ROAD MARKING MANUAL.
9. UNDERGROUND UTILITIES DUCT AND TRUNK MAIN WATER SUPPLY SHALL BE LOCATED ALTERNATIVELY.

REF.	REVISION	SIGNATURE	DATE

KINGDOM OF THAILAND
MINISTRY OF TRANSPORT
DEPARTMENT OF HIGHWAYS

STANDARD DRAWING

TYPICAL CROSS–SECTION AT VILLAGE SECTION FOR NARROW R.O.W – II

DESIGNED : D.O.H. & CONSULTANTS	CHECKED : BUREAU OF LOCATION & DESIGN	DATE : OCT 2015
SUBMITTED : (DIRECTOR OF LOCATION & DESIGN BUREAU)		SCALE : AS SHOWN
APPROVED : (FOR DIRECTOR GENERAL)		DWG NO. TS–202
		SHEET NO. 4

D:\std dwg 2015\TS-202(REV00)

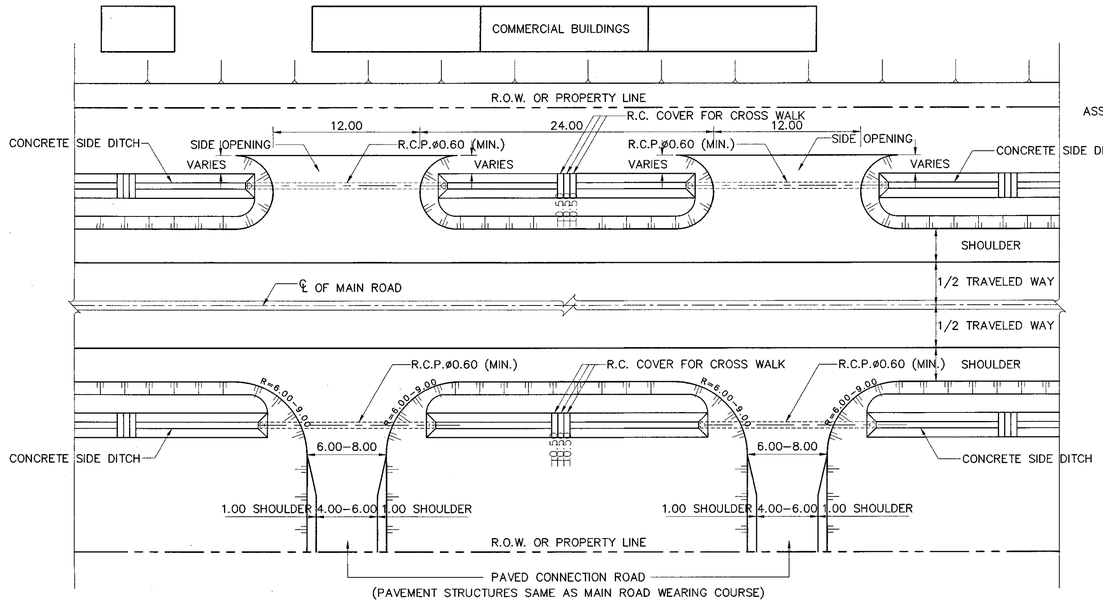

TYPICAL PLAN

SCALE 1 : 250

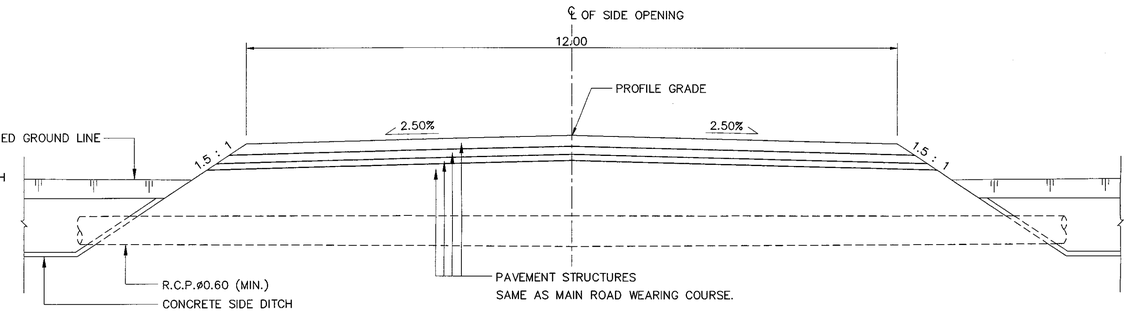

TYPICAL CROSS-SECTION FOR SIDE OPENING

SCALE 1 : 100

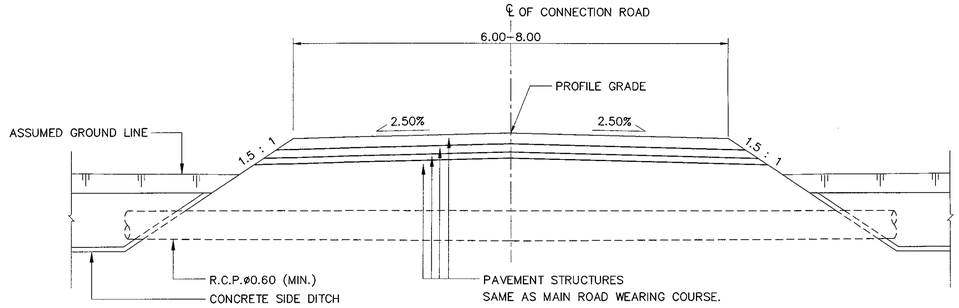

TYPICAL CROSS-SECTION FOR CONNECTION ROAD

SCALE 1 : 100

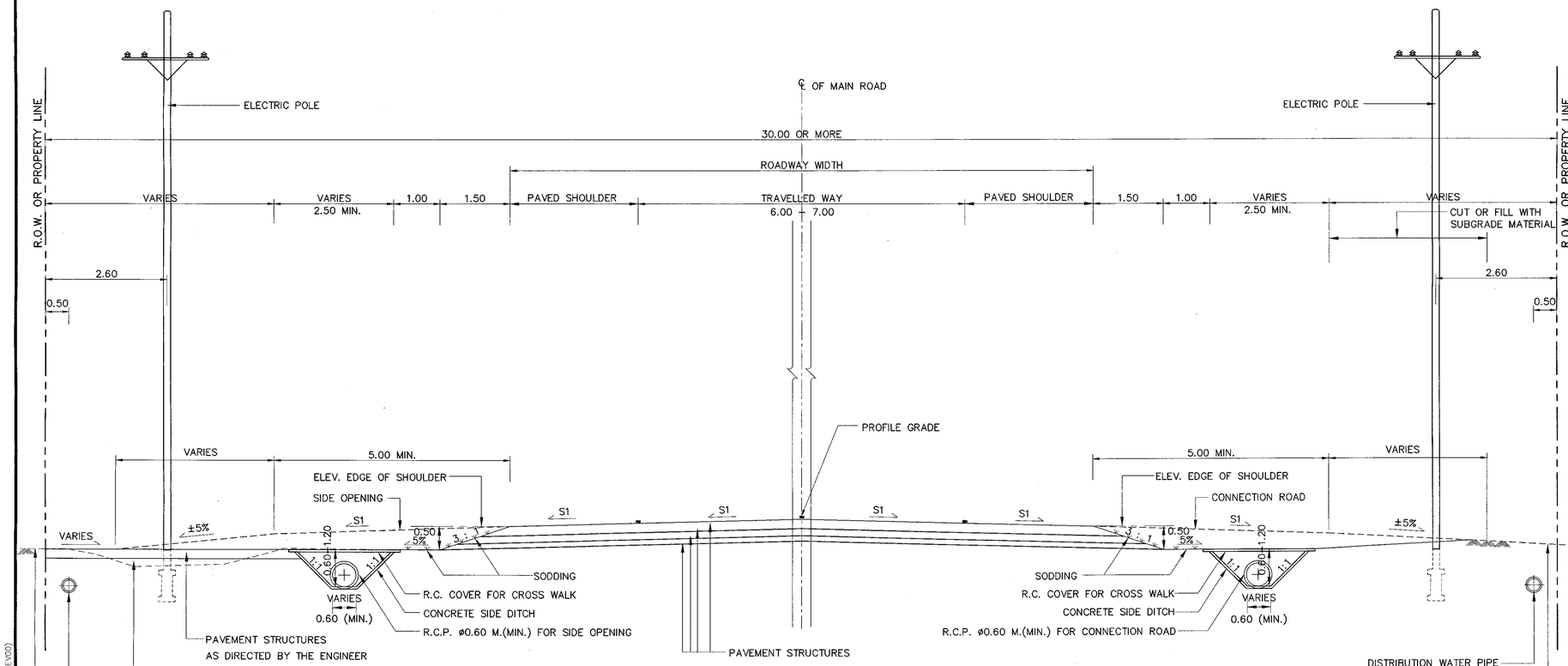

TYPICAL CROSS-SECTION

SCALE 1 : 100

NOTES:

1. ALL DIMENSIONS ARE IN METERS UNLESS OTHERWISE INDICATED.
2. THIS TYPICAL SECTION SHALL BE USED INCASE THE LOCATION OF CONSTRUCTION IS SUBURBAN OR THE LANDUSE BESIDE THE HIGHWAY IS THE LIGHTLY POPULATED AREA.
3. THE POSITION OF UTILITY SHALL BE ADJUSTED IN THE FIELD AS DIRECTED BY THE ENGINEER.
4. CONCRETE SIDE DITCH AND R.C. COVER FOR CROSS WALK SHALL BE USED ACCORDING TO DWG. NO. DS-201
5. S1 = NORMAL CROSS SLOPE AS SHOWN ON TYPICAL CROSS-SECTION.
6. THIS DRAWING SHALL BE USED IN ACCORDANCE WITH DOH. PERMISSION MANUAL FOR THE CONNECTION ROAD AND BUILDING CONSTRUCTION AT ADJACENT R.O.W..
7. THE R.C.P.ø 0.60 M. AS SHOWN ON THIS DRAWING IS GENERAL GUIDANCE FOR THE RURAL AREA.FOR THE BANGKOK METROPOLITAN REGION, THE R.C.P.2-ø1.00 M. OR BOX CULVERT SHALL BE APPILED. FURTHERMORE , IF THE PIPE IS INSTALLED ON THE EXISTING DITCH, THE PIPE WIDTH SHALL NOT LESS THAN 75% OF EXISTING DITCH WIDTH AND INNER SOFFIT OF THE CONDUIT SHALL BE LOCATED ABOVE HWL.
8. THE WIDTH OF THE CONNECTION ROAD AS SHOWN ON THIS DRAWING IS GENERAL GUIDANCE IN CASE OF THE DETAIL OF THE CONNECTION ROAD ON THE CONSTRUCTION DRAWING IS UNAVAILABLE.THESE ROAD WIDTH SHALL BE THE SAME AS THE EXISTING PAVED CONNECTION ROAD OR AS DIRECTED BY THE ENGINEER IN THE FIELD BUT SHALL NOT BE WIDER THAN THE MAIN ROAD.
9. THIS DRAWING SHALL BE REFERANCED TO DWG. NO. GN-502 AND GN-503
10. THE PAVEMENT STRUCTURE OF THE ROADWAY SHALL BE SPECIFIED AS DESIGNED FOR EACH PROJECT.

KINGDOM OF THAILAND

MINISTRY OF TRANSPORT

DEPARTMENT OF HIGHWAYS

STANDARD DRAWING

TYPICAL CROSS-SECTION AT VILLAGE SECTION

FIRST STAGE FOR LIGHTLY TO MEDIUM POPULATED AREA

DESIGNED : D.O.H. & CONSULTANTS	**CHECKED :** BUREAU OF LOCATION & DESIGN	**DATE :** OCT 2015	
SUBMITTED : (DIRECTOR OF LOCATION & DESIGN BUREAU)		**SCALE :** AS SHOWN	
APPROVED : (FOR DIRECTOR GENERAL)		**DWG NO.** TS-203	
		SHEET NO. 5	

REF.	REVISION	SIGNATURE	DATE

D:\std dwg 2015\TS-203(REV00)

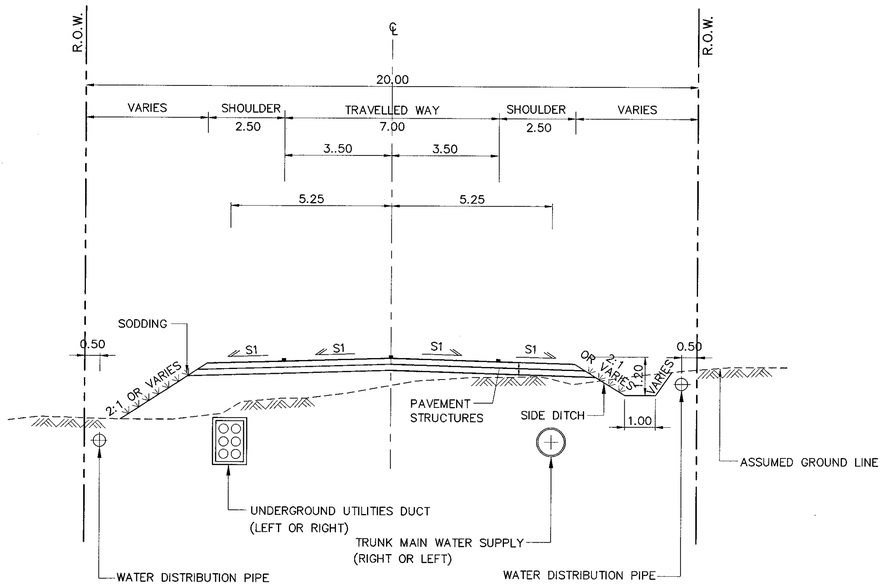

PROPOSED 2–LANE (FIRST STAGE)

SCALE 1 : 100

NOTES:

1. ALL DIMENSIONS ARE IN METERS UNLESS OTHERWISE INDICATED.
2. THESE ULTIMATE TYPICAL CROSS–SECTION SHALL BE USED INCASE THE LANDUSE BESIDE THE HIGHWAY IS DENSELY POPULATED AREA.
3. WIDTH OF TRAVELLED WAY AND SIDEWALK SHALL BE ADJUSTED TO SUIT FOR THE CONDITIONS AS FOLLOWS ; TRAFFIC SPEED, TRUCK VOLUME, PEDESTRAINS VOLUME ETC.
4. THE LONGITUDINAL DRAIN PIPE AS SHOWN ON THIS DRAWING SHALL BE ENLARGED TO BOX CULVERT SIZE 1.20x1.20 M. OR MORE (NOT EXCEED 2.10x2.10 M.) IN CASE DRAINAGE REQUIREMENT IS EXCEEDING. IN ADDITION, IT'S SIZE SHALL BE REDUCED IN CASE DRAINAGE REQUIREMENT IS LOWER.
5. THIS DRAWING IS GUIDANCE ONLY. THE DIMENSION AND LOCATION OF UTILITIES MAY BE ADJUSTED TO SUIT FOR THE FIELD CONDITION.
6. CRITERIA FOR UTILITIES LOCATION CONSIDERATION
   - 6.1 AS SHOWN ON THIS DRAWING UTILITIES SHALL BE LOCATED FOR NEW CONSTRUCTION HIGHWAYS OR NO EXISTING UTILITIES.
   - 6.2 WHEN THERE ARE EXISTING UTILITIES OR EXISTING ROADWAY,THE LOCATION OF THE PROPOSED UTILITIES SHALL BE ADJUSTED IF NECESSAY.
7. UNDERGROUND UTILITIES DUCT AND TRUNK MAIN WATER SUPPLY SHALL BE LOCATED ALTERNATIVELY.
8. IN CASE THE SIDEWALK IS MORE THAN 2.50 M. AND LOCATED IN POPULATED AREA USING BY AMOUNT OF PERSONS WITH DISABILITY, THE HANDICAP WALKWAY DRAWINGS SHALL BE USED ACCORDING TO DWG. NO. EN–401, EN–402 AND EN–403
9. S1 = NORMAL CROSS SLOPE AS SHOWN ON THE TYPICAL CROSS–SECTION.
10. THE INVERT OF SIDE DITCH SHALL BE LOWER THAN THE PROFILE GRADE TO 1.20 M. MOREOVER, THESE INVERT ELEVATION MAY BE ADJUSTED IN THE FIELD TO SUIT FOR ACTUAL SUCCESSIVE FLOW.
11. THE ELEMENT OF TYPICAL SECTION SHALL BE ADJUSTED AND CONSIDERED FOR OTHER FUNCTIONS IN TERM OF TRAFFIC AND PEDESTRAIN REQUIREMENT.
12. THE PAVEMENT STRUCTURES OF THE ROADWAY SHALL BE SPECIFIED AS DESIGNED FOR EACH PROJECT.

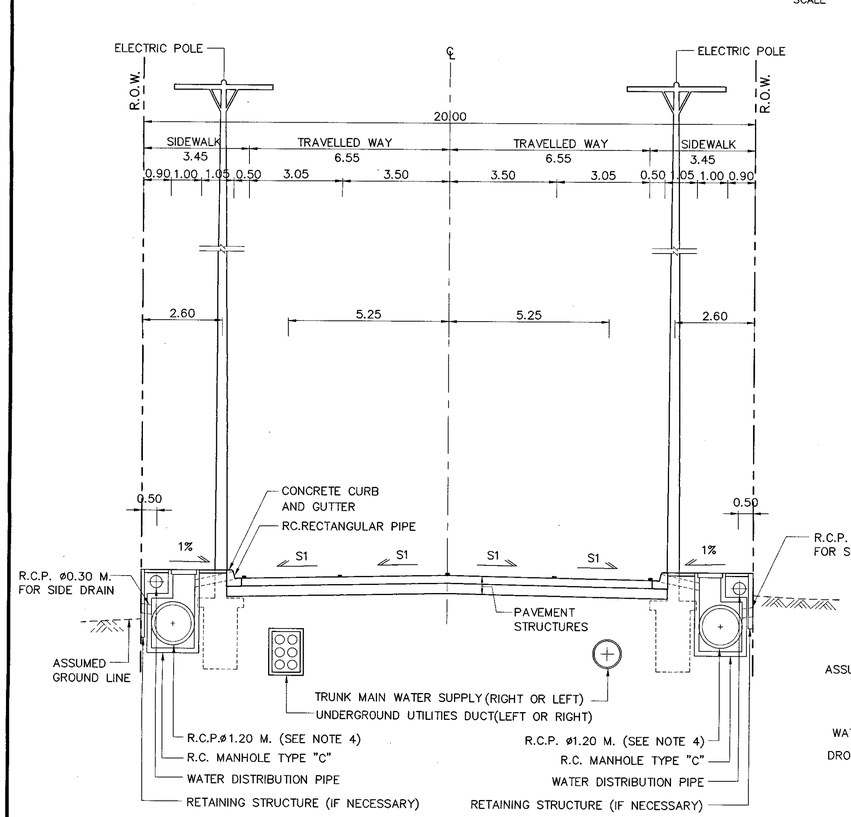

PROPOSED 4–LANE UNDIVIDED FOR ULTIMATE STAGE (ALTERNATIVE I)

SCALE 1 : 100

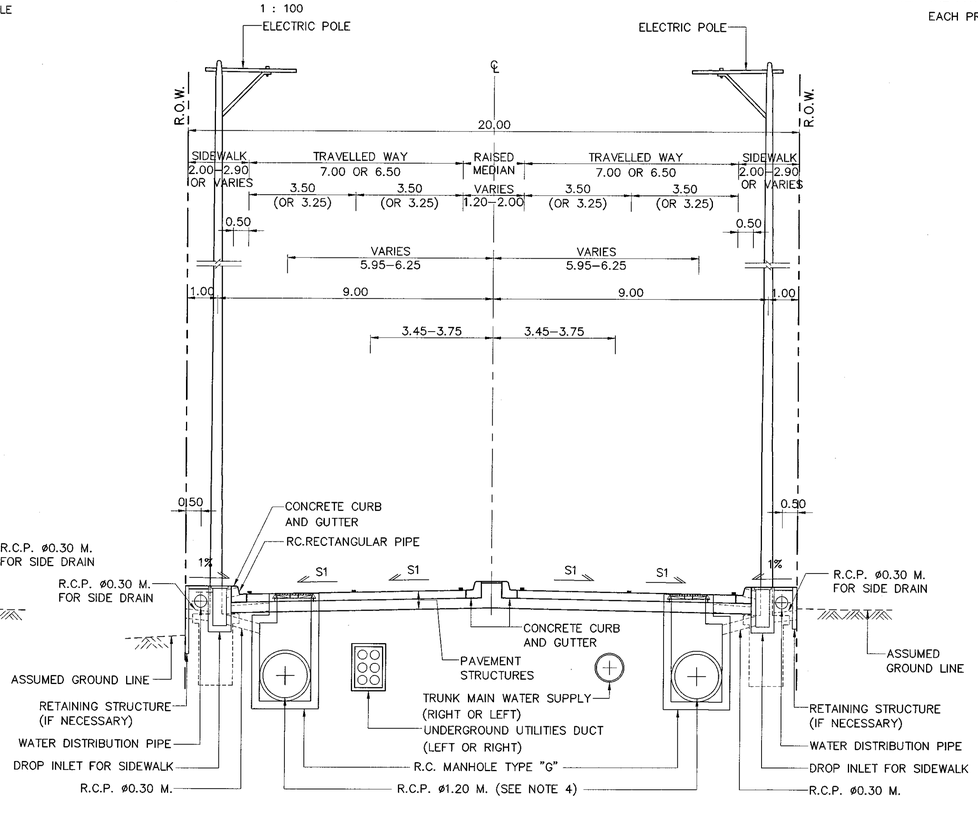

PROPOSED 4–LANE DIVIDED FOR ULTIMATE STAGE (ALTERNATIVE II)

SCALE 1 : 100

REF.	REVISION	SIGNATURE	DATE

KINGDOM OF THAILAND

MINISTRY OF TRANSPORT

DEPARTMENT OF HIGHWAYS

STANDARD DRAWING

TYPICAL CROSS–SECTION FOR DIVIDED HIGHWAY

R.O.W. WIDTH 20.00 M.

DESIGNED : D.O.H. & CONSULTANTS	CHECKED : BUREAU OF LOCATION & DESIGN	DATE : OCT 2015
SUBMITTED : (DIRECTOR OF LOCATION & DESIGN BUREAU)		SCALE : AS SHOWN
APPROVED : (FOR DIRECTOR GENERAL)		DWG NO. TS–301
		SHEET NO. 6

D:\std dwg 2015\TS-301(REV00)

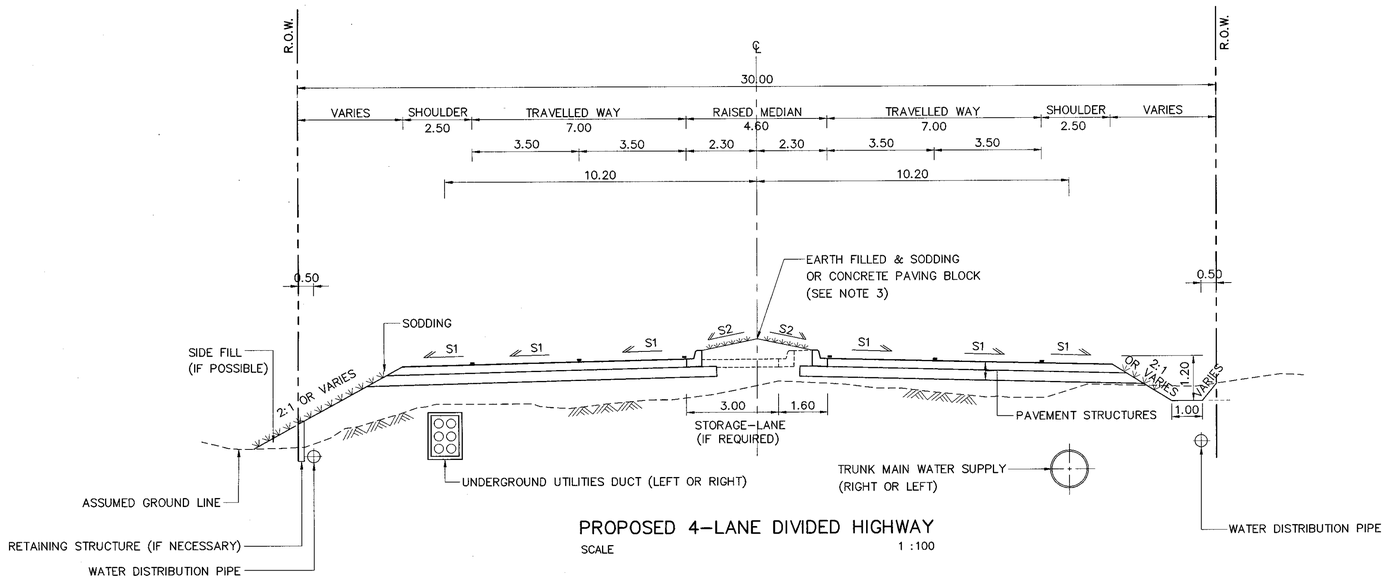

PROPOSED 4-LANE DIVIDED HIGHWAY

SCALE 1 :100

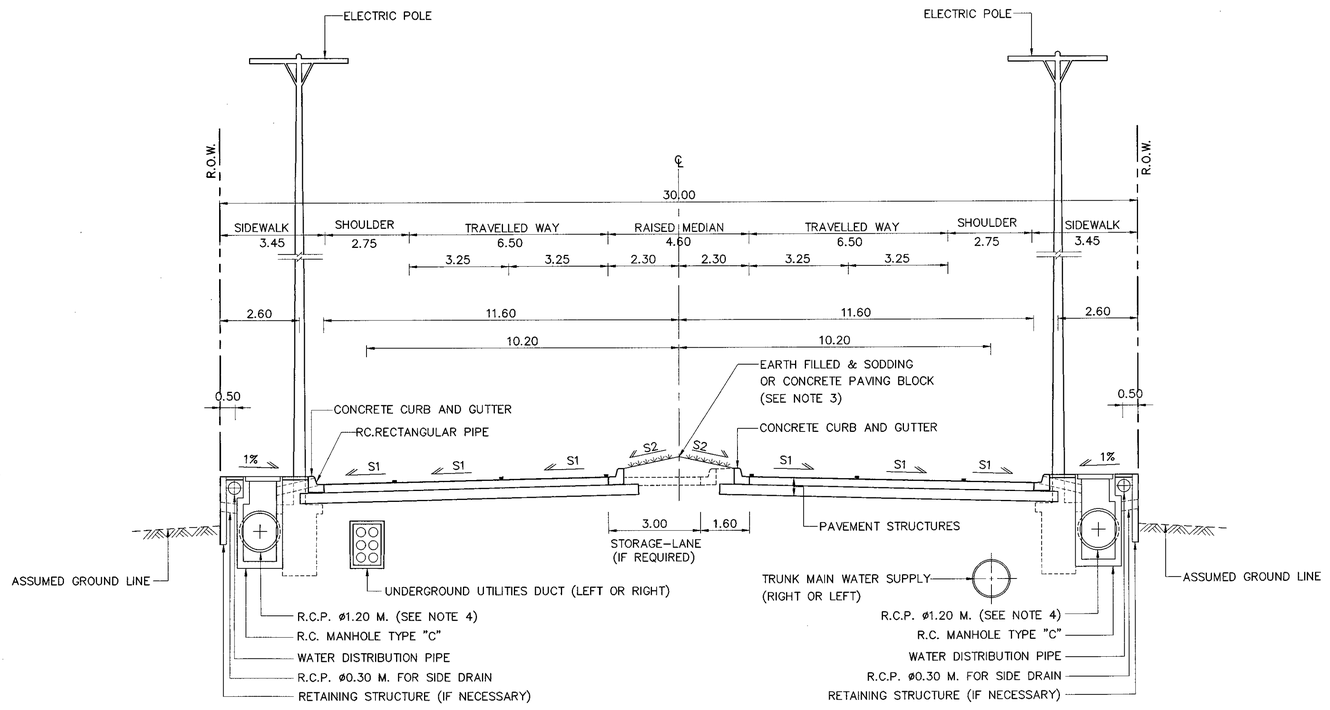

PROPOSED 4-LANE DIVIDED HIGHWAY (ULTIMATE STAGE)

SCALE 1 :100

NOTES:

1. ALL DIMENSIONS ARE IN METERS UNLESS OTHERWISE INDICATED.
2. THE ULTIMATE TYPICAL CROSS-SECTION SHALL BE USED IN CASE THE LANDUSE BESIDE HIGHWAY IS THE DENSELY POPULATED AREA.
3. TYPE OF MEDIAN SURFACING CONSTRUCTION ON EARTH FILLED IN MEDIAN IS DIRECTED BY THE ENGINEER.
4. THE LONGITUDINAL DRAIN PIPE AS SHOWN ON THIS DRAWING SHALL BE ENLARGED TO BOX CULVERT SIZE 1.20x1.20 M. OR MORE (NOT EXCEED 2.10x2.10 M.) IN CASE DRAINAGE REQUIREMENT IS EXCEEDING. IN ADDITION, IT'S SIZE SHALL BE REDUCED IN CASE DRAINAGE REQUIREMENT IS LOWER.
5. THIS DRAWING IS GUIDANCE ONLY. THE DIMENSION AND LOCATION OF UTILITIES SHALL BE ADJUSTED TO SUIT FOR THE FIELD CONDITION.
6. CRITERIA FOR UTILITIES LOCATION CONSIDERATION
   - 6.1 AS SHOWN ON THIS DRAWING UTILITIES SHALL BE LOCATED FOR NEW CONSTRUCTION HIGHWAYS OR NO EXISTING UTILITIES.
   - 6.2 WHEN THERE ARE EXISTING UTILITIES OR EXISTING ROADWAY,THE LOCATION OF THE PROPOSED UTILITIES SHALL BE ADJUSTED IF NECESSAY.
7. UNDERGROUND UTILITIES DUCT AND TRUNK MAIN WATER SUPPLY SHALL BE LOCATED ALTERNATIVELY.
8. HEIGHT OF ELECTRIC POLE SHALL BE NOT MORE THAN 22.00 M. OR WIDTH OF FOOTING SHALL BE NOT MORE THAN 1.10 M. FOR TYPICAL AS SHOWN ON THIS DRAWING.
9. THE FISRT STAGE ROADWAY SHALL BE IMPROVED TO THE 6-LANE ROADWAY (ULTIMATE STAGE) IN CASE THE TRAFFIC VOLUME IS EXCEEDING. THE OPTIONAL METHOD OF THE ROAD IMPROVEMENT AS FOLLOWS ; CONVERTING SHOULDER WIDTH TO LANE WIDTH, REDUCING SIDEWALK WIDTH ,SUBSTITUTION OF MANHOLE TYPE C WITH MANHOLE TYPE G AND DROP INLET FOR SIDEWALK, ETC.
10. IN CASE OF THE SIDEWALK USING BY AMOUNT OF PERSONS WITH DISABILITY, THE HANDICAP WALKWAY DRAWINGS SHOULD BE IMPLEMENTED ACCORDING TO DWG. NO. EN-401, EN-402 AND EN-403
11. S1 = NORMAL CROSS SLOPE AS SHOWN ON THE TYPICAL CROSS-SECTION. S2 = SLOPE OF THE MEDIAN SURFACE.
12. THE INVERT OF SIDE DITCH SHALL BE LOWER THAN THE PROFILE GRADE TO 1.20 M. MOREOVER, THESE INVERT ELEVATION MAY BE ADJUSTED IN THE FIELD TO SUIT FOR ACTUAL SUCCESSIVE FLOW.
13. THE ELEMENT OF TYPICAL SECTION SHALL BE ADJUSTED AND CONSIDERED FOR OTHER FUNCTIONS IN TERM OF TRAFFIC AND PEDESTRAIN REQUIREMENT.
14. THE PAVEMENT STRUCTURES OF THE ROADWAY SHALL BE SPECIFIEDAS DESIGNED FOR EACH PROJECT.

REF.	REVISION	SIGNATURE	DATE

KINGDOM OF THAILAND

MINISTRY OF TRANSPORT

DEPARTMENT OF HIGHWAYS

STANDARD DRAWING

TYPICAL CROSS-SECTION FOR DIVIDED HIGHWAY
R.O.W. WIDTH 30.00 M.

DESIGNED : D.O.H. & CONSULTANTS	CHECKED : BUREAU OF LOCATION & DESIGN	DATE : OCT 2015
SUBMITTED : (DIRECTOR OF LOCATION & DESIGN BUREAU)		SCALE : AS SHOWN
APPROVED : (FOR DIRECTOR GENERAL)		DWG NO. TS-302
		SHEET NO. 7

D:\std dwg 2015\TS-302(REV00)

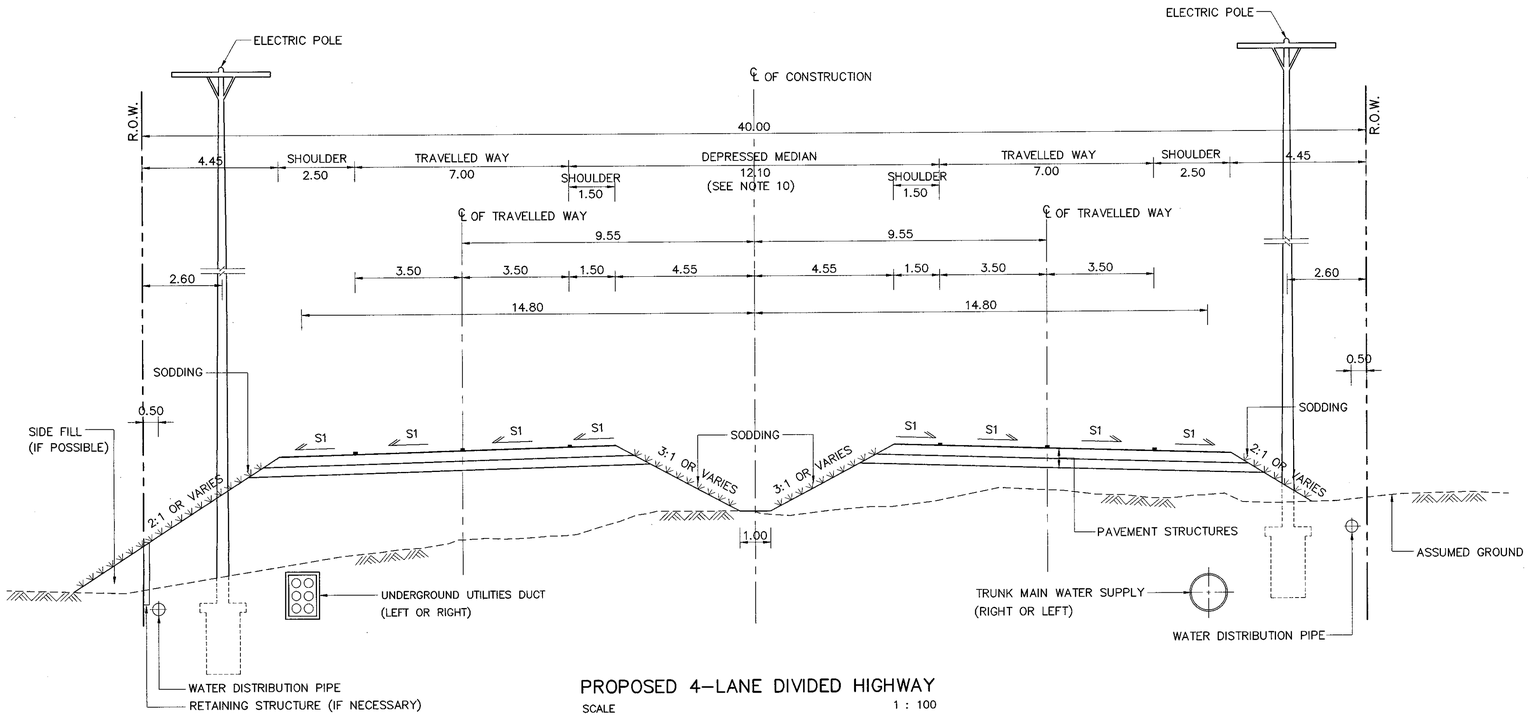

PROPOSED 4–LANE DIVIDED HIGHWAY

SCALE 1 : 100

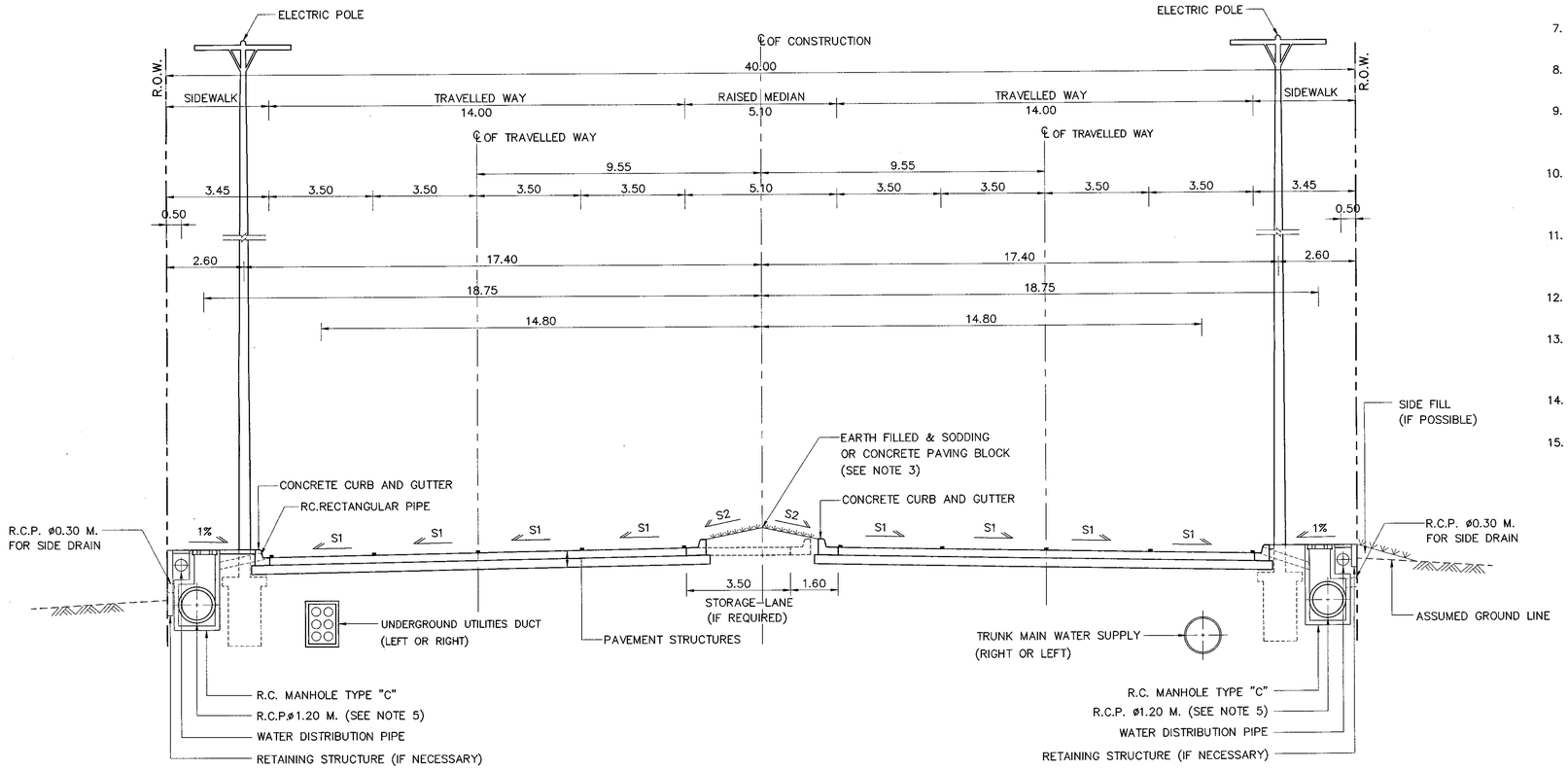

PROPOSED 8–LANE DIVIDED HIGHWAY (ULTIMATE STAGE)

SCALE 1 : 100

NOTES:

1. ALL DIMENSIONS ARE IN METERS UNLESS OTHERWISE INDICATED.
2. THE ULTIMATE TYPICAL CROSS–SECTION SHALL BE USED INCASE THE LANDUSE BESIDE HIGHWAY IS THE DENSLYE POPULATED AREA.
3. TYPE OF MEDIAN SURFACING CONSTRUCTION ON EARTH FILLED IN MEDIAN IS DIRECTED BY THE ENGINEER.
4. WIDTH OF ROADWAY OR SIDEWALK SHALL BE ADJUSTED TO SUIT FOR THE IN SITU CONDITION SUCH AS UTILITIES LOCATION , DRAINAGE SYSTEM ETC.
5. THE LONGITUDINAL DRAIN PIPE AS SHOWN ON THIS DRAWING SHALL BE ENLARGED TO BOX CULVERT SIZE 1.20x1.20 M. OR MORE (NOT EXCEED 2.10x2.10 M.) IN CASE DRAINAGE REQUIREMENT IS EXCEEDING. IN ADDITION, IT'S SIZE SHALL BE REDUCED IN CASE DRAINAGE REQUIREMENT IS LOWER.
6. CRITERIA FOR UTILITIES LOCATION CONSIDERATION
   - 6.1 AS SHOWN ON THIS DRAWING UTILITIES SHALL BE LOCATED FOR NEW CONSTRUCTION HIGHWAYS OR NO EXISTING UTILITIES.
   - 6.2 WHEN THERE ARE EXISTING UTILITIES OR EXISTING ROADWAY,THE LOCATION OF THE PROPOSED UTILITIES SHALL BE ADJUSTED IF NECESSAY.
7. THIS DRAWING IS GUIDANCE ONLY. THE DIMENSION AND LOCATION OF UTILITIES MAY BE ADJUSTED TO SUIT FOR THE FIELD CONDITION.
8. UNDERGROUND UTILITIES DUCT AND TRUNK MAIN WATER SUPPLY SHALL BE LOCATED ALTERNATIVELY.
9. HEIGHT OF ELECTRIC POLE SHALL BE NOT MORE THAN 22.00 M. OR WIDTH OF FOOTING SHALL BE NOT MORE THAN 1.10 M. FOR TYPICAL AS SHOWN ON THIS DRAWING.
10. IN CASE THE PROJECT ROAD HAS BEEN IMPROVED TO THE ULTIMATE STAGE , THE ADDITIONAL LANES SHALL BE BUILT OVERLAP THE DEPRESSED MEDIAN AREA. THEREFORE,THE DEPRESSED MEDIAN WILL BE ADOPT TO RAISED MADIAN AS WELL.
11. IN CASE OF THE SIDEWALK USING BY AMOUNT OF PERSONS WITH DISABILITY, THE SIDEWALK FOR PERSONS WITH HANDICAP DRAWINGS SHALL BE USED ACCORDING TO DWG. NO. EN–401, EN–402 AND EN–403
12. S1 = NORMAL CROSS SLOPE OF THE MAIN ROAD.
    S2 = SLOPE OF THE MEDIAN SURFACE. (SEE DWG. NO. MD–902)
13. THE INVERT OF SIDE DITCH SHALL BE LOWER THAN THE PROFILE GRADE TO 1.20 M. MOREOVER, THESE INVERT ELEVATION MAY BE ADJUSTED IN THE FIELD TO SUIT FOR ACTUAL SUCCESSIVE FLOW.
14. THE ELEMENT OF TYPICAL SECTION SHALL BE ADJUSTED AND CONSIDERED FOR OTHER FUNCTIONS IN TERM OF TRAFFIC AND PEDESTRAIN REQUIREMENT.
15. THE PAVEMENT STRUCTURES OF THE ROADWAY SHALL BE SPECIFIED AS DESIGNED FOR EACH PROJECT.

REF.	REVISION	SIGNATURE	DATE

KINGDOM OF THAILAND

MINISTRY OF TRANSPORT

DEPARTMENT OF HIGHWAYS

STANDARD DRAWING

TYPICAL CROSS–SECTION FOR DIVIDED HIGHWAY R.O.W. WIDTH 40.00 M.

DESIGNED : D.O.H. & CONSULTANTS	**CHECKED :** BUREAU OF LOCATION & DESIGN	**DATE :** OCT 2015
SUBMITTED : (DIRECTOR OF LOCATION & DESIGN BUREAU)		**SCALE :** AS SHOWN
APPROVED : (FOR DIRECTOR GENERAL)		**DWG NO.** TS–303
		SHEET NO. 8

D:\std dwg 2015\TS-303(REV00)

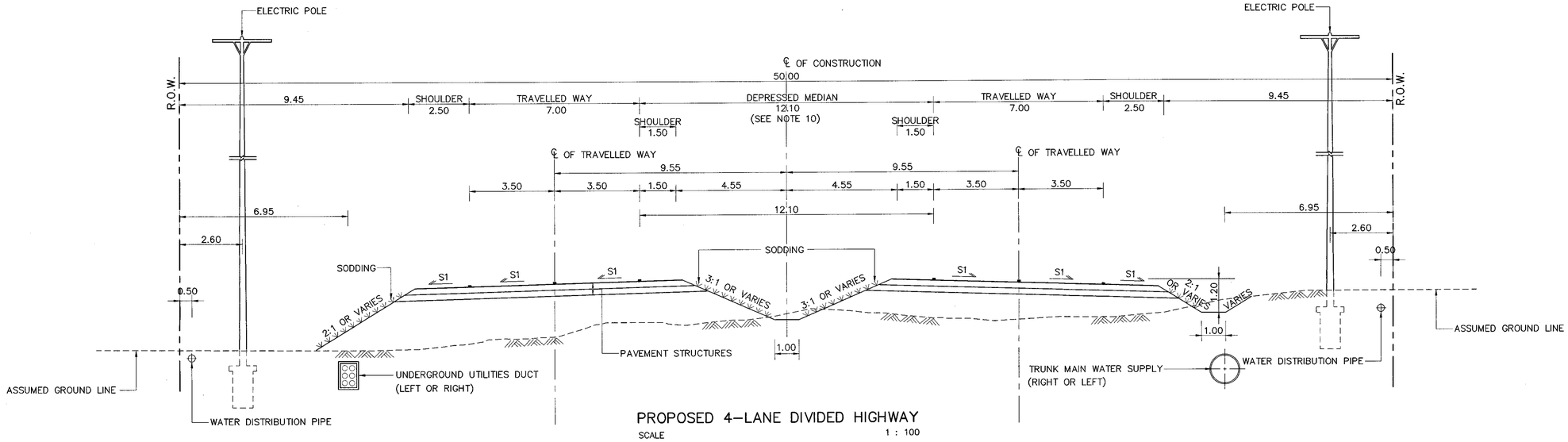

PROPOSED 4–LANE DIVIDED HIGHWAY

SCALE 1 : 100

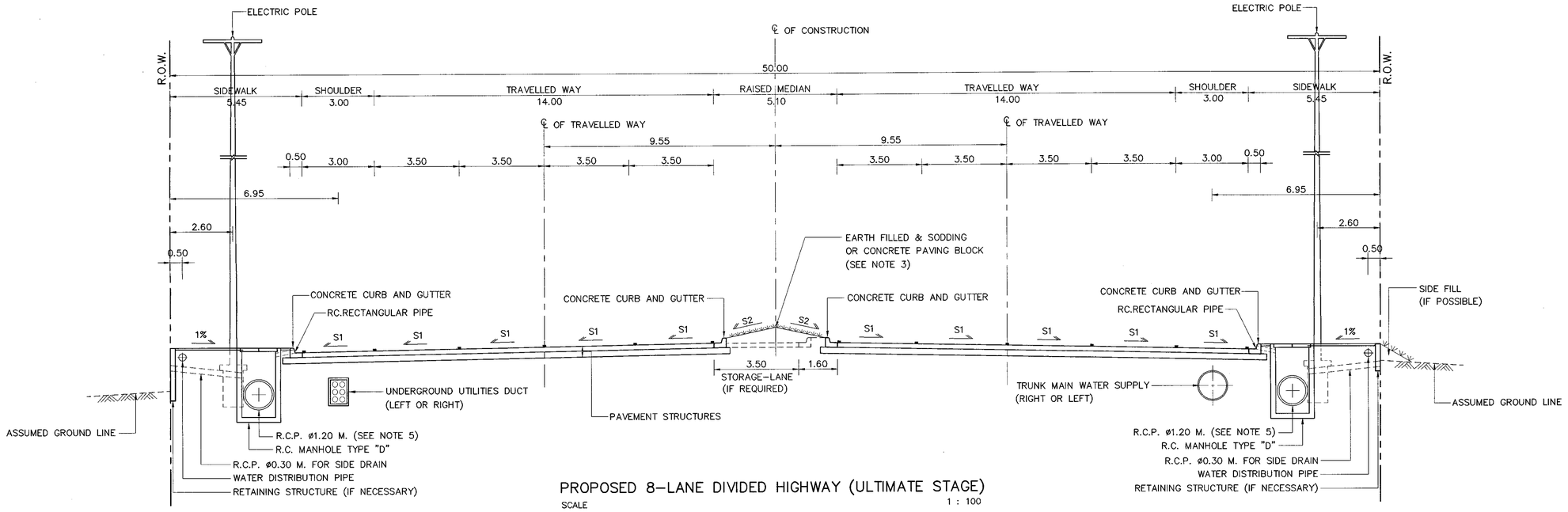

PROPOSED 8–LANE DIVIDED HIGHWAY (ULTIMATE STAGE)

SCALE 1 : 100

NOTES:

1. ALL DIMENSIONS ARE IN METERS UNLESS OTHERWISE INDICATED.
2. THE ULTIMATE TYPICAL CROSS–SECTION SHALL BE USED INCASE THE LANDUSE BESIDE HIGHWAY IS THE DENSELY POPULATED AREA.
3. TYPE OF MEDIAN SURFACING CONSTRUCTION ON EARTH FILLED IN MEDIAN IS DIRECTED BY THE ENGINEER.
4. WIDTH OF ROADWAY OR SIDEWALK SHALL BE ADJUSTED TO SUIT FOR THE IN SITU CONDITION SUCH AS UTILITIES LOCATION , DRAINAGE SYSTEM ETC.
5. THE LONGITUDINAL DRAIN PIPE AS SHOWN ON THIS DRAWING SHALL BE ENLARGED TO BOX CULVERT SIZE 1.20x1.20 M. OR MORE (NOT EXCEED 2.10x2.10 M.) IN CASE DRAINAGE REQUIREMENT IS EXCEEDING. IN ADDITION, IT'S SIZE SHALL BE REDUCED IN CASE DRAINAGE REQUIREMENT IS LOWER.
6. CRITERIA FOR UTILITIES LOCATION CONSIDERATION
   - 6.1 AS SHOWN ON THIS DRAWING UTILITIES SHALL BE LOCATED FOR NEW CONSTRUCTION HIGHWAYS OR NO EXISTING UTILITIES.
   - 6.2 WHEN THERE ARE EXISTING UTILITIES OR EXISTING ROADWAY, THE LOCATION OF THE PROPOSED UTILITIES SHALL BE ADJUSTED IF NECESSAY.
7. THIS DRAWING IS GUIDANCE ONLY. THE DIMENSION AND LOCATION OF UTILITIES MAY BE ADJUSTED TO SUIT FOR THE FIELD CONDITION.
8. UNDERGROUND UTILITIES DUCT AND MAIN TRUNK WATER SUPPLY SHALL BE LOCATED ALTERNATIVELY.
9. HEIGHT OF ELECTRIC POLE SHALL BE NOT MORE THAN 22.00 M. OR WIDTH OF FOOTING SHALL BE NOT MORE THAN 1.10 M. FOR TYPICAL AS SHOWN ON THIS DRAWING.
10. IN CASE THE PROJECT ROAD HAS BEEN IMPROVED TO THE ULTIMATE STAGE, THE ADDITIONAL LANES SHALL BE EXPANDED INTO THE DEPRESSED MEDIAN AREA ON THE BOTH SIDES.
11. IN CASE OF THE SIDEWALK USING BY AMOUNT OF PERSONS WITH DISABILITY, THE SIDEWALK FOR PERSONS WITH HANDICAP DRAWINGS SHALL BE IMPLEMENTED ACCORDING TO DWG. NO. EN–401, EN–402 AND EN–403
12. S1 = NORMAL CROSS SLOPE AS SHOWN ON THE TYPICAL–CROSS SECTION
    S2 = SLOPE OF THE MEDIAN SURFACE.
13. THE INVERT OF SIDE DITCH SHALL BE LOWER THAN THE PROFILE GRADE TO 1.20 M. MOREOVER, THESE INVERT ELEVATION SHALL BE ADJUSTED IN THE FIELD TO SUIT FOR ACTUAL SUCCESSIVE FLOW.
14. THE ELEMENT OF TYPICAL SECTION SHALL BE ADJUSTED AND MIXED SUITABLE FOR THE VARIOUS LOCATION INCLUDING THE VEHICLE AND PEDESTRAIN REQUIREMENT.
15. THE LOCATION OF 2–LANE HIGHWAY AT FIRST STAGE CONSTRUCTION SHALL BE LOCATED ON EITHER LEFT OR RIGHT 2–LANE ROAD OF PROPOSED 4–LANE DIVIDED HIGHWAY AS SHOWN ON THIS DRAWINGS.
16. THE PAVEMENT STRUCTURES OF THE ROADWAY SHALL BE SPECIFIED AS DESIGNED FOR EACH PROJECT.

REF.	REVISION	SIGNATURE	DATE

KINGDOM OF THAILAND

MINISTRY OF TRANSPORT

DEPARTMENT OF HIGHWAYS

STANDARD DRAWING

TYPICAL CROSS–SECTION FOR DIVIDED HIGHWAY R.O.W. WIDTH 50.00 M.

DESIGNED : D.O.H. & CONSULTANTS	CHECKED : BUREAU OF LOCATION & DESIGN	DATE : OCT 2015
SUBMITTED : (DIRECTOR OF LOCATION & DESIGN BUREAU)		SCALE : AS SHOWN
APPROVED : (FOR DIRECTOR GENERAL)		DWG NO. TS–304
		SHEET NO. 9

D:\std dwg 2015\TS-304(REV00)

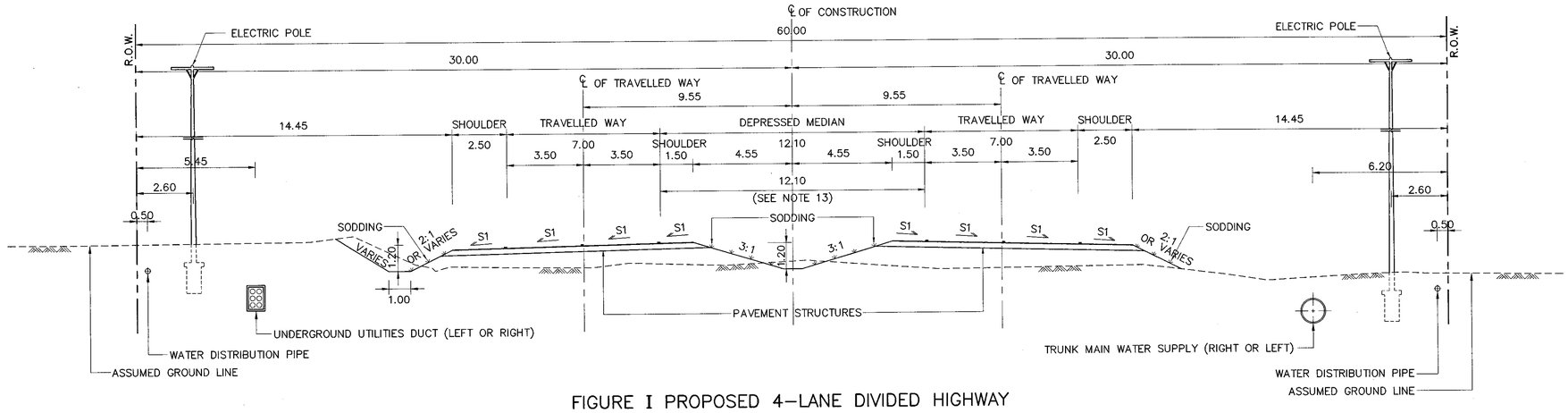

FIGURE I PROPOSED 4–LANE DIVIDED HIGHWAY

SCALE 1 : 125

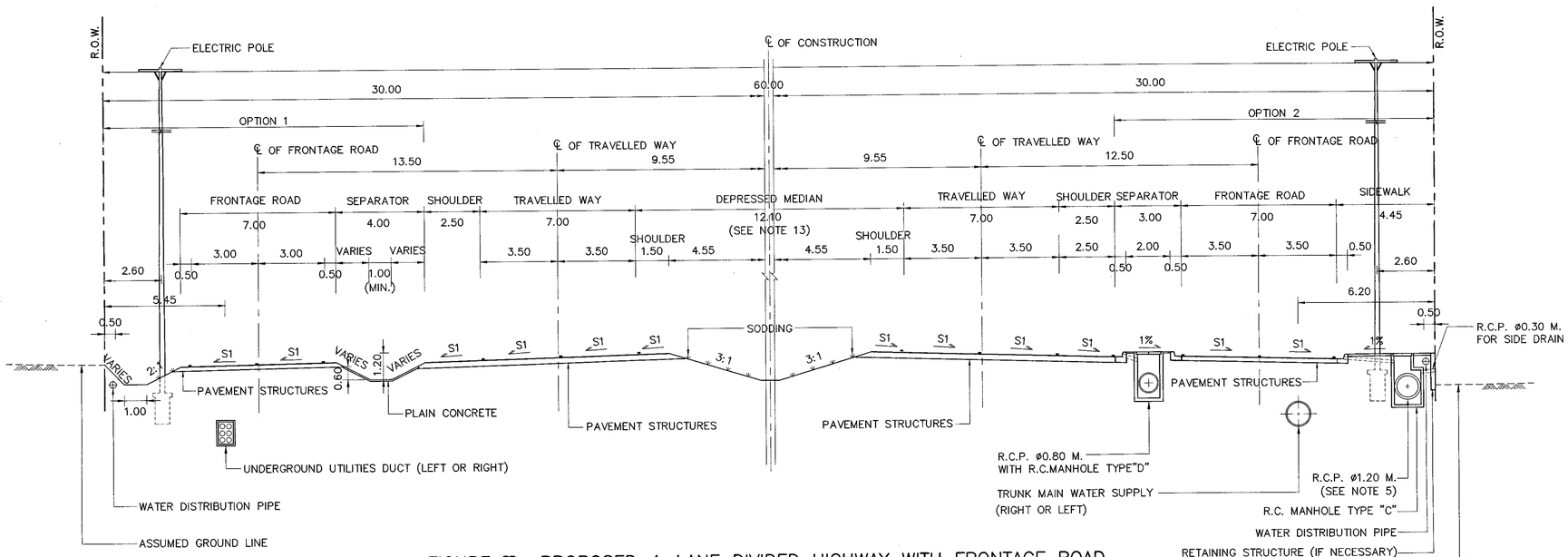

FIGURE II PROPOSED 4–LANE DIVIDED HIGHWAY WITH FRONTAGE ROAD

SCALE 1 : 125

NOTES:

1. ALL DIMENSIONS ARE IN METERS UNLESS OTHERWISE INDICATED.
2. IN FIRST STAGE ,THE LOCATION OF 2–LANE HIGHWAY CONSTRUCTION SHALL BE LOCATED ON EITHER LEFT OR RIGHT 2–LANE ROAD OF PROPOSED 4–LANE DIVIDED HIGHWAY AS SHOWN ON THIS DRAWINGS.
3. THE INVERT OF SIDE DITCH SHALL BE LOWER THAN THE PROFILE GRADE TO 1.20 M. MOREOVER, THESE INVERT ELEVATION SHALL BE ADJUSTED IN THE FIELD TO SUIT FOR ACTUAL SUCCESSIVE FLOW.
4. WIDTH OF ROADWAY OR SIDEWALK SHALL BE ADJUSTED TO SUIT FOR THE IN SITU CONDITION SUCH AS UTILITIES LOCATION , DRAINAGE SYSTEM ETC.
5. THE LONGITUDINAL DRAIN PIPE AS SHOWN ON THIS DRAWING SHALL BE ENLARGED TO BOX CULVERT SIZE 1.20x1.20 M. OR MORE (NOT EXCEED 2.10x2.10 M.) IN CASE DRAINAGE REQUIREMENT IS EXCEEDING. IN ADDITION, IT'S SIZE SHALL BE REDUCED IN CASE DRAINAGE REQUIREMENT IS LOWER.
6. CRITERIA FOR UTILITIES LOCATION CONSIDERATION
   - 6.1 AS SHOWN ON THIS DRAWING UTILITIES SHALL BE LOCATED FOR NEW CONSTRUCTION HIGHWAYS OR NO EXISTING UTILITIES.
   - 6.2 WHEN THERE ARE EXISTING UTILITIES OR EXISTING ROADWAY,THE LOCATION OF THE PROPOSED UTILITIES SHALL BE ADJUSTED IF NECESSAY.
7. THIS DRAWING IS GUIDANCE ONLY. THE DIMENSION AND LOCATION OF UTILITIES MAY BE ADJUSTED TO SUIT FOR THE FIELD CONDITION.
8. UNDERGROUND UTILITIES DUCT AND TRUNK MAIN WATER SUPPLY SHALL BE LOCATED ALTERNATIVELY.
9. HEIGHT OF ELECTRIC POLE SHALL BE NOT MORE THAN 22.00 M. OR WIDTH OF FOOTING SHALL BE NOT MORE THAN 1.10 M. FOR TYPICAL AS SHOWN ON THIS DRAWING.
10. CONSIDERATION FOR DISABLED PEDESTRIAN ,THE TYPE OF SPECIAL SIDEWALK SHALL BE IMPLEMENTED ACCORDING TO DWG. NO. EN–401, EN–402 AND EN–403
11. S1 = NORMAL CROSS SLOPE AS SHOWN ON THE TYPICAL CROSS–SECTION.
12. THE CROSS–SECTIONS AS SHOWN ON THIS DRAWING ARE GENERAL GUIDANCE ONLY. THE WIDTH OF SEPARATOR, FRONTAGE ROAD AND SIDEWALK SHALL BE ADOPT, IF CROSS–SECTION ELEMENTS HAVE TO BE ADAPTED FOR THE OTHERS PURPOSE , FOR EXAMPLE ; MORE WIDTH OF SERVICE ROAD REQUIREMENT, ADDITIONAL BICYCLE LANE, PEDESTRIAN FACILITIES FOR DISABLED PEDESTRIAN,REQUIREMENT FOR BUS STOP LAYOUT AND SHELTER.
13. IN CASE THE PROJECT ROAD HAS BEEN IMPROVED TO THE ULTIMATE STAGE,THE ADDITIONAL LANES SHALL BE EXPANDED INTO THE DEPRESSED MEDIAN AREA ON THE BOTH SIDES.
14. THE PAVEMENT STRUCTURES OF THE ROADWAY SHALL BE SPECIFIEDAS DESIGNED FOR EACH PROJECT.

REF.	REVISION	SIGNATURE	DATE

KINGDOM OF THAILAND

MINISTRY OF TRANSPORT

DEPARTMENT OF HIGHWAYS

STANDARD DRAWING

TYPICAL CROSS–SECTION FOR DIVIDED HIGHWAY

R.O.W. WIDTH 60.00 M.–I

DESIGNED : D.O.H. & CONSULTANTS	CHECKED : BUREAU OF LOCATION & DESIGN	DATE : OCT 2015
SUBMITTED : (DIRECTOR OF LOCATION & DESIGN BUREAU)		SCALE : AS SHOWN
APPROVED : (FOR DIRECTOR GENERAL)		DWG NO. TS–305
		SHEET NO. 10

D:\std dwg 2015\TS–305(REV00)

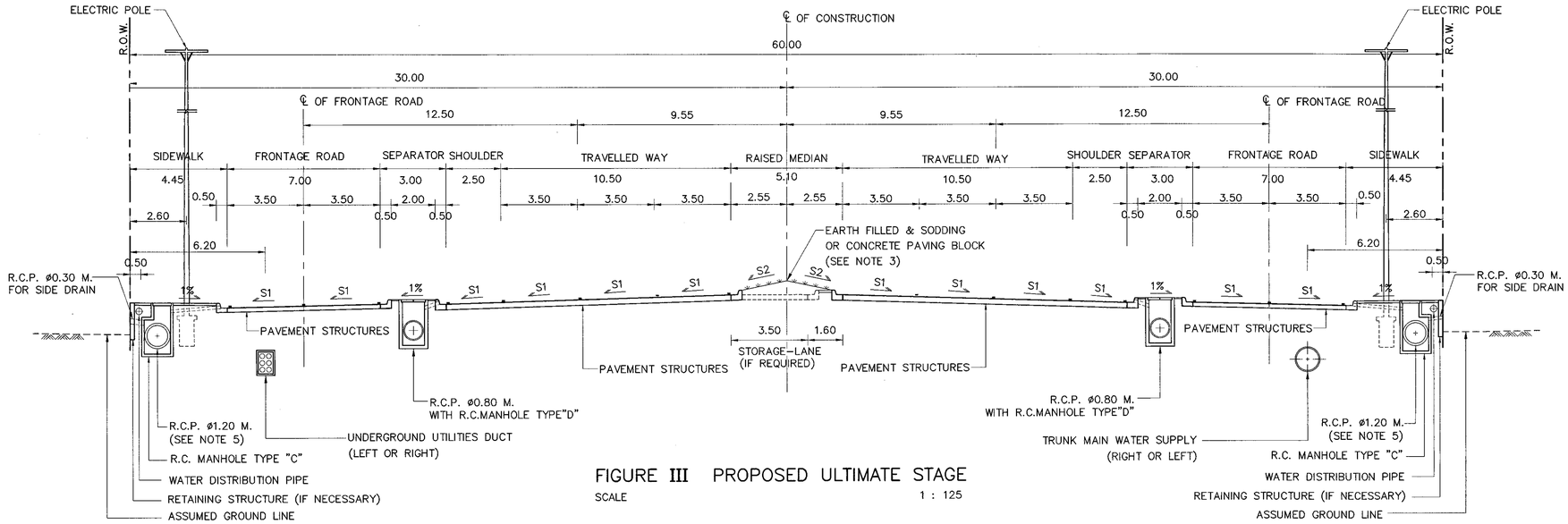

FIGURE III PROPOSED ULTIMATE STAGE

SCALE 1 : 125

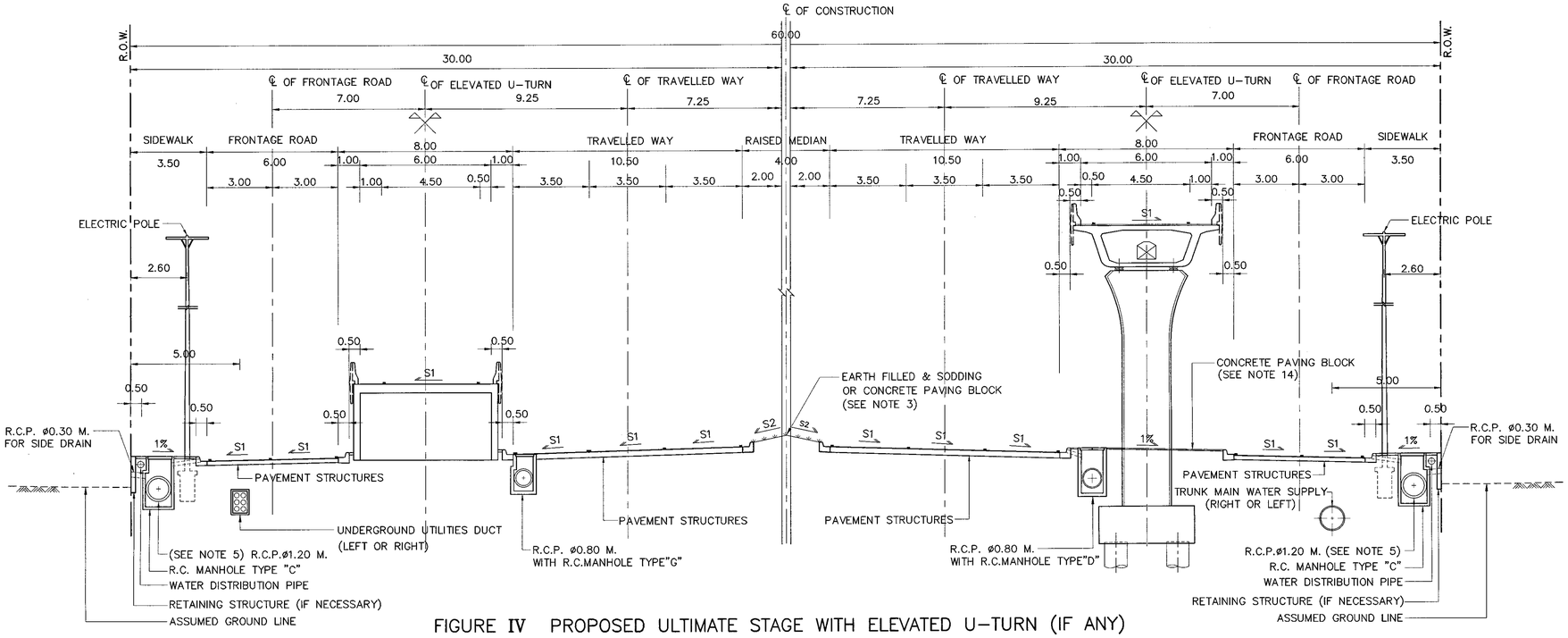

FIGURE IV PROPOSED ULTIMATE STAGE WITH ELEVATED U-TURN (IF ANY)

SCALE 1 : 125

NOTES:

1. ALL DIMENSIONS ARE IN METERS UNLESS OTHERWISE INDICATED.
2. THE ULTIMATE TYPICAL CROSS-SECTION SHALL BE USED INCASE THE LANDUSE BESIDE HIGHWAY IS THE DENSELY POPULATED AREA.
3. MEDIAN SURFACING SHALL BE AS SPECIFIED IN THE DRAWING OR AS DIRECTED BY THE ENGINEER.
4. WIDTH OF ROADWAY OR SIDEWALK SHALL BE ADJUSTED TO SUIT FOR THE IN SITU CONDITION SUCH AS UTILITIES LOCATION , DRAINAGE SYSTEM ETC.
5. THE LONGITUDINAL DRAIN PIPE AS SHOWN ON THIS DRAWING SHALL BE ENLARGED TO BOX CULVERT SIZE 1.20x1.20 M. OR MORE (NOT EXCEED 2.10x2.10 M.) IN CASE DRAINAGE REQUIREMENT IS EXCEEDING. IN ADDITION, IT'S SIZE SHALL BE REDUCED IN CASE DRAINAGE REQUIREMENT IS LOWER.
6. CRITERIA FOR UTILITIES LOCATION CONSIDERATION
   - 6.1 AS SHOWN ON THIS DRAWING UTILITIES SHALL BE LOCATED FOR NEW CONSTRUCTION HIGHWAYS OR NO EXISTING UTILITIES.
   - 6.2 WHEN THERE ARE EXISTING UTILITIES OR EXISTING ROADWAY,THE LOCATION OF THE PROPOSED UTILITIES SHALL BE ADJUSTED IF NECESSAY.
7. THIS DRAWING IS GUIDANCE ONLY. THE DIMENSION AND LOCATION OF UTILITIES MAY BE ADJUSTED TO SUIT FOR THE FIELD CONDITION.
8. UNDERGROUND UTILITIES DUCT AND TRUNK MAIN WATER SUPPLY SHALL BE LOCATED ALTERNATIVELY.
9. HEIGHT OF ELECTRIC POLE SHALL BE NOT MORE THAN 22.00 M. OR WIDTH OF FOOTING SHALL BE NOT MORE THAN 1.10 M. FOR TYPICAL AS SHOWN ON THIS DRAWING.
10. CONSIDERATION FOR DISABLED PEDESTRIAN ,THE TYPE OF SPECIAL SIDEWALK SHALL BE IMPLEMENTED ACCORDING TO DWG. NO. EN-401, EN-402 AND EN-403
11. S1 = NORMAL CROSS SLOPE AS SHOWN ON THE TYPICAL CROSS-SECTION.
    S2 = SLOPE OF THE MEDIAN SURFACE.
12. THE CROSS-SECTIONS AS SHOWN ON THIS DRAWING ARE GENERAL GUIDANCE ONLY. THE WIDTH OF SEPARATOR,FRONTAGE ROAD AND SIDEWALK SHALL BE ADOPT, IF CROSS-SECTION ELEMENTS HAVE TO BE ADAPTED FOR THE OTHERS PURPOSE , FOR EXAMPLE ; MORE WIDTH OF SERVICE ROAD REQUIREMENT, ADDITIONAL BICYCLE LANE, PEDESTRIAN FACILITIES FOR DISABLED PEDESTRIAN,REQUIREMENT FOR BUS STOP LAYOUT AND SHELTER.
13. CRITERIA FOR CONSIDERATION EXCLUSIVE BICYCLE LANE LOCATION.
    - 13.1 IN CASE THE PROPOSED BICYCLE LANE IS LOCATED ON THE FRONTAGE ROAD,THE SAFETY SEPARATING DEVICE IS NECESSARY AS DESIGNED OR DIRECTED BY THE ENGINEER.
    - 13.2 IN CASE THE PROPOSED BICYCLE LANE IS LOCATED SHARING THE SIDEWALK , THE LOCATION OF THE BICYCLE LANE SHALL BE SPECIFIED AS DIRECTED BY THE ENGINEER.
14. THE CONCRETE PAVING BLOCK SURFACING ON THE AREA UNDER ELEVATED U-TURN AS SHOWN ON THIS DRAWING IS GUIDANCE ONLY.THE OTHER SURFACINGS MAY BE SUBSTITUTED AS DIRECTED BY THE ENGINEER.
15. IN CASE THE PROJECT ROAD HAS BEEN IMPROVED TO THE ULTIMATE STAGE, THE ADDITIONAL LANES SHALL BE EXPANDED INTO THE DEPRESSED MEDIAN AREA ON THE BOTH SIDES.
16. THE PAVEMENT STRUCTURES OF THE ROADWAY SHALL BE SPECIFIED AS DESIGNED FOR EACH PROJECT.

REF.	REVISION	SIGNATURE	DATE

KINGDOM OF THAILAND

MINISTRY OF TRANSPORT

DEPARTMENT OF HIGHWAYS

STANDARD DRAWING

TYPICAL CROSS-SECTION FOR DIVIDED HIGHWAY R.O.W. WIDTH 60.00 M.-II

DESIGNED : D.O.H. & CONSULTANTS	CHECKED : BUREAU OF LOCATION & DESIGN	DATE : OCT 2015
SUBMITTED : (DIRECTOR OF LOCATION & DESIGN BUREAU)		SCALE : AS SHOWN
APPROVED : (FOR DIRECTOR GENERAL)		DWG NO. TS-306
		SHEET NO. 11

D:\std dwg 2015\TS-306(REV00)

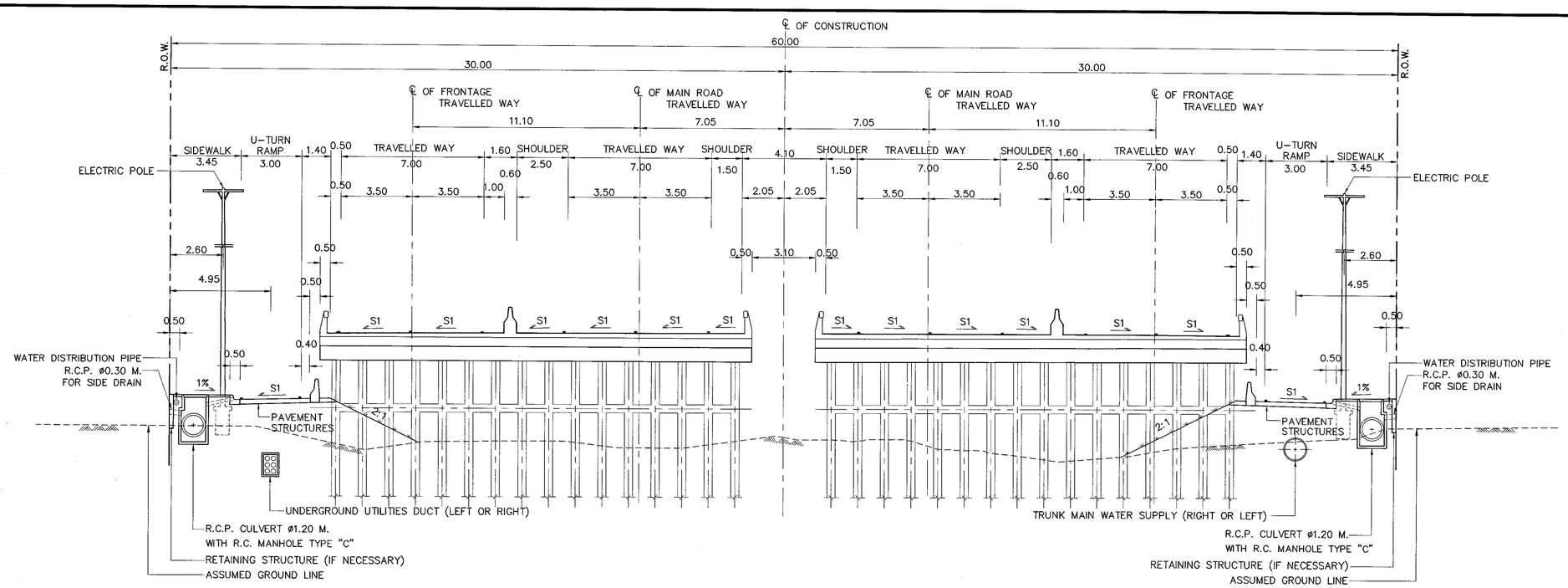

FIGURE V PROPOSED 4–LANE DIVIDED HIGHWAY WITH FRONTAGE BRIDGE AND U–TURN UNDER BRIDGES (IF ANY)

SCALE 1 : 125

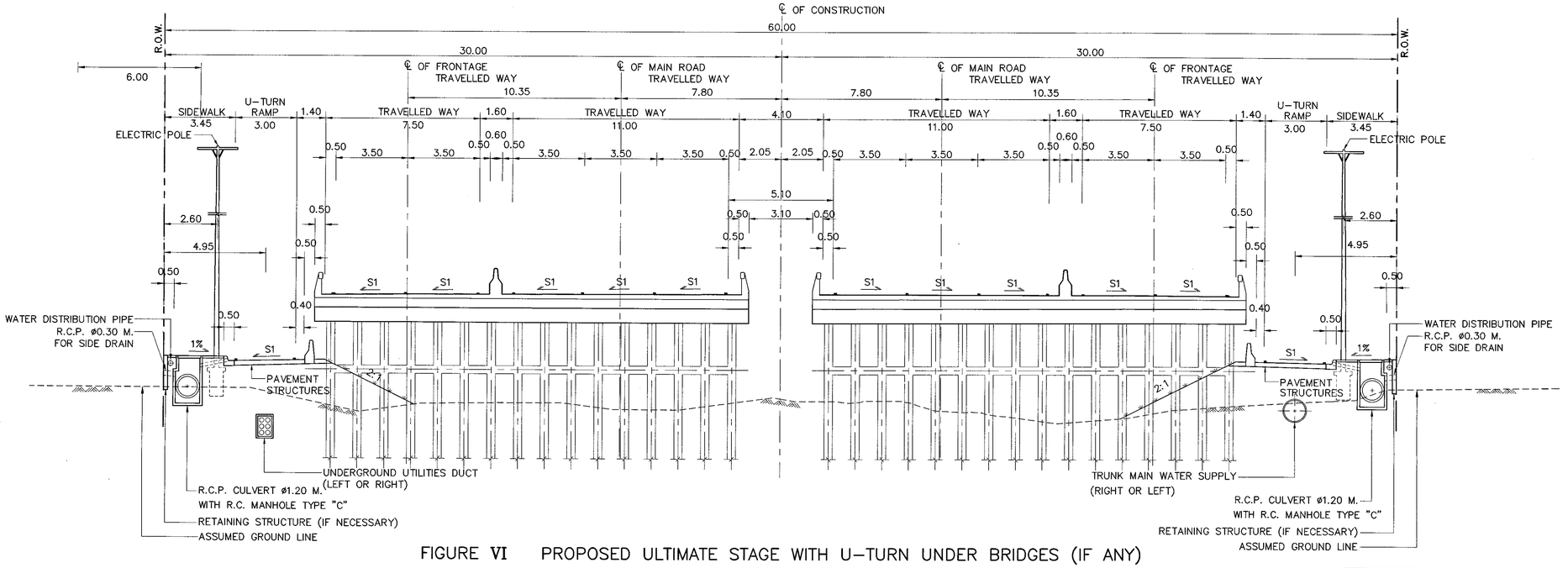

FIGURE VI PROPOSED ULTIMATE STAGE WITH U–TURN UNDER BRIDGES (IF ANY)

SCALE 1 : 125

NOTES:

1. ALL DIMENSIONS ARE IN METERS UNLESS OTHERWISE INDICATED.
2. S1 = NORMAL CROSS SLOPE AS SHOWN ON THE TYPICAL CROSS–SECTION.
3. CRITERIA FOR UTILITIES LOCATION CONSIDERATION
   - 3.1 AS SHOWN ON THIS DRAWING UTILITIES SHALL BE LOCATED FOR NEW CONSTRUCTION HIGHWAYS OR NO EXISTING UTILITIES.
   - 3.2 WHEN THERE ARE EXISTING UTILITIES OR EXISTING ROADWAY,THE LOCATION OF THE PROPOSED UTILITIES SHALL BE ADJUSTED IF NECESSAY.
4. THIS DRAWING IS GUIDANCE ONLY. THE DIMENSION AND LOCATION OF UTILITIES MAY BE ADJUSTED TO SUIT FOR THE FIELD CONDITION.
5. UNDERGROUND UTILITIES DUCT AND TRUNK MAIN WATER SUPPLY SHALL BE LOCATED ALTERNATIVELY.
6. HEIGHT OF ELECTRIC POLE SHALL BE NOT MORE THAN 22.00 M. OR WIDTH OF FOOTING
7. SHALL BE NOT MORE THAN 1.10 M. FOR TYPICAL AS SHOWN ON THIS DRAWING.
8. THE ELEMENT OF THE CROSS SECTION SHOWN COULD BE ADJUSTED ACCORDING TO DIFFERENT DESIGN FUNCTIONS.
9. THE PAVEMENT STRUCTURES OF THE ROADWAY SHALL BE SPECIFIED AS DESIGNED FOR EACH PROJECT.

REF.	REVISION	SIGNATURE	DATE

KINGDOM OF THAILAND

MINISTRY OF TRANSPORT
DEPARTMENT OF HIGHWAYS

STANDARD DRAWING

TYPICAL CROSS–SECTION FOR DIVIDED HIGHWAY R.O.W. WIDTH 60.00 M.–III

DESIGNED : D.O.H. & CONSULTANTS	CHECKED : BUREAU OF LOCATION & DESIGN	DATE : OCT 2015
SUBMITTED : (DIRECTOR OF LOCATION & DESIGN BUREAU)		SCALE : AS SHOWN
APPROVED : (FOR DIRECTOR GENERAL)		DWG NO. TS–307
		SHEET NO. 12

D:\std dwg 2015\TS-307(REV00)

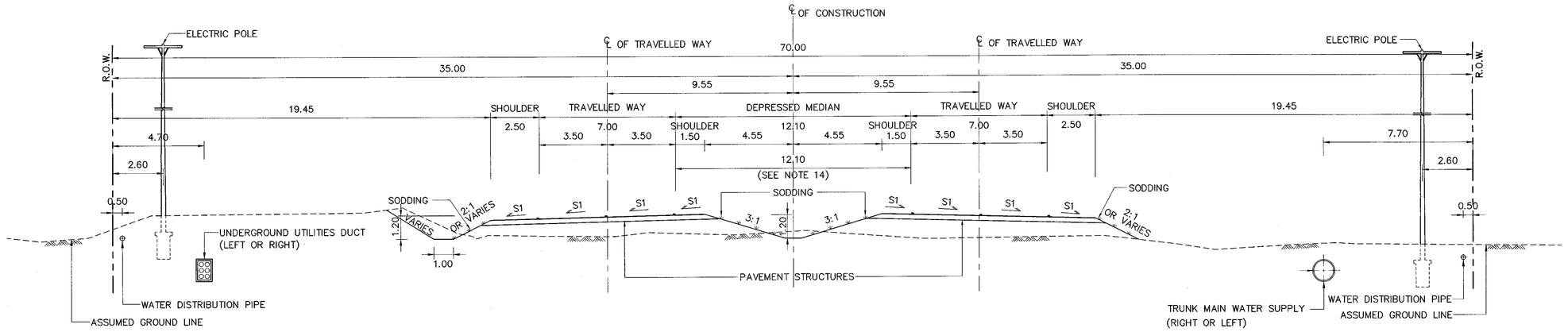

FIGURE I PROPOSED 4–LANE DIVIDED HIGHWAY

SCALE 1 : 125

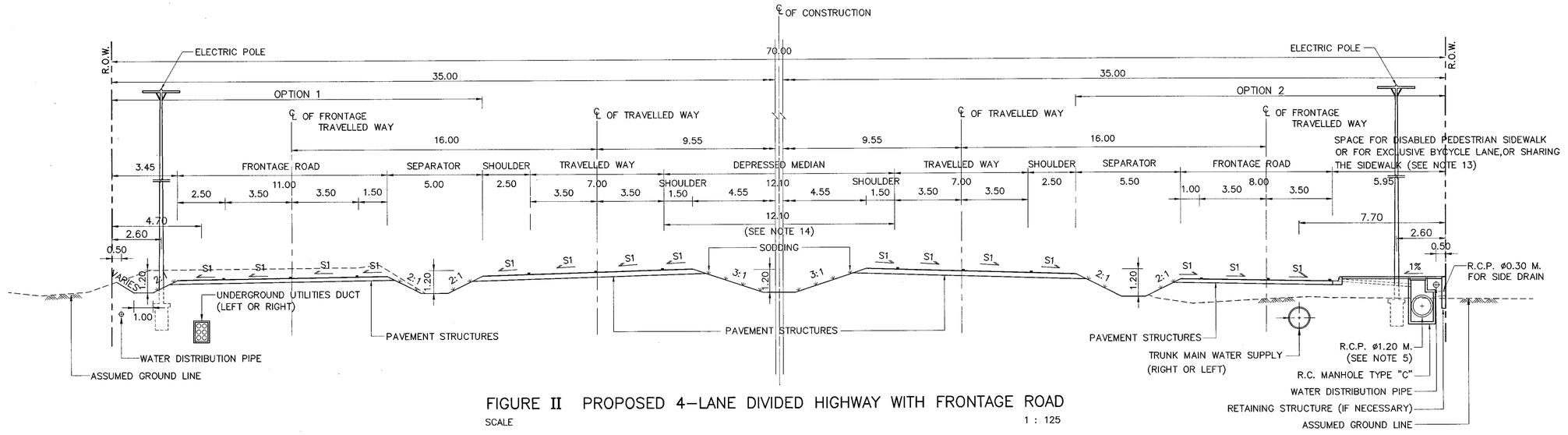

FIGURE II PROPOSED 4–LANE DIVIDED HIGHWAY WITH FRONTAGE ROAD

SCALE 1 : 125

NOTES:

1. ALL DIMENSIONS ARE IN METERS UNLESS OTHERWISE INDICATED.
2. IN FIRST STAGE ,THE LOCATION OF 2–LANE HIGHWAY CONSTRUCTION SHALL BE LOCATED ON EITHER LEFT OR RIGHT 2–LANE ROAD OF PROPOSED 4–LANE DIVIDED HIGHWAY AS SHOWN ON THIS DRAWINGS.
3. THE INVERT OF SIDE DITCH SHALL BE LOWER THAN THE PROFILE GRADE TO 1.20 M. MOREOVER, THESE INVERT ELEVATION SHALL BE ADJUSTED IN THE FIELD TO SUIT FOR ACTUAL SUCCESSIVE FLOW.
4. WIDTH OF ROADWAY OR SIDEWALK SHALL BE ADJUSTED TO SUIT FOR THE IN SITU CONDITION SUCH AS UTILITIES LOCATION , DRAINAGE SYSTEM ETC.
5. THE LONGITUDINAL DRAIN PIPE AS SHOWN ON THIS DRAWING SHALL BE ENLARGED TO BOX CULVERT SIZE 1.20x1.20 M. OR MORE (NOT EXCEED 2.10x2.10 M.) IN CASE DRAINAGE REQUIREMENT IS EXCEEDING. IN ADDITION, IT'S SIZE SHALL BE REDUCED IN CASE DRAINAGE REQUIREMENT IS LOWER.
6. CRITERIA FOR UTILITIES LOCATION CONSIDERATION
   - 6.1 AS SHOWN ON THIS DRAWING UTILITIES SHALL BE LOCATED FOR NEW CONSTRUCTION HIGHWAYS OR NO EXISTING UTILITIES.
   - 6.2 WHEN THERE ARE EXISTING UTILITIES OR EXISTING ROADWAY,THE LOCATION OF THE PROPOSED UTILITIES SHALL BE ADJUSTED IF NECESSAY.
7. THIS DRAWING IS GUIDANCE ONLY. THE DIMENSION AND LOCATION OF UTILITIES MAY BE ADJUSTED TO SUIT FOR THE FIELD CONDITION.
8. UNDERGROUND UTILITIES DUCT AND TRUNK MAIN WATER SUPPLY SHALL BE LOCATED ALTERNATIVELY.
9. HEIGHT OF ELECTRIC POLE SHALL BE NOT MORE THAN 22.00 M. OR WIDTH OF FOOTING SHALL BE NOT MORE THAN 1.10 M. FOR TYPICAL AS SHOWN ON THIS DRAWING.
10. CONSIDERATION FOR DISABLED PEDESTRIAN ,THE TYPE OF SPECIAL SIDEWALK SHALL BE IMPLEMENTED ACCORDING TO DWG. NO. EN–401, EN–402 AND EN–403
11. S1 = NORMAL CROSS SLOPE AS SHOWN ON THE TYPICAL CROSS–SECTION.
12. THE CROSS–SECTIONS AS SHOWN ON THIS DRAWING ARE GENERAL GUIDANCE ONLY. THE WIDTH OF SEPARATOR,FRONTAGE ROAD AND SIDEWALK SHALL BE ADOPT, IF CROSS–SECTION ELEMENTS HAVE TO BE ADAPTED FOR THE OTHERS PURPOSE , FOR EXAMPLE ; MORE WIDTH OF SERVICE ROAD REQUIREMENT, ADDITIONAL BICYCLE LANE, PEDESTRIAN FACILITIES FOR DISABLED PEDESTRIAN,REQUIREMENT FOR BUS STOP LAYOUT AND SHELTER.
13. CRITERIA FOR CONSIDERATION EXCLUSIVE BICYCLE LANE LOCATION.
    - 13.1 INCASE THE PROPOSED BICYCLE LANE IS LOCATED ON THE FRONTAGE ROAD,THE SAFETY SEPARATING DEVICE IS NECESSARY AS DESIGNED OR DIRECTED BY THE ENGINEER.
    - 13.2 INCASE THE PROPOSED BICYCLE LANE IS LOCATED SHARING THE SIDEWALK , THE LOCATION OF THE BICYCLE LANE SHALL BE SPECIFIED AS DIRECTED BY THE ENGINEER.
14. IN CASE THE PROJECT ROAD HAS BEEN IMPROVED TO THE ULTIMATE STAGE,THE ADDITIONAL LANES SHALL BE EXPANDED INTO THE DEPRESSED MEDIAN AREA ON THE BOTH SIDES.
15. THE PAVEMENT STRUCTURES OF THE ROADWAY SHALL BE SPECIFIEDAS DESIGNED FOR EACH PROJECT.

REF.	REVISION	SIGNATURE	DATE

KINGDOM OF THAILAND

MINISTRY OF TRANSPORT

DEPARTMENT OF HIGHWAYS

STANDARD DRAWING

TYPICAL CROSS–SECTION FOR DIVIDED HIGHWAY

R.O.W. WIDTH 70.00 M.–I

DESIGNED : D.O.H. & CONSULTANTS	CHECKED : BUREAU OF LOCATION & DESIGN	DATE : OCT 2015
SUBMITTED : (DIRECTOR OF LOCATION & DESIGN BUREAU)		SCALE : AS SHOWN
APPROVED : (FOR DIRECTOR GENERAL)		DWG NO. TS–308
		SHEET NO. 13

D:\std dwg 2015\TS-308(REV00)

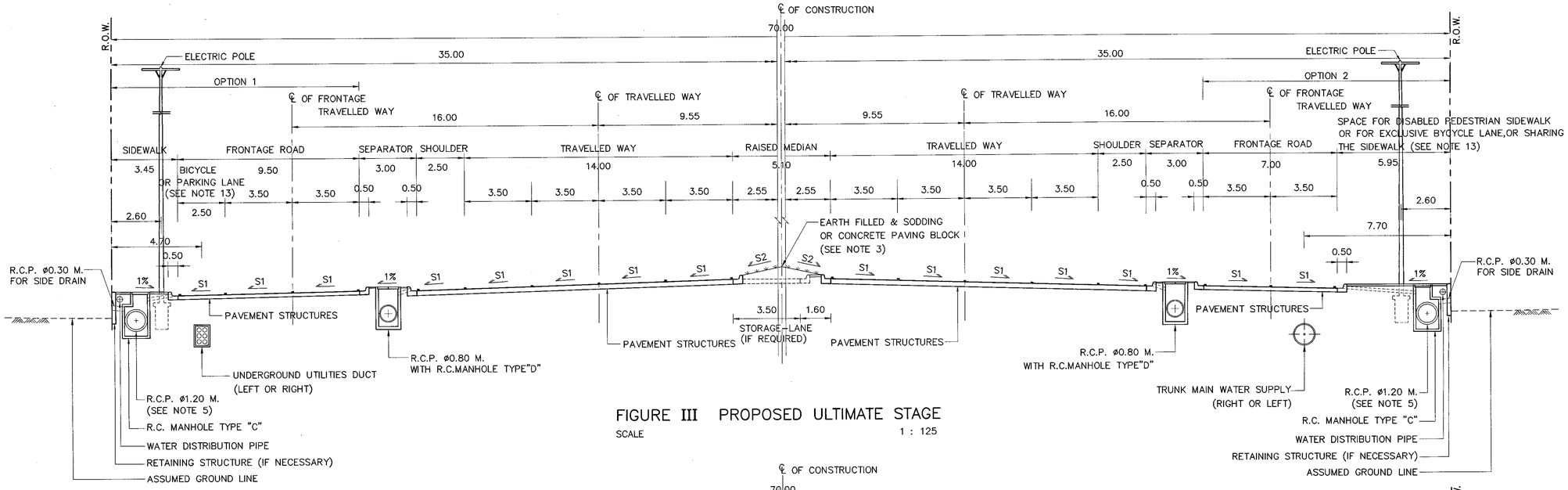

FIGURE III PROPOSED ULTIMATE STAGE

SCALE 1 : 125

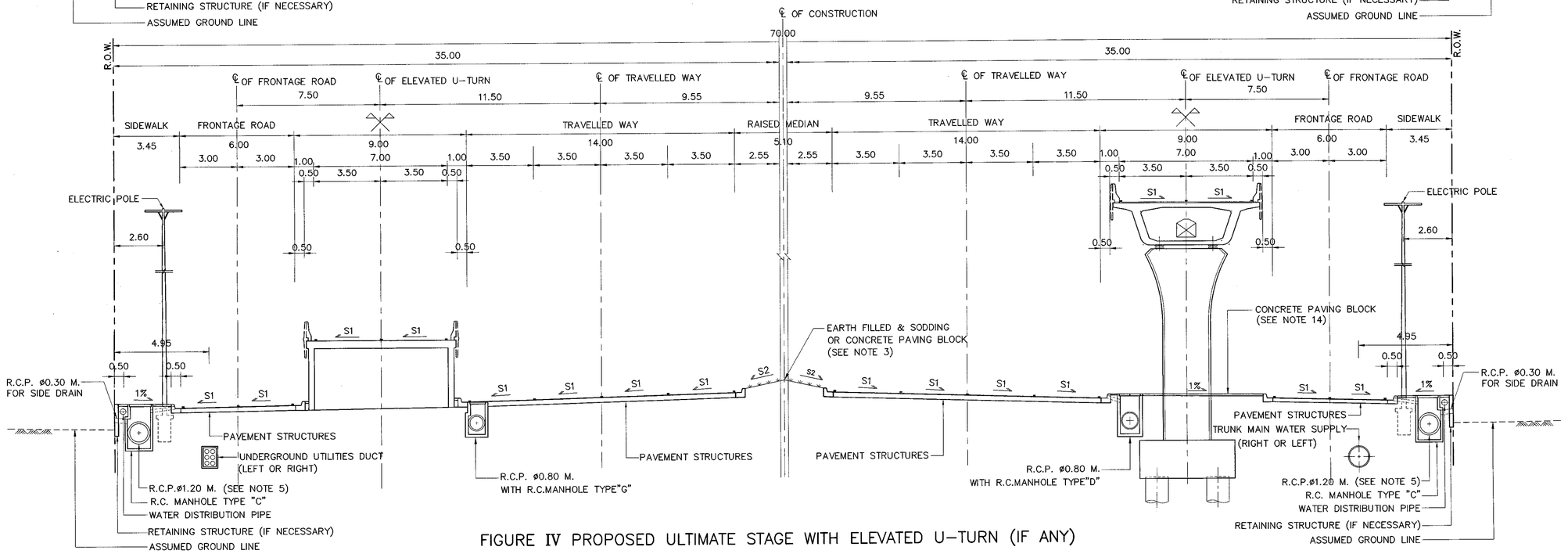

FIGURE IV PROPOSED ULTIMATE STAGE WITH ELEVATED U-TURN (IF ANY)

SCALE 1 : 125

NOTES:

1. ALL DIMENSIONS ARE IN METERS UNLESS OTHERWISE INDICATED.
2. THE ULTIMATE TYPICAL CROSS-SECTION SHALL BE USED INCASE THE LANDUSE BESIDE HIGHWAY IS THE DENSELY POPULATED AREA.
3. MEDIAN SURFACING SHALL BE AS SPECIFIED IN THE DRAWING OR AS DIRECTED BY THE ENGINEER.
4. WIDTH OF ROADWAY OR SIDEWALK SHALL BE ADJUSTED TO SUIT FOR THE IN SITU CONDITION SUCH AS UTILITIES LOCATION , DRAINAGE SYSTEM ETC.
5. THE LONGITUDINAL DRAIN PIPE AS SHOWN ON THIS DRAWING SHALL BE ENLARGED TO BOX CULVERT SIZE 1.20x1.20 M. OR MORE (NOT EXCEED 2.10x2.10 M.) IN CASE DRAINAGE REQUIREMENT IS EXCEEDING. IN ADDITION, IT'S SIZE SHALL BE REDUCED IN CASE DRAINAGE REQUIREMENT IS LOWER.
6. CRITERIA FOR UTILITIES LOCATION CONSIDERATION
   - 6.1 AS SHOWN ON THIS DRAWING UTILITIES SHALL BE LOCATED FOR NEW CONSTRUCTION HIGHWAYS OR NO EXISTING UTILITIES.
   - 6.2 WHEN THERE ARE EXISTING UTILITIES OR EXISTING ROADWAY,THE LOCATION OF THE PROPOSED UTILITIES SHALL BE ADJUSTED IF NECESSAY.
7. THIS DRAWING IS GUIDANCE ONLY. THE DIMENSION AND LOCATION OF UTILITIES MAY BE ADJUSTED TO SUIT FOR THE FIELD CONDITION.
8. UNDERGROUND UTILITIES DUCT AND TRUNK MAIN WATER SUPPLY SHALL BE LOCATED ALTERNATIVELY.
9. HEIGHT OF ELECTRIC POLE SHALL BE NOT MORE THAN 22.00 M. OR WIDTH OF FOOTING SHALL BE NOT MORE THAN 1.10 M. FOR TYPICAL AS SHOWN ON THIS DRAWING.
10. CONSIDERATION FOR DISABLED PEDESTRIAN ,THE TYPE OF SPECIAL SIDEWALK SHALL BE IMPLEMENTED ACCORDING TO DWG. NO. EN-401, EN-402 AND EN-403
11. S1 = NORMAL CROSS SLOPE AS SHOWN ON THE TYPICAL CROSS-SECTION.
    S2 = SLOPE OF THE MEDIAN SURFACE.
12. THE CROSS-SECTIONS AS SHOWN ON THIS DRAWING ARE GENERAL GUIDANCE ONLY. THE WIDTH OF SEPARATOR,FRONTAGE ROAD AND SIDEWALK SHALL BE ADOPT, IF CROSS-SECTION ELEMENTS HAVE TO BE ADAPTED FOR THE OTHERS PURPOSE , FOR EXAMPLE ; MORE WIDTH OF SERVICE ROAD REQUIREMENT, ADDITIONAL BICYCLE LANE, PEDESTRIAN FACILITIES FOR DISABLED DISABLED PEDESTRIAN,REQUIREMENT FOR BUS STOP LAYOUT AND SHELTER.
13. CRITERIA FOR CONSIDERATION EXCLUSIVE BICYCLE LANE LOCATION.
    - 13.1 INCASE THE PROPOSED BICYCLE LANE IS LOCATED ON THE FRONTAGE ROAD,THE SAFETY SEPARATING DEVICE IS NECESSARY AS DESIGNED OR DIRECTED BY THE ENGINEER.
    - 13.2 INCASE THE PROPOSED BICYCLE LANE IS LOCATED SHARING THE SIDEWALK , THE LOCATION OF THE BICYCLE LANE SHALL BE SPECIFIED AS DIRECTED BY THE ENGINEER.
14. THE CONCRETE PAVING BLOCK SURFACING ON THE AREA UNDER ELEVATED U-TURN AS SHOWN ON THIS DRAWING IS GUIDANCE ONLY.THE OTHER SURFACINGS MAY BE SUBSTITUTED AS DIRECTED BY THE ENGINEER.
15. THE PAVEMENT STRUCTURES OF THE ROADWAY SHALL BE SPECIFIED AS DESIGNED FOR EACH PROJECT.

REF.	REVISION	SIGNATURE	DATE

KINGDOM OF THAILAND

MINISTRY OF TRANSPORT

DEPARTMENT OF HIGHWAYS

STANDARD DRAWING

TYPICAL CROSS-SECTION FOR DIVIDED HIGHWAY
R.O.W. WIDTH 70.00 M.-II

DESIGNED : D.O.H. & CONSULTANTS	CHECKED : BUREAU OF LOCATION & DESIGN	DATE : OCT 2015
SUBMITTED : (DIRECTOR OF LOCATION & DESIGN BUREAU)		SCALE : AS SHOWN
		DWG NO. TS-309
APPROVED : (FOR DIRECTOR GENERAL)		SHEET NO. 14

D:\std dwg 2015\TS-309(REV00)

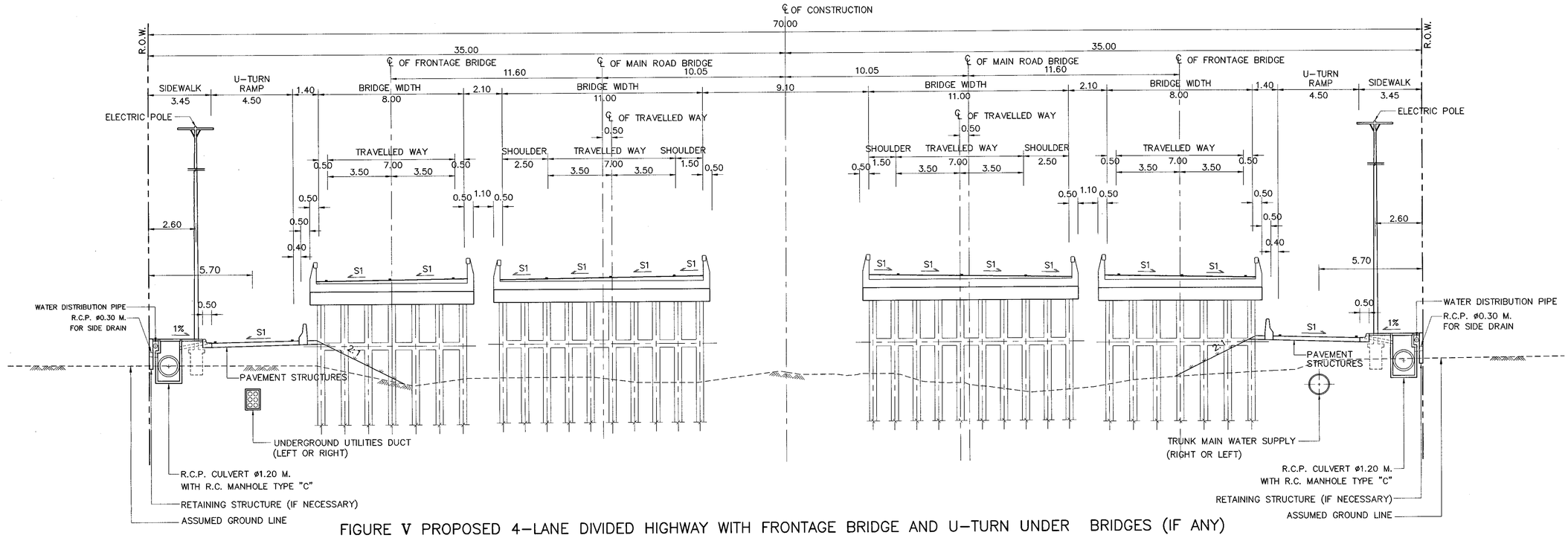

FIGURE V PROPOSED 4-LANE DIVIDED HIGHWAY WITH FRONTAGE BRIDGE AND U-TURN UNDER BRIDGES (IF ANY)

SCALE 1 : 125

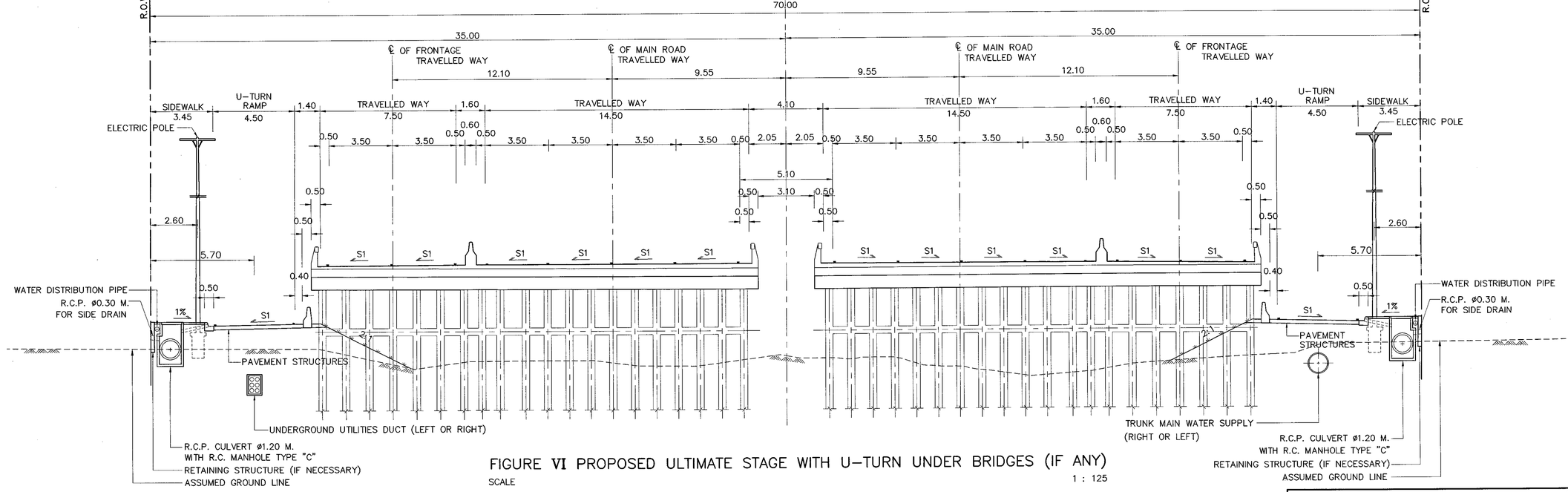

FIGURE VI PROPOSED ULTIMATE STAGE WITH U-TURN UNDER BRIDGES (IF ANY)

SCALE 1 : 125

NOTES:

1. ALL DIMENSIONS ARE IN METERS UNLESS OTHERWISE INDICATED.
2. S1 = NORMAL CROSS SLOPE AS SHOWN ON THE TYPICAL CROSS-SECTION.
3. CRITERIA FOR UTILITIES LOCATION CONSIDERATION
   - 3.1 AS SHOWN ON THIS DRAWING UTILITIES SHALL BE LOCATED FOR NEW CONSTRUCTION HIGHWAYS OR NO EXISTING UTILITIES.
   - 3.2 WHEN THERE ARE EXISTING UTILITIES OR EXISTING ROADWAY,THE LOCATION OF THE PROPOSED UTILITIES SHALL BE ADJUSTED IF NECESSAY.
4. THIS DRAWING IS GUIDANCE ONLY. THE DIMENSION AND LOCATION OF UTILITIES MAY BE ADJUSTED TO SUIT FOR THE FIELD CONDITION.
5. UNDERGROUND UTILITIES DUCT AND TRUNK MAIN WATER SUPPLY SHALL BE LOCATED ALTERNATIVELY.
6. HEIGHT OF ELECTRIC POLE SHALL BE NOT MORE THAN 22.00 M. OR WIDTH OF FOOTING SHALL BE NOT MORE THAN 1.10 M. FOR TYPICAL AS SHOWN ON THIS DRAWING.
7. THE ELEMENT OF THE CROSS SECTION SHOWN COULD BE ADJUSTED ACCORDING TO DIFFERENT DESIGN FUNCTIONS.
8. THE INNER SHOULDER OF MAIN ROAD BRIDGE (1.50 M.WIDTH) AS SHOWN ON FIGURE V IS FOR THE STANDARD HIGHWAY CLASS.THESE MAY BE ENLARGED TO 2.50 M. WIDTH IN CASE OF CONSIDERING THE MAIN ROAD BRIDGE TO BE 6-LANE ROADWAY IN THE FUTURE (EACH BRIDGE CARRY 3 LANES) WITHOUT ANY FURTHER WIDENING OF THE BRIDGE STRUCTURE.
9. THE PAVEMENT STRUCTURES OF THE ROADWAY SHALL BE SPECIFIED AS DESIGNED FOR EACH PROJECT.

REF.	REVISION	SIGNATURE	DATE

KINGDOM OF THAILAND

MINISTRY OF TRANSPORT

DEPARTMENT OF HIGHWAYS

STANDARD DRAWING

TYPICAL CROSS-SECTION FOR DIVIDED HIGHWAY
R.O.W. WIDTH 70.00 M.-III

DESIGNED : D.O.H. & CONSULTANTS	CHECKED : BUREAU OF LOCATION & DESIGN	DATE : OCT 2015
SUBMITTED : (DIRECTOR OF LOCATION & DESIGN BUREAU)		SCALE : AS SHOWN
APPROVED : (FOR DIRECTOR GENERAL)		DWG NO. TS-310
		SHEET NO. 15

D:\std dwg 2015\TS-310(REV00)

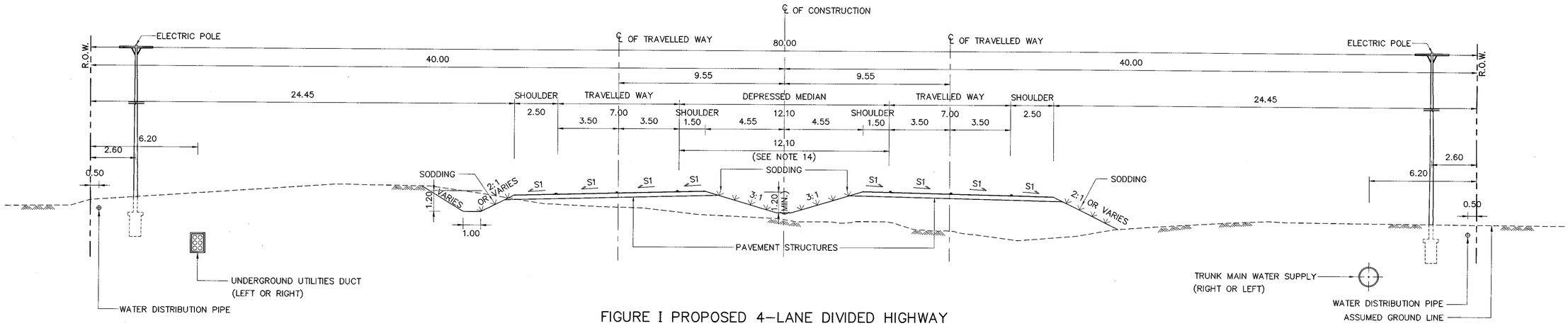

FIGURE I PROPOSED 4–LANE DIVIDED HIGHWAY

SCALE 1 : 125

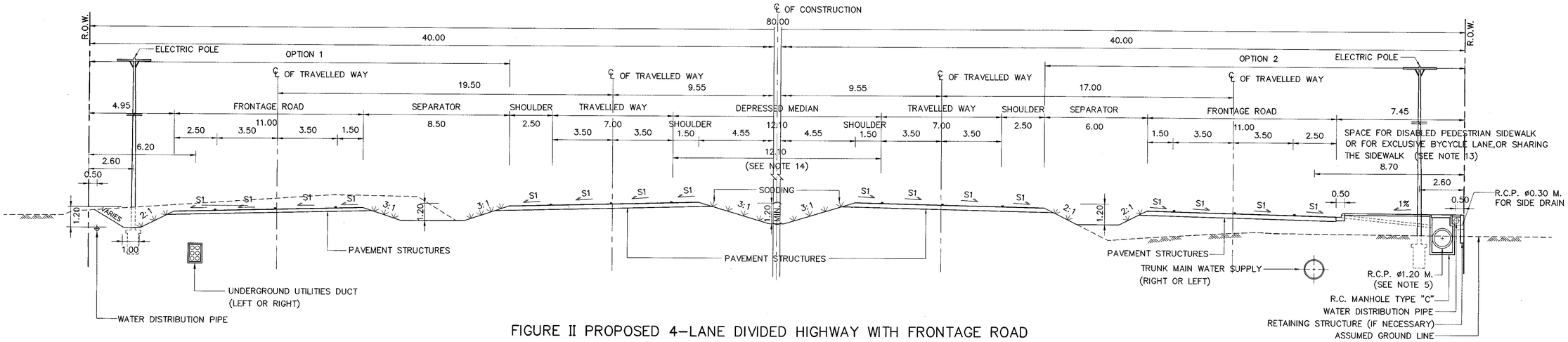

FIGURE II PROPOSED 4–LANE DIVIDED HIGHWAY WITH FRONTAGE ROAD

SCALE 1 : 125

NOTES:

1. ALL DIMENSIONS ARE IN METERS UNLESS OTHERWISE INDICATED.
2. IN FIRST STAGE ,THE LOCATION OF 2–LANE HIGHWAY CONSTRUCTION SHALL BE LOCATED ON EITHER LEFT OR RIGHT 2–LANE ROAD OF PROPOSED 4–LANE DIVIDED HIGHWAY AS SHOWN ON THIS DRAWINGS.
3. THE INVERT OF SIDE DITCH SHALL BE LOWER THAN THE PROFILE GRADE TO 1.20 M. MOREOVER, THESE INVERT ELEVATION SHALL BE ADJUSTED IN THE FIELD TO SUIT FOR ACTUAL SUCCESSIVE FLOW.
4. WIDTH OF ROADWAY OR SIDEWALK SHALL BE ADJUSTED TO SUIT FOR THE IN SITU CONDITION SUCH AS UTILITIES LOCATION , DRAINAGE SYSTEM ETC.
5. THE LONGITUDINAL DRAIN PIPE AS SHOWN ON THIS DRAWING SHALL BE ENLARGED TO BOX CULVERT SIZE 1.20x1.20 M. OR MORE (NOT EXCEED 2.10x2.10 M.) IN CASE DRAINAGE REQUIREMENT IS EXCEEDING. IN ADDITION, IT'S SIZE SHALL BE REDUCED IN CASE DRAINAGE REQUIREMENT IS LOWER.
6. CRITERIA FOR UTILITIES LOCATION CONSIDERATION
   - 6.1 AS SHOWN ON THIS DRAWING UTILITIES SHALL BE LOCATED FOR NEW CONSTRUCTION HIGHWAYS OR NO EXISTING UTILITIES.
   - 6.2 WHEN THERE ARE EXISTING UTILITIES OR EXISTING ROADWAY,THE LOCATION OF THE PROPOSED UTILITIES SHALL BE ADJUSTED IF NECESSAY.
7. THIS DRAWING IS GUIDANCE ONLY. THE DIMENSION AND LOCATION OF UTILITIES MAY BE ADJUSTED TO SUIT FOR THE FIELD CONDITION.
8. UNDERGROUND UTILITIES DUCT AND TRUNK MAIN WATER SUPPLY SHALL BE LOCATED ALTERNATIVELY.
9. HEIGHT OF ELECTRIC POLE SHALL BE NOT MORE THAN 22.00 M. OR WIDTH OF FOOTING SHALL BE NOT MORE THAN 1.10 M. FOR TYPICAL AS SHOWN ON THIS DRAWING.
10. CONSIDERATION FOR DISABLED PEDESTRIAN ,THE TYPE OF SPECIAL SIDEWALK SHALL BE IMPLEMENTED ACCORDING TO DWG. NO. EN–401, EN–402 AND EN–403
11. S1 = NORMAL CROSS SLOPE AS SHOWN ON THE TYPICAL CROSS–SECTION.
12. THE CROSS–SECTIONS AS SHOWN ON THIS DRAWING ARE GENERAL GUIDANCE ONLY. THE WIDTH OF SEPARATOR,FRONTAGE ROAD AND SIDEWALK SHALL BE ADOPT, IF CROSS–SECTION ELEMENTS HAVE TO BE ADAPTED FOR THE OTHERS PURPOSE, FOR EXAMPLE ; MORE WIDTH OF SERVICE ROAD REQUIREMENT, ADDITIONAL BICYCLE LANE, PEDESTRIAN FACILITIES FOR DISABLED FOR DISABLED PEDESTRIAN, REQUIREMENT FOR BUS STOP LAYOUT AND SHELTER.
13. CRITERIA FOR CONSIDERATION EXCLUSIVE BICYCLE LANE LOCATION.
    - 13.1 INCASE THE PROPOSED BICYCLE LANE IS LOCATED ON THE FRONTAGE ROAD,THE SAFETY SEPARATING DEVICE IS NECESSARY AS DESIGNED OR DIRECTED BY THE ENGINEER.
    - 13.2 INCASE THE PROPOSED BICYCLE LANE IS LOCATED SHARING THE SIDEWALK , THE LOCATION OF THE BICYCLE LANE SHALL BE SPECIFIED AS DIRECTED BY THE ENGINEER.
14. IN CASE THE PROJECT ROAD HAS BEEN IMPROVED TO THE ULTIMATE STAGE, THE ADDITIONAL LANES SHALL BE EXPANDED INTO THE DEPRESSED MEDIAN AREA ON THE BOTH SIDES.
15. THE PAVEMENT STRUCTURES OF THE ROADWAY SHALL BE SPECIFIED AS DESIGNED FOR EACH PROJECT.

REF.	REVISION	SIGNATURE	DATE

KINGDOM OF THAILAND

MINISTRY OF TRANSPORT

DEPARTMENT OF HIGHWAYS

STANDARD DRAWING

TYPICAL CROSS–SECTION FOR DIVIDED HIGHWAY R.O.W. WIDTH 80.00 M.–I

DESIGNED : D.O.H. & CONSULTANTS	**CHECKED :** BUREAU OF LOCATION & DESIGN	**DATE :** OCT 2015
SUBMITTED : (DIRECTOR OF LOCATION & DESIGN BUREAU)		**SCALE :** AS SHOWN
APPROVED : (FOR DIRECTOR GENERAL)		**DWG NO.** TS–311
		SHEET NO. 16

D:\std dwg 2015\TS-311(REV00)

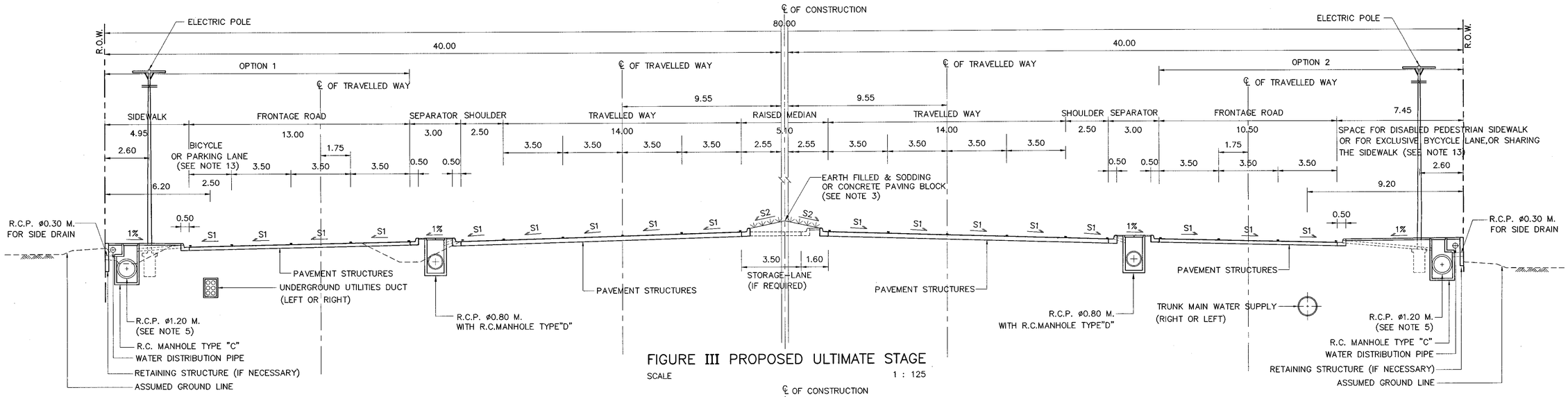

FIGURE III PROPOSED ULTIMATE STAGE

SCALE 1 : 125

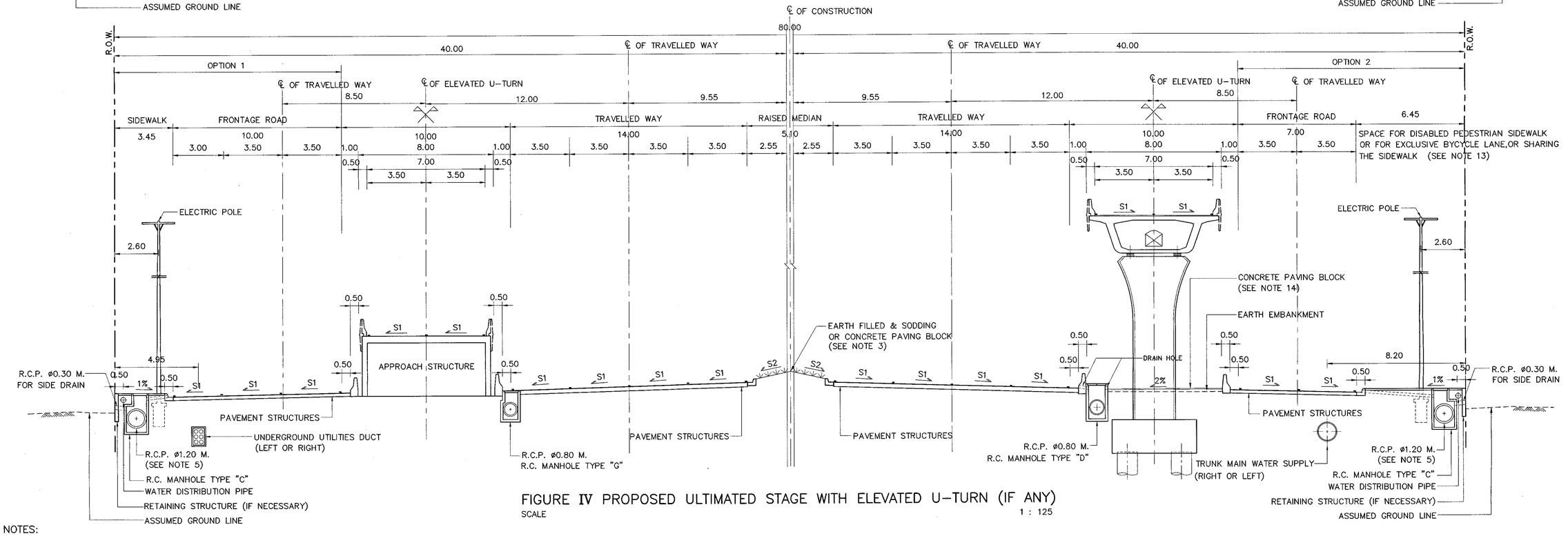

FIGURE IV PROPOSED ULTIMATED STAGE WITH ELEVATED U-TURN (IF ANY)

SCALE 1 : 125

NOTES:

1. ALL DIMENSIONS ARE IN METERS UNLESS OTHERWISE INDICATED.
2. THE ULTIMATE TYPICAL CROSS-SECTION SHALL BE USED INCASE THE LANDUSE BESIDE HIGHWAY IS THE DENSELY POPULATED AREA.
3. MEDIAN SURFACING SHALL BE AS SPECIFIED IN THE DRAWING OR AS DIRECTED BY THE ENGINEER.
4. WIDTH OF ROADWAY OR SIDEWALK SHALL BE ADJUSTED TO SUIT FOR THE IN SITU CONDITION SUCH AS UTILITIES LOCATION, DRAINAGE SYSTEM ETC.
5. THE LONGITUDINAL DRAIN PIPE AS SHOWN ON THIS DRAWING SHALL BE ENLARGED TO BOX CULVERT SIZE 1.20x1.20 M. OR MORE (NOT EXCEED 2.10x2.10 M.) IN CASE DRAINAGE REQUIREMENT IS EXCEEDING. IN ADDITION, IT'S SIZE SHALL BE REDUCED IN CASE DRAINAGE REQUIREMENT IS LOWER.
6. CRITERIA FOR UTILITIES LOCATION CONSIDERATION
   - 6.1 AS SHOWN ON THIS DRAWING UTILITIES SHALL BE LOCATED FOR NEW CONSTRUCTION HIGHWAYS OR NO EXISTING UTILITIES.
   - 6.2 WHEN THERE ARE EXISTING UTILITIES OR EXISTING ROADWAY, THE LOCATION OF THE PROPOSED UTILITIES SHALL BE ADJUSTED IF NECESSAY.
7. THIS DRAWING IS GUIDANCE ONLY. THE DIMENSION AND LOCATION OF UTILITIES MAY BE ADJUSTED TO SUIT FOR THE FIELD CONDITION.
8. UNDERGROUND UTILITIES DUCT AND TRUNK MAIN WATER SUPPLY SHALL BE LOCATED ALTERNATIVELY.
9. HEIGHT OF ELECTRIC POLE SHALL BE NOT MORE THAN 22.00 M. OR WIDTH OF FOOTING SHALL BE NOT MORE THAN 1.10 M. FOR TYPICAL AS SHOWN ON THIS DRAWING.
10. CONSIDERATION FOR DISABLED PEDESTRIAN, THE TYPE OF SPECIAL SIDEWALK SHALL BE IMPLEMENTED ACCORDING TO DWG. NO. EN-401, EN-402 AND EN-403
11. S1 = NORMAL CROSS SLOPE AS SHOWN ON THE TYPICAL CROSS-SECTION.
    S2 = SLOPE OF THE MEDIAN SURFACE.
12. THE CROSS-SECTIONS AS SHOWN ON THIS DRAWING ARE GENERAL GUIDANCE ONLY. THE WIDTH OF SEPARATOR, FRONTAGE ROAD AND SIDEWALK SHALL BE ADOPT, IF CROSS-SECTION ELEMENTS HAVE TO BE ADAPTED FOR THE OTHERS PURPOSE, FOR EXAMPLE ; MORE WIDTH OF SERVICE ROAD REQUIREMENT, ADDITIONAL BICYCLE LANE, PEDESTRIAN FACILITIES FOR DISABLED PEDESTRIAN, REQUIREMENT FOR BUS STOP LAYOUT AND SHELTER.
13. CRITERIA FOR CONSIDERATION EXCLUSIVE BICYCLE LANE LOCATION.
    - 13.1 INCASE THE PROPOSED BICYCLE LANE IS LOCATED ON THE FRONTAGE ROAD, THE SAFETY SEPARATING DEVICE IS NECESSARY AS DESIGNED OR DIRECTED BY THE ENGINEER.
    - 13.2 INCASE THE PROPOSED BICYCLE LANE IS LOCATED SHARING THE SIDEWALK, THE LOCATION OF THE BICYCLE LANE SHALL BE SPECIFIED AS DIRECTED BY THE ENGINEER.
14. THE CONCRETE PAVING BLOCK SURFACING ON THE AREA UNDER ELEVATED U-TURN AS SHOWN ON THIS DRAWING IS GUIDANCE ONLY.THE OTHER SURFACINGS MAY BE SUBSTITUTED AS DIRECTED BY THE ENGINEER.
15. THE PAVEMENT STRUCTURES OF THE ROADWAY SHALL BE SPECIFIED AS DESIGNED FOR EACH PROJECT.

REF.	REVISION	SIGNATURE	DATE

KINGDOM OF THAILAND

MINISTRY OF TRANSPORT
DEPARTMENT OF HIGHWAYS

STANDARD DRAWING

TYPICAL CROSS-SECTION FOR DIVIDED HIGHWAY
R.O.W. WIDTH 80.00 M.-II

DESIGNED : D.O.H. & CONSULTANTS	CHECKED : BUREAU OF LOCATION & DESIGN	DATE : OCT 2015
SUBMITTED : (DIRECTOR OF LOCATION & DESIGN BUREAU)		SCALE : AS SHOWN
APPROVED : (FOR DIRECTOR GENERAL)		DWG NO. TS-312
		SHEET NO. 17

BUK0&WK\dwg\02\ts\A_3dwg\02(REVISED) 31/2(REVISED).dwg

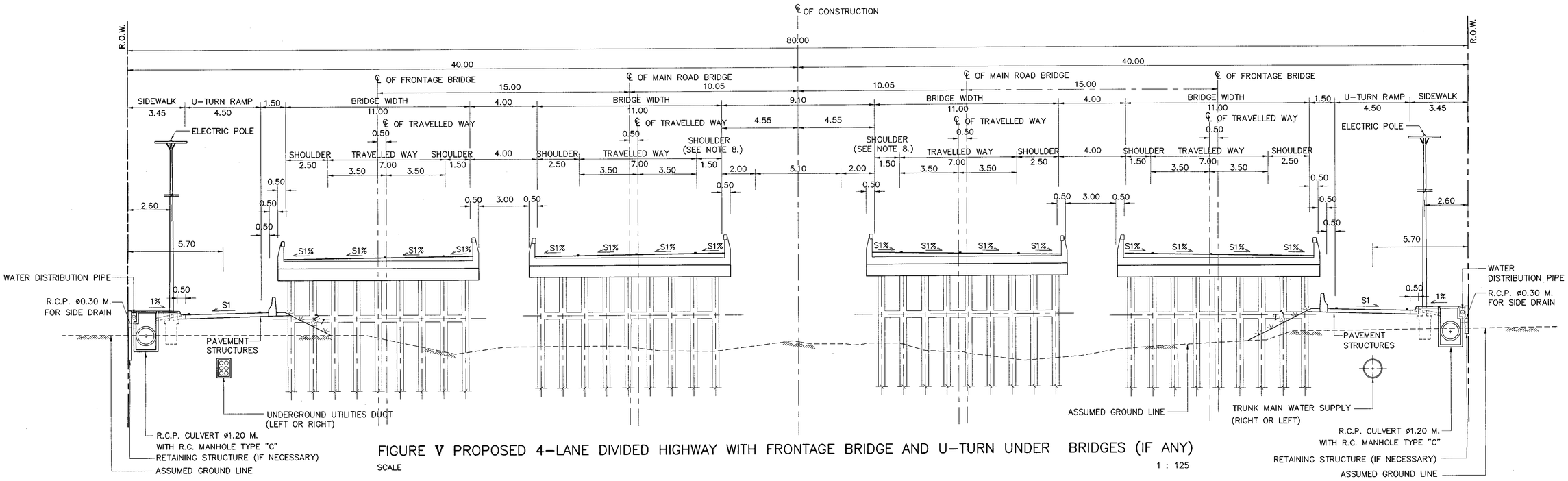

FIGURE V PROPOSED 4-LANE DIVIDED HIGHWAY WITH FRONTAGE BRIDGE AND U-TURN UNDER BRIDGES (IF ANY)

SCALE 1 : 125

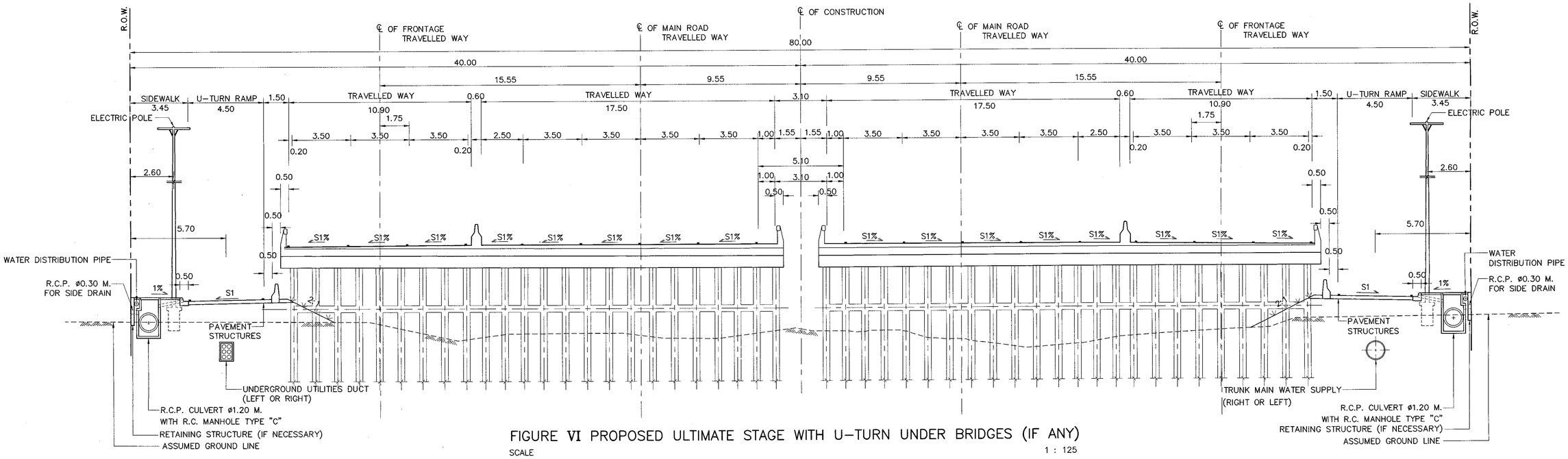

FIGURE VI PROPOSED ULTIMATE STAGE WITH U-TURN UNDER BRIDGES (IF ANY)

SCALE 1 : 125

NOTES:

1. ALL DIMENSIONS ARE IN METERS UNLESS OTHERWISE INDICATED.
2. S1 = NORMAL CROSS SLOPE AS SHOWN ON THE TYPICAL CROSS-SECTION.
3. CRITERIA FOR UTILITIES LOCATION CONSIDERATION
   - 3.1 AS SHOWN ON THIS DRAWING UTILITIES SHALL BE LOCATED FOR NEW CONSTRUCTION HIGHWAYS OR NO EXISTING UTILITIES.
   - 3.2 WHEN THERE ARE EXISTING UTILITIES OR EXISTING ROADWAY,THE LOCATION OF THE PROPOSED UTILITIES SHALL BE ADJUSTED IF NECESSAY.
4. THIS DRAWING IS GUIDANCE ONLY. THE DIMENSION AND LOCATION OF UTILITIES MAY BE ADJUSTED TO SUIT FOR THE FIELD CONDITION.
5. UNDERGROUND UTILITIES DUCT AND TRUNK MAIN WATER SUPPLY SHALL BE LOCATED ALTERNATIVELY.
6. HEIGHT OF ELECTRIC POLE SHALL BE NOT MORE THAN 22.00 M. OR WIDTH OF FOOTING SHALL BE NOT MORE THAN 1.10 M. FOR TYPICAL AS SHOWN ON THIS DRAWING.
7. THE ELEMENT OF THE CROSS SECTION SHOWN COULD BE ADJUSTED ACCORDING TO DIFFERENT DESIGN FUNCTIONS.
8. THE INNER SHOULDER OF MAIN ROAD BRIDGE (1.50 M.WIDTH) AS SHOWN ON FIGURE V IS FOR THE STANDARD HIGHWAY CLASS.THESE MAY BE ENLARGED TO 2.50 M. WIDTH IN CASE OF CONSIDERING THE MAIN ROAD BRIDGE TO BE 6-LANE ROADWAY IN THE FUTURE (EACH BRIDGE CARRY 3 LANES) WITHOUT ANY FURTHER WIDENING OF THE BRIDGE STRUCTURE.
9. THE PAVEMENT STRUCTURES OF THE ROADWAY SHALL BE SPECIFIED AS DESIGNED FOR EACH PROJECT.

REF.	REVISION	SIGNATURE	DATE

KINGDOM OF THAILAND

MINISTRY OF TRANSPORT

DEPARTMENT OF HIGHWAYS

STANDARD DRAWING

TYPICAL CROSS-SECTION FOR DIVIDED HIGHWAY
R.O.W. WIDTH 80.00 M.-III

DESIGNED : D.O.H. & CONSULTANTS	CHECKED : BUREAU OF LOCATION & DESIGN	DATE : OCT 2015
SUBMITTED : (DIRECTOR OF LOCATION & DESIGN BUREAU)		SCALE : AS SHOWN
APPROVED : (FOR DIRECTOR GENERAL)		DWG NO. TS-313
		SHEET NO. 18

D:\std dwg 2015\TS-313(REV00)

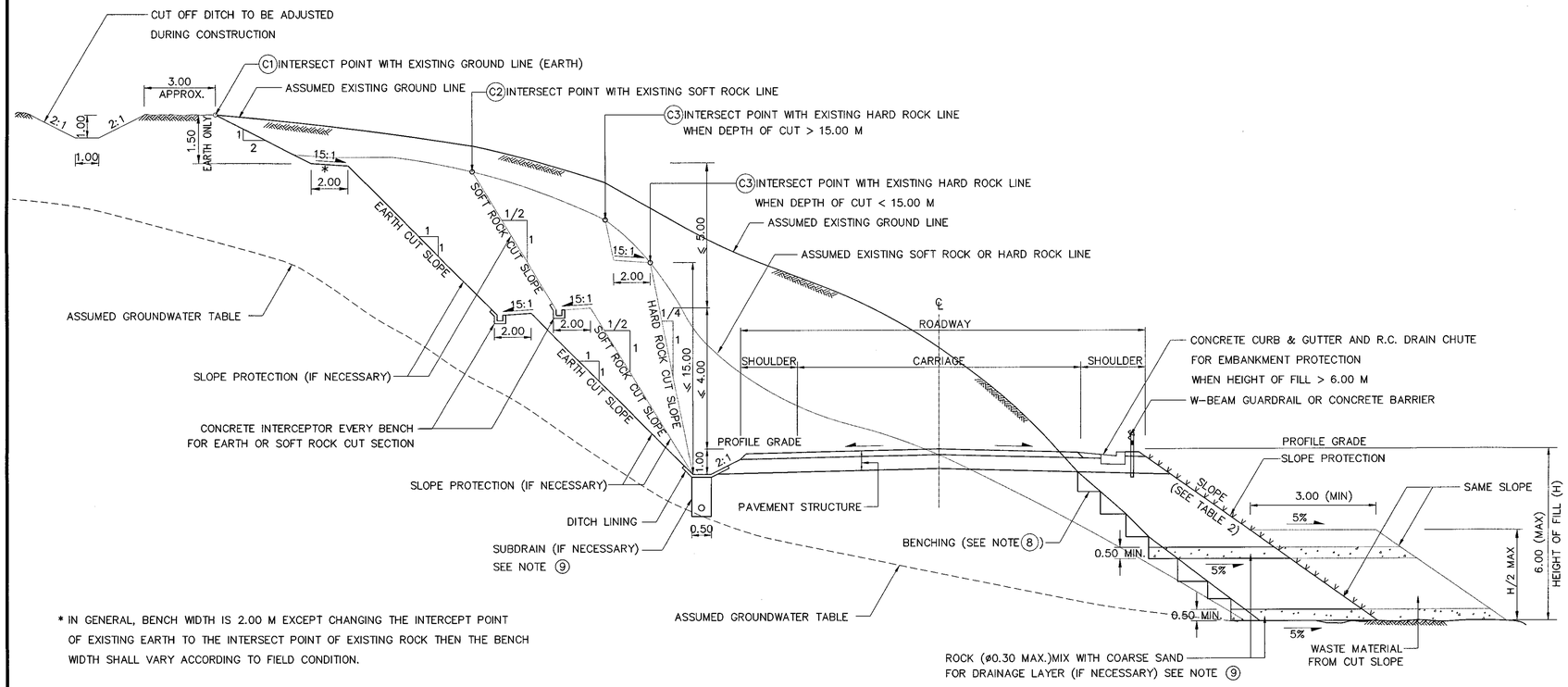

* IN GENERAL, BENCH WIDTH IS 2.00 M EXCEPT CHANGING THE INTERCEPT POINT OF EXISTING EARTH TO THE INTERSECT POINT OF EXISTING ROCK THEN THE BENCH WIDTH SHALL VARY ACCORDING TO FIELD CONDITION.

TYPICAL CROSS – SECTION
NOT TO SCALE

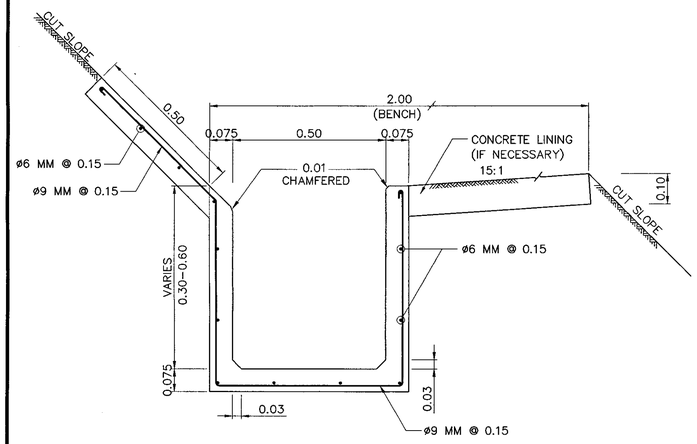

DETAIL OF CONCRETE INTERCEPTOR
SCALE 1 : 10

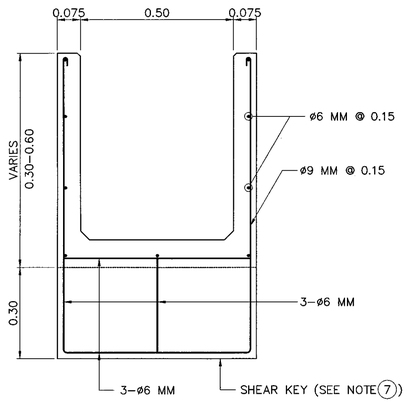

CROSS – SECTION OF CONCRETE INTERCEPTOR AT SHEAR KEY
SCALE 1 : 10

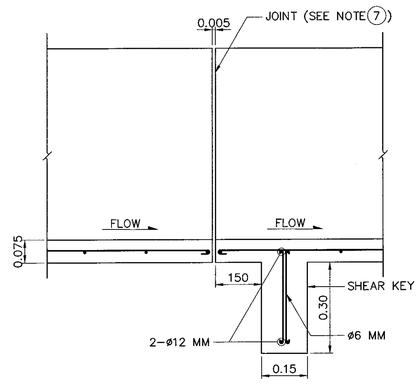

PROFILE SECTION OF CONCRETE INTERCEPTOR
SCALE 1 : 10

NOTE :

1. ALL DIMENSIONS ARE IN METERS UNLESS OTHERWISE INDICATED.
2. THE CROSS SECTION OF CUT AND FILL HEREIN SHALL BE APPLIED ONLY WITH THE DEPTH OF CUT IS OVER 5.00 METRES FROM THE BOTTOM OF THE SIDE DITCH, AND SIDE HILL FILL ALSO.
3. PAVEMENT STRUCTURES AND OTHER DETAILS WHICH ARE NOT SPECIFIED IN THIS DRAWING SHALL BE REFERED TO THAT IN THE TYPICAL CROSS–SECTION DRAWING.
4. THE PROCESS OF RIPPING AND EXPOSING THE CUT MATERIALS SHALL BE MEASURED AS FOLLOWS:
   - 4.1 IN CASE OF SOIL WITHOUT ANY ROCKS APPEAR ABOVE THE GROND SURFACE, THE POINT (C1) IN THE DRAWING WILL BE THE INTERSECTION POINT BETWEEN THE SLOPE OF CUT AND THE EXISTING GROUND LINE SO THE EXCAVATION SHALL START FROM THIS POINT.
   - 4.2 AFTER THE EXCAVATION AS INDICATED IN SECTION 4.1 FOR A DISTANCE AND THE SOFT ROCK OR HARD ROCK WAS FOUND, THEN THE TOE SLOPE SHALL BE CHANGED FROM POINT (C1) TO POINT (C2) OR (C3) AS INDICATED ON THE DRAWING, THE STEP WIDTH OF BENCHING SHALL BE DIRECTED BY THE ENINEER, THE STABILITY OF THE CUT SLOPE SHOULD BE CAREFULLY CONSIDERED AND THE UNSUITABLE TOP SOIL MATERIALS SHALL BE REMOVED.
   - 4.3 THE CLASSIFICATION OF SOIL, SOFT ROCK OR HARD ROCK SHALL BE CONSIDERED IN ACCORDANCE WITH THE SPECIFICATION FOR HIGHWAY CONSTRUCTION BY THE DEPARTMENT OF HIGHWAYS, AND ALSO SHALL BE DIRECTED BY THE ENGINEER.
   - 4.4 THE QUANTITIES SHALL BE CULCULATED FROM THE CROSS–SECTION, SEPARATED FOR SOIL, SOFT ROCK OR HARD ROCK AT 6.25 M INTERVAL. IN CASE OF MIXED MATERIALS FOR EACH CROSS–SECTION, THEN THE NEGOTIATION BETWEEN THE OWNER AND THE CONTRACTOR SHOULD BE ARRANGED.
5. CONCRETE INTERCEPTION ON CUT SLOPE SHALL BE CONSTRUCTURED ON SILTY SAND, GRAVEL LATERITE, SOFT ROCK OR SHALE, BUT BE NOT NECESSARY ON SHALE SOLID ROCK AREA.
6. THE LONGITUDINAL SLOPE OF CONCRETE INTERCEPTOR IN NOTE 5 SHALL NOT BE LESS THAN 0.3 PERCENT.
7. EACH SECTION OF CONCRETE INTERCEPTOR SHALL BE 0.50 M LONG PRECAST CONCRETE AND SHALL NOT BE GREATER THAN 15.00 M FOR CAST–IN–PLACE CONCRETE. ALL JOINT SPACES SHALL BE 0.005 M. WIDE WITH MORTARED FLUSH ON (THE RATIO OF PORTLAND CEMENT : SAND IS 1 : 2 BY VOLUME)
8. BENCHING SHALL BE REQUIRED ON EXISTING GROUND SLOPE OR EXISTING ROADBED IN THE PORTION OF EMBANKMENT. THE NUMBER OF STEPS FOR BENCHING DEPENDS UPON THE HEIGHT OF SLOPE. THE HEIGHT OF EACH STEP SHALL BE DIRECTED BY THE ENGINEER, AND THE WIDTH SHALL BE PERMITED FOR COMPACTED EQUIPMENT, AND THE DENSITY OF THE COMPACTED MATERIAL SHALL NOT BE LESS THAN 95 PERCENT OF STANDARD PROCTOR.
9. BEFORE CONSTRUCTING PAVEMENT STRUCTURES, IF GROUNDWATER SEEPAGE APPEARS ON CUT SLOPE OR SIDE HILL FILL AND SEEMS TO DAMAGE THE ROADWAY, THE DRAINAGE LAYER OR SUBDRAINAGE AS SHOWN ON THE DRAWING SHALL BE APPLIED.
10. CONCRETE INTERCEPTOR SHALL HAVE A MINIMUM ULTIMATE COMPRESSIVE STRENGTH OF 20 MPa (204 KG/CM^2) FOR 0.15x0.15x0.15 M CUBE AT 28 DAYS.
11. THE REINFORCING STEEL SHALL CONFORM TO TIS. 20 GRADE SR 24 WITH THE MINIMUM CLEAR CONCRETE COVER OF 0.025 M.
12. P.V.C. PIPE SHALL BE D–PLAST RIGID TYPE CLASS 13.5 (PLAIN ENDS) CONFORMING TO TIS. 17.
13. DITCH LINING SHALL BE CONSTRUCTED BY CONSIDERATION OF SOIL CONDITION, DEGREE OF EROSION , WATER VELOCITY, RAINFALL INTENSITY, SLOPE, AND AMOUNT OF DISCHARGE IN THE DITCH.
14. IN CASE HEIGHT OF FILL > 6.00 M. AND IN CASE OF RESTRICTED CONSTRUCTION BOUNDARY, THE SLOPE SHALL BE DESIGNED BY THE ENGINEER.

TABLE 1 DETAIL OF CUT SLOPE (IN GENERAL)

SLOPE (H:V)	TYPE OF MATERIAL
1:1	EARTH
1/2:1	SOFT ROCK
1/4:1	HARD ROCK

TABLE 2 DETAIL OF FILL SLOPE (IN GENERAL)

SLOPE (H:V)	TYPE OF MATERIAL
1.5:1	EARTH
1:1	ROCK

REMARK :

THE SLOPES SUGGESTED IN TABLE 1AND TABLE 2 SHALL BE CONSIDERED AS A GENERAL GUIDELINE ONLY. APPROPRIATE CUT AND FILL SLOPES SHALL BE CONFIRMED BASED ON GEOTECHNICAL/GEOLOGICAL CONDITIONS OF THE PROJECT SITE. PRIOR TO CONSTRUCTION, THE CONTRACTOR SHALL CARRY OUT SLOPE STABILITY ANALYSIS OF DEEP CUT/ HIGH FILL BASED ON ACTUAL GEOLOGICAL CONDITIONS AND SHALL BE APPROVED BY THE GEOLOGIST OR ENGINEER.

REF.	REVISION	SIGNATURE	DATE

KINGDOM OF THAILAND
MINISTRY OF TRANSPORT
DEPARTMENT OF HIGHWAYS
STANDARD DRAWING

CROSS – SECTION FOR DEEP CUT AND HIGH FILL

DESIGNED : D.O.H. & CONSULTANTS	**CHECKED :** BUREAU OF LOCATION & DESIGN	**DATE :** OCT 2015
SUBMITTED : (DIRECTOR OF LOCATION & DESIGN BUREAU)		**SCALE :** AS SHOWN
APPROVED : (FOR DIRECTOR GENERAL)		**DWG NO.** TS–401
		SHEET NO. 19

D:\std dwg 2015\TS-401(REV00)

SECTION 2) GEOMETRIC & GENERAL DESIGN

DIAGRAMMATIC PROFILES SHOWING METHODS OF ATTAINING SUPERELEVATION FOR A CURVE TO THE RIGHT

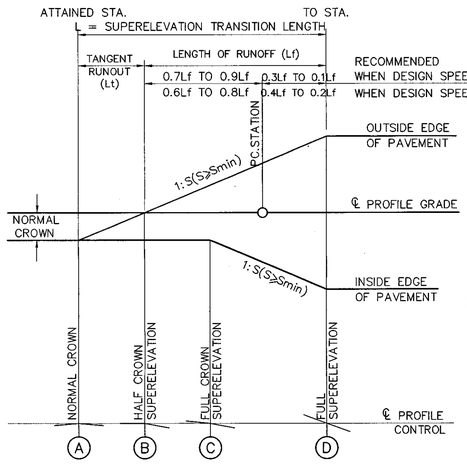

FIG. 5 CROWNED PAVEMENT
REVOLVED ABOUT CENTERLINE

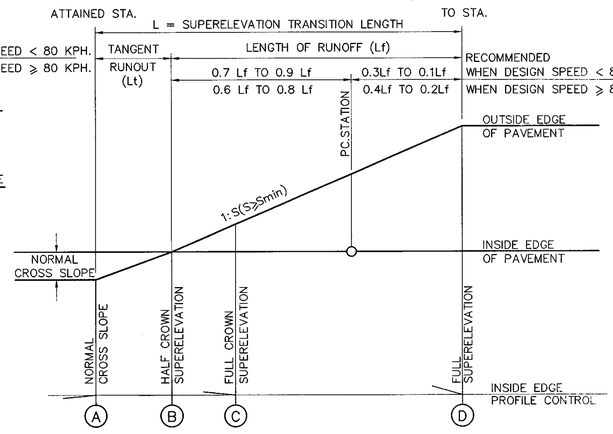

FIG. 8 STRAIGHT CROSS SLOPE PAVEMENT
REVOLVED ABOUT INSIDE EDGE (SINGLE LANE)

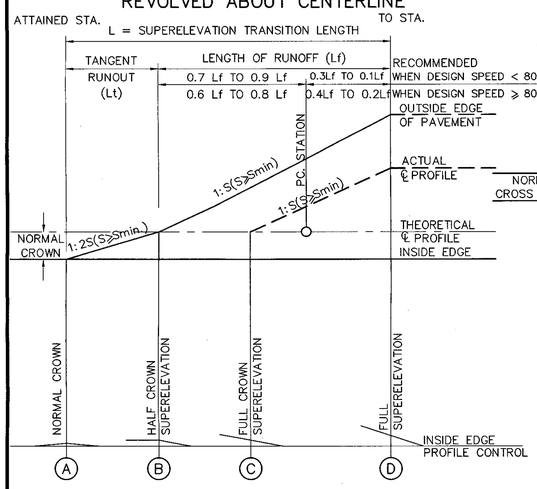

FIG. 6 CROWNED PAVEMENT
REVOLVED ABOUT INSIDE EDGE

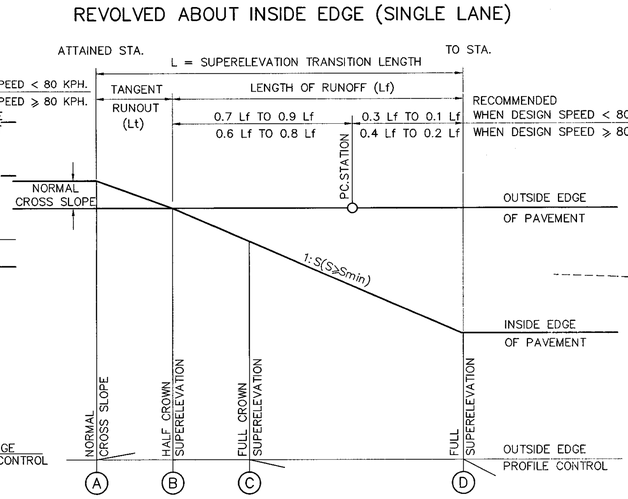

FIG. 9 STRAIGHT CROSS SLOPE PAVEMENT
REVOLVED ABOUT OUTSIDE EDGE (SINGLE LANE)

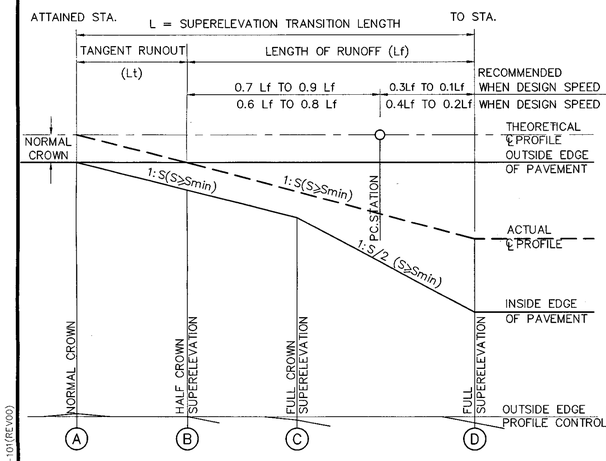

FIG. 7 CROWNED PAVEMENT
REVOLVED ABOUT OUTSIDE EDGE

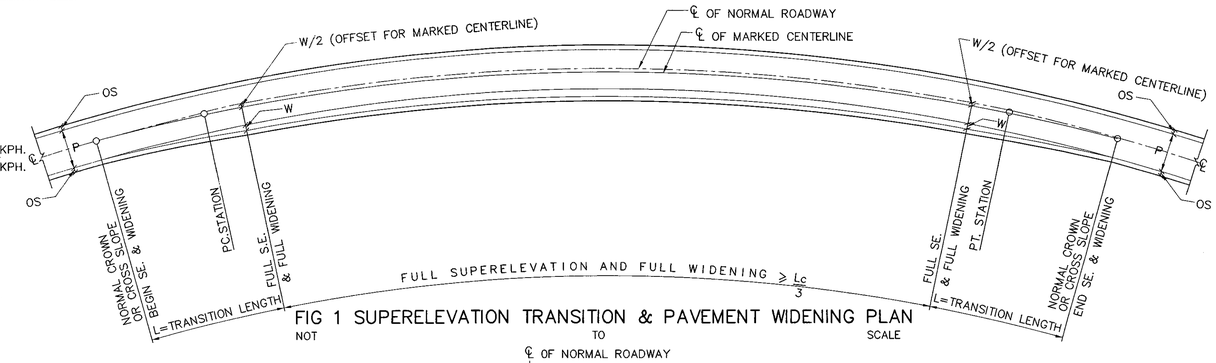

FIG 1 SUPERELEVATION TRANSITION & PAVEMENT WIDENING PLAN
NOT TO SCALE

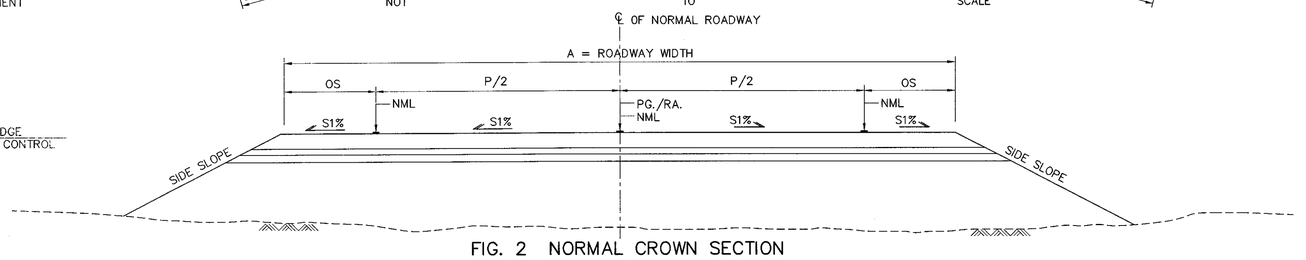

FIG. 2 NORMAL CROWN SECTION
NOT TO SCALE

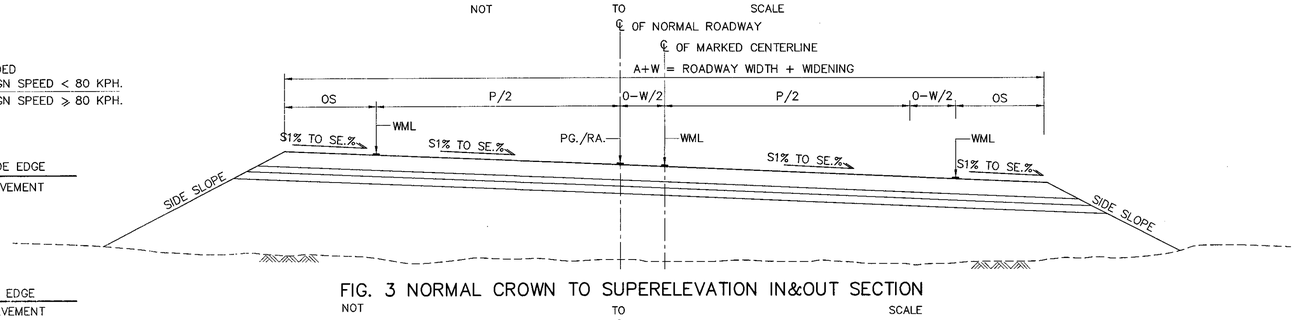

FIG. 3 NORMAL CROWN TO SUPERELEVATION IN&OUT SECTION
NOT TO SCALE

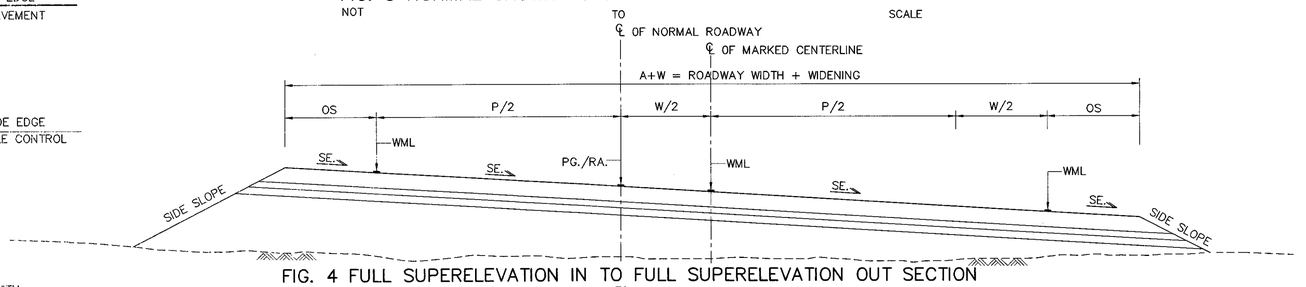

FIG. 4 FULL SUPERELEVATION IN TO FULL SUPERELEVATION OUT SECTION
NOT TO SCALE

NOTES :

1. THE ROADWAY SHALL BE CONSTRUCTED IN ACCORDANCE WITH DETAILS SHOWN ON THE TYPICAL CROSS-SECTION , PLAN&PROFILE AND THIS DRAWING.
2. THE MINIMUM OF LENGTH OF RUNOFF (Lf_{min}) SHALL BE DETERMINED AS;

$$Lf_{min} = \frac{C_w \cdot W_L \times SE.}{\triangle_g}$$

WHERE : $\triangle_g$ VALUES ARE LISTED AS SHOWN ON TABLE 1.

3. THE MINIMUM OF TANGENT RUNOUT ($L_{t\ min}$) SHALL BE DETERMINED AS;

$$L_{t\ min} = K \times Lf_{min}$$

WHERE : K VALUES ARE LISTED AS SHOWN ON TABLE 2.

4. THE REQUIRED WIDENING (W) AND SUPERELEVATION RATE ARE GIVEN ON THE ALIGNMENT DRAWINGS.
5. THE METHOD OF SUPERELEVATION ATTAININGS AS SHOWN ON THIS DRAWING ACCORD WITH AASHTO 2011.
6. THE ABBREVIATIONS USED :

NC	=	NORMAL CROWN OR CROSS SLOPE	L	=	SUPERELEVATION TRANSITION LENGTH
SE.	=	DESIGN SUPERELEVATION RATE,%	Lc	=	LENGTH OF CIRCULAR CURVE
P	=	TRAVELLED WAY WIDTH	Lf	=	LENGTH OF RUNOFF
W_L	=	WIDTH OF ONE TRAFFIC LANE	Lt	=	TANGENT RUNOUT LENGTH
OS	=	OUTER SHOULDER WIDTH	C_w	=	ADJUSTMENT FACTOR ,WHICH INCREASE RELATIVE TO ONE LANE ROTATED.
W	=	WIDENING OF TRAVELLED WAY WIDTH		=	1.00 FOR ONE LANE ROTATED (REVOLVED ABOUT CENTERLINE)
NML	=	NORMAL MARKED LINE		=	1.50 FOR TWO LANES ROTATED (REVOLVED ABOUT INSIDE OR OUTSIDE EDGE)
WML	=	WIDEN MARKED LINE	K	=	PROPORTION OF NORMAL CROWN OR OR CROSS SLOPE TO DESIGN SE. RATE.
RA.	=	ROTATION AXIS			
PG.	=	PROFILE GRADE			
S1 %	=	NORMAL CROSS SLOPE			
$\triangle_g$	=	MAXIMUM RELATIVE GRADIENT,%			

TABLE 1 : RELATIONSHIP OF DESIGN SPEED TO MAXIMUM RELATIVE PROFILE SLOPES OR MAXIMUM RELATIVE GRADIENTS BETWEEN THE EDGE OF TWO-LANE PAVEMENT AND THE AXIS OF ROTATION.

DESIGN SPEED KPH.	MAXIMUM RELATIVE SLOPES (1 : Smin)	EQUIVALENT MAXIMUM RELATIVE GRADIENTS ($\triangle_g$,%)	DESIGN SPEED KPH.	MAXIMUM RELATIVE SLOPES (1 : Smin)	EQUIVALENT MAXIMUM RELATIVE GRADIENTS ($\triangle_g$,%)
20	1 : 125	0.80	80	1 : 200	0.50
30	1 : 133	0.75	90	1 : 213	0.47
40	1 : 143	0.70	100	1 : 227	0.44
50	1 : 154	0.65	110	1 : 244	0.41
60	1 : 167	0.60	120	1 : 263	0.38
70	1 : 182	0.55	130	1 : 286	0.35

TABLE 2 : PROPORTION OF NORMAL CROWNS OR CROSS SLOPES TO VARIOUS DESIGN SUPERELEVATION RATES, K.

S1 (%)	DESIGN SUPERELEVATION RATES, SE. (%)																
	1.5	2.0	2.5	3.0	3.5	4.0	4.5	5.0	5.5	6.0	6.5	7.0	7.5	8.0	8.5	9.0	9.5	10.0
1.5	1.000	0.750	0.600	0.500	0.429	0.375	0.333	0.300	0.273	0.250	0.231	0.214	0.200	0.188	0.176	0.167	0.158	0.150
2.0		1.000	0.800	0.667	0.571	0.500	0.444	0.400	0.364	0.333	0.308	0.286	0.267	0.250	0.235	0.222	0.211	0.200
2.5			1.000	0.833	0.714	0.625	0.556	0.500	0.455	0.417	0.385	0.357	0.333	0.313	0.294	0.278	0.263	0.250
3.0				1.000	0.857	0.750	0.667	0.600	0.545	0.500	0.462	0.429	0.400	0.375	0.353	0.333	0.316	0.300
3.5					1.000	0.875	0.778	0.700	0.636	0.583	0.538	0.500	0.467	0.438	0.412	0.389	0.368	0.350

REF.	REVISION	SIGNATURE	DATE

KINGDOM OF THAILAND

MINISTRY OF TRANSPORT
DEPARTMENT OF HIGHWAYS

STANDARD DRAWING

SUPERELEVATION ATTAINING AND WIDENING
2-LANE HIGHWAY ON CIRCULAR CURVE

DESIGNED : D.O.H. & CONSULTANTS	CHECKED : BUREAU OF LOCATION & DESIGN	DATE : OCT 2015
SUBMITTED :	(DIRECTOR OF LOCATION & DESIGN BUREAU)	SCALE : AS SHOWN
APPROVED :	(FOR DIRECTOR GENERAL)	DWG NO. GD-101
		SHEET NO. 20

D:\std dwg 2015\GD-101(REV00)

DIAGRAMMATIC PROFILES SHOWING METHODS OF ATTAINING SUPERELEVATION FOR A CURVE TO THE RIGHT

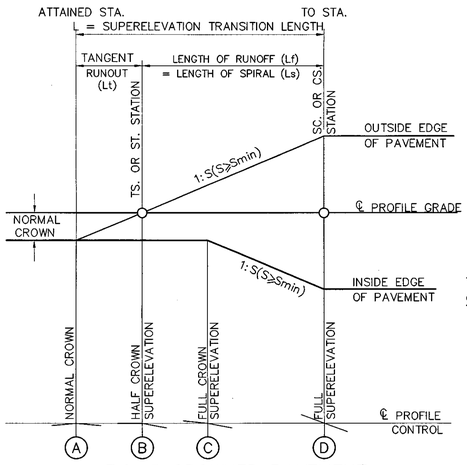

FIG. 5 CROWNED PAVEMENT REVOLVED ABOUT CENTERLINE

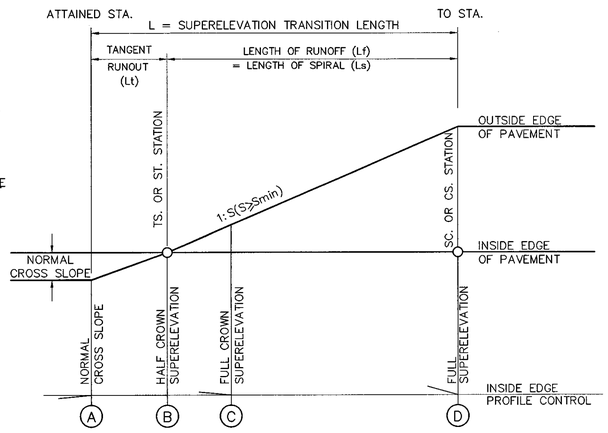

FIG. 8 STRAIGHT CROSS SLOPE PAVEMENT REVOLVED ABOUT INSIDE EDGE (SINGLE LANE)

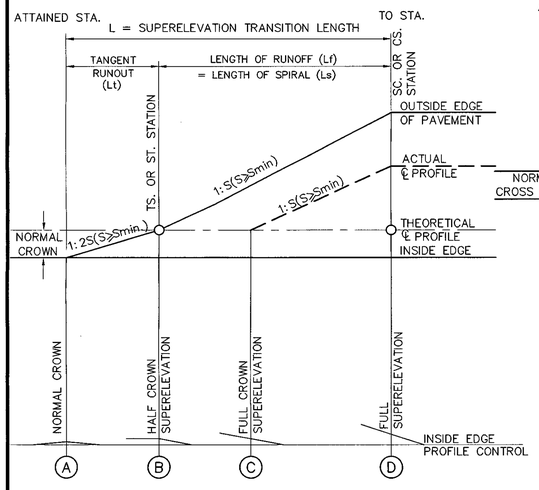

FIG. 6 CROWNED PAVEMENT REVOLVED ABOUT INSIDE EDGE

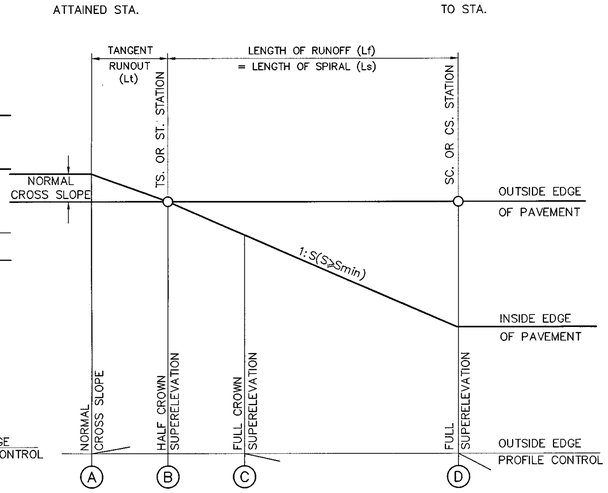

FIG. 9 STRAIGHT CROSS SLOPE PAVEMENT REVOLVED ABOUT OUTSIDE EDGE (SINGLE LANE)

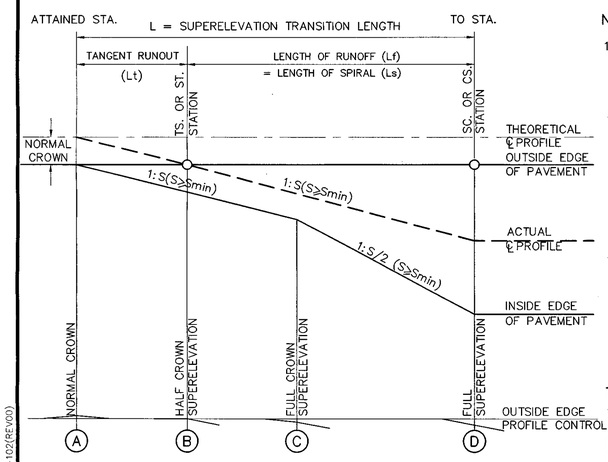

FIG. 7 CROWNED PAVEMENT REVOLVED ABOUT OUTSIDE EDGE

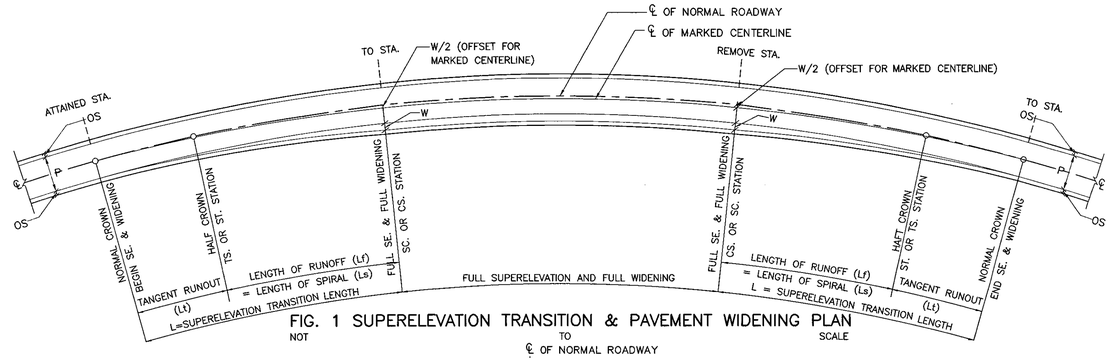

FIG. 1 SUPERELEVATION TRANSITION & PAVEMENT WIDENING PLAN
NOT TO SCALE

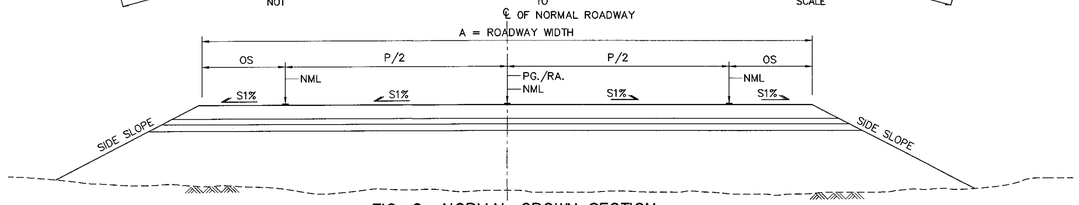

FIG. 2 NORMAL CROWN SECTION
NOT TO SCALE

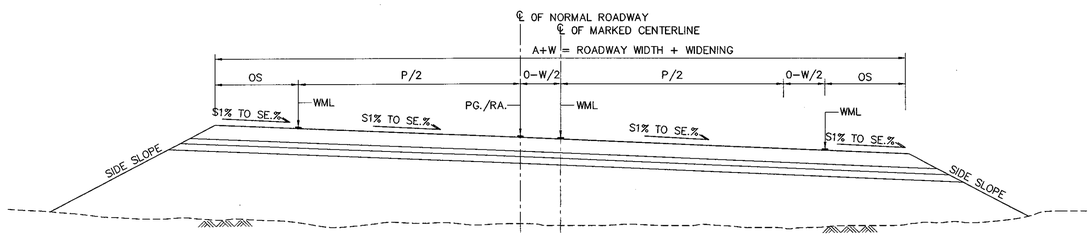

FIG. 3 NORMAL CROWN TO SUPERELEVATION IN&OUT SECTION
NOT TO SCALE

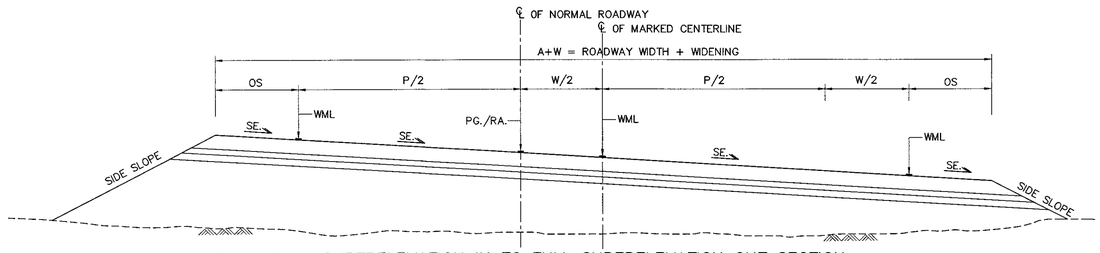

FIG. 4 FULL SUPERELEVATION IN TO FULL SUPERELEVATION OUT SECTION
NOT TO SCALE

NOTES :

1. THE ROADWAY SHALL BE CONSTRUCTED IN ACCORDANCE WITH DETAILS SHOWN ON THE TYPICAL CROSS-SECTION , PLAN&PROFILE AND THIS DRAWING.
2. THE MINIMUM OF LENGTH OF RUNOFF (Lf_{min}) SHALL BE DETERMINED AS;

$$Lf_{min} = \frac{C_w \times W_L \times SE.}{\triangle_g}$$

WHERE : $\triangle_g$ VALUES ARE LISTED AS SHOWN ON TABLE 1.

3. THE MINIMUM OF TANGENT RUNOUT ($L_{t\,min}$) SHALL BE DETERMINED AS;

$$L_{t\,min} = K \times Lf_{min}$$

WHERE : K VALUES ARE LISTED AS SHOWN ON TABLE 2.

4. THE REQUIRED WIDENING (W) AND SUPERELEVATION RATE ARE GIVEN ON THE ALIGNMENT DRAWINGS.
5. THE LENGTH OF SPIRAL (Ls) SHALL BE SET EQUAL TO THE LENGTH OF RUNOFF (Lf).
6. THE METHOD OF SUPERELEVATION ATTAININGS AS SHOWN ON THIS DRAWING ACCORD WITH AASHTO 2011.

TABLE 1 : RELATIONSHIP OF DESIGN SPEED TO MAXIMUM RELATIVE PROFILE SLOPES OR MAXIMUM RELATIVE GRADIENTS BETWEEN THE EDGE OF TWO-LANE PAVEMENT AND THE AXIS OF ROTATION.

DESIGN SPEED KPH.	MAXIMUM RELATIVE SLOPES (1 : Smin)	EQUIVALENT MAXIMUM RELATIVE GRADIENTS ($\triangle_g$,%)	DESIGN SPEED KPH.	MAXIMUM RELATIVE SLOPES (1 : Smin)	EQUIVALENT MAXIMUM RELATIVE GRADIENTS ($\triangle_g$,%)
20	1 : 125	0.80	80	1 : 200	0.50
30	1 : 133	0.75	90	1 : 213	0.47
40	1 : 143	0.70	100	1 : 227	0.44
50	1 : 154	0.65	110	1 : 244	0.41
60	1 : 167	0.60	120	1 : 263	0.38
70	1 : 182	0.55	130	1 : 286	0.35

TABLE 2 : PROPORTION OF NORMAL CROWNS OR CROSS SLOPES TO VARIOUS DESIGN SUPERELEVATION RATES, K.

S1 (%)	DESIGN SUPERELEVATION RATES, SE. (%)																	
	1.5	2.0	2.5	3.0	3.5	4.0	4.5	5.0	5.5	6.0	6.5	7.0	7.5	8.0	8.5	9.0	9.5	10.0
1.5	1.000	0.750	0.600	0.500	0.429	0.375	0.333	0.300	0.273	0.250	0.231	0.214	0.200	0.188	0.176	0.167	0.158	0.150
2.0		1.000	0.800	0.667	0.571	0.500	0.444	0.400	0.364	0.333	0.308	0.286	0.267	0.250	0.235	0.222	0.211	0.200
2.5			1.000	0.833	0.714	0.625	0.556	0.500	0.455	0.417	0.385	0.357	0.333	0.313	0.294	0.278	0.263	0.250
3.0				1.000	0.857	0.750	0.667	0.600	0.545	0.500	0.462	0.429	0.400	0.375	0.353	0.333	0.316	0.300
3.5					1.000	0.875	0.778	0.700	0.636	0.583	0.538	0.500	0.467	0.438	0.412	0.389	0.368	0.350

7. THE ABBREVIATIONS USED :

NC	=	NORMAL CROWN OR CROSS SLOPE	L	=	SUPERELEVATION TRANSITION LENGTH
SE.	=	DESIGN SUPERELEVATION RATE,%	Ls	=	LENGTH OF SPIRAL
P	=	TRAVELLED WAY WIDTH	Lf	=	LENGTH OF RUNOFF
W_L	=	WIDTH OF ONE TRAFFIC LANE	Lt	=	TANGENT RUNOUT LENGTH
OS	=	OUTER SHOULDER WIDTH	C_w	=	ADJUSTMENT FACTOR ,WHICH INCREASE RELATIVE TO ONE LANE ROTATED.
W	=	WIDENING OF TRAVELLED WAY WIDTH		=	1.00 FOR ONE LANE ROTATED (REVOLVED ABOUT CENTERLINE)
NML	=	NORMAL MARKED LINE		=	1.50 FOR TWO LANES ROTATED (REVOLVED ABOUT INSIDE OR OUTSIDE EDGE)
WML	=	WIDEN MARKED LINE	TS.	=	TANGENT TO SPIRAL
RA.	=	ROTATION AXIS	ST.	=	SPIRAL TO TANGENT
PG.	=	PROFILE GRADE	SC.	=	SPIRAL TO CURVE
S1 %	=	NORMAL CROSS SLOPE	CS.	=	CURVE TO SPIRAL
$\triangle_g$	=	MAXIMUM RELATIVE GRADIENT,%			
K	=	PROPORTION OF NORMAL CROWN OR OR CROSS SLOPE TO DESIGN SE. RATE.			

REF.	REVISION	SIGNATURE	DATE

KINGDOM OF THAILAND

MINISTRY OF TRANSPORT
DEPARTMENT OF HIGHWAYS

STANDARD DRAWING

SUPERELEVATION ATTAINING AND WIDENING 2-LANE HIGHWAY ON SPIRAL CURVE

DESIGNED : D.O.H. & CONSULTANTS	CHECKED : BUREAU OF LOCATION & DESIGN	DATE : OCT 2015
SUBMITTED : (DIRECTOR OF LOCATION & DESIGN BUREAU)		SCALE : AS SHOWN
APPROVED : (FOR DIRECTOR GENERAL)		DWG NO. GD-102
		SHEET NO. 21

D:\std dwg 2015\GD-102(REV00)

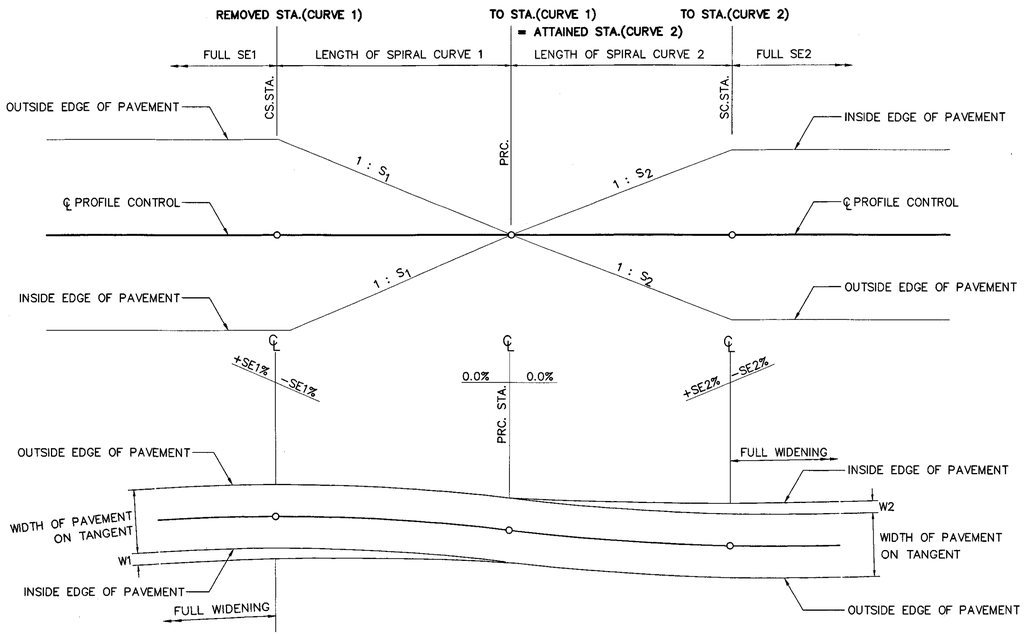

SUPERELEVATION DIAGRAM FOR REVERSE SPIRAL CURVES

NOT TO SCALE

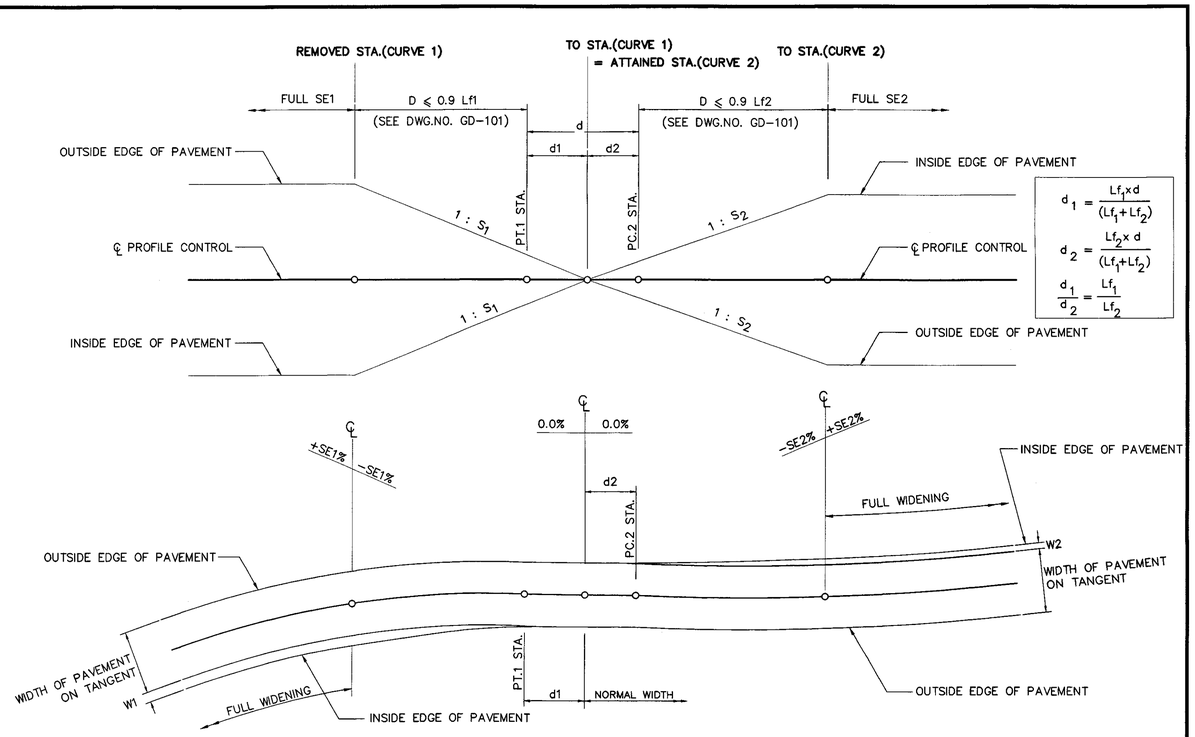

SUPERELEVATION TRANSITION DIAGRAM FOR REVERSE CIRCULAR CURVES WITH SHORT TANGENT

NOT TO SCALE

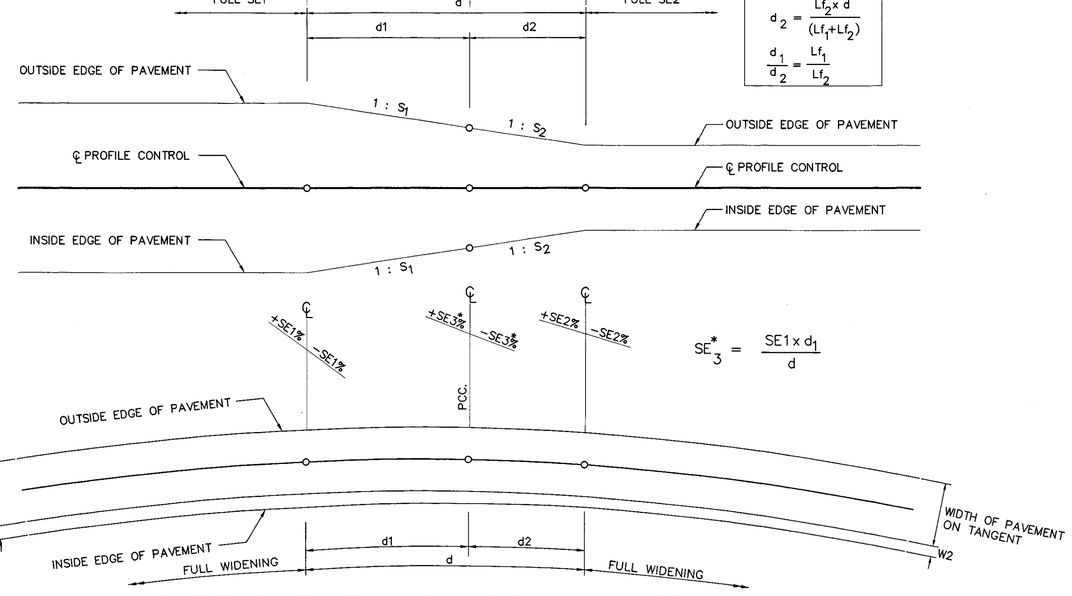

SUPERELEVATION TRANSITION DIAGRAM FOR COMPOUND CIRCULAR CURVES

NOT TO SCALE

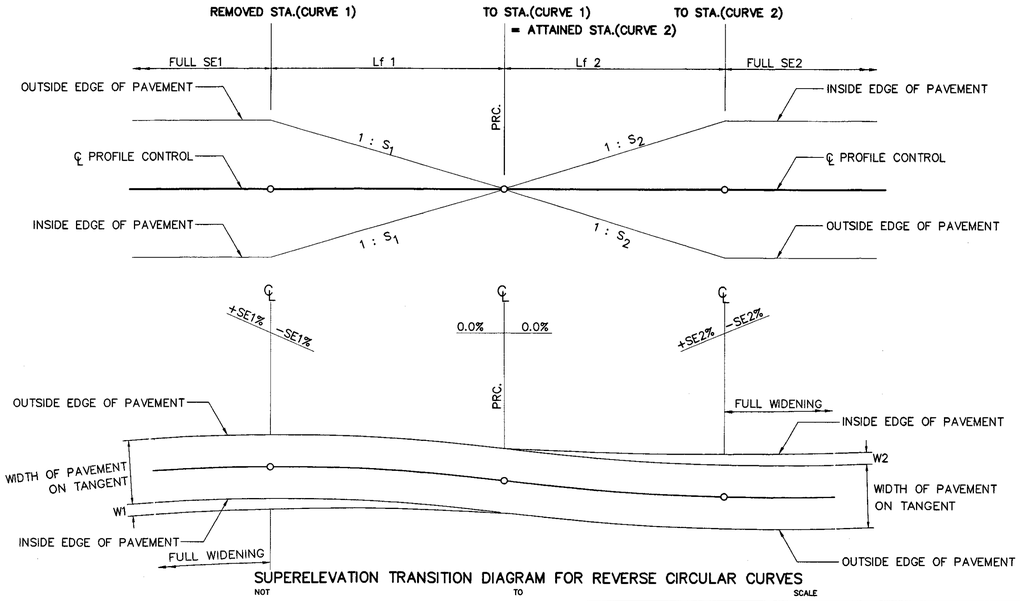

SUPERELEVATION TRANSITION DIAGRAM FOR REVERSE CIRCULAR CURVES

NOT TO SCALE

NOTES :

1. THIS DRAWING SHALL BE USED IN COMBINATION WITH DWG.NO. GD-101 AND DWG.NO. GD-102.
2. IN CASE OF THE TRANSITION LENGTH OF ADJACENT CURVES WITH OPPOSIT DIRECTION ARE OVERLAPPED "SUPERELEVATION DIAGRAM FOR REVERSE CURVES WITH SHORT TANGENT" IS APPLIED.
3. THE FULL SUPERELEVATION TRANSITION AND FULL WIDENING LENGTH MUST EQUAL OR MORE THAN $\frac{Lc.}{3}$
4. THE DRAWING IS GUIDANCE ONLY FOR ADJUSTED OVERLAP SUPERELEVATION TRANSITION.
5. THE DESIGN SPEED OF EACH CURVE SHOULD BE THE SAME OR DIFFERRENT, NOT MORE THAN 15 KPH.
6. IN CASE THE SAME DESIGN SPEED IS USED ON DIFFERENT RADIUS OF TWO CURVES , THESE DESIABLE DESIGN SPEED SHOULD BE DESIGN SPEED ON SHARPER CUVRE.
7. THE MAXIMUM RELATIVE SLOPE OF EACH CURVE , S1. (MIN.) OR S2. (MIN.) ARE DETERMINED AS SHOWN IN TABLE 1.

TABLE 1 : RELATIONSHIP OF DESIGN SPEED TO MAXIMUM RELATIVE PROFILE SLOPES OR MAXIMUM RELATIVE GRADIENTS BETWEEN THE EDGE OF TWO-LANE PAVEMENT AND THE AXIS OF ROTATION.

DESIGN SPEED KPH.	MAXIMUM RELATIVE SLOPES (1 : Smin)	EQUIVALENT MAXIMUM RELATIVE GRADIENTS ($\triangle_g$.%)	DESIGN SPEED KPH.	MAXIMUM RELATIVE SLOPES (1 : Smin)	EQUIVALENT MAXIMUM RELATIVE GRADIENTS ($\triangle_g$.%)
20	1 : 125	0.80	80	1 : 200	0.50
30	1 : 133	0.75	90	1 : 213	0.47
40	1 : 143	0.70	100	1 : 227	0.44
50	1 : 154	0.65	110	1 : 244	0.41
60	1 : 167	0.60	120	1 : 263	0.38
70	1 : 182	0.55	130	1 : 286	0.35

REF.	REVISION	SIGNATURE	DATE

KINGDOM OF THAILAND

MINISTRY OF TRANSPORT

DEPARTMENT OF HIGHWAYS

STANDARD DRAWING

SUPERELEVATION ATTAINING AND WIDENING COMPOUND AND REVERSE CURVE

DESIGNED : D.O.H. & CONSULTANTS	CHECKED : BUREAU OF LOCATION & DESIGN	DATE : OCT 2015
SUBMITTED : (DIRECTOR OF LOCATION & DESIGN BUREAU)		SCALE : AS SHOWN
APPROVED : (FOR DIRECTOR GENERAL)		DWG NO. GD-103
		SHEET NO. 22

D:\std dwg 2015\GD-103(REV00)

NOTES :

1. THE ROADWAY SHALL BE CONSTRUCTED IN ACCORDANCE WITH DETAILS SHOWN ON THE TYPICAL CROSS-SECTION,PLAN & PROFILE AND THIS DRAWING.
2. THE ABBREVIATIONS USED :

S1	=	NORMAL CROSS SLOPE ,%
SE.	=	DESIGN SUPERELEVATION RATE ,%
P	=	TRAVELLED WAY WIDTH
W_L	=	WIDTH OF TRAFFIC LANE
OS	=	OUTER SHOULDER WIDTH
IS	=	INNER SHOULDER WIDTH
M	=	MEDIAN WIDTH
W	=	WIDENING OF TRAVELLED WAY WIDTH
NML	=	NORMAL MARKED LINE
WML	=	WIDEN MARKED LINE
RA.	=	ROTATION AXIS
PG.	=	PROFILE GRADE
L	=	SUPERELEVATION TRANSITION LENGTH
Lc	=	LENGTH OF CIRCULAR CURVE
Lf	=	LENGTH OF RUNOFF
Lt	=	TANGENT RUNOUT LENGTH
$\triangle_g$	=	MAXIMUM RELATIVE GRADIENT,%
N_L	=	NUMBER OF LANES ROTATED
C_w	=	ADJUSTMENT FACTOR ,WHICH INCREASE RELATIVE TO ONE LANE ROTATED.
	=	1.50 FOR TWO LANES ROTATED
	=	2.00 FOR THREE LANES ROTATED
K	=	PROPORTION OF NORMAL CROSS SLOPE TO DESIGN SUPERELEVATION RATE.

3. THE ILLUSTRATED DIAGRAMS IN FIG. 5 AND FIG. 6 ARE FOR THE COMPUTATION OF THE TANGENT RUNOUT LENGTH AND THE LENGTH OF RUNOFF FOR BASIC SINGLE LANE WIDTH (NORMAL TWO LANES HIGHWAY).
4. THIS DRAWING SHALL BE USED IN CONJUNCTION WITH DWG.NO GD-101 AND GD-103.
5. THE REQUIRED WIDENING(W) AND SUPERELEVATION RATE(SE.) ARE GIVEN ON THE ALIGNMENT DRAWINGS.
6. THE METHOD OF SUPERELEVATION ATTAININGS AS SHOWN ON THIS DRAWING ACCORD WITH AASHTO 2011.
7. THE DESIGNED IN THIS DRAWING ARE SHOWN FOR CURVE TURN TO THE RIGHT BUT CURVE TURN TO THE LEFT DESIGNS ARE MIRRORED AS DIRECTED BY THE ENGINEER.
8. THE MINIMUM OF LENGTH OF RUNOFF (Lf_{min}) SHALL BE DETERMINED AS;

$$Lf_{min} = \frac{C_w \times W_L \times SE.}{\triangle_g}$$

WHERE : $\triangle_g$ VALUES ARE LISTED AS SHOWN ON TABLE 1.

TABLE 1 :

RELATIONSHIP OF DESIGN SPEED TO MAXIMUM RELATIVE PROFILE SLOPES OR MAXIMUM RELATIVE GRADIENTS OF THE SINGLE LANE FROM THE INSIDE EDGE OF TRAVELLED WAY (ROTATION AXIS) OR NORMAL TWO-LANE HIGHWAYS.

DESIGN SPEED KPH.	MAXIMUM RELATIVE SLOPES (1 : S min)	EQUIVALENT MAXIMUM RELATIVE GRADIENTS ($\triangle_g$,%)
20	1 : 125	0.80
30	1 : 133	0.75
40	1 : 143	0.70
50	1 : 154	0.65
60	1 : 167	0.60
70	1 : 182	0.55
80	1 : 200	0.50
90	1 : 213	0.47
100	1 : 227	0.44
110	1 : 244	0.41
120	1 : 263	0.38
130	1 : 286	0.35

9. THE MINIMUM OF TANGENT RUNOUT ($L_{t\,min}$) SHALL BE DETERMINED AS;

$$L_{t\,min} = K \times Lf_{min}$$

WHERE : K VALUES ARE LISTED AS SHOWN ON TABLE 2.

TABLE 2 : PROPORTION OF NORMAL CROWNS OR CROSS SLOPES TO VARIOUS DESIGN SUPERELEVATION RATES, K.

S1 (%)	DESIGN SUPERELEVATION RATES, SE. (%)																	
	1.5	2.0	2.5	3.0	3.5	4.0	4.5	5.0	5.5	6.0	6.5	7.0	7.5	8.0	8.5	9.0	9.5	10.0
1.5	1.000	0.750	0.600	0.500	0.429	0.375	0.333	0.300	0.273	0.250	0.231	0.214	0.200	0.188	0.176	0.167	0.158	0.150
2.0		1.000	0.800	0.667	0.571	0.500	0.444	0.400	0.364	0.333	0.308	0.286	0.267	0.250	0.235	0.222	0.211	0.200
2.5			1.000	0.833	0.714	0.625	0.556	0.500	0.455	0.417	0.385	0.357	0.333	0.313	0.294	0.278	0.263	0.250
3.0				1.000	0.857	0.750	0.667	0.600	0.545	0.500	0.462	0.429	0.400	0.375	0.353	0.333	0.316	0.300
3.5					1.000	0.875	0.778	0.700	0.636	0.583	0.538	0.500	0.467	0.438	0.412	0.389	0.368	0.350

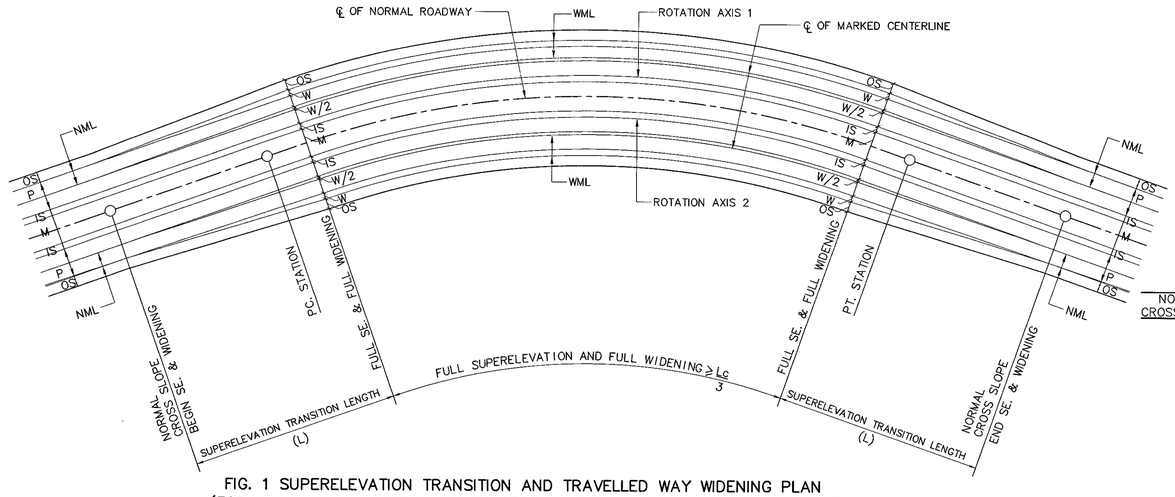

FIG. 1 SUPERELEVATION TRANSITION AND TRAVELLED WAY WIDENING PLAN
(FOR 4 LANES DEPRESSED MEDIAN SECTION FOR CURVE TURN TO THE RIGHT)
NOT TO SCALE

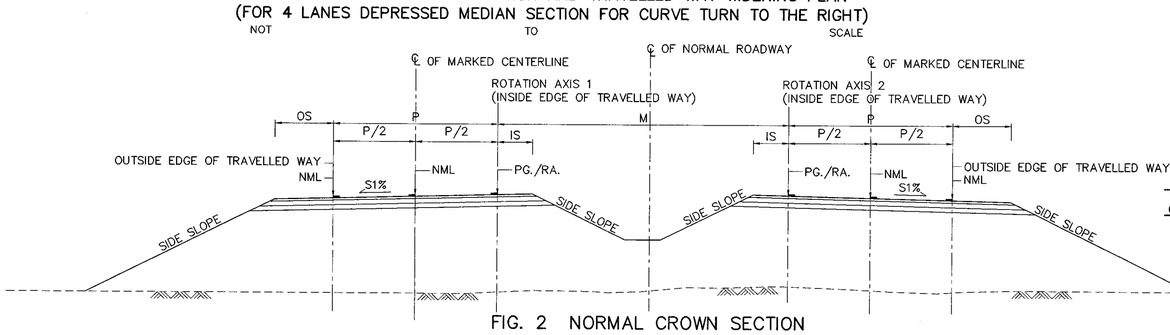

FIG. 2 NORMAL CROWN SECTION
NOT TO SCALE

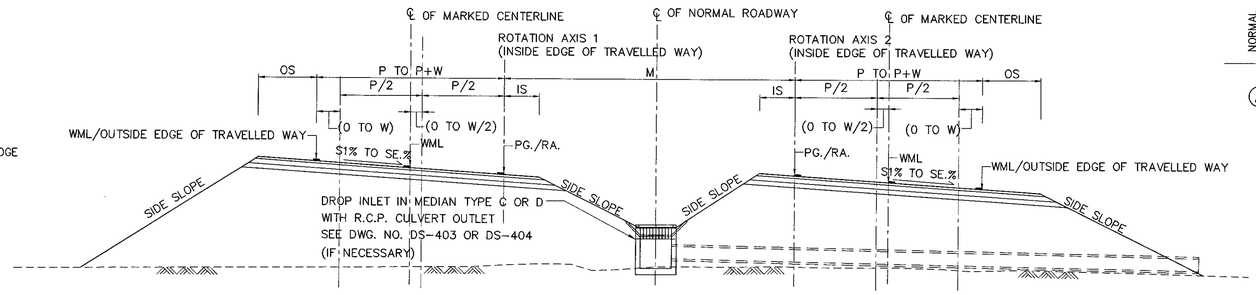

FIG. 3 NORMAL CROWN TO FULL SUPERELEVATION IN&OUT SECTION
NOT TO SCALE

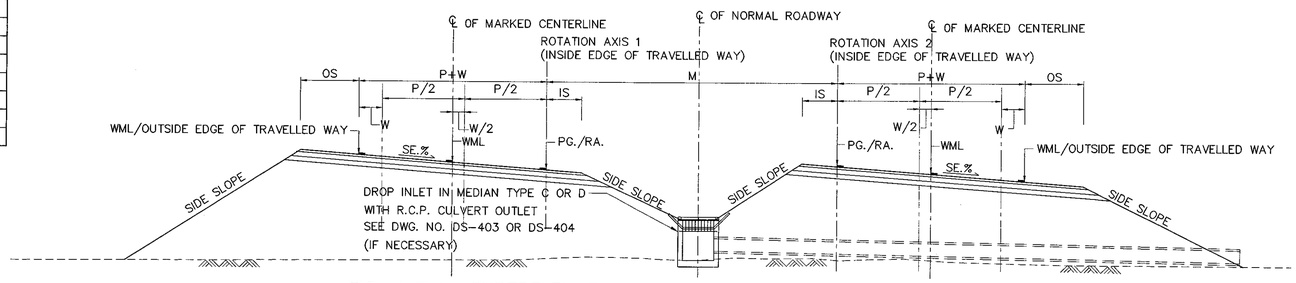

FIG. 4 FULL SUPERELEVATION IN TO FULL SUPERELEVATION OUT SECTION
NOT TO SCALE

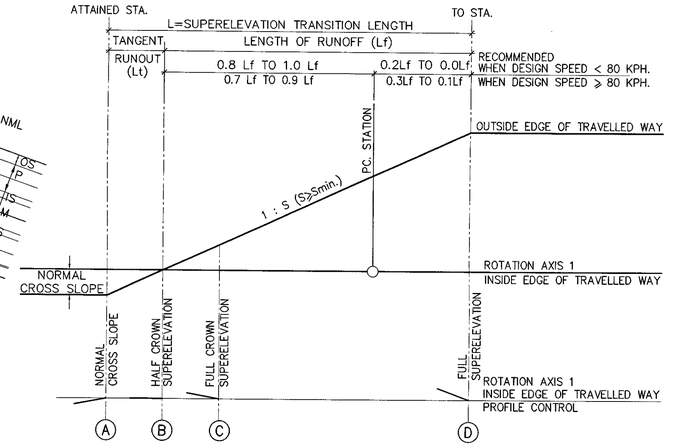

FIG. 5 STRAIGHT CROSS SLOPE
REVOLVED ABOUT ROTATION AXIS 1

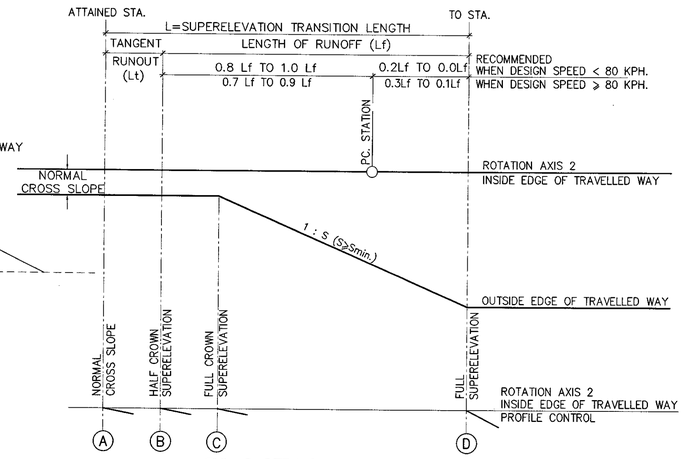

FIG. 6 STRAIGHT CROSS SLOPE
REVOLVED ABOUT ROTATION AXIS 2

REF.	REVISION	SIGNATURE	DATE

KINGDOM OF THAILAND

MINISTRY OF TRANSPORT

DEPARTMENT OF HIGHWAYS

STANDARD DRAWING

SUPERELEVATION ATTAINING AND WIDENING

MULTILANE HIGHWAY DEPERESSED MEDIAN ON CIRCULAR CURVE

DESIGNED : D.O.H. & CONSULTANTS	CHECKED : BUREAU OF LOCATION & DESIGN	DATE : OCT 2015
SUBMITTED : (DIRECTOR OF LOCATION & DESIGN BUREAU)		SCALE : AS SHOWN
APPROVED : (FOR DIRECTOR GENERAL)		DWG NO. GD-104
		SHEET NO. 23

D:\std dwg 2015\GD-104(REV00)

NOTES :

1. THE ROADWAY SHALL BE CONSTRUCTED IN ACCORDANCE WITH DETAILS SHOWN ON THE TYPICAL CROSS-SECTION,PLAN & PROFILE AND THIS DRAWING.
2. THE ABBREVIATIONS USED :

S1	=	NORMAL CROSS SLOPE ,%
SE.	=	DESIGN SUPERELEVATION RATE ,%
P	=	TRAVELLED WAY WIDTH
W_L	=	WIDTH OF TRAFFIC LANE
OS	=	OUTER SHOULDER WIDTH
IS	=	INNER SHOULDER WIDTH
M	=	MEDIAN WIDTH
W	=	WIDENING OF TRAVELLED WAY WIDTH
NML	=	NORMAL MARKED LINE
WML	=	WIDEN MARKED LINE
RA.	=	ROTATION AXIS
PG.	=	PROFILE GRADE
L	=	SUPERELEVATION TRANSITION LENGTH
Lc	=	LENGTH OF CIRCULAR CURVE
Lf	=	LENGTH OF RUNOFF
Lt	=	TANGENT RUNOUT LENGTH
$\triangle_g$	=	MAXIMUM RELATIVE GRADIENT,%
N_L	=	NUMBER OF LANES ROTATED
C_w	=	ADJUSTMENT FACTOR ,WHICH INCREASE RELATIVE TO ONE LANE ROTATED.
	=	1.50 FOR TWO LANES ROTATED
	=	2.00 FOR THREE LANES ROTATED
K	=	PROPORTION OF NORMAL CROSS SLOPE TO DESIGN SUPERELEVATION RATE.

3. THE ILLUSTRATED DIAGRAMS IN FIG. 5 AND FIG. 6 ARE FOR THE COMPUTATION OF THE TANGENT RUNOUT LENGTH AND THE LENGTH OF RUNOFF FOR BASIC SINGLE LANE WIDTH (NORMAL TWO LANES HIGHWAY).
4. THIS DRAWING SHALL BE USED IN CONJUNCTION WITH DWG.NO GD-101 AND GD-103.
5. THE REQUIRED WIDENING(W) AND SUPERELEVATION RATE(SE) ARE GIVEN ON THE ALIGNMENT DRAWINGS.
6. THE METHOD OF SUPERELEVATION ATTAININGS AS SHOWN ON THIS DRAWING ACCORD WITH AASHTO 2011.
7. THE DESIGNED IN THIS DRAWING ARE SHOWN FOR CURVE TURN TO THE RIGHT BUT CURVE TURN TO THE LEFT DESIGNS ARE MIRRORED AS DIRECTED BY THE ENGINEER.
8. THE MINIMUM OF LENGTH OF RUNOFF (Lf_{min}) SHALL BE DETERMINED AS;

$$Lf_{min} = \frac{C_w * W_L \times SE.}{\triangle_g}$$

WHERE : $\triangle_g$ VALUES ARE LISTED AS SHOWN ON TABLE 1.

TABLE 1 :

RELATIONSHIP OF DESIGN SPEED TO MAXIMUM RELATIVE PROFILE SLOPES OR MAXIMUM RELATIVE GRADIENTS OF THE SINGLE LANE FROM THE INSIDE EDGE OF TRAVELLED WAY (ROTATION AXIS) OR NORMAL TWO-LANE HIGHWAYS.

DESIGN SPEED KPH.	MAXIMUM RELATIVE SLOPES (1 : S min)	EQUIVALENT MAXIMUM RELATIVE GRADIENTS ($\triangle_g$,%)
20	1 : 125	0.80
30	1 : 133	0.75
40	1 : 143	0.70
50	1 : 154	0.65
60	1 : 167	0.60
70	1 : 182	0.55
80	1 : 200	0.50
90	1 : 213	0.47
100	1 : 227	0.44
110	1 : 244	0.41
120	1 : 263	0.38
130	1 : 286	0.35

9. THE MINIMUM OF TANGENT RUNOUT ($L_{t\ min}$) SHALL BE DETERMINED AS;

$$L_{t\ min} = K \times Lf_{min}$$

WHERE : K VALUES ARE LISTED AS SHOWN ON TABLE 2.

TABLE 2 : PROPORTION OF NORMAL CROWNS OR CROSS SLOPES TO VARIOUS DESIGN SUPERELEVATION RATES, K.

S1 (%)	DESIGN SUPERELEVATION RATES, SE. (%)																	
	1.5	2.0	2.5	3.0	3.5	4.0	4.5	5.0	5.5	6.0	6.5	7.0	7.5	8.0	8.5	9.0	9.5	10.0
1.5	1.000	0.750	0.600	0.500	0.429	0.375	0.333	0.300	0.273	0.250	0.231	0.214	0.200	0.188	0.176	0.167	0.158	0.150
2.0		1.000	0.800	0.667	0.571	0.500	0.444	0.400	0.364	0.333	0.308	0.286	0.267	0.250	0.235	0.222	0.211	0.200
2.5			1.000	0.833	0.714	0.625	0.556	0.500	0.455	0.417	0.385	0.357	0.333	0.313	0.294	0.278	0.263	0.250
3.0				1.000	0.857	0.750	0.667	0.600	0.545	0.500	0.462	0.429	0.400	0.375	0.353	0.333	0.316	0.300
3.5					1.000	0.875	0.778	0.700	0.636	0.583	0.538	0.500	0.467	0.438	0.412	0.389	0.368	0.350

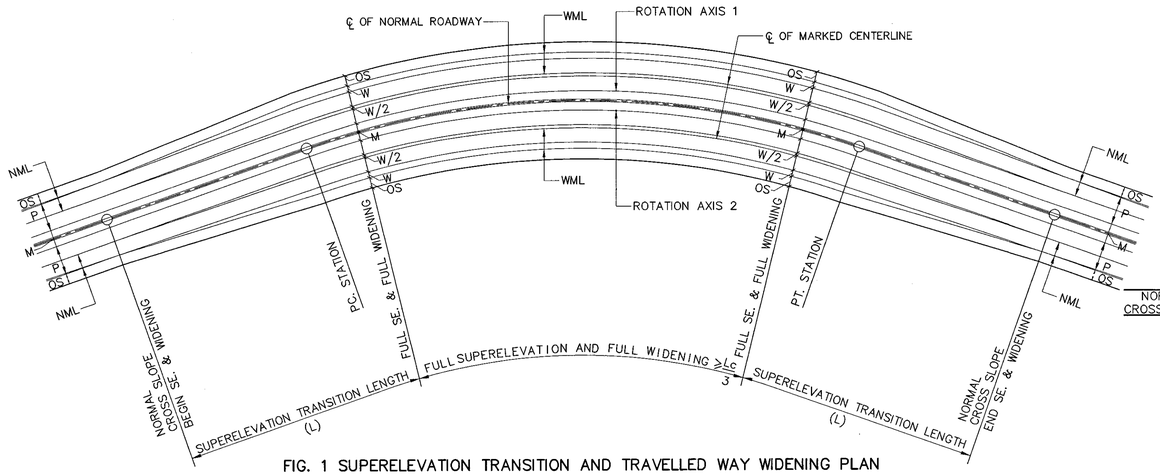

FIG. 1 SUPERELEVATION TRANSITION AND TRAVELLED WAY WIDENING PLAN
(FOR 4 LANES RAISED MEDIAN SECTION FOR CURVE TURN TO THE RIGHT)

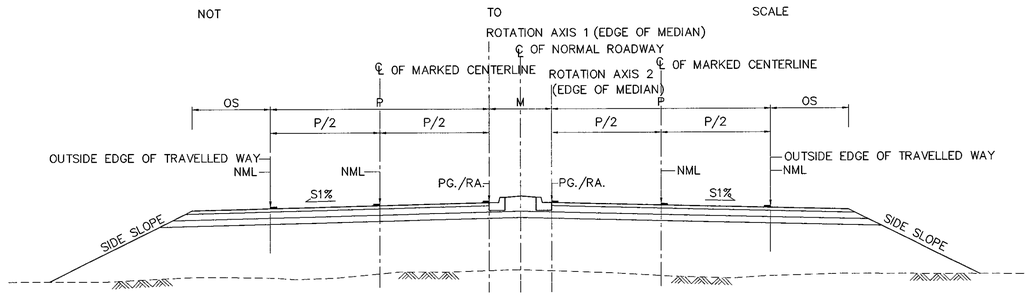

FIG. 2 NORMAL CROWN SECTION

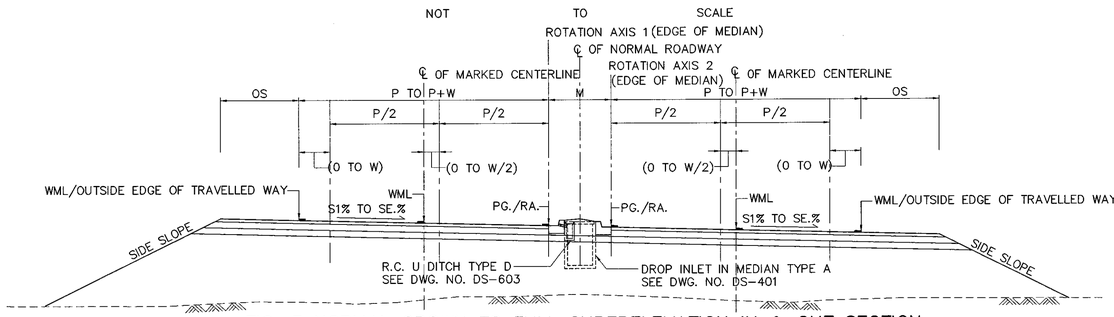

FIG. 3 NORMAL CROWN TO FULL SUPERELEVATION IN & OUT SECTION

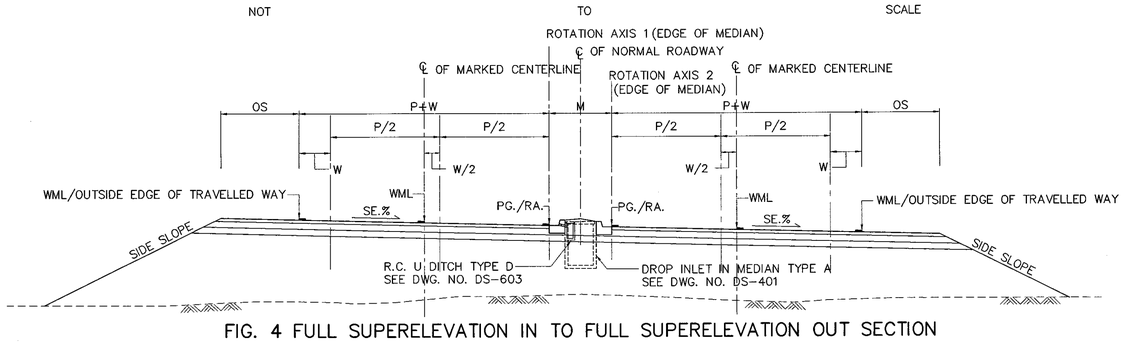

FIG. 4 FULL SUPERELEVATION IN TO FULL SUPERELEVATION OUT SECTION

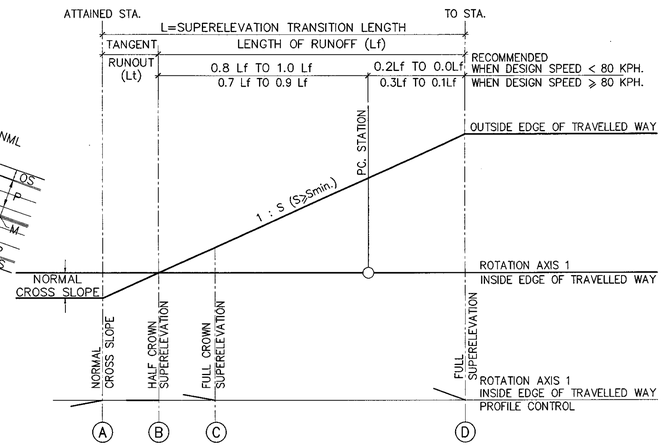

FIG. 5 STRAIGHT CROSS SLOPE
REVOLVED ABOUT ROTATION AXIS 1

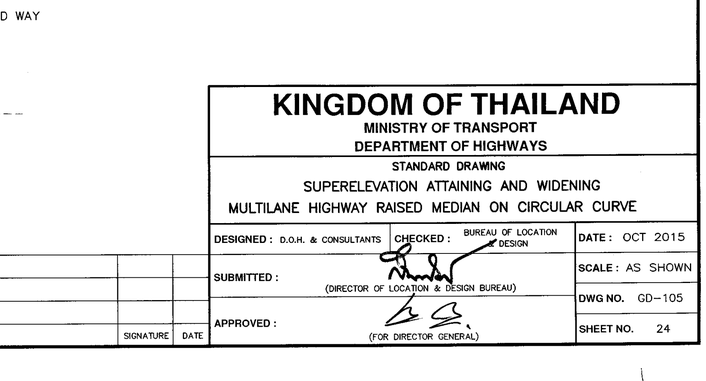

FIG. 6 STRAIGHT CROSS SLOPE
REVOLVED ABOUT ROTATION AXIS 2

REF.	REVISION	SIGNATURE	DATE

KINGDOM OF THAILAND

MINISTRY OF TRANSPORT
DEPARTMENT OF HIGHWAYS

STANDARD DRAWING

SUPERELEVATION ATTAINING AND WIDENING
MULTILANE HIGHWAY RAISED MEDIAN ON CIRCULAR CURVE

DESIGNED : D.O.H. & CONSULTANTS | CHECKED : BUREAU OF LOCATION & DESIGN | DATE : OCT 2015

SUBMITTED : (DIRECTOR OF LOCATION & DESIGN BUREAU) | SCALE : AS SHOWN

APPROVED : (FOR DIRECTOR GENERAL) | DWG NO. GD-105 | SHEET NO. 24

D:\std dwg 2015\GD-105(REV00)

NOTES :

1. THE ROADWAY SHALL BE CONSTRUCTED IN ACCORDANCE WITH DETAILS SHOWN ON THE TYPICAL CROSS-SECTION,PLAN & PROFILE AND THIS DRAWING.
2. THE ABBREVIATIONS USED :

S1	=	NORMAL CROSS SLOPE ,%
SE.	=	DESIGN SUPERELEVATION RATE,%
P	=	TRAVELLED WAY WIDTH
W_L	=	WIDTH OF TRAFFIC LANE
OS	=	OUTER SHOULDER WIDTH
IS	=	INNER SHOULDER WIDTH
M	=	MEDIAN WIDTH
W	=	WIDENING OF TRAVELLED WAY WIDTH
NML	=	NORMAL MARKED LINE
WML	=	WIDEN MARKED LINE
RA.	=	ROTATION AXIS
PG.	=	PROFILE GRADE
L	=	SUPERELEVATION TRANSITION LENGTH
Lc	=	LENGTH OF CIRCULAR CURVE
Lf	=	LENGTH OF RUNOFF
Lt	=	TANGENT RUNOUT LENGTH
$\triangle_g$	=	MAXIMUM RELATIVE GRADIENT,%
N_L	=	NUMBER OF LANES ROTATED
C_w	=	ADJUSTMENT FACTOR ,WHICH INCREASE RELATIVE TO ONE LANE ROTATED.
	=	1.50 FOR TWO LANES ROTATED
	=	2.00 FOR THREE LANES ROTATED
K	=	PROPORTION OF NORMAL CROSS SLOPE TO DESIGN SUPERELEVATION RATE.

3. THE ILLUSTRATED DIAGRAMS IN FIG. 5 AND FIG. 6 ARE FOR THE COMPUTATION OF THE TANGENT RUNOUT LENGTH AND THE LENGTH OF RUNOFF FOR BASIC SINGLE LANE WIDTH (NORMAL TWO LANES HIGHWAY).
4. THIS DRAWING SHALL BE USED IN CONJUNCTION WITH DWG.NO GD-101 AND GD-103.
5. THE REQUIRED WIDENING(W) AND SUPERELEVATION RATE(SE) ARE GIVEN ON THE ALIGNMENT DRAWINGS.
6. THE METHOD OF SUPERELEVATION ATTAININGS AS SHOWN ON THIS DRAWING ACCORD WITH AASHTO 2011.
7. THE DESIGNED IN THIS DRAWING ARE SHOWN FOR CURVE TURN TO THE RIGHT BUT CURVE TURN TO THE LEFT DESIGNS ARE MIRRORED AS DIRECTED BY THE ENGINEER.
8. THE MINIMUM OF LENGTH OF RUNOFF (Lf_{min}) SHALL BE DETERMINED AS;

$$Lf_{min} = \frac{C_w \times W_L \times SE.}{\triangle_g}$$

WHERE : $\triangle_g$ VALUES ARE LISTED AS SHOWN ON TABLE 1.

TABLE 1 :

RELATIONSHIP OF DESIGN SPEED TO MAXIMUM RELATIVE PROFILE SLOPES OR MAXIMUM RELATIVE GRADIENTS OF THE SINGLE LANE FROM THE INSIDE EDGE OF TRAVELLED WAY (ROTATION AXIS) OR NORMAL TWO-LANE HIGHWAYS.

DESIGN SPEED KPH.	MAXIMUM RELATIVE SLOPES (1 : S min)	EQUIVALENT MAXIMUM RELATIVE GRADIENTS ($\triangle_g$,%)
20	1 : 125	0.80
30	1 : 133	0.75
40	1 : 143	0.70
50	1 : 154	0.65
60	1 : 167	0.60
70	1 : 182	0.55
80	1 : 200	0.50
90	1 : 213	0.47
100	1 : 227	0.44
110	1 : 244	0.41
120	1 : 263	0.38
130	1 : 286	0.35

9. THE MINIMUM OF TANGENT RUNOUT ($L_{t\,min}$) SHALL BE DETERMINED AS;

$$L_{t\,min} = K \times Lf_{min}$$

WHERE : K VALUES ARE LISTED AS SHOWN ON TABLE 2.

TABLE 2 : PROPORTION OF NORMAL CROWNS OR CROSS SLOPES TO VARIOUS DESIGN SUPERELEVATION RATES, K.

S1 (%)	DESIGN SUPERELEVATION RATES, SE. (%)																	
	1.5	2.0	2.5	3.0	3.5	4.0	4.5	5.0	5.5	6.0	6.5	7.0	7.5	8.0	8.5	9.0	9.5	10.0
1.5	1.000	0.750	0.600	0.500	0.429	0.375	0.333	0.300	0.273	0.250	0.231	0.214	0.200	0.188	0.176	0.167	0.158	0.150
2.0		1.000	0.800	0.667	0.571	0.500	0.444	0.400	0.364	0.333	0.308	0.286	0.267	0.250	0.235	0.222	0.211	0.200
2.5			1.000	0.833	0.714	0.625	0.556	0.500	0.455	0.417	0.385	0.357	0.333	0.313	0.294	0.278	0.263	0.250
3.0				1.000	0.857	0.750	0.667	0.600	0.545	0.500	0.462	0.429	0.400	0.375	0.353	0.333	0.316	0.300
3.5					1.000	0.875	0.778	0.700	0.636	0.583	0.538	0.500	0.467	0.438	0.412	0.389	0.368	0.350

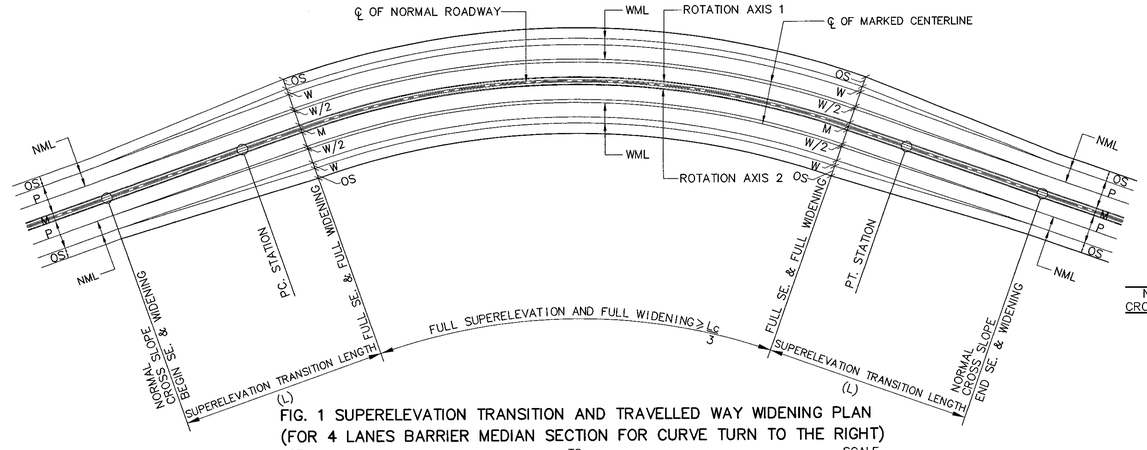

FIG. 1 SUPERELEVATION TRANSITION AND TRAVELLED WAY WIDENING PLAN
(FOR 4 LANES BARRIER MEDIAN SECTION FOR CURVE TURN TO THE RIGHT)
NOT TO SCALE

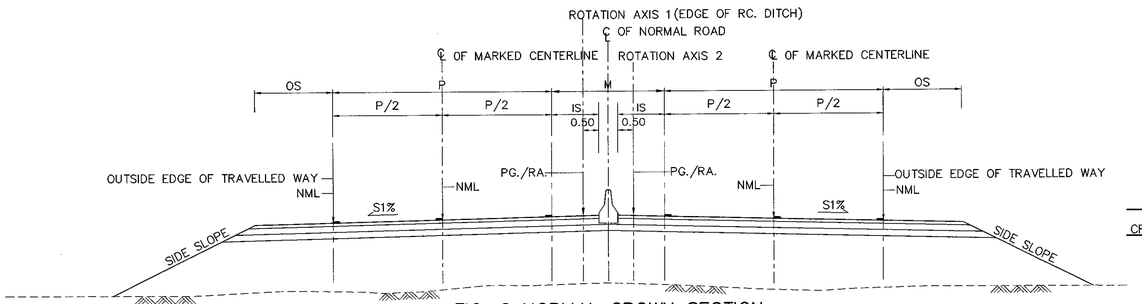

FIG. 2 NORMAL CROWN SECTION
NOT TO SCALE

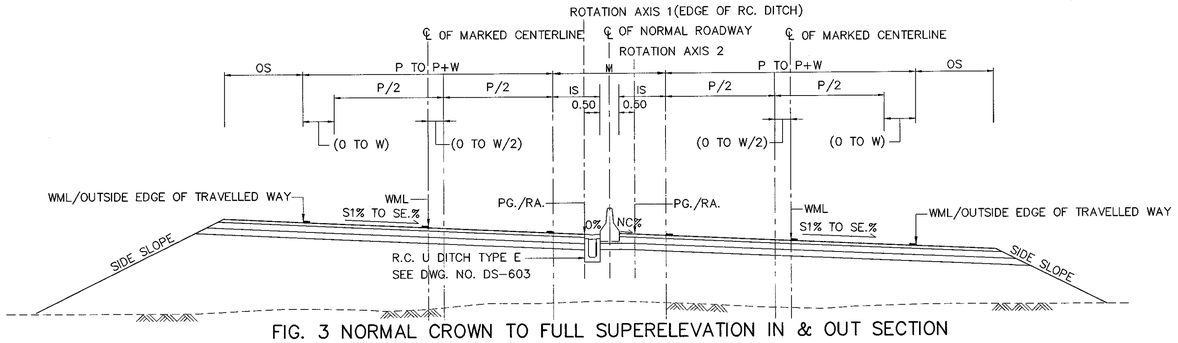

FIG. 3 NORMAL CROWN TO FULL SUPERELEVATION IN & OUT SECTION
NOT TO SCALE

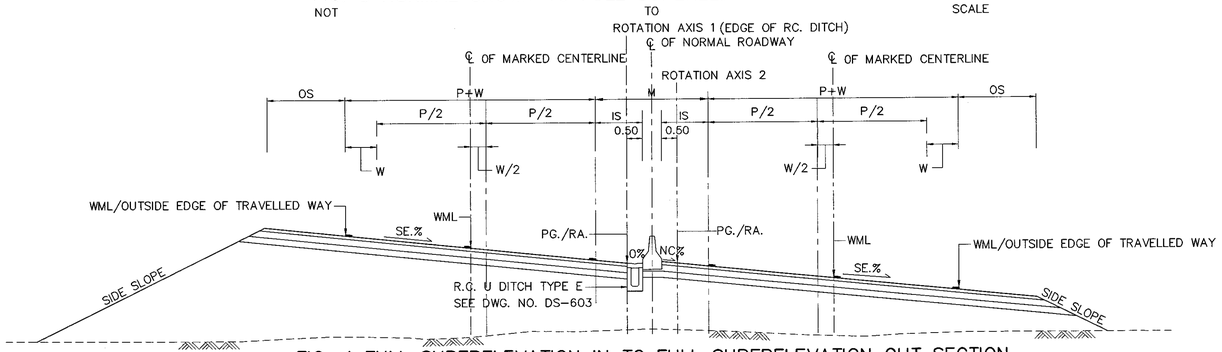

FIG. 4 FULL SUPERELEVATION IN TO FULL SUPERELEVATION OUT SECTION
NOT TO SCALE

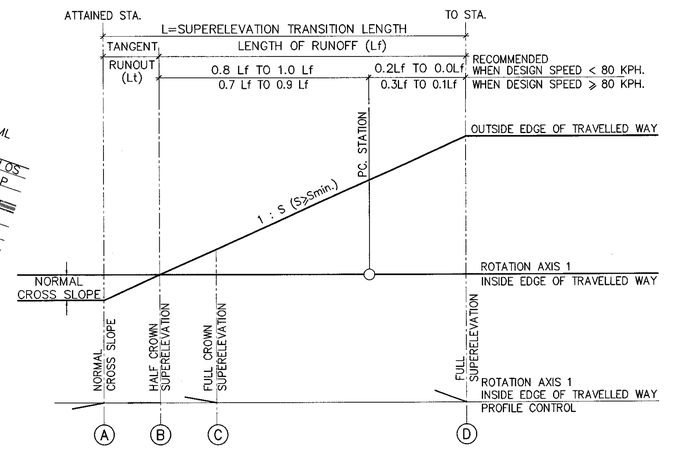

FIG. 5 STRAIGHT CROSS SLOPE
REVOLVED ABOUT ROTATION AXIS 1

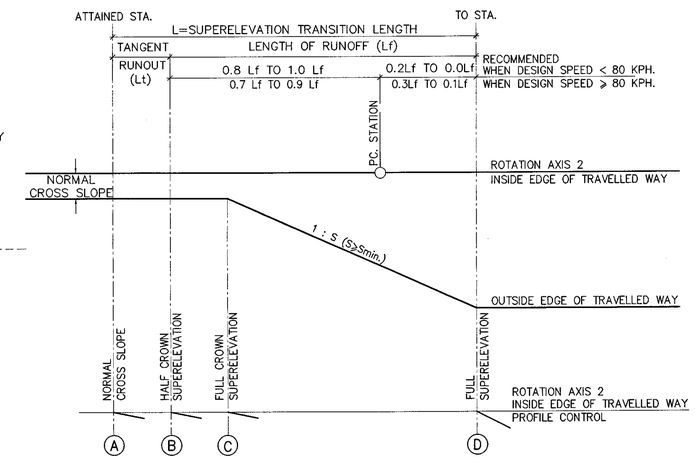

FIG. 6 STRAIGHT CROSS SLOPE
REVOLVED ABOUT ROTATION AXIS 2

KINGDOM OF THAILAND

MINISTRY OF TRANSPORT
DEPARTMENT OF HIGHWAYS

STANDARD DRAWING

SUPERELEVATION ATTAINING AND WIDENING
MULTILANE HIGHWAY BARRIER MEDIAN ON CIRCULAR CURVE

DESIGNED : D.O.H. & CONSULTANTS	CHECKED : BUREAU OF LOCATION & DESIGN		DATE : OCT 2015
SUBMITTED :	(DIRECTOR OF LOCATION & DESIGN BUREAU)		SCALE : AS SHOWN
APPROVED :	(FOR DIRECTOR GENERAL)		DWG NO. GD-106
			SHEET NO. 25

REF.	REVISION	SIGNATURE	DATE

D:\std dwg 2015\GD-106(REV00)

NOTES :

1. THE ROADWAY SHALL BE CONSTRUCTED IN ACCORDANCE WITH DETAILS SHOWN ON THE TYPICAL CROSS-SECTION,PLAN & PROFILE AND THIS DRAWING.
2. THE ABBREVIATIONS USED :

S1	=	NORMAL CROSS SLOPE ,%
SE.	=	DESIGN SUPERELEVATION RATE ,%
P	=	TRAVELLED WAY WIDTH
W_L	=	WIDTH OF TRAFFIC LANE
OS	=	OUTER SHOULDER WIDTH
IS	=	INNER SHOULDER WIDTH
M	=	MEDIAN WIDTH
W	=	WIDENING OF TRAVELLED WAY WIDTH
NML	=	NORMAL MARKED LINE
WML	=	WIDEN MARKED LINE
RA.	=	ROTATION AXIS
PG.	=	PROFILE GRADE
L	=	SUPERELEVATION TRANSITION LENGTH
Ls	=	LENGTH OF SPIRAL CURVE
Lf	=	LENGTH OF RUNOFF
L_t	=	TANGENT RUNOUT LENGTH
Δ_g	=	MAXIMUM RELATIVE GRADIENT,%
N_L	=	NUMBER OF LANES ROTATED
C_w	=	ADJUSTMENT FACTOR ,WHICH INCREASE RELATIVE TO ONE LANE ROTATED.
	=	1.50 FOR TWO LANES ROTATED
	=	2.00 FOR THREE LANES ROTATED
K	=	PROPORTION OF NORMAL CROSS SLOPE TO DESIGN SUPERELEVATION RATE.
TS.	=	TANGENT TO SPIRAL
ST.	=	SPIRAL TO TANGENT
SC.	=	SPIRAL TO CURVE
CS.	=	CURVE TO SPIRAL

3. THE ILLUSTRATED DIAGRAMS IN FIG. 5 AND FIG. 6 ARE FOR THE COMPUTATION OF THE TANGENT RUNOUT LENGTH AND THE LENGTH OF RUNOFF FOR BASIC SINGLE LANE WIDTH (NORMAL TWO LANES HIGHWAY).
4. THE LENGTH OF SPIRAL (Ls) SHALL SET EQUAL TO THE LENGTH OF RUNOFF (Lf).
5. THE REQUIRED WIDENING(W) AND SUPERELEVATION RATE(SE) ARE GIVEN ON THE ALIGNMENT DRAWINGS.
6. THE METHOD OF SUPERELEVATION ATTAININGS AS SHOWN ON THIS DRAWING ACCORD WITH AASHTO 2011.
7. THE DESIGNED IN THIS DRAWING ARE SHOWN FOR CURVE TURN TO THE RIGHT BUT CURVE TURN TO THE LEFT DESIGNS ARE MIRRORED AS DIRECTED BY THE ENGINEER.
8. THE MINIMUM OF LENGTH OF RUNOFF (Lf_{min}) SHALL BE DETERMINED AS;

$$Lf_{min} = \frac{C_w \cdot W_L \times SE.}{\Delta_g}$$

WHERE : Δ_g VALUES ARE LISTED AS SHOWN ON TABLE 1.

TABLE 1 :

RELATIONSHIP OF DESIGN SPEED TO MAXIMUM RELATIVE PROFILE SLOPES OR MAXIMUM RELATIVE GRADIENTS OF THE SINGLE LANE FROM THE INSIDE EDGE OF TRAVELLED WAY (ROTATION AXIS) OR NORMAL TWO-LANE HIGHWAYS.

DESIGN SPEED KPH.	MAXIMUM RELATIVE SLOPES (1 : S min)	EQUIVALENT MAXIMUM RELATIVE GRADIENTS (Δ_g,%)
20	1 : 125	0.80
30	1 : 133	0.75
40	1 : 143	0.70
50	1 : 154	0.65
60	1 : 167	0.60
70	1 : 182	0.55
80	1 : 200	0.50
90	1 : 213	0.47
100	1 : 227	0.44
110	1 : 244	0.41
120	1 : 263	0.38
130	1 : 286	0.35

9. THE MINIMUM OF TANGENT RUNOUT ($L_{t\ min}$) SHALL BE DETERMINED AS;

$$L_{t\ min} = K \times Lf_{min}$$

WHERE : K VALUES ARE LISTED AS SHOWN ON TABLE 2.

TABLE 2 : PROPORTION OF NORMAL CROWNS OR CROSS SLOPES TO VARIOUS DESIGN SUPERELEVATION RATES, K.

S1 (%)	DESIGN SUPERELEVATION RATES, SE. (%)																	
	1.5	2.0	2.5	3.0	3.5	4.0	4.5	5.0	5.5	6.0	6.5	7.0	7.5	8.0	8.5	9.0	9.5	10.0
1.5	1.000	0.750	0.600	0.500	0.429	0.375	0.333	0.300	0.273	0.250	0.231	0.214	0.200	0.188	0.176	0.167	0.158	0.150
2.0		1.000	0.800	0.667	0.571	0.500	0.444	0.400	0.364	0.333	0.308	0.286	0.267	0.250	0.235	0.222	0.211	0.200
2.5			1.000	0.833	0.714	0.625	0.556	0.500	0.455	0.417	0.385	0.357	0.333	0.313	0.294	0.278	0.263	0.250
3.0				1.000	0.857	0.750	0.667	0.600	0.545	0.500	0.462	0.429	0.400	0.375	0.353	0.333	0.316	0.300
3.5					1.000	0.875	0.778	0.700	0.636	0.583	0.538	0.500	0.467	0.438	0.412	0.389	0.368	0.350

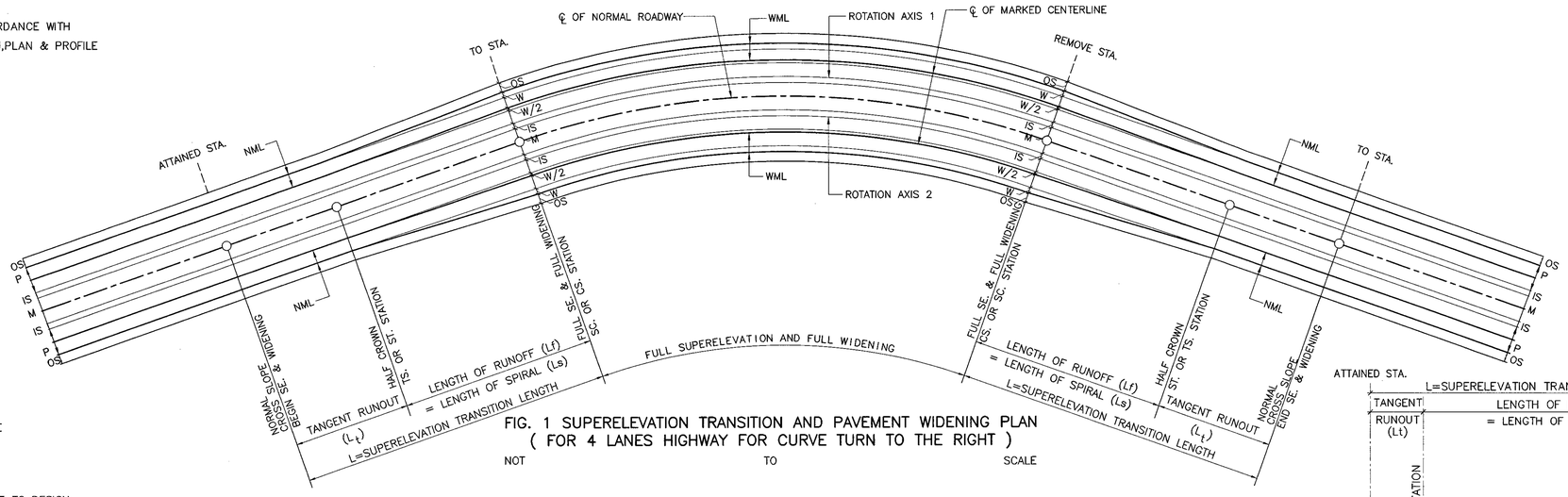

FIG. 1 SUPERELEVATION TRANSITION AND PAVEMENT WIDENING PLAN
(FOR 4 LANES HIGHWAY FOR CURVE TURN TO THE RIGHT)
NOT TO SCALE

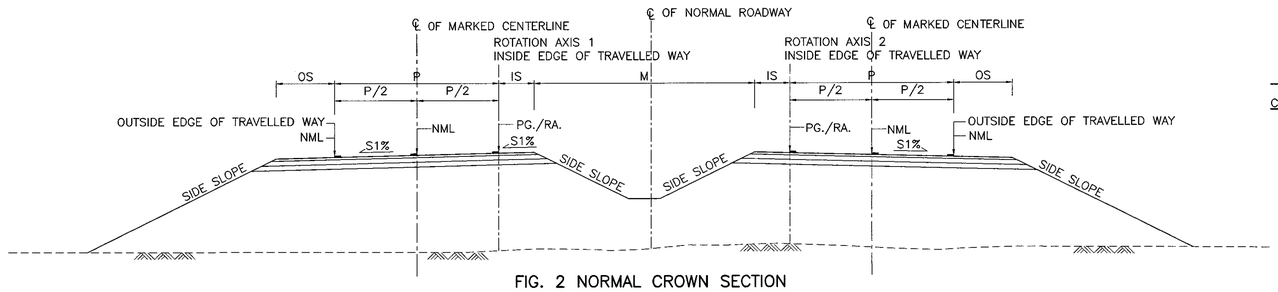

FIG. 2 NORMAL CROWN SECTION
NOT TO SCALE

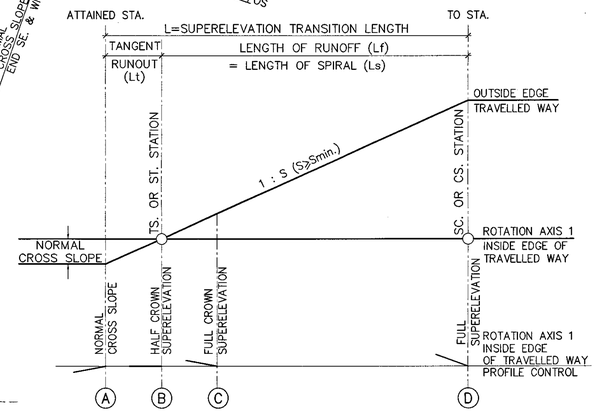

FIG. 5 STRAIGHT CROSS SLOPE
REVOLVED ABOUT ROTATION AXIS 1

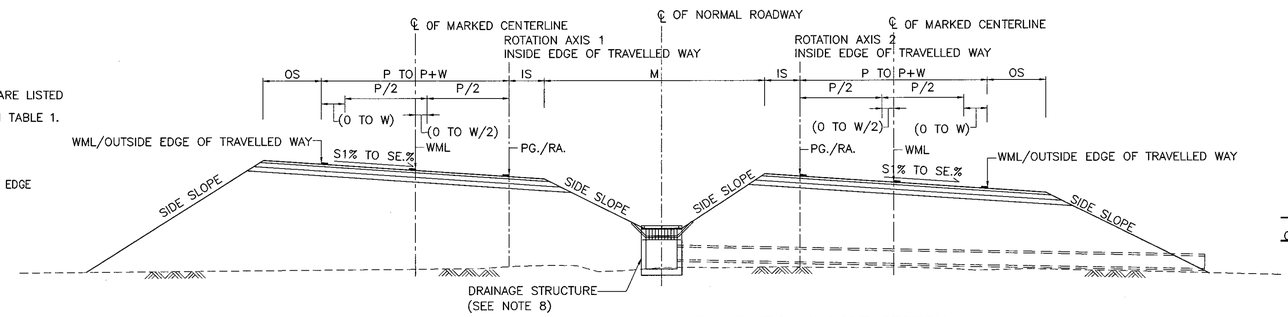

FIG. 3 NORMAL CROWN TO FULL SUPERELEVATION IN&OUT SECTION
NOT TO SCALE

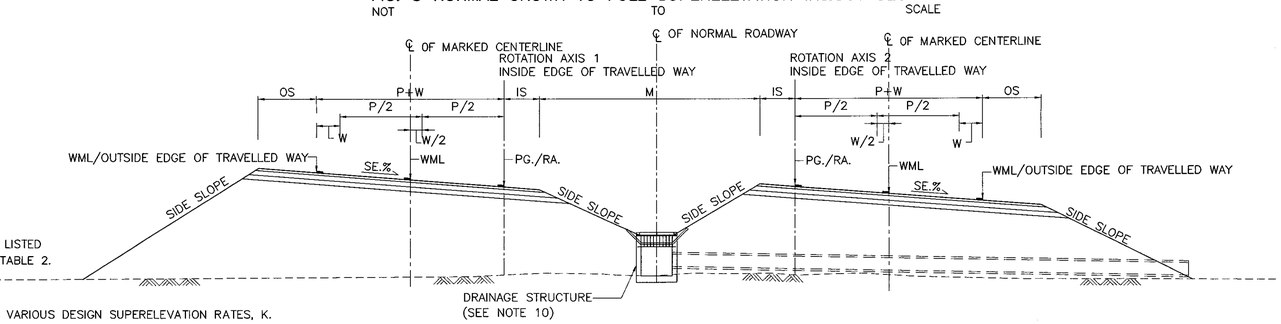

10. THE DRAINAGE STRUCTURE AS SHOWN ON THIS DRAWING IS GUIDANCE ONLY SUITABLE DRAINAGE STRUCTURE SHALL BE DESIGNED CONFORM TO TYPE OF MEDAIN AND THE PAVEMENT WIDTH.

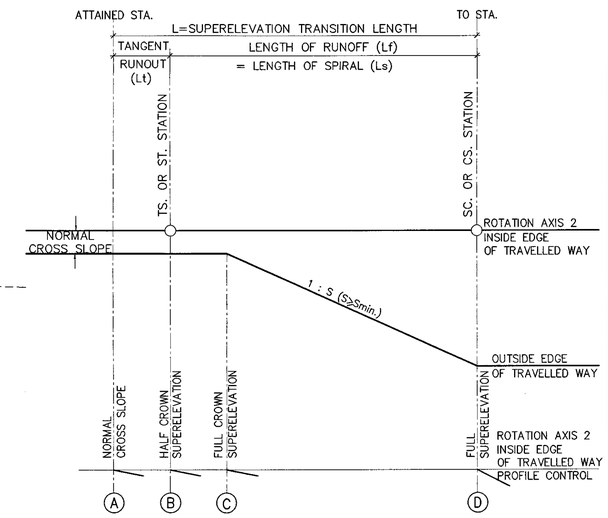

FIG. 6 STRAIGHT CROSS SLOPE
REVOLVED ABOUT ROTATION AXIS 2

REF.	REVISION	SIGNATURE	DATE

KINGDOM OF THAILAND

MINISTRY OF TRANSPORT
DEPARTMENT OF HIGHWAYS

STANDARD DRAWING

SUPERELEVATION ATTAINING AND WIDENING
MULTILANE HIGHWAY ON SPIRAL CURVE

DESIGNED : D.O.H. & CONSULTANTS	CHECKED : BUREAU OF LOCATION & DESIGN	DATE : OCT 2015
SUBMITTED : (DIRECTOR OF LOCATION & DESIGN BUREAU)		SCALE : AS SHOWN
APPROVED : (FOR DIRECTOR GENERAL)		DWG NO. GD-107
		SHEET NO. 26

D:\std dwg 2015\GD-107(REV00)

CALCULATED AND DESIGN VALUES FOR 2-LANE TRAVELLED WAY WIDENING (ONE-WAY OR TWO-WAY)

RADIUS OF CURVE (M.)	WB-19																	SU-12															RADIUS OF CURVE (M.)
	TRAVELLED WAY WIDTH = 7.20 M.									TRAVELLED WAY WIDTH = 7.00 M.								TRAVELLED WAY WIDTH = 7.00 M.									TRAVELLED WAY WIDTH = 6.00 M.								
	DESIGN SPEED (KM./H.)									DESIGN SPEED (KM./H.)								DESIGN SPEED (KM./H.)									DESIGN SPEED (KM./H.)								
	40	50	60	70	80	90	100	110	120	40	50	60	70	80	90	100	110	120	40	50	60	70	80	90	100	110	120	40	50	60	70	80	90	100	110	120	
3000	0.00	0.00	0.00	0.00	0.00	0.00	0.00	0.05	0.07	0.12	0.14	0.16	0.18	0.19	0.21	0.23	0.25	0.27	0.00	0.00	0.00	0.00	0.00	0.00	0.00	0.00	0.00	1.00	1.00	1.00	1.00	1.00	1.00	1.00	1.00	1.00	3000
2500	0.00	0.00	0.00	0.00	0.00	0.00	0.06	0.08	0.10	0.14	0.16	0.18	0.20	0.22	0.24	0.26	0.28	0.50	0.00	0.00	0.00	0.00	0.00	0.00	0.00	0.00	0.00	1.00	1.00	1.00	1.00	1.00	1.00	1.00	1.00	1.00	2500
2000	0.00	0.00	0.00	0.00	0.06	0.08	0.11	0.13	0.15	0.17	0.20	0.22	0.24	0.26	0.28	0.50	0.50	0.50	0.00	0.00	0.00	0.00	0.00	0.00	0.00	0.00	0.00	1.00	1.00	1.00	1.00	1.00	1.00	1.25	1.25	1.25	2000
1500	0.00	0.05	0.07	0.10	0.12	0.15	0.18	0.20	0.23	0.22	0.25	0.27	0.50	0.50	0.50	0.50	0.50	0.50	0.00	0.00	0.00	0.00	0.00	0.00	0.00	0.10	0.13	1.00	1.00	1.00	1.00	1.25	1.25	1.25	1.25	1.25	1500
1000	0.11	0.14	0.18	0.21	0.24	0.27	0.50	0.50	0.50	0.50	0.50	0.50	0.50	0.50	0.50	0.50	0.75	0.75	0.00	0.00	0.00	0.00	0.14	0.17	0.21	0.24	0.27	1.25	1.25	1.25	1.25	1.25	1.25	1.25	1.50	1.50	1000
900	0.14	0.18	0.21	0.24	0.28	0.50	0.50	0.50	0.50	0.50	0.50	0.50	0.50	0.50	0.75	0.75	0.75	0.75	0.00	0.00	0.00	0.00	0.18	0.21	0.25	0.28	0.50	1.25	1.25	1.25	1.25	1.25	1.25	1.25	1.50	1.50	900
800	0.18	0.22	0.25	0.29	0.50	0.50	0.50	0.50	0.50	0.50	0.50	0.50	0.50	0.75	0.75	0.75	0.75	0.75	0.00	0.00	0.00	0.19	0.22	0.26	0.29	0.50	0.50	1.25	1.25	1.25	1.25	1.25	1.50	1.50	1.50	1.50	800
700	0.23	0.26	0.50	0.50	0.50	0.50	0.50	0.50	0.75	0.50	0.50	0.50	0.75	0.75	0.75	0.75	0.75	0.75	0.00	0.00	0.21	0.24	0.28	0.50	0.50	0.50	0.50	1.25	1.25	1.25	1.25	1.50	1.50	1.50	1.50	1.50	700
600	0.29	0.50	0.50	0.50	0.50	0.50	0.75	0.75	0.75	0.50	0.75	0.75	0.75	0.75	0.75	0.75	1.00	1.00	0.00	0.00	0.27	0.50	0.50	0.50	0.50	0.50	0.75	1.25	1.25	1.50	1.50	1.50	1.50	1.50	1.50	1.75	600
500	0.50	0.50	0.50	0.75	0.75	0.75	0.75	0.75	0.75	0.75	0.75	0.75	0.75	0.75	1.00	1.00	1.00	1.00	0.00	0.50	0.50	0.50	0.50	0.50	0.75	0.75	0.75	1.50	1.50	1.50	1.50	1.50	1.75	1.75	1.75	1.75	500
400	0.50	0.75	0.75	0.75	0.75	0.75	1.00	1.00		0.75	0.75	1.00	1.00	1.00	1.00	1.00	1.25		0.50	0.50	0.50	0.75	0.75	0.75	0.75	0.75		1.50	1.50	1.50	1.75	1.75	1.75	1.75	1.75		400
300	0.75	1.00	1.00	1.00	1.00	1.00	1.25			1.00	1.00	1.25	1.25	1.25	1.25	1.25			0.75	0.75	0.75	1.00	1.00	1.00	1.00			1.75	1.75	1.75	2.00	2.00	2.00	2.00			300
250	1.00	1.00	1.00	1.25	1.25	1.25				1.25	1.25	1.25	1.50	1.50					1.00	1.00	1.00	1.00	1.25	1.25				2.00	2.00	2.00	2.00	2.25	2.25				250
200	1.25	1.25	1.25	1.50	1.50					1.50	1.50	1.50	1.75	1.75					1.25	1.25	1.25	1.25	1.50					2.25	2.25	2.25	2.25	2.50					200
150	1.50	1.75	1.75	1.75	2.00					1.75	2.00	2.00	2.00	2.25					1.50	1.50	1.75	1.75	1.75					2.50	2.50	2.75	2.75	2.75					150
140	1.75	1.75	2.00	2.00						2.00	2.00	2.00	2.25						1.75	1.75	1.75	2.00						2.75	2.75	2.75	3.00						140
130	1.75	2.00	2.00							2.00	2.25	2.25							1.75	1.75	2.00							2.75	2.75	3.00							130
120	2.00	2.00	2.25							2.25	2.25	2.50							2.00	2.00	2.00							3.00	3.00	3.00							120
110	2.25	2.25	2.25							2.25	2.50	2.50							2.00	2.25	2.25							3.00	3.25	3.25							110
100	2.50	2.50	2.50							2.50	2.75	2.75							2.25	2.50	2.50							3.25	3.50	3.50							100
90	2.75	2.75	2.75							2.75	3.00	3.00							2.50	2.75	2.75							3.50	3.75	3.75							90
80	3.00	3.00								3.25	3.25								3.00	3.00								4.00	4.00								80
70	3.25	3.50								3.50	3.75								3.25	3.50								4.25	4.50								70
60	4.00	4.00								4.00	4.25								4.00	4.00								4.75	5.00								60
50	4.75									5.00									4.50									5.50									50

NOTES : 1. VALUES EQUAL OR LESS THAN 0.30 M. MAY BE DISREGARDED.
2. VALUES BETWEEN 0.30 TO 0.50 M. SHALL BE 0.50 M.
3. VALUES GREATER THAN 0.50 M. SHALL BE ROUNDUP EVERY 0.25 M. EXAMPLE: VALUE IS 0.57 M SHALL BE ROUNDUP TO 0.75 M
4. FOR 3-LANE TRAVELLED WAY, MULTIPLY ABOVE VALUES BY 1.5
5. FOR 4-LANE TRAVELLED WAY, MULTIPLY ABOVE VALUES BY 2.0

WIDENING DESIGN FORMULA

$$w = Wc - Wn$$

WHERE
w = WIDENING OF TRAVELLED WAY ON CURVE, M.
Wc = WIDTH OF TRAVELLED WAY ON CURVE, M.
Wn = WIDTH OF TRAVELLED WAY ON TANGENT, M.

$$Wc = N(U+C)+(N-1)F_A+Z$$

WHERE
N = NUMBER OF LANE
U = TRACK WIDTH OF DESIGN VEHICLE, M.
C = LATERAL CLEARANCE, M. (C=0.90 M. FOR WB-19 AND SU-12)
F_A = WIDTH OF FRONT OVERHANG OF INNER-LANE VEHICLE, M.
Z = EXTRA WIDTH ALLOWANCE, M.

$$U = u+R-\sqrt{R^2-\sum L_i^2}$$

WHERE
U = TRACK WIDTH ON CURVE, M.
u = TRACK WIDTH ON TANGENT, M. (u=2.59 M. FOR WB-19 AND u=2.44 M. FOR SU-12)
R = RADIUS OF CURVE OR TURN, M.
Li = WHEELBASE OF DESIGN VEHICLE BETWEEN CONSECUTION AXLES AND ARTICULATION POINTS, M.

$$F_A = \sqrt{R^2+A(2L+A)}-R$$

WHERE
A = FRONT OVERHANG OF INNER LANE VEHICLE, M. (A=1.22 M. FOR WB-19 AND A=1.22 M. FOR SU-12)
L = WHEELBASE OF SINGLE UNIT OR TRACTOR, M. (L=5.94 M. FOR WB-19 AND L=7.62 M. FOR SU-12)

$$Z = 0.1(V/\sqrt{R})$$

WHERE
V = DESIGN SPEED, KM./H.

NOTES :

EXHIBIT I ILLUSTRATES WB-19 AND SU-12 DESIGN VEHICLE.
EXHIBIT II ILLUSTRATES THE DIFFERENCE IN RELATIVE WIDTHS BETWEEN GROUP OF DESIGN VEHICLES.
EXHIBIT III ILLUSTRATES RELATIVE OVERHANG WIDTH VALUE FOR F_A.
EXHIBIT IV ILLUSTRATES THE COMPUTED VALUES FOR Z.

REFERENCE :

A POLICY ON GEOMETRIC DESIGN OF HIGHWAYS AND STREETS 2011, AASHTO.

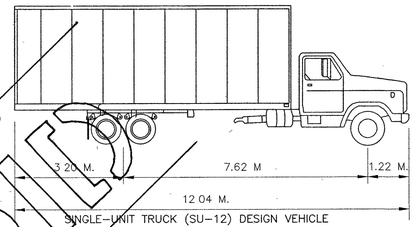

SINGLE-UNIT TRUCK (SU-12) DESIGN VEHICLE

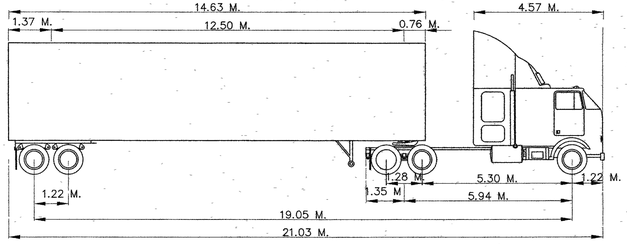

INTERMEDIATE SEMITRAILER (WB-19) DESIGN VEHICLE

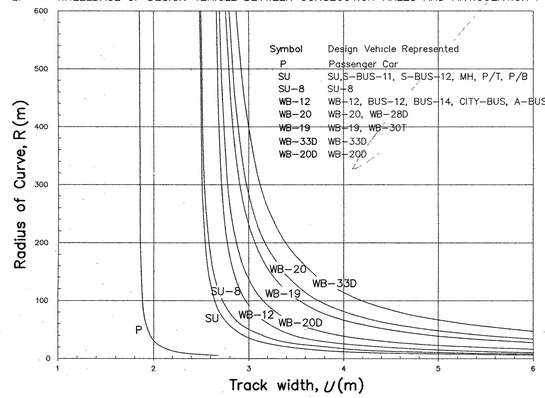

EXHIBIT II : TRACK WIDTH FOR WIDENING OF TRAVELLED WAY ON CURVES

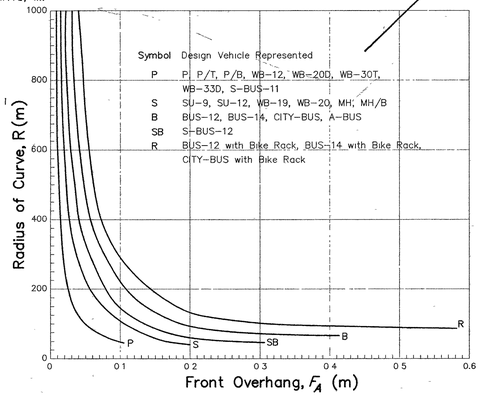

EXHIBIT III : FRONT OVERHANG FOR WIDENING OF TRAVELLED WAY ON CURVES

EXHIBIT I : DESIGN VEHICLE (AASHTO)

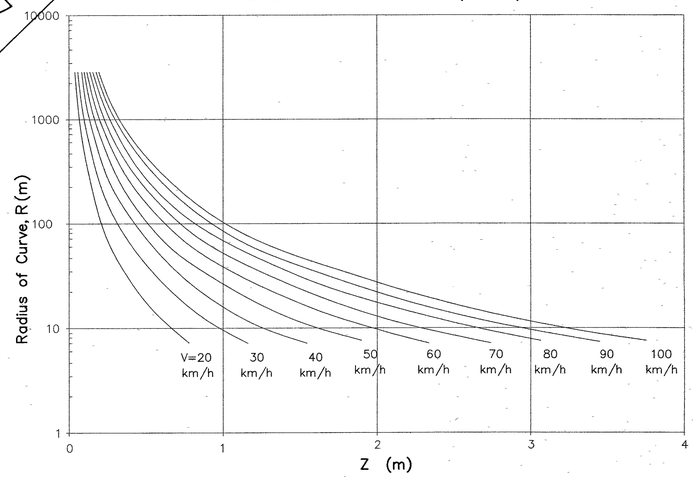

EXHIBIT IV : EXTRA WIDTH ALLOWANCE FOR DIFFICULTY OF DRIVING ON TRAVELLED WAY ON CURVES

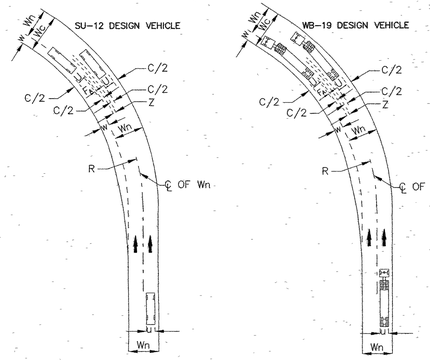

KINGDOM OF THAILAND

MINISTRY OF TRANSPORT
DEPARTMENT OF HIGHWAYS

STANDARD DRAWING

TRAVELLED WAY WIDENNING DETAILS
FOR WB-19 AND SU-12 DESIGN VEHICLE

DESIGNED : D.O.H. & CONSULTANTS	CHECKED : BUREAU OF LOCATION & DESIGN	DATE : OCT 2015
SUBMITTED : (DIRECTOR OF LOCATION & DESIGN BUREAU)		SCALE : AS SHOWN
APPROVED : (FOR DIRECTOR GENERAL)		DWG NO. GD-201
		SHEET NO. 27

REF.	REVISION	SIGNATURE	DATE

D:\std dwg 2015\GD-201(REV00)

VOID

CALCULATED AND DESIGN VALUES FOR 2–LANE TRAVELLED WAY WIDENING (ONE–WAY OR TWO–WAY)

RADIUS OF CURVE (M.)	WB–19																			SU–12																RADIUS OF CURVE (M.)
	TRAVELLED WAY WIDTH = 7.20 M.									TRAVELLED WAY WIDTH = 7.00 M.										TRAVELLED WAY WIDTH = 7.00 M.									TRAVELLED WAY WIDTH = 6.00 M.									
	DESIGN SPEED (KM./H.)									DESIGN SPEED (KM./H.)										DESIGN SPEED (KM./H.)									DESIGN SPEED (KM./H.)									
	40	50	60	70	80	90	100	110	120	40	50	60	70	80	90	100	110	120		40	50	60	70	80	90	100	110	120	40	50	60	70	80	90	100	110	120	
3000	0.00	0.00	0.00	0.00	0.00	0.00	0.02	0.04	0.06	0.11	0.13	0.15	0.17	0.19	0.20	0.22	0.24	0.26		0.00	0.00	0.00	0.00	0.00	0.00	0.00	0.00	0.00	1.00	1.00	1.00	1.00	1.00	1.00	1.00	1.00	1.00	3000
2500	0.00	0.00	0.00	0.00	0.02	0.04	0.06	0.08	0.10	0.14	0.16	0.18	0.20	0.22	0.24	0.26	0.28	0.50		0.00	0.00	0.00	0.00	0.00	0.00	0.00	0.00	0.00	1.00	1.00	1.00	1.00	1.00	1.00	1.00	1.00	1.00	2500
2000	0.00	0.00	0.01	0.04	0.06	0.08	0.10	0.13	0.15	0.17	0.20	0.22	0.24	0.26	0.28	0.50	0.50	0.50		0.00	0.00	0.00	0.00	0.00	0.00	0.00	0.00	0.00	1.00	1.00	1.00	1.00	1.00	1.00	1.00	1.00	1.00	2000
1500	0.01	0.04	0.06	0.09	0.12	0.14	0.17	0.19	0.22	0.21	0.24	0.26	0.29	0.32	0.34	0.50	0.50	0.50		0.00	0.00	0.00	0.00	0.00	0.00	0.00	0.01	0.04	1.00	1.00	1.00	1.00	1.00	1.00	1.00	1.25	1.25	1500
1000	0.12	0.15	0.18	0.21	0.24	0.27	0.50	0.50	0.50	0.50	0.50	0.50	0.50	0.50	0.50	0.75	0.75	0.75		0.00	0.00	0.00	0.00	0.00	0.03	0.07	0.10	0.13	1.00	1.00	1.00	1.00	1.00	1.25	1.25	1.25	1.25	1000
900	0.14	0.18	0.21	0.24	0.28	0.50	0.50	0.50	0.50	0.50	0.50	0.50	0.50	0.50	0.75	0.75	0.75	0.75		0.00	0.00	0.00	0.00	0.02	0.05	0.08	0.12	0.15	1.00	1.00	1.00	1.00	1.25	1.25	1.25	1.25	1.25	900
800	0.17	0.21	0.24	0.28	0.50	0.50	0.50	0.50	0.50	0.50	0.50	0.50	0.50	0.75	0.75	0.75	0.75	0.75		0.00	0.00	0.00	0.02	0.05	0.09	0.12	0.16	0.19	1.00	1.00	1.00	1.25	1.25	1.25	1.25	1.25	1.25	800
700	0.22	0.26	0.50	0.50	0.50	0.50	0.50	0.50	0.75	0.50	0.50	0.50	0.75	0.75	0.75	0.75	0.75	0.75		0.00	0.00	0.00	0.03	0.07	0.11	0.15	0.19	0.22	1.00	1.00	1.00	1.25	1.25	1.25	1.25	1.25	1.25	700
600	0.27	0.50	0.50	0.50	0.50	0.50	0.75	0.75	0.75	0.50	0.75	0.75	0.75	0.75	0.75	0.75	1.00	1.00		0.00	0.00	0.04	0.09	0.13	0.17	0.21	0.25	0.29	1.00	1.00	1.25	1.25	1.25	1.25	1.25	1.25	1.50	600
500	0.50	0.50	0.50	0.50	0.75	0.75	0.75	0.75	0.75	0.75	0.75	0.75	0.75	0.75	1.00	1.00	1.00	1.00		0.00	0.04	0.09	0.13	0.18	0.22	0.25	0.50	0.50	1.00	1.25	1.25	1.25	1.25	1.25	1.50	1.50	1.50	500
400	0.50	0.75	0.75	0.75	0.75	0.75	1.00			0.75	0.75	1.00	1.00	1.00	1.00	1.00				0.05	0.10	0.15	0.20	0.25	0.50	0.50			1.25	1.25	1.25	1.25	1.25	1.50	1.50			400
300	0.75	0.75	1.00	1.00	1.00	1.00				1.00	1.00	1.00	1.25	1.25	1.25					0.14	0.20	0.26	0.50	0.50	0.50				1.25	1.25	1.50	1.50	1.50	1.50				300
250	1.00	1.00	1.00	1.25	1.25					1.25	1.25	1.25	1.25	1.50						0.21	0.28	0.50	0.50	0.50					1.25	1.50	1.50	1.50	1.50					250
200	1.25	1.25	1.25	1.50	1.50					1.25	1.25	1.25	1.50	1.50						0.50	0.50	0.50	0.75	0.75					1.50	1.50	1.50	1.75	1.75					200
150	1.50	1.75	1.75	1.75						1.75	1.75	2.00	2.00							0.50	0.75	0.75	0.75						1.50	1.75	1.75	1.75						150
140	1.75	1.75	1.75							2.00	2.00	2.00								0.75	0.75	0.75							1.75	1.75	1.75							140
130	1.75	2.00	2.00							2.00	2.00	2.25								0.75	0.75	0.75							1.75	1.75	1.75							130
120	2.00	2.00	2.00							2.25	2.25	2.25								0.75	0.75	1.00							1.75	1.75	2.00							120
110	2.00	2.25	2.25							2.25	2.50	2.50								0.75	1.00	1.00							1.75	2.00	2.00							110
100	2.25	2.50	2.50							2.50	2.50	2.75								1.00	1.00	1.00							2.00	2.00	2.00							100
90	2.50	2.75								2.75	3.00									1.00	1.00								2.00	2.00								90
80	2.75	3.00								3.00	3.25									1.00	1.25								2.00	2.25								80
70	3.25	3.25								3.50	3.50									1.25	1.50								2.25	2.50								70
60	3.75									4.00										1.50									2.50									60
50	4.50									4.75										1.75									2.75									50
40	5.75									5.75										2.25									3.25									40

NOTES : 1. VALUES EQUAL OR LESS THAN 0.30 M. MAY BE DISREGARDED.
2. VALUES BETWEEN 0.30 TO 0.50 M. SHALL BE 0.50 M.
3. VALUES GREATER THAN 0.50 M. SHALL BE ROUNDUP EVERY 0.25 M. EXAMPLE: VALUE IS 0.57 M.SHALL BE ROUNDUP TO 0.75 M.
4. FOR 3–LANE TRAVELLED WAY, MULTIPLY ABOVE VALUES BY 1.5
5. FOR 4–LANE TRAVELLED WAY, MULTIPLY ABOVE VALUES BY 2.0

WIDENING DESIGN FORMULA

$$w = Wc - Wn$$

WHERE
w = WIDENING OF TRAVELLED WAY ON CURVE, M.
Wc = WIDTH OF TRAVELLED WAY ON CURVE, M.
Wn = WIDTH OF TRAVELLED WAY ON TANGENT, M.

$$Wc = N(U+C)+(N-1)F_A+Z$$

WHERE
N = NUMBER OF LANE
U = TRACK WIDTH OF DESIGN VEHICLE, M.
C = LATERAL CLEARANCE, M. (C=0.90 M. FOR WB–19 AND SU–12)
F_A = WIDTH OF FRONT OVERHANG OF INNER–LANE VEHICLE, M.
Z = EXTRA WIDTH ALLOWANCE, M.

$$U = u+R-\sqrt{R^2-\sum L_i^2}$$

WHERE
U = TRACK WIDTH ON CURVE, M.
u = TRACK WIDTH ON TANGENT, M. (u=2.59 M. FOR WB–19 AND u=2.44 M. FOR SU–12)
R = RADIUS OF CURVE OR TURN, M.
Li = WHEELBASE OF DESIGN VEHICLE BETWEEN CONSECUTION AXLES AND ARTICULATION POINTS, M.

$$F_A = \sqrt{R^2+A(2L+A)}-R$$

WHERE
A = FRONT OVERHANG OF INNER LANE VEHICLE, M. (A=1.22 M. FOR WB–19 AND A=1.22 M. FOR SU–12)
L = WHEELBASE OF SINGLE UNIT OR TRACTOR, M. (L=5.94 M. FOR WB–19 AND L=7.62 M. FOR SU–12)

$$Z = 0.1(V/\sqrt{R})$$

WHERE
V = DESIGN SPEED, KM./H.

NOTES :

EXHIBIT I ILLUSTRATES WB–19 AND SU–12 DESIGN VEHICLE.
EXHIBIT II ILLUSTRATES THE DIFFERENCE IN RELATIVE WIDTHS BETWEEN GROUP OF DESIGN VEHICLES.
EXHIBIT III ILLUSTRATES RELATIVE OVERHANG WIDTH VALUE FOR F .
EXHIBIT IV ILLUSTRATES THE COMPUTED VALUES FOR Z.

REFERENCE :

A POLICY ON GEOMETRIC DESIGN OF HIGHWAYS AND STREETS 2011, AASHTO.

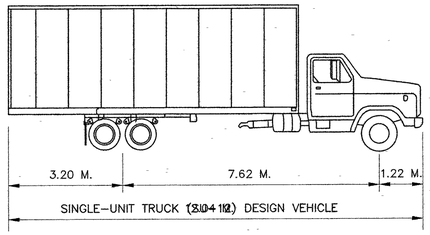

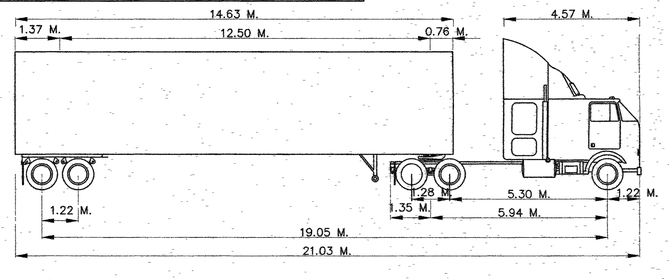

INTERMEDIATE SEMITRAILER (WB–19) DESIGN VEHICLE

EXHIBIT I : DESIGN VEHICLE (AASHTO)

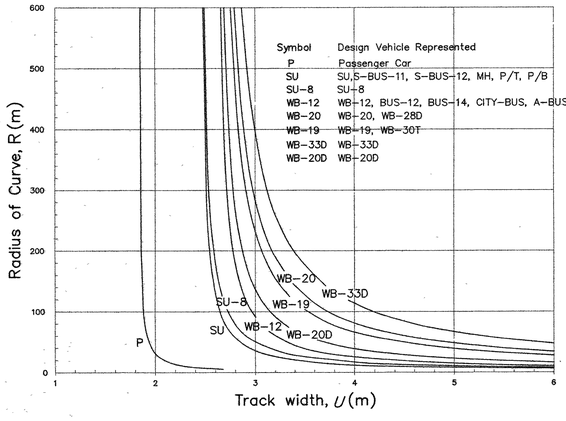

EXHIBIT II : TRACK WIDTH FOR WIDENING OF TRAVELLED WAY ON CURVES

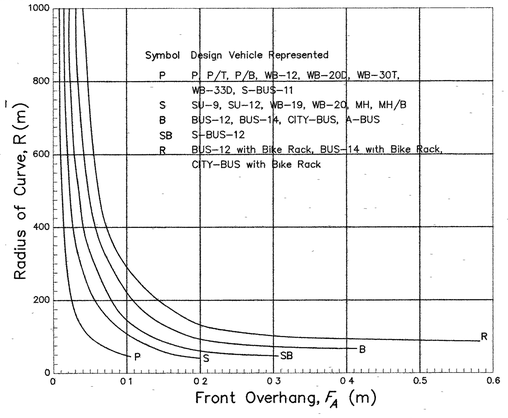

EXHIBIT III : FRONT OVERHANG FOR WIDENING OF TRAVELLED WAY ON CURVES

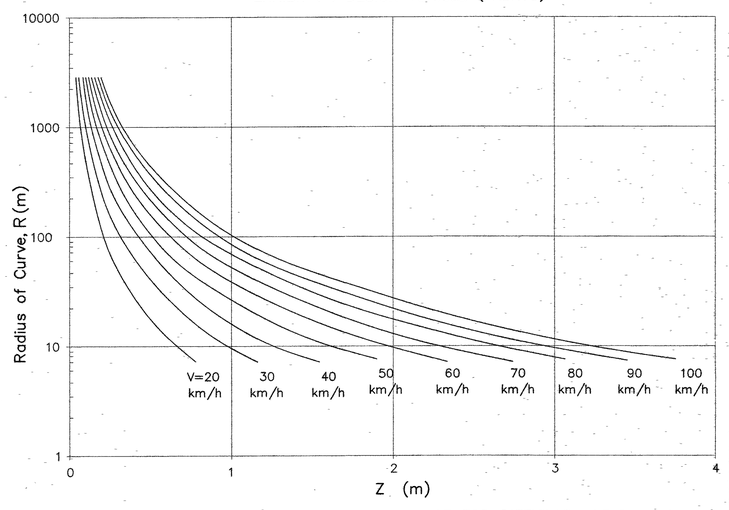

EXHIBIT IV : EXTRA WIDTH ALLOWANCE FOR DIFFICULTY OF DRIVING ON TRAVELLED WAY ON CURVES

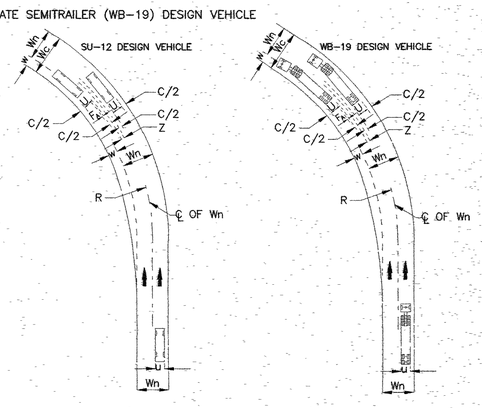

KINGDOM OF THAILAND

MINISTRY OF TRANSPORT
DEPARTMENT OF HIGHWAYS

STANDARD DRAWING
TRAVELLED WAY WIDENNING DETAILS
FOR WB–19 AND SU–12 DESIGN VEHICLE

DESIGNED : D.O.H. & CONSULTANTS	**CHECKED :** BUREAU OF LOCATION & DESIGN		**DATE :** OCT 2015
SUBMITTED : (DIRECTOR OF LOCATION & DESIGN BUREAU)			**SCALE :** AS SHOWN
APPROVED : (FOR DIRECTOR GENERAL)			**DWG NO.** GD–201
			SHEET NO. 27/RI

REF.	REVISION	SIGNATURE	DATE

G:\STD GD–201 REVISE\GD–201(REVISED)_REV2

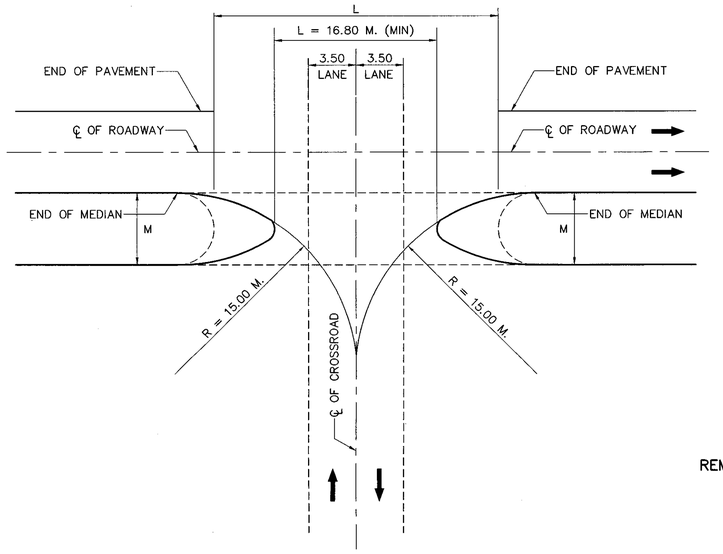

MINIMUM DESIGN OF MEDIAN OPENINGS
(SU DESIGN VEHICLE, CONTROL RADIUS OF 15.00 M.)

NOT TO SCALE

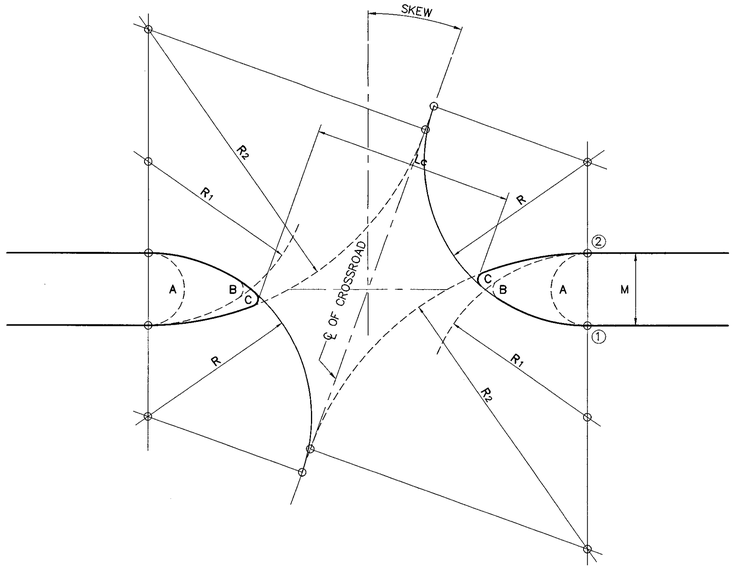

REMARK :

IN GENERAL, MEDIAN OPENINGS LONGER THAN 25.00 M. SHOULD BE AVOIDED, REGARDLESS OF SKEW THIS PLAN MAY CALL FOR SPECIAL CHANNELIZATION, RIGHT–TURN LANES, OR ADJUSTMENT TO REDUCE THE CROSSROAD SKEW, ALL OF WHICH RESULT IN ABOVE–MINIMUM DESIGNS.

MINIMUM DESIGN OF MEDIAN OPENINGS
(EFFECT OF SKEW)

NOT TO SCALE

NOTES :

1. MEDIAN OPENING SHOULD BE 3–5 KM. INTERVAL FOR RURAL AREAS WITH VILLAGE 1.5 KM. (MINIMUM) LONG IN THE INTERVAL.
2. MEDIAN OPENING IN URBAN AREAS SHOULD BE 250 M. (MINIMUM) INTERVAL (FOR THE LARGE CITY).

TABLE : MINIMUM DESIGN FOR MEDIAN OPENINGS
(SU DESIGN VEHICLE, CONTROL RADIUS OF 15.00 M.)

WIDTH OF MEDIAN, M (m.)	MINIMUM LENGTH OF MEDIAN OPENING, L (m.)	
	SEMICIRCULAR	BULLET NOSE
1.20	28.80	28.80
1.80	28.20	22.80
2.40	27.60	20.40
3.00	27.00	18.60
3.60	26.40	17.40
4.20	25.80	16.80
4.80	25.20	16.80
6.00	24.00	16.80
7.20	22.80	16.80
8.40	21.60	16.80
9.60	20.40	16.80
10.80	19.20	16.80
12.00	18.00	16.80

REMARKS :

1. FOR A MEDIAN WIDTH OF 3.00 M. OR MORE THE BULLET NOSE IS SUPERIOR TO THE SEMICIRCULAR END AND PREFERABLY SHOULD BE USED IN DESIGN.
2. FOR ANY THREE–OR–FOUR–LEG INTERSECTION ON A DIVIDED HIGHWAY THE LENGTH OF MEDIAN OPENING SHOULD BE AS GREAT AS THE WIDTH OF CROSSROAD ROADWAY PAVEMENT PLUS SHOULDER AND IN NO CASE LESS THAN 16.80 M. (OR LESS THAN THE CROSSROAD PAVEMENT PLUS 2.40 M.) WHERE THE CROSSROAD IS A DIVIDED HIGHWAY, THE LENGTH OF OPENING SHOULD BE AT LEAST EQUAL TO THE WIDTH OF THE CROSSROAD ROADWAYS PLUS THAT OF THE MEDIAN PLUS 2.40 M.
3. THE USED OF A 16.80 M. MINIMUM LENGTH OF OPENING WITHOUT REGARD TO THE WIDTH OF MEDIAN OR THE CONTROL RADIUS SHOULD NOT BE CONSIDERED EXCEPT AT VERY MINOR CROSSROADS. THE MINIMUM LENGTH OF OPENING FOR U–TURNS, AS DISCUSSED ELSEWHERE.

TABLE : EFFECT OF SKEW ON MINIMUM DESIGN FOR MEDIAN OPENINGS
(TYPICAL VALUES BASED ON CONTROL RADIUS OF 15.00 M.)

SKEW ANGLE (DEGREES)	WIDTH OF MEDIAN (M.)	LENGTH OF MEDIAN OPENING MEASURED NORMAL TO THE CROSSROAD (M.)			R FOR DESIGN C (M.)
		SEMICIRCULAR A	BULLET NOSE		
			SYMMETRICAL B	ASYMMETRICAL C	
0	3.00	27.00	19.00	–	–
	6.00	24.00	13.00	–	–
	9.00	21.00	16.80 MIN	–	–
	12.00	18.00	16.80 MIN	–	–
10	3.00	32.00	24.00	23.00	21.00
	6.00	28.00	17.00	16.80 MIN	20.00
	9.00	25.00	16.80 MIN	16.80 MIN	20.00
	12.00	21.00	16.80 MIN	16.80 MIN	19.00
	15.00	18.00	–	–	–
20	3.00	39.00	30.00	–	29.00
	6.00	35.00	24.00	20.00	28.00
	9.00	31.00	19.00	14.00	26.00
	12.00	26.00	17.00	12.00 MIN	25.00
	15.00	23.00	17.00	12.00 MIN	23.00
	18.00	18.00	–	–	–
30	3.00	48.00	40.00	32.00	42.00
	6.00	43.00	32.00	23.00	39.00
	9.00	38.00	26.00	17.00	36.00
	12.00	34.00	22.00	13.00	33.00
	15.00	27.00	18.00	12.00 MIN	30.00
	18.00	24.00	15.00 MIN	12.00 MIN	27.00
40	3.00	60.00	52.00	35.00	63.00
	6.00	55.00	43.00	27.00	58.00
	9.00	49.00	37.00	20.00	53.00
	12.00	43.00	30.00	15.00	47.00
	15.00	37.00	26.00	12.00 MIN	42.00
	18.00	32.00	23.00	12.00 MIN	36.00

NOTES : A, B, AND C IN THE HEADINGS OF THIS TABLE REFER TO THE TYPES OF MEDIAN ENDS DISCUSSED IN THE ACCOMPANYING TEXT.

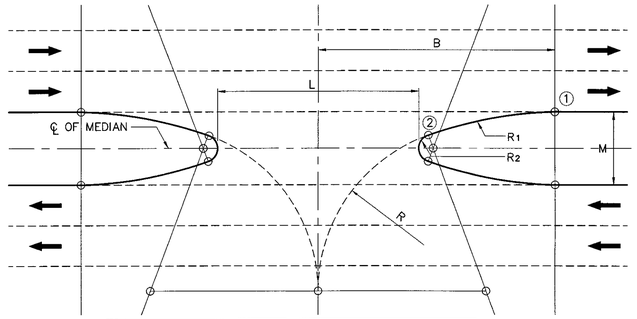

WIDTH OF MEDIAN, M (M.)	DIMENSIONS IN METERS WHEN					
	R_1=30.00 M.		R_1=50.00 M.		R_1=70.00 M.	
	L	B	L	B	L	B
6.00	18.00	20.20	20.20	24.40	21.30	27.60
9.00	15.10	21.40	17.70	26.50	19.00	30.40
12.00	12.80	22.40	15.60	28.30	17.10	32.70
15.00	–	–	13.80	29.90	15.40	34.70
18.00	–	–	–	–	13.80	36.70
21.00	–	–	–	–	12.40	38.40

ABOVE–MINIMUM DESIGN OF MEDIAN OPENINGS
(TYPICAL BULLET NOSE ENDS)

NOT TO SCALE

REMARKS :

1. RADIUS R1 MAY VARY FROM ABOUT 25.00–120.00 M.OR MORE THE TABULATED VALUES SHOWN, 30.00 M., 50.00 M. AND 70.00 M. ARE ESTABLISHED MINIMUM RADII FOR TURNING SPEEDS OF 30, 40, AND 50 KPH. RESPECTIVELY.
2. TO AVOID A LARGE OPENING, R SHOULD BE HELD TO A REASONABLE MINIMUM, EG, 15.00 M, AS USED IN FIGURE.
3. THE LENGTH OF MEDIAN OPENING IS GOVERNED BY THE RADII. FOR MEDIANS WIDER THAN ABOUT 9.00 M. COUPLED WITH A CROSSROAD OF FOUR OR MORE LANES, THE CONTROL RADIUS R GENERALLY WILL NEED TO BE GREATER THAN 15.00 M. OR THE MEDIAN OPENING WILL BE TOO SHORT.

REMARK :

THE LENGTH OF THESE LANES IN RURAL AREAS IS GENERALLY BASED ON DECELERATION CONSIDERATIONS. HOWEVER, IN URBAN AREAS WHERE TRAFFIC SPEEDS ARE SIGNIFICANTLY LOWER AND RIGHT–OF–WAY MORE RESTRICTIVE, THE LENGTH MAY BE DICTATED MORE BY VEHICLE STORAGE REQUIREMENTS, PARTICULARLY AT TRAFFIC SIGNAL CONTROLLED INTERSECTIONS AT LOCATIONS WHERE A FULL LENGTH DECELERATION LANE CANNOT BE PROVIDED, A MINIMUM TREATMENT (EG. 30.00 M. TAPER PLUS 30.00 M. PARALLEL LANE) CAN STILL PROVIDE SIGNIFICANT BENEFITS. THE TOTAL LENGTH REQUIRED FOR DECELERATION LANES IS GIVEN IN TABLE. THIS LENGTH IS PROVIDED BY MEANS OF A TAPER AND A PARALLEL LANE THE LENGTH OF TAPER ADOPTED IS TYPICALLY 50.00 M. RURAL, 30.00 M. URBAN, OR LESS THE LENGTH OF DECELERATION LANE ON GRADE IS DETERMINED BY MULTIPLYING THE LENGTH WITH CORRECTION FACTOR FOR GRADE.

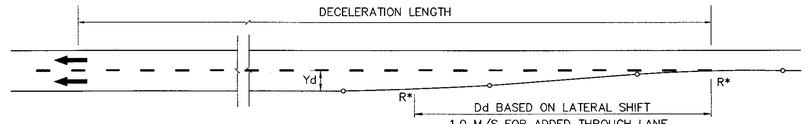

R* = EDGE OF PAVEMENT ROUNDING
(100 FOR DECEL. LANE
250 FOR ADDED THROUGH LANE)

Dd = 50 MAX. – RURAL
30 MAX. – URBAN
} FOR DECEL. LANE

$$Dd = \frac{V\ Yd}{3.6\ S}$$

WHERE
S = RATE OF LATERAL MOVEMENT (M./SEC.)
V = DESIGN (OR 85 PERCENTILE OPERATING) SPEED (KM./H.)
Yd = LATERAL MOVEMENT (M.) OF VEHICLE (OR ADDED ROAD WIDTH)

DIVERGE TAPERS

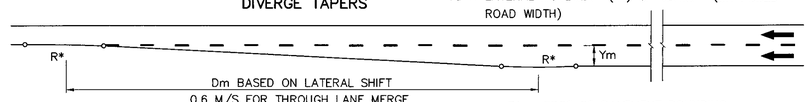

R* = EDGE OF PAVEMENT ROUNDING
(200 TO 400 M.)

$$Dm = \frac{V\ Ym}{3.6\ S}$$

WHERE
Dm = MINIMUM LENGTH (M.) OF TAPER
S = RATE OF LATERAL MOVEMENT (M./ SEC.)
V = DESIGN (OR 85 PERCENTILE OPERATING) SPEED (KM./H)
Ym = LATERAL MOVEMENT (M.) OF VEHICLE, OR WIDTH REDUCTION

MERGE TAPERS

AUXILIARY STORAGE LANE TAPERS

NOT TO SCALE

TABLE : LENGTH OF DECELERATION LANES

DESIGN SPEED OF APPROACH ROAD (KM./H)	LENGTH OF DECELERATION LANE (M.) * (INCLUDING LENGTH OF TAPERED APPROACH) WHERE DESIGN SPEED OF EXIT CURVE (KM.H) IS :							
	0 !	20	30	40	50	60	70	80
50	75	70	60	45	–	–	–	–
60	95	90	80	65	55	–	–	–
70	110	105	95	85	70	55	–	–
80	130	125	115	100	90	80	55	–
90	145	140	135	120	110	100	75	60
100	170	165	155	145	135	120	100	85
110	180	180	170	160	150	140	120	105
120	200	195	185	175	170	155	140	120

* LENGTH FOR LEVEL GRADE (SEE TABLE : CORRECTION FOR GRADE
! LENGT REQUIRED WHERE A VEHICLE DECELERATES TO A STOP CONDITION

TABLE : CORRECTION FOR GRADE

GRADE	RATIO OF LENGTH ON GRADE TO LENGTH OF LEVEL	
	UPGRADE	DOWNGRADE
0–2 %	1.0	1.0
3–4 %	0.9	1.2
5–6 %	0.8	1.35

REF.	REVISION	SIGNATURE	DATE

KINGDOM OF THAILAND
MINISTRY OF TRANSPORT
DEPARTMENT OF HIGHWAYS

STANDARD DRAWING

MEDIAN OPENING

DESIGNED : D.O.H. & CONSULTANTS	CHECKED : BUREAU OF LOCATION & DESIGN	DATE : OCT 2015
SUBMITTED : (DIRECTOR OF LOCATION & DESIGN BUREAU)		SCALE : AS SHOWN
APPROVED : (FOR DIRECTOR GENERAL)		DWG NO. GD–301
		SHEET NO. 28

D:\std dwg 2015\GD-301(REV00)

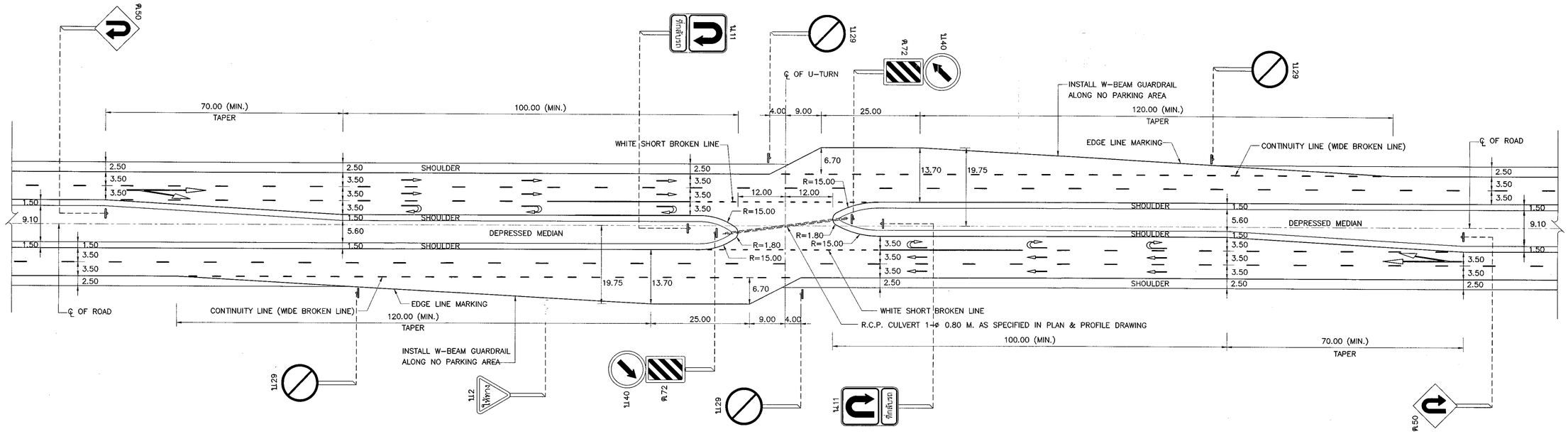

FIGURE 1 : U–TURN GUIDELINE FOR DEPRESSED MEDIAN
NOT TO SCALE

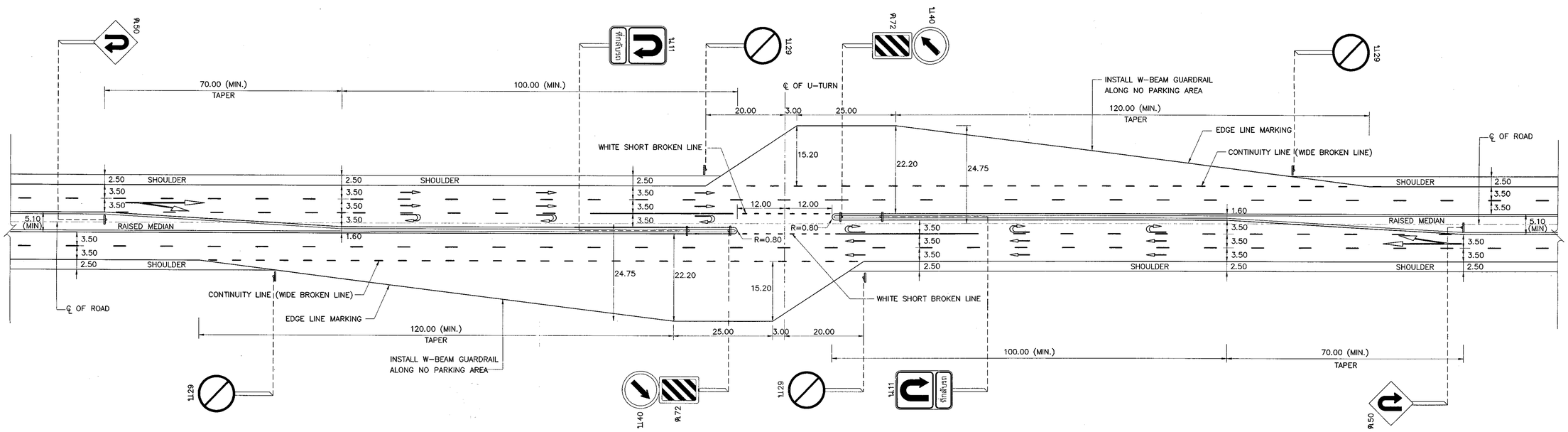

FIGURE 2 : U–TURN GUIDELINE FOR RAISED MEDIAN
NOT TO SCALE

NOTES :

1. ALL DIMENSIONS ARE IN METERS UNLESS OTHERWISE INDICATED.
2. U–TURN FIGURE 1 AND 2 ARE DESIGNED FOR TRUCK SU–9 (AASHTO).
3. THIS DRAWING IS ONLY GUIDANCE DESIGN UNDER THE CONDITION AS SHOWN WHICH CONSIST OF TRUCK TYPE, MEDIAN WIDTH AND RIGHT OF WAY WIDTH. THESE ENGINEER SHALL CONSIDER AND DESIGN CASE BY CASE.

REF.	REVISION	SIGNATURE	DATE

KINGDOM OF THAILAND

MINISTRY OF TRANSPORT
DEPARTMENT OF HIGHWAYS

STANDARD DRAWING
U–TURN GUIDELINE
FOR DEPRESSED & RAISED MEDIAN

DESIGNED : D.O.H. & CONSULTANTS	CHECKED : BUREAU OF LOCATION & DESIGN	DATE : OCT 2015
SUBMITTED : (DIRECTOR OF LOCATION & DESIGN BUREAU)		SCALE : AS SHOWN
APPROVED : (FOR DIRECTOR GENERAL)		DWG NO. GD–401
		SHEET NO. 29

D:\std dwg 2015\GD-401(REV00)

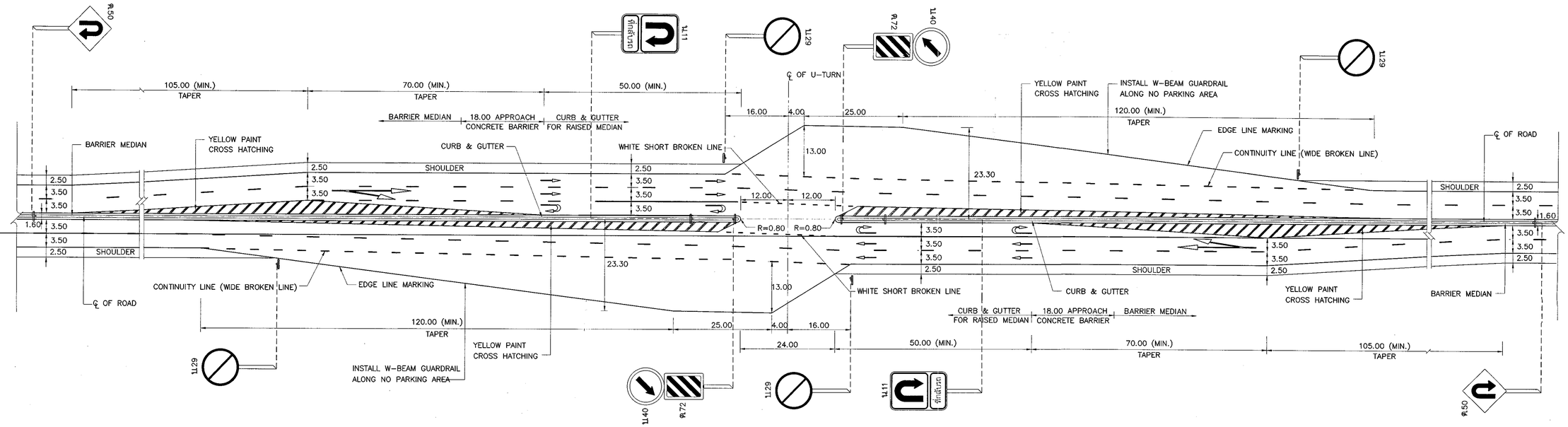

FIGURE 3 : U-TURN GUIDELINE FOR BARRIER MEDIAN
NOT TO SCALE

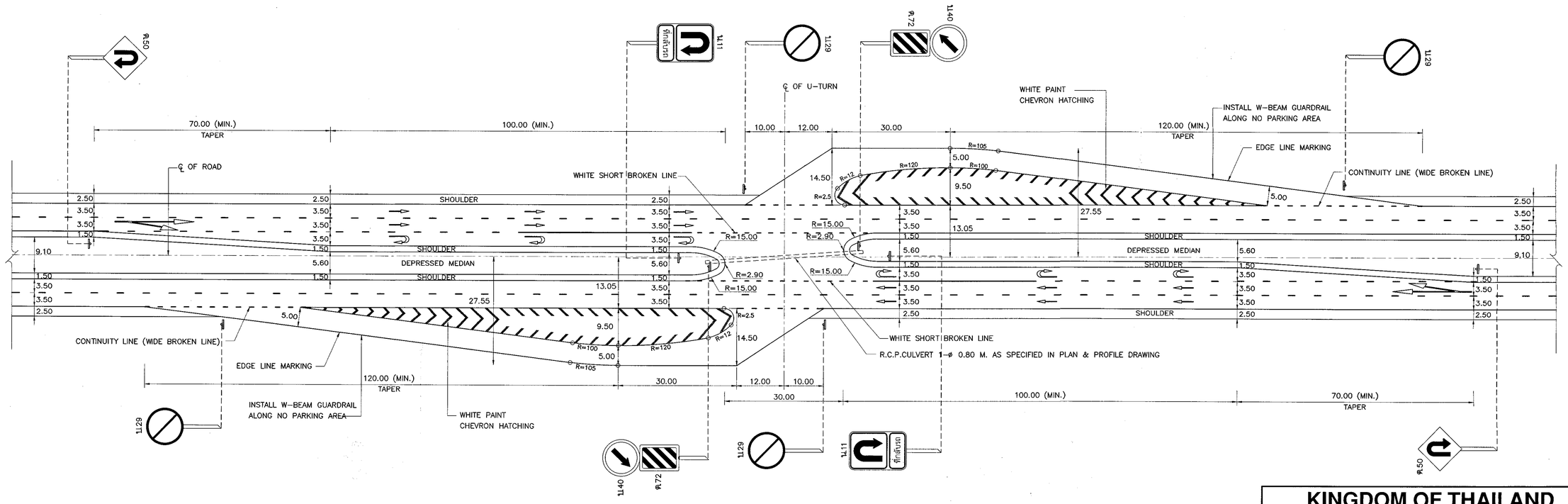

FIGURE 4 : U-TURN GUIDELINE FOR SPECIAL U-TURN
NOT TO SCALE

NOTES :

1. ALL DIMENSIONS ARE IN METERS UNLESS OTHERWISE INDICATED.
2. U-TURN FIGURE 3 IS DESIGNED FOR TRUCK SU-9 (AASHTO).
3. U-TURN FIGURE 4 IS DESIGNED FOR TRUCK SU-12 AND WB-19 (AASHTO).
4. TRUCK SU-12 (AASHTO) SIZE IS EQUIVALENT TO THAI TRUCK SIZE, WHICH IS ANNOUNCED IN MINISTERIAL REGULATIONS ISSUE 60 (B.E.2552) FOLLOW AN ACT OF LAND TRANSPORTATION LEGISLATION.
5. THIS DRAWING IS ONLY GUIDANCE DESIGN UNDER THE CONDITION AS SHOWN WHICH CONSIST OF TRUCK TYPE, MEDIAN WIDTH AND RIGHT OF WAY WIDTH. THESE ENGINEER SHALL CONSIDER AND DESIGN CASE BY CASE.

REF.	REVISION	SIGNATURE	DATE

KINGDOM OF THAILAND

MINISTRY OF TRANSPORT

DEPARTMENT OF HIGHWAYS

STANDARD DRAWING

U-TURN GUIDELINE
FOR BARRIER MEDIAN & SPECIAL U-TURN

DESIGNED : D.O.H. & CONSULTANTS	CHECKED : BUREAU OF LOCATION & DESIGN	DATE : OCT 2015
SUBMITTED : (DIRECTOR OF LOCATION & DESIGN BUREAU)		SCALE : AS SHOWN
APPROVED : (FOR DIRECTOR GENERAL)		DWG NO. GD-402
		SHEET NO. 30

D:\std dwg 2015\GD-402(REV00)

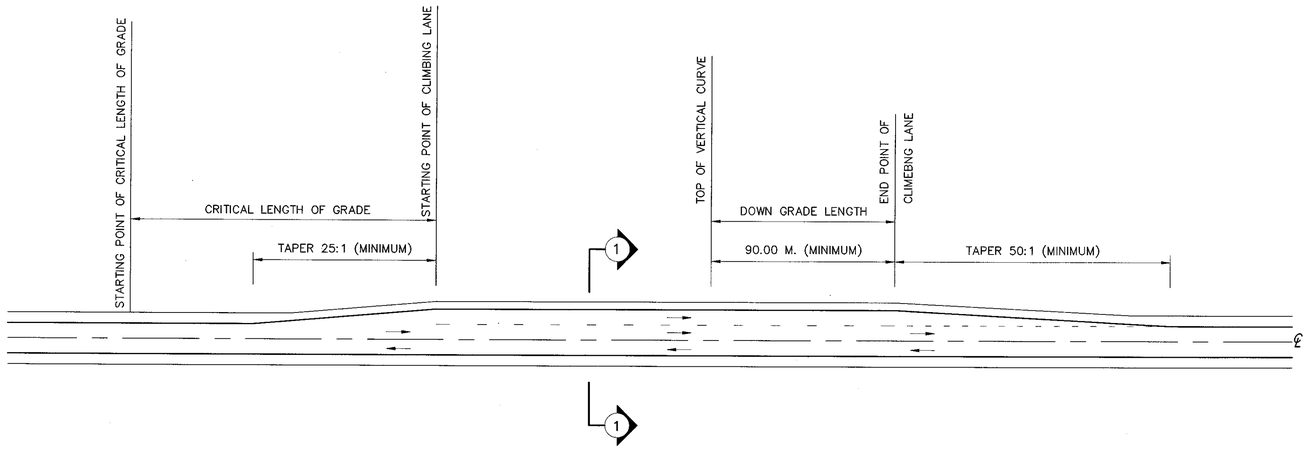

FIGURE 1 CLIMBING LANE PLAN FOR 2–LANE HIGHWAYS (ONLY ON UPGRADE DIRECTION)

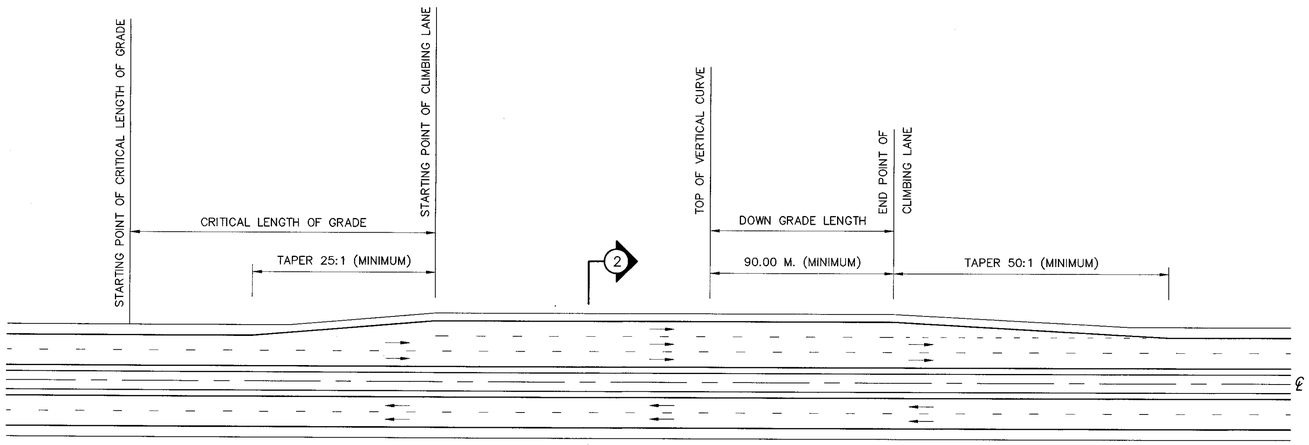

FIGURE 2 CLIMBING LANE PLAN FOR MULTILANE HIGHWAYS (ONLY ON UPGRADE DIRECTION)

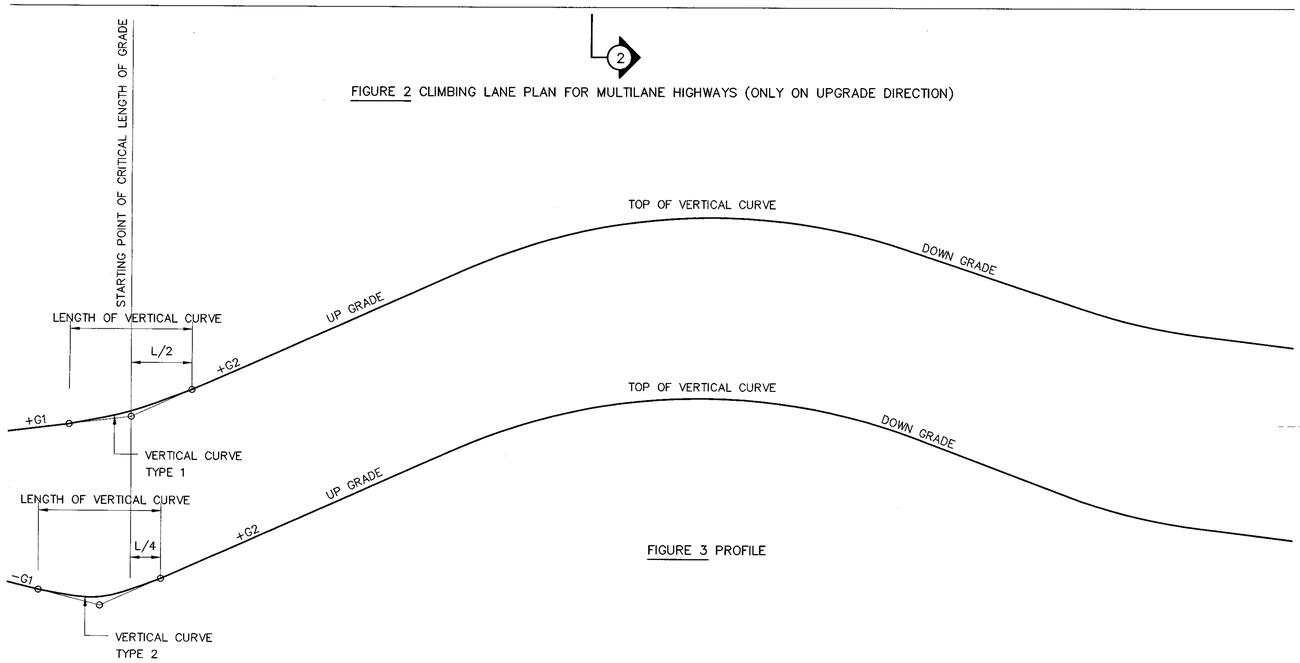

FIGURE 3 PROFILE

CLIMBING LANE FOR 2–LANE HIGHWAYS

1. CONDITION AND CRITERIA

   THE FOLLOWING THREE CONDITIONS AND CRITERIA, REFLECTING ECONOMIC CONSIDERATION, SHOULD BE SATISFIED TO JUSTIFY A CLIMBING LANE :

   1.1 UPGRADE TRAFFIC FLOW RATE IN EXCESS OF 200 VEHICLES PER HOUR.

   1.2 UPGRADE TRUCK FLOW RATE IN EXCESS OF 20 VEHICLES PER HOUR.

   1.3 ONE OF THE FOLLOWING CONDITIONS EXISTS ON UPGRADE (CRITICAL LENGTH OF GRADE)

   – A 15 KPH. SPEED REDUCTION IS EXPECTED FOR A TYPICAL HEAVY TRUCK ON MAJOR ARTERIAL HIGHWAY OR MOTORWAY AND SPEED REDUCTION > 15 KPH. – 40 KPH. IS EXPECTED FOR A TYPICAL HEAVY TRUCK ON OTHER HIGHWAYS AS DIRECTED BY THE ENGINEER.

   – LEVEL OF SERVICE OF TRAFFIC FLOW DROPS TO LEVEL E OR F.

2. THESE GENERAL GUIDES FOR THE CONSIDERATION OF CLIMBING LANES ON GRADES WOULD APPLY ONLY TO CLIMBING LANES ON TWO–LANE HIGHWAYS AND SHOULD NOT BE USED IN CONJUNCTION WITH CONSIDERATION OF CLIMBING LANES ON MULTILANE HIGHWAYS.
3. THE CRITICAL LENGTH OF GRADE IN FIGURE IS DERIVED AS THE LENGTH OF TANGENT GRADE. WHERE A VERTICAL IS PART OF A CRITICAL LENGTH OF GRADE, AN APPROXIMATE EQUIVALENT TANGENT GRADE LENGTH MUST BE USED. WHERE THE CONDITION INVOLVES VERTICAL CURVE TYPE I AND THE ALGEBRAIC DIFFERENCE IN GRADES IS NOT TOO GREAT. THE MEASUREMENT OF CRITICAL LENGTH OF GRADE MAY BE MADE BETWEEN THE POINT OF VERTICAL INTERSECTION (PVI.). WHERE VERTICAL CURVE OF TYPE II IS INVOLVED. PARTICULARLY WHERE THE ALGEBRAIC DIFFERENCE IN GRADE IS APPRECIABLE. ABOUT ONE–QUARTER OF THE VERTICAL CURVE LENGTH MAY BE CONSIDERED AS PART OF THE GRADE UNDER CONSIDERATION.
4. THE BEGINNING POINT OF CLIMBING LANE IS THE POINT WHERE THE CONDITION OF TRAFFIC OPERATION EXISTS AS STATED IN 1.3.
5. THE END POINT OF CLIMBING LANE IS THE POINT WHERE THE TRUCK CAN RETURN TO THE NORMAL LANE WITHOUT UNDUE HAZARD IN PARTICULAR. WHERE THE SIGHT DISTANCE BECOMES SUFFICIENT TO PERMIT PASSING WITH SAFETY WHEN THERE IS NO ONCOMING TRAFFIC OR ,PREFERABLY, AT LEAST 90.00 M. BEYOND THE CREST POINT (EXCLUDING TAPER LENGTH OF LANE DROPS).
6. CLIMBING LANE WIDTH SHALL BE THE SAME WITH THE MAIN TRAFFIC LANE AND THE SHOULDER WIDTH SHALL BE VARIED (1.00 M. MIN.) IF THE TOPOGRAPHY IS RESTRICTED.
7. DIMENSION ARE IN METERS UNLESS OTHERWISE INDICATED.

CLIMBING LANE FOR MULTILANE HIGHWAYS

1. CONDITION AND CRITERIA

   1.1 IF THE CRITICAL LENGTH OF GRADE, THE LENGTH OF A PARTICULAR UPGRADE WHICH REDUCES THE OPERATING SPEED OF TRUCKS 15 KPH. BELOW THE OPERATING SPEED OF THE REMAINING TRAFFIC IS LESS THAN THE LENGTH OF GRADE BEING STUDIED, A CLIMBING LANE IS WARRANTED.

   1.2 IF THE FLOW RATE ON THE GRADE EXCEEDS THE SERVICE FLOW RATE OF THE NEXT POORER LEVEL OF SERVICE, A CLIMBING LANE IS WARRANTED.

   1.3 IF THE UPGRADE DIRECTIONAL TRAFFIC VOLUME IS EQUAL TO OR GREATER THAN THE SERVICE VOLUME FOR LEVEL OF SERVICE D , A CLIMBING LANE IS WARRANTED.

2. IN MOST CASES WHEN THE SERVICE VOLUME, INCLUDING TRUCK, IS GREATER THAN 1,700 VPH. AND THE LENGTH OF THE GRADE AND THE PERCENTAGE OF TRUCKS ARE SUFFICIENT TO CONSIDER CLIMBING LANES, THE VOLUME IN TERMS OF EQUIVALENT PASSENGER CARS IS LIKELY TO APPROACH OF EVEN EXCEED THE CAPACITY. AN INCREASE IN THE NUMBER OF LANES THROUGHOUT THE HIGHWAY SECTION WOULD REPRESENT A BETTER INVESTMENT THAN THE PROVISION OF CLIMBING LANES.
3. A CLIMBING LANE IS ALSO GENERALLY NOT WARRANTED ON FOUR–LANE HIGHWAYS FOR A DIRECTION SERVICE VOLUME BELOW 1,000 VPH. REGARDLESS OF THE PERCENTAGE OF TRUCK.
4. WHEN THE ANALYSIS INDICATES THAT A CLIMBING LANE MAY IMPROVE OPERATIONS OR MAINTAIN THE LEVEL OF SERVICE ON THE SECTION WITH A GRADE ; FURTHERMORE, AN ADDITIONAL CHECK MUST BE MADE TO DETERMINE IF THE NUMBER OF LANES REQUIRED ON THE GRADE ARE SUFFICIENT EVEN WITH A CLIMBING LANE.
5. THE PRINCIPLES FOR CROSS SLOPES, FOR LOCATING TERMINAL POINTS, AND FOR DESIGNING TERMINAL AREAS OR TAPERS FOR CLIMBING LANES ON TWO–LANE HIGHWAYS ARE EQUALLY APPLICABLE TO CLIMBING LANES ON MULTILANE FACILITIES. THE PRIME FACTOR BEING THAT OF DETERMINING THE LOCATION OF THE UPHILL TERMINUS OF THE CLIMBING LANE AT THE POINT WHERE A SATISFACTORY SPEED IS ATTAINED BY HEAVY TRUCKS, PREFERABLY ABOUT 15 KPH. BELOW THE OPERATING SPEED OF THE HIGHWAY. THE PASSING SIGHT DISTANCE NEED NOT BE CONSIDERED.

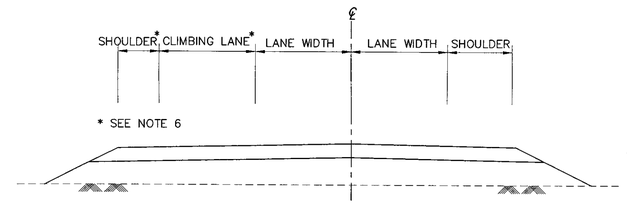

FIGURE 4 SECTION 1–1

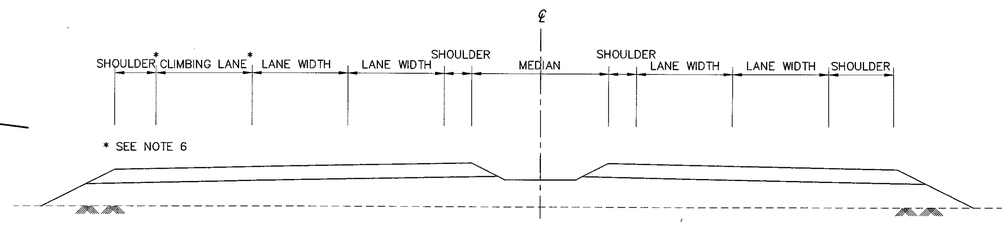

FIGURE 5 SECTION 2–2

KINGDOM OF THAILAND

MINISTRY OF TRANSPORT
DEPARTMENT OF HIGHWAYS

STANDARD DRAWING

CLIMBING LANE
TWO–LANE AND MULTILANE HIGHWAYS

DESIGNED : D.O.H. & CONSULTANTS	**CHECKED :** BUREAU OF LOCATION & DESIGN	**DATE :** OCT 2015
SUBMITTED : (DIRECTOR OF LOCATION & DESIGN BUREAU)		**SCALE :** AS SHOWN
APPROVED : (FOR DIRECTOR GENERAL)		**DWG NO.** GD–501
		SHEET NO. 31

REF.	REVISION	SIGNATURE	DATE

D:\std dwg 2015\GD-501(REV00)

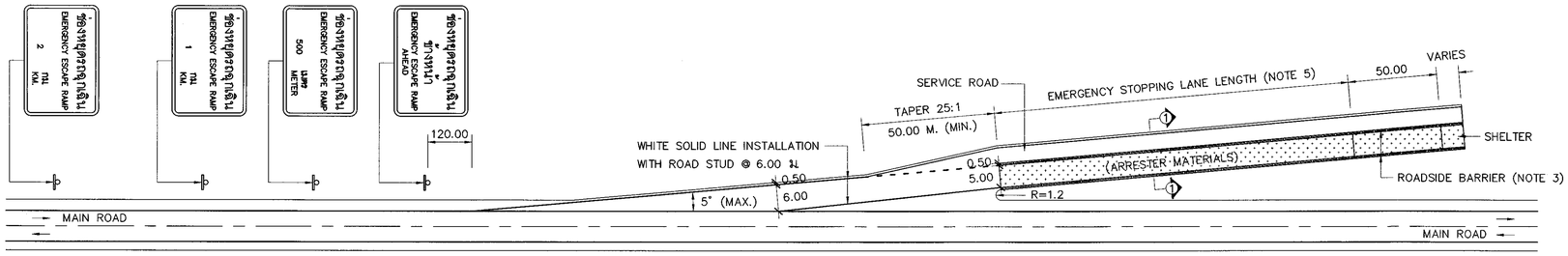

FIGURE 1 EMERGENCY STOPPING LANE PLAN

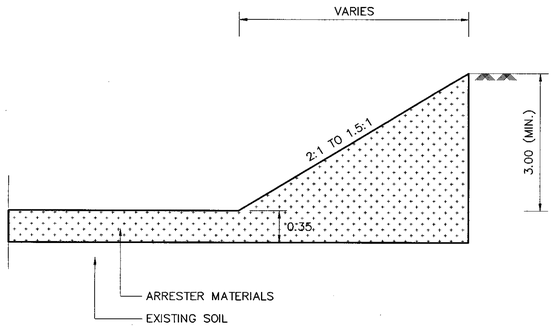

FIGURE 3 SHELTER DETAIL

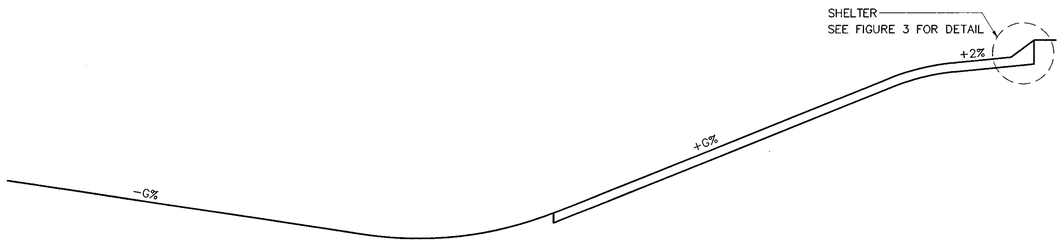

FIGURE 2 ELEVATION

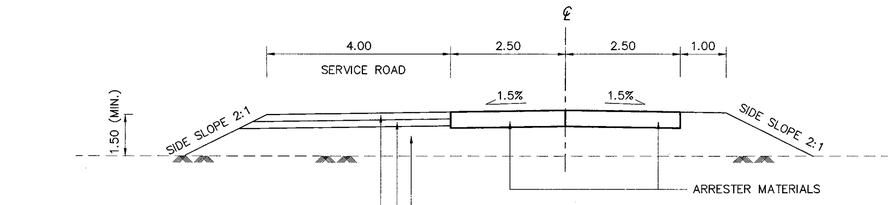

FIGURE 4 SECTION 1–1 (WITH OUT BARRIER)

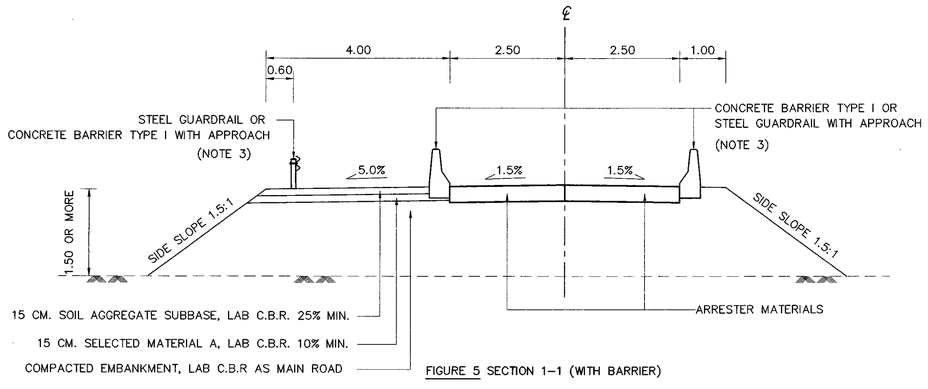

FIGURE 5 SECTION 1–1 (WITH BARRIER)

NOTE

1. DIMENSIONS ARE IN METER UNLESS OTHERWISE INDICATED
2. ARRESTER MATERIALS PROPERTY AS FOLLOW:
   - 2.1 ROCK, GRAVEL OR SAND THE MATERIALS USED SHALL BE THE UNIFORM GRADE IN ORDER TO PROTECT COMPRESSION AND ABSORB WATER
   - 2.2 IT SHALL BE CLEAN AND NON ORGANICS MIXED
   - 2.3 ARRESTER MATERIAL SIZE SHALL BE FOLLOWED TABLE 1.

TABLE 1 SHOW PROPER GRADATION FOR ARRESTER MATERIALS

SIEVE SIZE	PERCENTAGE THROUGH SIEVE
1 1/2"	100
1"	95 – 100
3/4"	–
1/2"	25 – 60
3/8"	–
NO.4	0 – 10
NO.8	0 – 5

TABLE CITED IN AASHTO, 2011

3. BARRIER IS A TOOL WHICH IS USED FOR PROTECTING A CAR THAT LOSE BALANCE GET AWAY FROM EMERGENCY STOPPING LANE. IT SHALL BE INSTALLED OR NOT BE INSTALLED DEPENDING ON AUTHORIZE ENGINEER TO BE CONSIDER TYPE AND INSTALLATION METHOD AS FOLLOW SUITABILITY.
   - 3.1 IF STEEL GUARDRAIL IS APPLIED, REFLECTOR SHALL BE INSTALLED EVERY 10 METERS
   - 3.2 IF CONCRETE BARRIER TYPE 1 IS APPLIED, MARKING SHALL BE ALSO APPLIED
   - 3.3 IF BARRIER OR GUARDRAIL ARE APPLIED, BARRIER INSTALLATION SHALL BE REFERED TO STANDARD DRAWING AS REGARDS BARRIER INSTALLATION IN APPROACH SECTION
4. DRAINAGE SYSTEM SHALL BE DESIGNED FOLLOWING GENERAL TRAFFIC LANE AND INSTALLED GEOTEXTILE BETWEEN ARRESTER MATERIALS AND SUBBASE
5. THE LENGTH VALUE OF EMERGENCY STOPPING LANE IS SHOWN BY PERCENTAGE OF UP GRADE AND ARRESTER MATERIALS TYPE (UNIT: METER) OR CALCULATE AS SHOWN IN STANDARD DRAWING MANUAL

PERCENTAGE OF UP GRADE	ARRESTER MATERIALS TYPE		
(+G%)	ROCK	GRAVEL	SAND
5%	775	515	390
6%	705	485	370
7%	645	455	355
8%	595	430	340
9%	555	410	325
10%	515	390	310
11%	485	370	300
12%	455	355	290
13%	430	340	280
14%	410	325	270
15%	390	310	260

THIS TABLE IS USED FOR A CAR WITH 140 KM/H SPEED BEFORE GETTING IN EMERGENCY STOPPING LANE
THE TABLE CITED IN AASHTO, 2011

6. EMERGENCY STOPPING LANE SHALL NOT BE APPLIED ON CURVE AREA
7. IF SHELTER CANNOT BE APPLIED, CRASH CUSHION SHALL BE APPLIED INSTEAD
8. OTHER TYPE OF EMERGENCY STOPPING LANE PROVIDED IN STANDARD DRAWING MANUAL

REF.	REVISION	SIGNATURE	DATE

KINGDOM OF THAILAND

MINISTRY OF TRANSPORT
DEPARTMENT OF HIGHWAYS

STANDARD DRAWING

EMERGENCY ESCAPE RAMP

DESIGNED : D.O.H. & CONSULTANTS	**CHECKED :** BUREAU OF LOCATION & DESIGN	**DATE :** OCT 2015
SUBMITTED : (DIRECTOR OF LOCATION & DESIGN BUREAU)		**SCALE :** AS SHOWN
APPROVED : (FOR DIRECTOR GENERAL)		**DWG NO.** GD–502
		SHEET NO. 32

D:\std dwg 2015\GD-502(REV00)

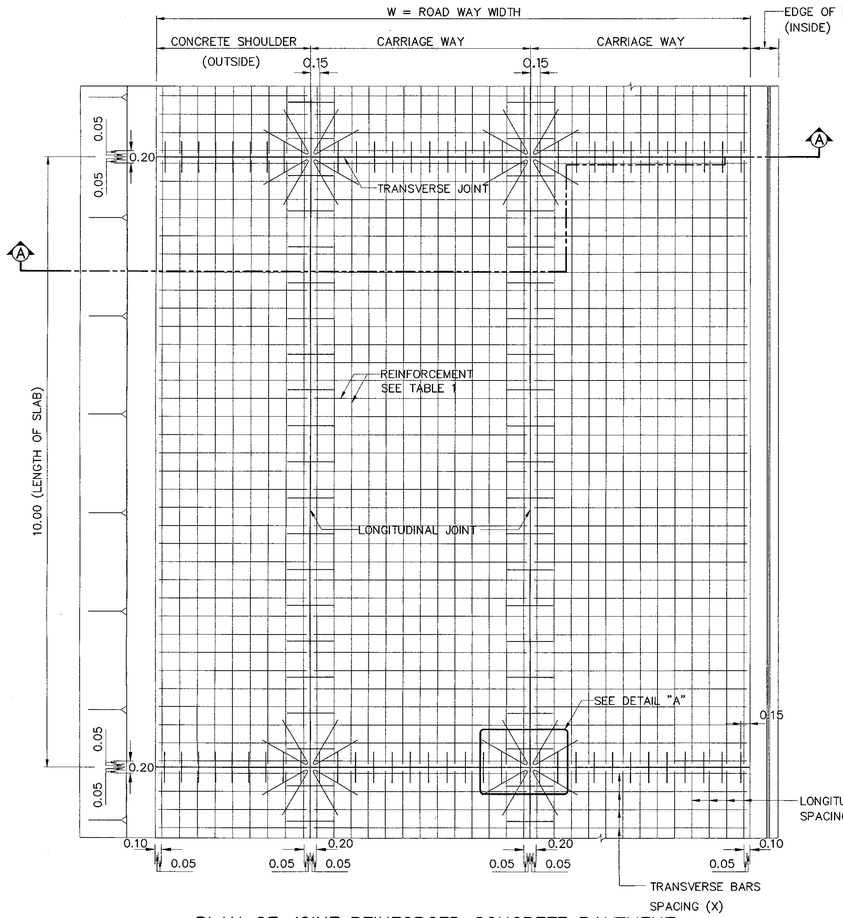

PLAN OF JOINT REINFORCED CONCRETE PAVEMENT

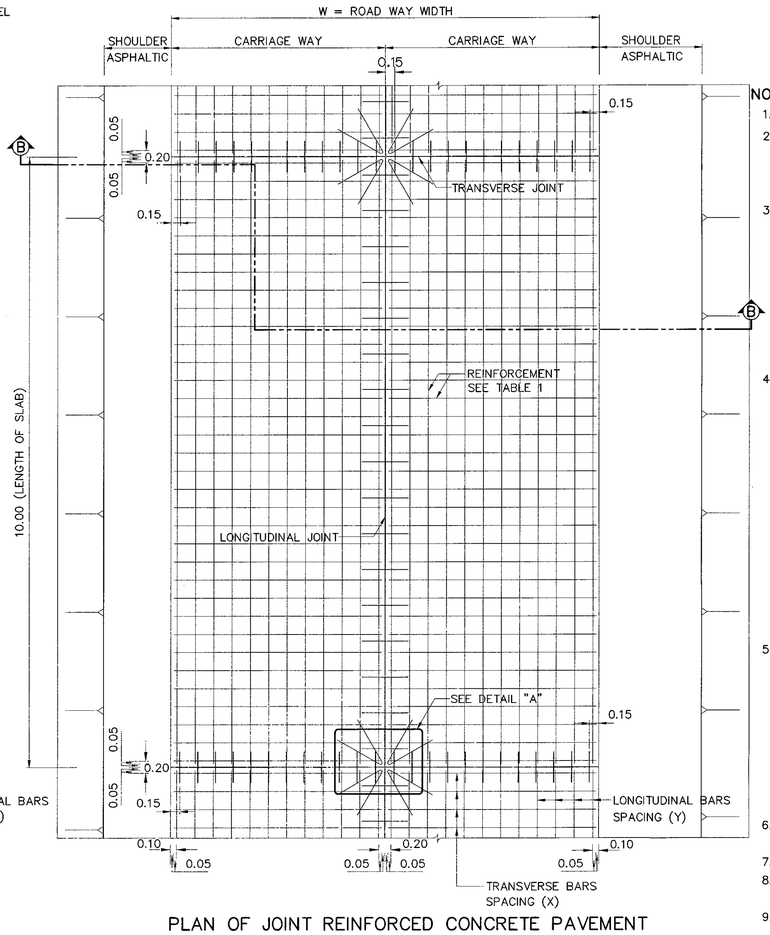

PLAN OF JOINT REINFORCED CONCRETE PAVEMENT

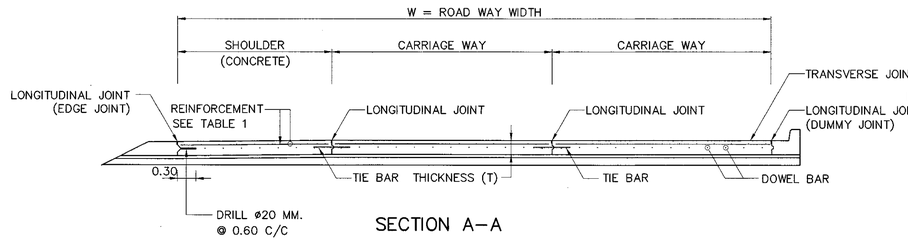

SECTION A–A

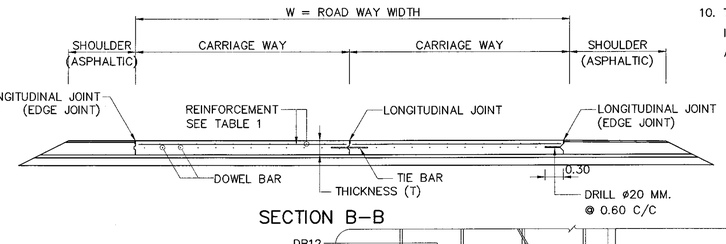

SECTION B–B

PLAN AND SECTION JOINT REINFORCED CONCRETE PAVEMENT (JRCP)

SCALE 1 : 50

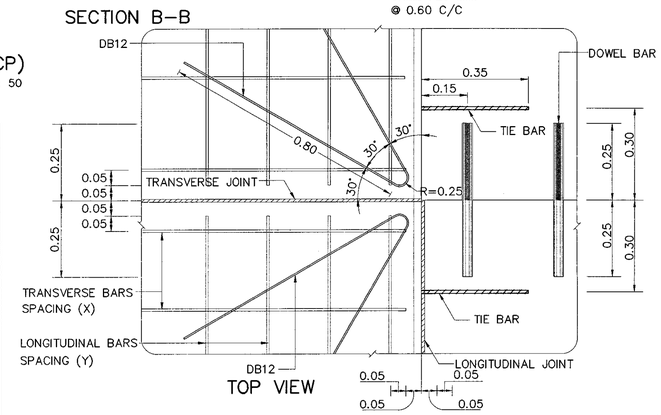

TOP VIEW

PLAN OF REINFORCEMENT AT T–0.05 PLAN OF REINFORCEMENT AT T/2

DETAIL "A"

SCALE 1 : 10

TABLE 1 REINFORCEMENT FOR JOINT REINFORCED CONCRETE PAVEMENT (DISTRIBUTION STEEL) (f_d = 2.2)

SLAB THICKNESS (T) = 0.23 M				SLAB THICKNESS (T) = 0.25 M			SLAB THICKNESS (T) = 0.28 M		
TYPE OF STEEL	ROAD WAY WIDTH (W)	SPACING OF TRANSVERSE BARS (X)	SPACING OF LONGITUDINAL BARS (Y)	ROAD WAY WIDTH (W)	SPACING OF TRANSVERSE BARS (X)	SPACING OF LONGITUDINAL BARS (Y)	ROAD WAY WIDTH (W)	SPACING OF TRANSVERSE BARS (X)	SPACING OF LONGITUDINAL BARS (Y)
RB9	0 <W≤ 6.20	0.30	0.175	0 <W≤ 5.70	0.30	0.15	0 <W≤ 5.10	0.30	0.15
	6.20 <W≤ 7.50	0.25		5.70 <W≤ 6.90	0.25		5.10 <W≤ 6.10	0.25	
	7.50 <W≤ 9.40	0.20		6.90 <W≤ 8.60	0.20		6.10 <W≤ 7.70	0.20	
DB12	0 <W≤ 18.60	0.30	0.30	0 <W≤ 17.10	0.30	0.30	0 <W≤ 15.30	0.30	0.30
	18.60 <W≤ 20.30	0.275		17.10 <W≤ 18.60	0.275		15.30 <W≤ 16.60	0.275	
CDR 6	0 <W≤ 11.00	0.15	0.15	0 <W≤ 10.00	0.15	0.15	–	–	–
CDR 9	0 <W≤ 25.00	0.15	0.15	0 <W≤ 23.00	0.15	0.15	0 <W≤ 20.50	0.15	0.15
	25.00 <W≤ 38.00	0.10		23.00 <W≤ 35.00	0.10		20.50 <W≤ 31.00	0.10	
CDD 6	0 <W≤ 11.00	0.15	0.15	0 <W≤ 11.00	0.15	0.15	–	–	–
CDD 9	0 <W≤ 26.50	0.15	0.15	0 <W≤ 24.50	0.15	0.15	0 <W≤ 22.20	0.15	0.15
	26.50 <W≤ 40.00	0.10		24.50 <W≤ 37.00	0.10		22.00 <W≤ 33.00	0.10	

REMARK : ROAD WAY WIDTH SHOULD BE CONSIDERED AS THE DISTANCE BETWEEN FREE LONGITUDINAL EDGES (NOT TIE BAR)

NOTES

1. ALL DIMENSIONS ARE IN METERS UNLESS OTHERWISE INDICATED.
2. CONCRETE PAVEMENT CONSTRUCTION CONTROL SHALL CONFORM TO THE STANDARD DH–S 309/2544 REGARDING "REGULATIONS OF CONSTRUCTIONS CONTROL OF PORTLAND CEMENT CONCRETE PAVEMENT" UNLESS INDICATED IN THIS DRAWING. CONCRETE PAVEMENT SHALL BE CONSTRUCTION ON THE SAND CUSHION OR CRUSHED ROCK CONFORM TO THE STANDARD DH–S 211 OR DH–S 212
3. CONCRETE FOR JOINT REINFORCED CONCRETE PAVEMENT SHALL BE PROPERTIES AS FOLLOWS :
   - 3.1 CONCRETE SHALL HAVE A MINIMUM ULTIMATE COMPRESSIVE STRENGTH OF 32 MPa (325 KG/CM^2) FOR 0.15X0.15X0.15 M CUBE AT 28 DAYS. AN APPROXIMATE MIX DESIGN PER CUBIC METER IS SUGGESTED SHOULD BE PORTLAND CEMENT TYPE1 MORE THAN 350 KG/M^3 AND W/C NOT LESS THAN 0.55 BY WEIGHT AND SLUMP NOT LESS THAN 0.03 M AND NOT MORE THAN 0.07 M.
   - 3.2 PORTLAND CEMENT TYPE1 CONFORMING TO TIS.15 OR OTHERWISE INDICATED
   - 3.3 FINE AGGREGATE SHALL CONFORM TO THE STANDARD DH–SP 201 AND COARSE AGGREGATE SHALL CONFORM TO THE STANDARD DH–SP 202
   - 3.4 ADMIXTURE SHALL CONFORM TO TIS. 733 BEFOR USING SHALL BE APPROVAL FROM ENGINEER
4. REINFORCED FOR JOINT REINFORCED CONCRETE PAVEMENT SHOULD BE USE REINFORCING STEEL OR STEEL WIRE FABRICS PROPERTIES AS FOLLOWS :
   - 4.1 REINFORCING STEEL SHALL CONFORM TIS.20 GRADE SR 24 FOR ROUND BARS AND TIS.24 GRADE SD 40 FOR DEFORMED BAR.
   - 4.2 STEEL WIRE FABRICS SHALL CONFORM TIS.737 BEFORE USING WELDED STEEL WIRE FABRIC THE SAMPLES SHALL BE SENT TO MATERIAL AND RESEARCH DIVISION DOH. OR OTHER INSTITUTE RECOGNIZED FOR APPROVING. COLD DRAWN DEFORMED STEEL WIRE (CDD) SHALL CONFORM TIS.943 SHALL HAVE ULTIMATE TENSILE STRENGTH OF NOT LESS THAN 585 MPA. AND YIELD STRENGTH OF NOT LESS THAN 515 MPA. COLD DRAWN ROUND STEEL WIRE (CDR) SHALL CONFORM TIS.747 SHALL HAVE ULTIMATE TENSILE STRENGTH OF NOT LESS THAN 550 MPA. AND YIELD STRENGTH OF NOT LESS THAN 485 MPA.
   - 4.3 CLEAR CONCRETE COVER SPACE OF WELDED STEEL WIRE FABRIC SHALL CONFORM TO BAR MESH SPECIFICATION IN THIS DRAWING. AND LAP SPLICES OF BAR MISH SHALL NOT BE LESS THAN 40 TIMES OF WIRE DIAMETER AND NOT LESS THAN SPACING OF CROSS WIRE ±5 CM.
   - 4.4 REINFORCEMENT SHALL BE DESIGNED BASE ON ROAD WAY WIDTH AT ULTIMATE STAGE. THE ROAD WAY WIDTH SHALL BE CONSIDERED AS THE DISTANCE BETWEEN FREE LONGITUDINAL EDGES (NOT TIE BAR)
5. CONCRETE PAVER SHALL BE REQUIRED FOR CONCRETE PLACING. INCASE OF NECESSARY PLACING CONCRETE BY MANPOWER, CONCRETE SHALL BE PLACING ONLY GAP SPACE NOT MORE THAN 30.00 METERS LONG.
   - 5.1 SLUMP OF CONCRETE NOT LESS THAN 0.03 M AND NOT MORE THAN 0.07 M. SHALL CONFORM TO THE STANDARD DH–T 304. INCASE TO BE CONCRETE PAVER SLUMP SHALL BE ± 0.02 M. AT SLUMP DESIGN
   - 5.2 CONCRETE PAVER SHALL BE AUTOMATIC MOVE ON THE FROMWORK OR RAILS ARE INSTALLED ON THE SIDE OF FROMWORK AND INSTALLED CONCRETE SPREADER TO SPREAD CONCRETE FULL SURFACE OF FROMWORK
   - 5.3 CONCRETE VIBRATOR SHALL BE VIBRATION TO THE FULL WIDTH OF FROMWORK AND NOT EFFECT WITH DOWEL BAR AND TIE BAR.
6. ALL JOINTS EXCEPT EXPANSION JOINT SHALL BE MADE BY SLOT CUTTING MACHINE ONLY. FOAM SHEET, PLYWOOD, TIMBER OR MATERIAL OF THE SAME TYPE SHALL NOT BE ALLOWED.
7. PLASTIC SHEET USED IN CONSTRUCTION SHALL CONFORM TO DWG. GD–602
8. EXPANSION JOINT SHALL BE APPLIED IN CASE OF EXTENDED OLD CONCRETE PAVEMENT ONLY AT LOCATION HAVE EXPANSION JOINT AND APPLIED AT THE BRIDGE STRUCTURE OR APPROACH SLAB.
9. THE THICKNESS OF FLEXIBLE PAVEMENT CORRESPONDED TO THE FIGURE CONFORMING TO TYPICAL CROSS–SECTION.
10. THE REINFORCEMENT FOR JOINT REINFORCED CONCRETE PAVEMENT SHALL FOLLOW TABLE 1. IN CASE OF THE ROAD WAY WIDTH GREATER THAN THAT SPECIFIED IN TABLE 1, EQUATION (1) SHALL BE APPLIED TO DETERMINE REINFORCEMENT.

EQUATION OF DETERMINE REINFORCEMENT IN CONCRETE PAVEMENT

$$A_s = \frac{f_d W \gamma_{conc} T}{2 f_s} \quad \text{– (EQUATION 1)}$$

- A_s = CROSS SECTIONAL AREA OF REINFORCING
- f_d = FRICTION RESISTANCE BETWWEN THE BOTTOM OF THE SLAB AND THE TOP OF SUBBASE OR SUBGRADE LAYER
- W = ROAD WAY WIDTH SHOULD BE CONSIDERED AS THE DISTANCE BETWEEN FREE LONGITUDINAL EDGES (NOT TIE BAR)
- γ_{conc} = UNIT WEIGHT OF CONCRETE
- T = SLAB THICKNESS
- f_s = 3/4 f_y
- f_y = YIELD STRENGTH OF REINFORCING STEEL

REF.	REVISION	SIGNATURE	DATE
A	Former Dwg.No. TS–401 and TS–402 with general revision and added 28 cm Slab thk.		2013

KINGDOM OF THAILAND

MINISTRY OF TRANSPORT

DEPARTMENT OF HIGHWAYS

STANDARD DRAWING

JOINT REINFORCED CONCRETE PAVEMENT (JRCP)

PLAN SECTION AND REINFORCEMENT DETAILS

DESIGNED : D.O.H. & CONSULTANTS	CHECKED : BUREAU OF LOCATION & DESIGN	DATE : OCT 2015
SUBMITTED : (DIRECTOR OF LOCATION & DESIGN BUREAU)		SCALE : AS SHOWN
APPROVED : (FOR DIRECTOR GENERAL)		DWG NO. GD–601
		SHEET NO. 33

D:\std dwg 2015\GD-601(REV00)

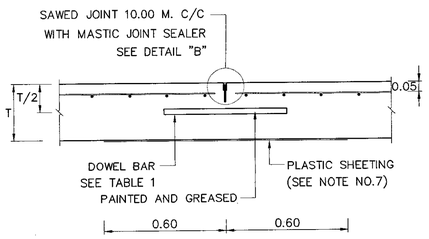

DETAIL OF CONTRACTION JOINT

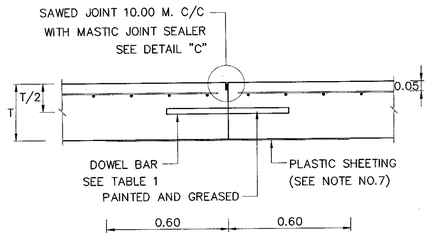

DETAIL OF CONSTRUCTION JOINT

DETAIL OF TRANSVERSE JOINT

NOT TO SACLE

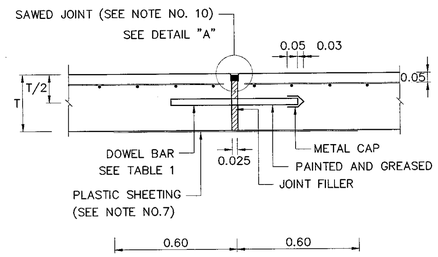

DETAIL OF EXPANSION JOINT

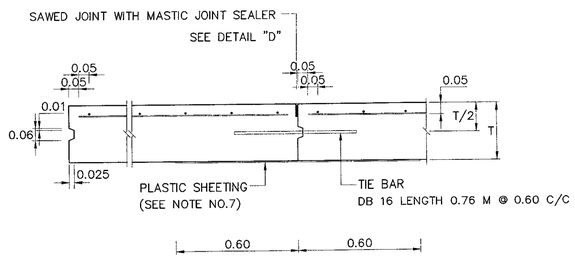

DETAIL OF LONGITUDINAL JOINT

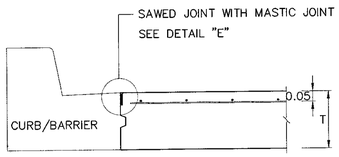

DETAIL OF DUMMY JOINT

DETAIL OF LONGITUDINAL JOINT

NOT TO SCALE

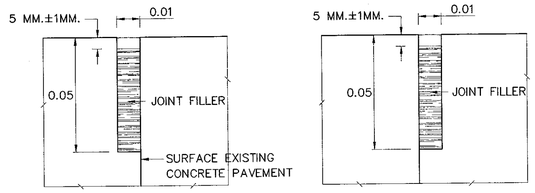

DETAIL "D" (LONGITUDINAL JOINT)

DETAIL "E" (DUMMY JOINT)

DETAIL OF SAWED FOR LONGITUDINAL JOINT

NOT TO SCALE

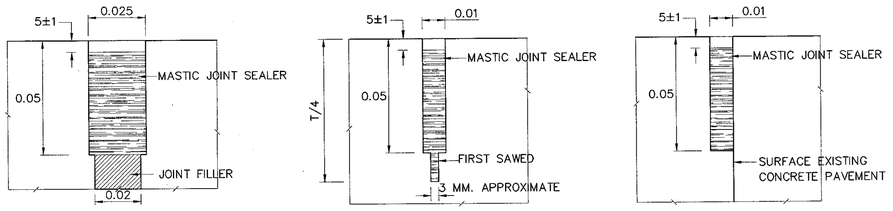

DETAIL "A" (EXPANSION JOINT)

DETAIL "B" (CONTRACTION JOINT)

DETAIL "C" (CONSTRUCTION JOINT)

DETAIL OF SAWED JOINT FOR TRANSVERSE JOINT

NOT TO SCALE

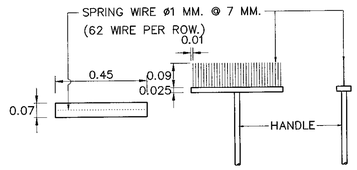

PLAN SIDE VIEW

DETAIL OF BROOM SURFACE CONCRETE PAVEMENT

NOT TO SCALE

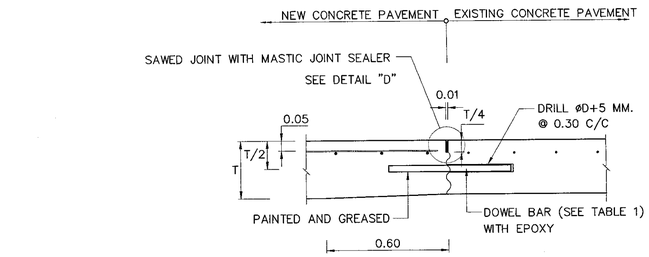

DETAIL OF CONSTRUCTION JOINT

DETAIL OF JOINT BETWEEN NEW AND EXISTING CONCRETE PAVEMENT

NOT TO SCALE

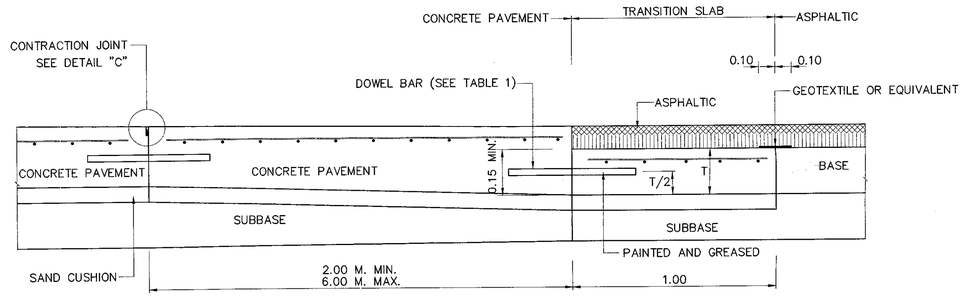

DETAIL OF JOINT BETWEEN CONCRETE PAVEMENT AND FLEXIBLE PAVEMENT

NOT TO SCALE

NOTES :

1. ALL DIMENSIONS ARE IN METERS UNLESS OTHERWISE INDICATED.
2. MASTIC JOINT SEALER SHALL BE OF THE HOT POURED ELASTIC TYPE CONFORMING TO TIS.479.
3. JOINT FILLER SHALL CONFORM TO TIS. 1041 AND TIS. 1079.
4. ALL JOINTS EXCEPT EXPANSION JOINT SHALL BE MADE BY SLOT CUTTING MACHINE ONLY. FOAM SHEET, PLYWOOD, TIMBER OR MATERIAL OF THE SAME TYPE SHALL NOT BE ALLOWED.
5. PREPARATION OF JOINT FOR MASTIC JOINT SEALER.
   - 5.1 THE JOINT SHALL BE CLEANED WITH A BLOWER TO GET RID OF ALL KINDS OF DIRT. THE JOINT SHALL BE COMPLETELY DRY.
   - 5.2 PRIMER SHALL BE APPLIED TO THE JOINT WITH A BRUSH OR SPRAYER. THE JOINT SHALL BE LET DRY BEFORE THE POURING OF MASTIC JOINT SEALER WHICH HAS BEEN BOILED AND DISSOLVED BY MEANS OF HEAT CONDUCTIVITY TO THE SPECIFIED TEMPERATURE.
   - 5.3 JOINTS SHALL BE CUT AND MASTIC JOINT SEALER SHALL BE DROPPED AS SOON AS POSSIBLE.
   - 5.4 MASTIC JOINT SEALER SHALL BE DROPPED USING A JOINT SEALANT APPLYING MACHINE.
6. TIE BAR SHALL BE DEFORMED BAR CONFORMING TO TIS 24, SD 40 AND DOWEL BAR SHALL BE PLAIN AND ROUND BAR CONFORMING TO AASHTO M31 GRADE60 OR ASTM A615 GRADE 60, AND SHALL HAVE YIELD STRENGTH OF NOT LESS THAN 420 MPA.
7. PLASTIC SHEET USED IN CONSTRUCTION SHALL HAVE THE FOLLOWING REQUIREMENTS:
   - 7.1 THICKNESS OF 0.07 MM. WITH A TOLERANCE OF NOT MORE THAN 7 % SHALL BE REQUIRED.
   - 7.2 WIDTH SHALL NOT BE LESS THAN 1.20 M.
   - 7.3 IT SHALL BE COLORLESS, TRANSPARENT AND WATERPROOF, FREE FROM POROUS AREA, TURN AREA AND BLISTERING AREA WHICH ARE VISIBLE BY NAKED EYE. EDGE SHALL BE STRAIGHT.
   - 7.4 CONTINUOUS LENGTH SHALL BE REQUIRED TO THE WIDTH OF TRAFFIC LANES. CONNECTION ALLOWED AT LONGITUDINAL JOINTS WITH NOT LESS THAN 20 CM OVERLAPPING SHALL BE REQUIRED.
8. EPOXY SHALL CONFORM TO ASTM A884/A884M-12 OR EQUIVALENT.
9. GEOTEXTILE SHALL CONFORM TO AASHTO M288-05 OR EQUIVALENT.
10. EXPANSION JOINT SHALL BE APPLIED IN OF EXPANSION OF EXISTING CONCRETE PAVEMENT ONLY. THE LOCATION OF NEW EXPANSION JOINT SHALL BE THE SAME AS THE LOCATION OF EXISTING EXPANSION JOINT AND APPLIED AT THE BRIDGE STRUCTURE OR APPROACH SLAB.
11. CONCRETE PAVEMENT CONSTRUCTION CONTROL SHALL CONFORM TO THE STANDARD DH-S 309/2544 REGARDING "REGULATIONS OF CONSTRUCTIONS CONTROL OF PORTLAND CEMENT CONCRETE PAVEMENT" UNLESS OTHERWISE INDICATED IN THIS DRAWING. CONCRETE PAVEMENT SHALL BE CONSTRUCTED ON THE SAND CUSHION OR CRUSHED ROCK CONFORMING TO THE STANDARD DH-S 211 OR DH-S 212.

TABLE 1 DOWEL BAR FOR TRANSVERSE JOINTS

SLAB THICKNESS	DIAMETER (MM)	LENGTH	SPACING
0.23	30	0.50	0.30
0.25	32		
0.28	35		

REF.	REVISION	SIGNATURE	DATE
A	Former Dwg.No. TS-401 and TS-402 with general revision and added 28 cm Slab thk.		2013

KINGDOM OF THAILAND

MINISTRY OF TRANSPORT

DEPARTMENT OF HIGHWAYS

STANDARD DRAWNG

JOINT REINFORCED CONCRETE PAVEMENT (JRCP)

DETAILS OF JOINT

DESIGNED : D.O.H. & CONSULTANTS	**CHECKED :** BUREAU OF LOCATION & DESIGN	**DATE :** OCT 2015
	SUBMITTED : (DIRECTOR OF LOCATION & DESIGN BUREAU)	**SCALE :** AS SHOWN
	APPROVED : (FOR DIRECTOR GENERAL)	**DWG NO.** GD-602
		SHEET NO. 34

D:\std dwg 2015\GD-602(REV00)

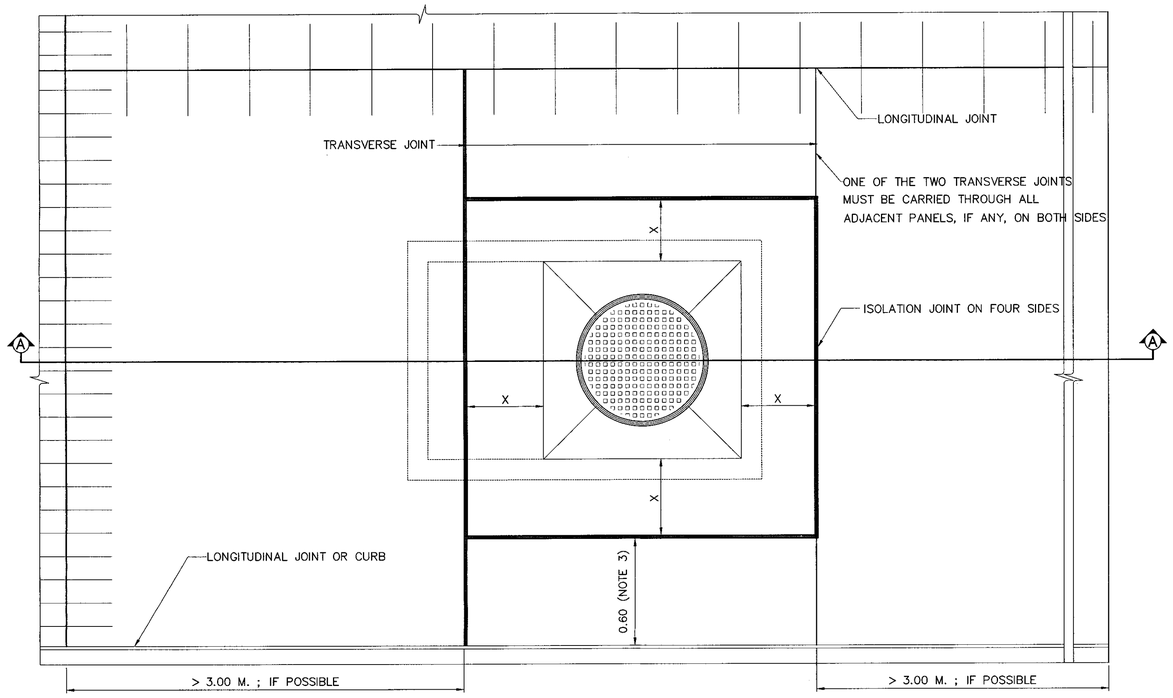

TYPICAL LAYOUT OF BOX–OUT SLAB FOR ISOLATION JOINT

NOT TO SCALE

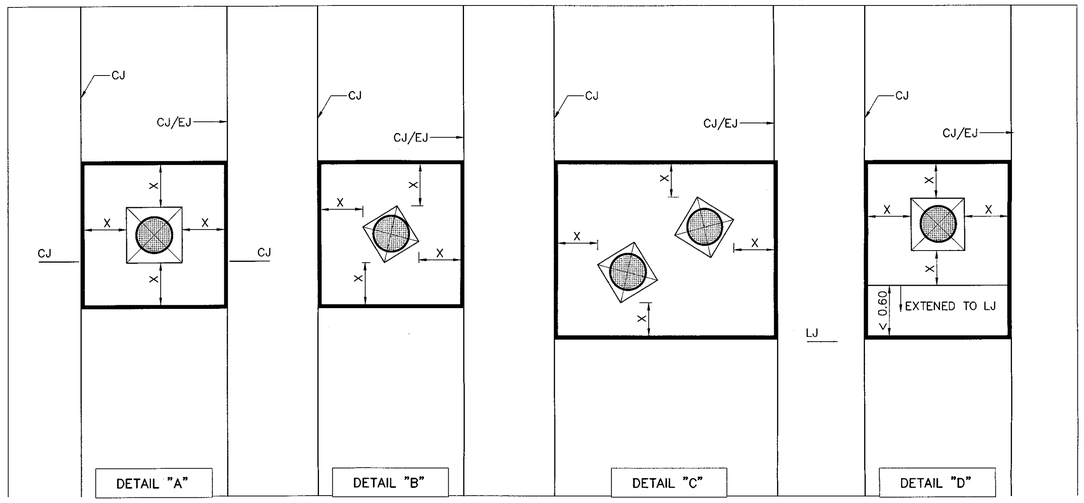

LAYOUTS OF MAN HOLE

NOT TO SCALE

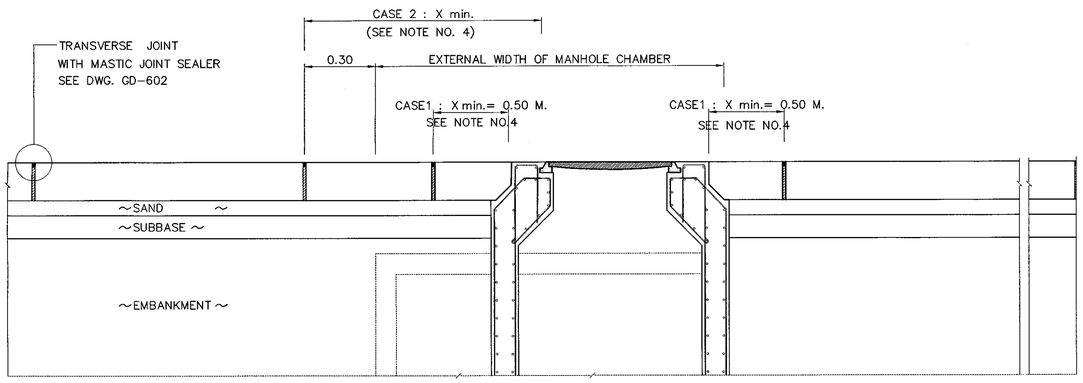

SECTION A–A

DETAIL OF JOINT AT MANHOLE

NOT TO SCALE

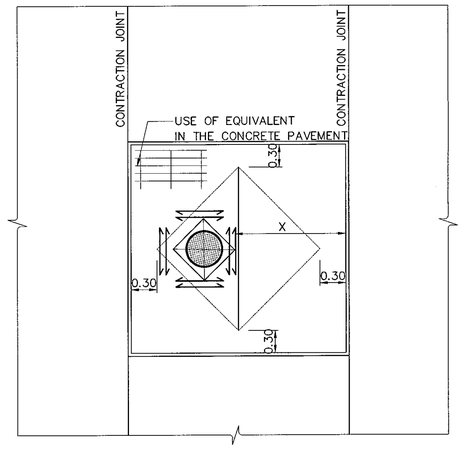

DETAIL OF REINFORCED AT MANHOLE

(CASE NON–ORTHOGONAL LAYOUT)

NOT TO SCALE

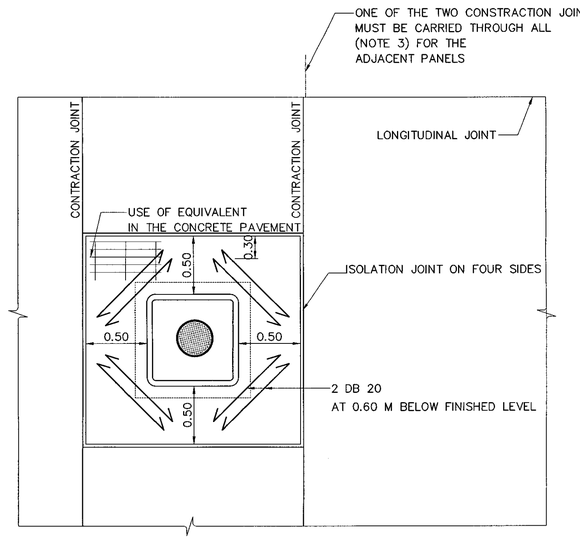

DETAIL OF REINFORCED AT MANHOLE

(CASE ORTHOGONAL LAYOUT)

NOT TO SCALE

NOTES

1. ALL DIMENSIONS ARE IN METERS UNLESS OTHERWISE INDICATED.
2. ABBREVIATION : CJ : CONTRACTION JOINT
   LJ : LONGITUDINAL JOINT
3. IF WIDTH OF REMAINING SLAB IS LESS THAN 0.60 M, BLOCK–OUT SLAB SHALL EXTEND TO THE LONGITUDINAL JOINT.
4. X (MINIMUM) : CASE 1 : WHERE ONLY MANHOLE SHAFT PROTRUDES ABOVE FORMATION LEVEL, XMIN = 0.50 M
   CASE 2 : WHERE MANHOLE CHAMBER PROTRUDES ABOVE FORMATION LEVEL, XMIN = 0.30 M. BEYOND EDGE OF UNDERGROUND CHAMBER.
5. MASTIC JOINT SEALER SHALL BE OF THE HOT POURED ELASTIC TYPE CONFORMING TO TIS.479.
6. JOINT FILLER SHALL CONFORM TO TIS. 1041 AND TIS. 1079.
7. PREPARATION OF JOINT FOR MASTIC JOINT SEALER.
   7.1 THE JOINT SHALL BE CLEANED WITH A BLOWER TO GET RID OF ALL KINDS OF DIRT. THE JOINT SHALL BE COMPLETELY DRY.
   7.2 PRIMER SHALL BE APPLIED TO THE JOINT WITH A BRUSH OR SPRAYER. THE JOINT SHALL BE LET DRY BEFORE THE POURING OF MASTIC JOINT SEALER WHICH HAS BEEN BOILED AND DISSOLVED BY MEANS OF HEAT CONDUCTIVITY TO THE SPECIFIED TEMPERATURE.
   7.3 JOINTS SHALL BE CUT AND MASTIC JOINT SEALER SHALL BE DROPPED AS SOON AS POSSIBLE.
   7.4 MASTIC JOINT SEALER SHALL BE DROPPED USING A JOINT SEALANT APPLYING MACHINE
8. CONCRETE PAVEMENT CONSTRUCTION CONTROL SHALL CONFORM TO THE STANDARD DH–S 309/2544 REGARDING "REGULATIONS OF CONSTRUCTIONS CONTROL OF PORTLAND CEMENT CONCRETE PAVEMENT" UNLESS OTHERWISE INDICATED IN THIS DRAWING. CONCRETE PAVEMENT SHALL BE CONSTRUCTED ON THE SAND CUSHION OR CRUSHED ROCK CONFORMING TO THE STANDARD DH–S 211 OR DH–S 212.

REF.	REVISION	SIGNATURE	DATE

KINGDOM OF THAILAND

MINISTRY OF TRANSPORT

DEPARTMENT OF HIGHWAYS

STANDARD DRAWING

JOINT REINFORCED CONCRETE PAVEMENT (JRCP)

DETAILS OF JOINT AT MANHOLE

DESIGNED : D.O.H. & CONSULTANTS	CHECKED : BUREAU OF LOCATION & DESIGN	DATE : OCT 2015
SUBMITTED : (DIRECTOR OF LOCATION & DESIGN BUREAU)		SCALE : AS SHOWN
APPROVED : (FOR DIRECTOR GENERAL)		DWG NO. GD–603
		SHEET NO. 35

D:\std dwg 2015\GD-603(REV00)

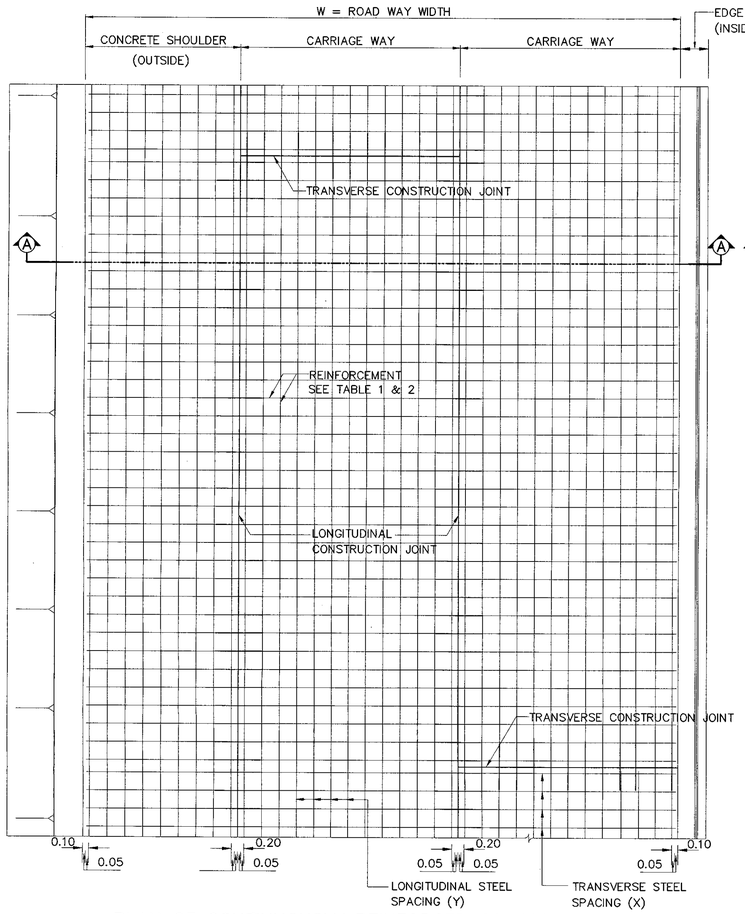

PLAN OF CONTINUOUSLY REINFORCED CONCRETE PAVEMENT
(CONCRETE SHOULDER)

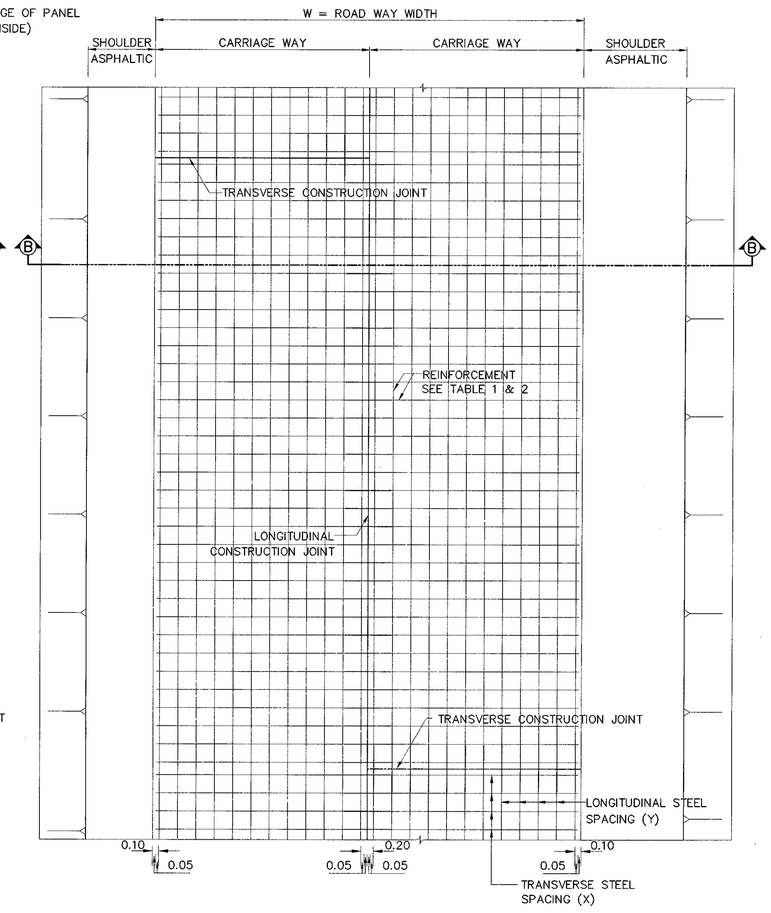

PLAN OF CONTINUOUSLY REINFORCED CONCRETE PAVEMENT
(ASPHALTIC SHOULDER)

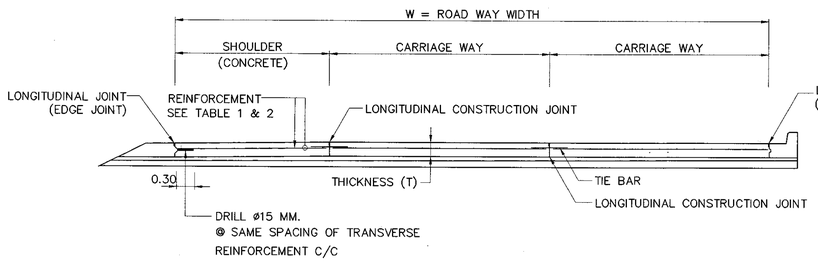

SECTION A–A

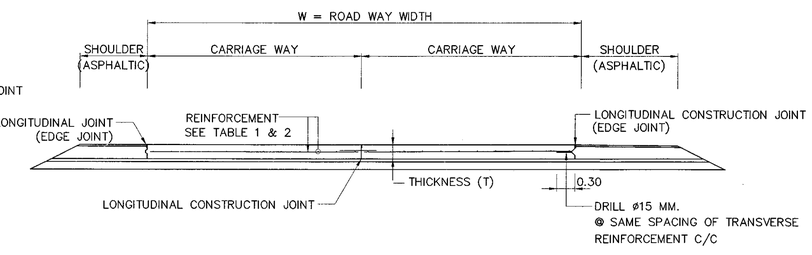

SECTION B–B

PLAN AND SECTION OF CONTINUOUSLY REINFORCED CONCRETE PAVEMENT (CRCP)

SCALE 1 : 50

NOTES

1. ALL DIMENSIONS ARE IN METERS UNLESS OTHERWISE INDICATED.
2. CONCRETE PAVEMENT CONSTRUCTION CONTROL SHALL CONFORM TO THE STANDARD DH–S 309/2544 REGARDING "REGULATIONS OF CONSTRUCTIONS CONTROL OF PORTLAND CEMENT CONCRETE PAVEMENT "UNLESS INDICATED IN THIS DRAWING. CONCRETE PAVEMENT SHALL BE CONSTRUCTED SAND CUSHION OR CRUSHED ROCK CONFORM TO THE STANDARD DH–S 211 OR DH–S 212.
3. CONCRETE PROPERTIES FOR CONTINUOUE REINFORCED CONCRETE PAVEMENT SHALL BE AS FOLLOWS:
   - 3.1 CONCRETE SHALL HAVE A MINIMUM ULTIMATE COMPRESSIVE STRENGTH OF 32 MPA (325 KG/CM^2) FOR 0.15X0.15X0.15 M. CUBE AT 28 DAYS. CONCRETE SHALL BE PORTLAND CEMENT TYPE1 WITH CEMENT MORE THAN 350 KG/M^3 AND W/C OF NOT LESS THAN 0.55 BY WEIGHT AND SLUMP OF NOT LESS THAN 0.03 M AND NOT MORE THAN 0.07 M.
   - 3.2 PORTLAND CEMENT TYPE1 SHALL CONFORM TO TIS.15 OR OTHERWISE INDICATED.
   - 3.3 FINE AGGREGATE SHALL CONFORM TO THE STANDARD DH–SP 201 AND COARSE AGGREGATE SHALL CONFORM TO THE STANDARD DH–SP 202.
   - 3.4 ADMIXTURE SHALL CONFORM TO TIS. 733 AND SHALL BE APPROVED BY THE ENGINEER BEFORE USING.
4. REINFORCEMENT FOR CONTINUOUSLY REINFORCED CONCRETE PAVEMENT SHALL BE EITHER REINFORCING STEEL OR STEEL WIRE FABRICS WITH PROPERTIES AS FOLLOWS :
   - 4.1 REINFORCING STEEL SHALL CONFORM TO TIS.20 GRADE SR 24 FOR ROUND BARS AND TIS.24 GRADE SD 40 FOR DEFORMED BAR.
   - 4.2 CLEAR CONCRETE COVER OF WELDED STEEL WIRE FABRIC SHALL CONFORM TO BAR MESH SPECIFICATION IN THIS DRAWING AND LAP SPLICES OF BAR MESH SHALL NOT BE LESS THAN 40 TIMES OF WIRE DIAMETER AND NOT LESS THAN SPACING OF CROSS WIRE ±5 CM.
5. TRANSVERSE REINFORCEMENT SHALL BE DESIGNED BASED ON ROAD WAY WIDTH AT ULTIMATE STAGE. THE ROAD WAY WIDTH SHALL BE CONSIDERED AS THE DISTANCE BETWEEN FREE LONGITUDINAL EDGES (NO TIE BAR).
6. CONCRETE PAVER SHALL BE REQUIRED FOR CONCRETE POURING. IN CASE OF NECESSARY POURING CONCRETE BY MANPOWER, CONCRETE SHALL BE POURED ONLY GAP SPACE OF NOT MORE THAN 30.00 METERS LONG.
   - 6.1 CONCRETE SLUMP SHALL BE NOT LESS THAN 0.03 M AND NOT MORE THAN 0.07 M. SLUM TEST SHALL CONFORM TO THE STANDARD DH–T 304.
   - 6.2 CONCRETE PAVER SHALL BE ABLE TO AUTOMATICALLY MOBILIZE ON THE FORMWORK OR RAILS INSTALLED ALONG THE SIDE OF FORMWORK AND CAPABLE OF SPREADING CONCRETE FOR THE WHOLE LANE WIDTH AT ONCE.
   - 6.3 CONCRETE VIBRATOR SHALL BE EITHER VIBRATING PLATE OR INTERNAL VIBRATOR THAT CAPABLE OF VIBRATING THE CONCRETE AT FULL LANE WIDTH AT ONCE BUT SHALL NOT AFFECT TO FORMWORK, DOWEL BAR OR TIE BAR.
7. ALL JOINTS EXCEPT EXPANSION JOINT SHALL BE MADE BY SLOT CUTTING MACHINE ONLY. FOAM SHEET, PLYWOOD, TIMBER OR MATERIAL OF THE SAME TYPE SHALL NOT BE ALLOWED.
8. PLASTIC SHEET USED IN CONSTRUCTION SHALL CONFORM TO DWG. GD–602
9. THE THICKNESS OF CONTINUOUSLY REINFORCED CONCRETE PAVEMENT SHALL BE SPECIFIED BY THE DESIGNED ENGINEER AS SHOWN IN THE TYPICAL ROAD CROSS–SECTION OF THE PROJECT.
10. CONTINUOUSLY REINFORCED CONCRETE PAVEMENT (CRCP) ARE REINFORCED IN THE LONGITUDINAL DIRECTION ALONG THE ROAD FOR LOAD TRANSFER. CONTINUOUSLY REINFORCED CONCRETE PAVEMENT (CRCP) CAN REDUCE THE PROBLEM AT THE JOINTS AND REDUCE THE DAMAGE THAT MAY OCCUR THROUGHOUT THE LIFESPAN.
11. THE DESIGN OF SLAB THICKNESS OF CONTINUOUSLY REINFORCED CONCRETE PAVEMENT (CRCP) IS THE SAME AS A JOINTED REINFORCED CONCRETE PAVEMENT (JRCP).
12. REINFORCEMENT DESIGN FOR CONTINUOUSLY REINFORCED CONCRETE PAVEMENT (CRCP) SHALL CONFORM TO AASHTO 1993.
13. JOINT DETAILS OF CONTINUOUSLY REINFORCED CONCRETE PAVEMENT ARE SHOWN IN DWG. NO. GD–605.
14. DETAILS OF TERMINAL JOINT AND LUG ANCHOR OF CONTINUOUSLY REINFORCED CONCRETE PAVEMENT ARE SHOWN IN DWG. NO. GD–606.

TABLE 1 LONGITUDINAL REINFORCEMENT

THICKNESS (T)	SPACING OF LONGITUDINAL BARS (Y)	
	DB16	DB20
0.23	0.225	0.30
0.25	0.175	0.25
0.28	0.15	0.20

TABLE 2 TRANSVERSE REINFORCEMENT

TYPE OF STEEL	SLAB THICKNESS (T) = 0.23 M		SLAB THICKNESS (T) = 0.25 M		SLAB THICKNESS (T) = 0.28 M	
	ROAD WAY WIDTH (W)	SPACING OF TRANSVERSE BARS (X)	ROAD WAY WIDTH (W)	SPACING OF TRANSVERSE BARS (X)	ROAD WAY WIDTH (W)	SPACING OF TRANSVERSE BARS (X)
DB12	0 <W≤ 18.60	0.30	0 <W≤ 17.10	0.30	0 <W≤ 15.30	0.30
	18.60 <W≤ 20.30	0.275	17.10 <W≤ 18.60	0.275	15.30 <W≤ 16.60	0.275
	20.30 <W≤ 22.30	0.25	18.60 <W≤ 20.50	0.25	16.60 <W≤ 18.30	0.25
	22.30 <W≤ 24.80	0.225	20.50 <W≤ 23.10	0.225	18.30 <W≤ 20.60	0.225
	24.80 <W≤ 27.90	0.20	23.10 <W≤ 25.60	0.20	20.60 <W≤ 22.90	0.20
	27.90 <W≤ 31.90	0.175	25.60 <W≤ 29.30	0.175	22.90 <W≤ 26.20	0.175
	31.90 <W≤ 37.20	0.15	29.30 <W≤ 34.20	0.15	26.20 <W≤ 30.50	0.15

REMARK : ROAD WAY WIDTH SHOULD BE CONSIDERED AS THE DISTANCE BETWEEN FREE LONGITUDINAL EDGES (NOT TIE BAR)

REF.	REVISION	SIGNATURE	DATE

KINGDOM OF THAILAND

MINISTRY OF TRANSPORT
DEPARTMENT OF HIGHWAYS

STANDARD DRAWING

CONTINUOUSLY REINFORCED CONCRETE PAVEMENT (CRCP)
PLAN SECTION AND REINFORCEMENT DETAILS

DESIGNED : D.O.H. & CONSULTANTS	**CHECKED :** BUREAU OF LOCATION & DESIGN	**DATE :** OCT 2015
SUBMITTED : (DIRECTOR OF LOCATION & DESIGN BUREAU)		**SCALE :** AS SHOWN
APPROVED : (FOR DIRECTOR GENERAL)		**DWG NO.** GD–604
		SHEET NO. 36

D:\std dwg 2015\GD-604(REV00)

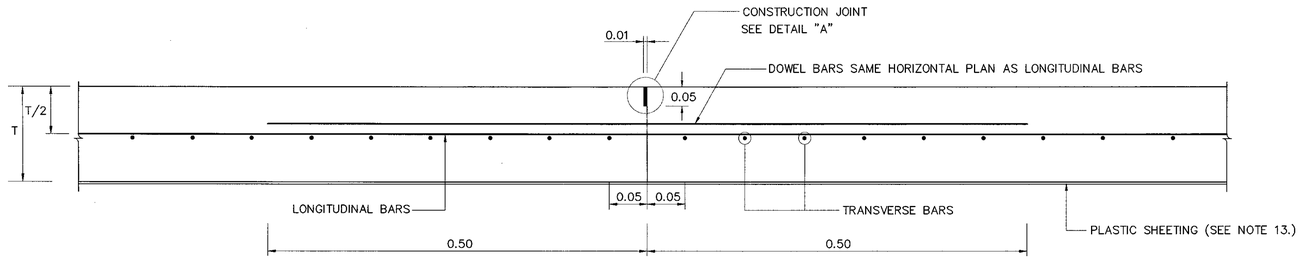

TRANSVERSE CONSTRUCTION JOINT

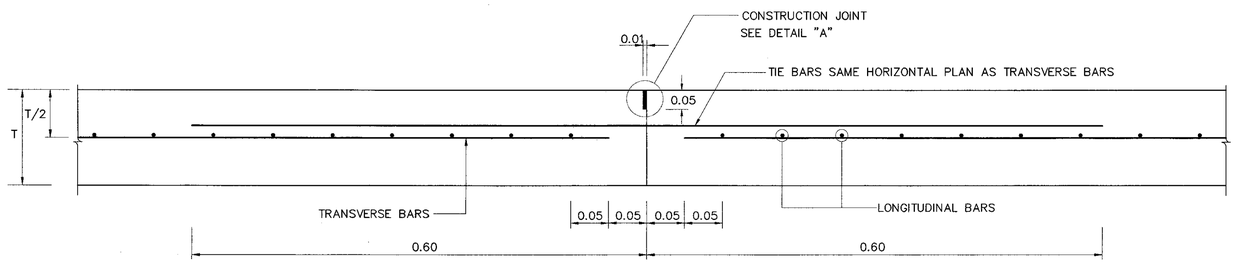

LONGITUDINAL CONSTRUCTION JOINT

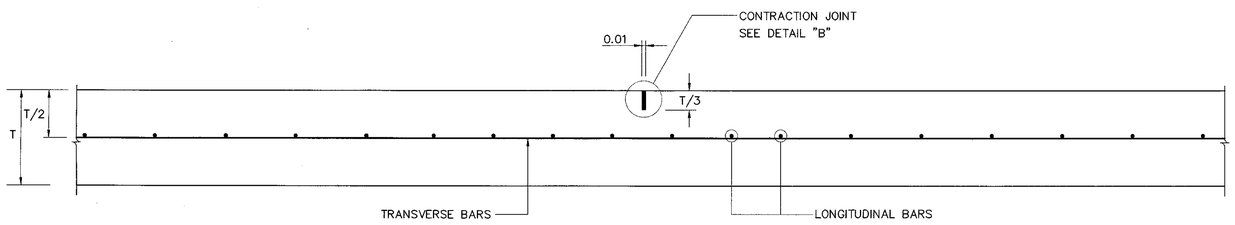

LONGITUDINAL CONTRACTION JOINT

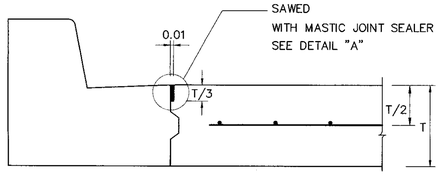

LONGITUDINAL CONSTRUCTION JOINT (DUMMY JOINT)

NOT TO SCALE

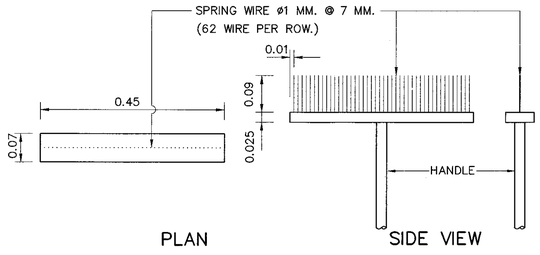

DETAIL OF BROOM SURFACE CONCRETE PAVEMENT

NOT TO SCALE

NOTES

1. ALL DIMENSIONS ARE IN METERS UNLESS OTHERWISE INDICATED.
2. MASTIC JOINT SEALER SHALL BE OF THE HOT POURED ELASTIC TYPE CONFORMING TO TIS.479.
3. JOINT FILLER SHALL CONFORM TO TIS. 1041 AND TIS. 1079.
4. ALL JOINTS EXCEPT EXPANSION JOINT SHALL BE MADE BY SLOT CUTTING MACHINE ONLY. FOAM SHEET, PLYWOOD, TIMBER OR MATERIAL OF THE SAME TYPE SHALL NOT BE ALLOWED.
   5. PREPARATION OF JOINT FOR MASTIC JOINT SEALER.
   5.1 THE JOINT SHALL BE CLEANED WITH A BLOWER TO GET RID OF ALL KINDS OF DIRT. THE JOINT SHALL BE COMPLETELY DRY.
   5.2 PRIMER SHALL BE APPLIED TO THE JOINT WITH A BRUSH OR SPRAYER. THE JOINT SHALL BE LET DRY BEFORE THE POURING OF MASTIC JOINT SEALER WHICH HAS BEEN BOILED AND DISSOLVED BY MEANS OF HEAT CONDUCTIVITY TO THE SPECIFIED TEMPERATURE.
   5.3 JOINTS SHALL BE CUT AND MASTIC JOINT SEALER SHALL BE DROPPED AS SOON AS POSSIBLE.
   5.4 MASTIC JOINT SEALER SHALL BE DROPPED USING A JOINT SEALANT APPLYING MACHINE.
6. CLEAR CONCRETE COVER OF WELDED STEEL WIRE FABRIC SHALL CONFORM TO BAR MESH SPECIFICATION IN THIS DRAWING. AND LAP SPLICES OF BAR MISH SHALL NOT BE LESS THAN 40 TIMES OF WIRE DIAMETER AND NOT LESS THAN SPACING OF CROSS WIRE ±5 CM. AND LAP SPLICE SHALL NOT BE ALL PREPARED AT THE SAME SECTIONS.
7. LONGITUDINAL CONSTRUCTION JOINT SHALL BE MADE BY SLOT CUTTING MACHINE ONLY AND SAW CUT DEPTH SHALL BE 0.05 M. THE SAW CUT DEPTH OF LONGITUDINAL CONTRACTION JOINT SHALL BE ONE THIRD OF THE SLAB THICKNESS. ALONG THESE LONGITUDINAL JOINTS, EITHER TRANSVERSE REINFORCEMENT OR TIE BAR SHALL BE USED TO TIE THE ADJACENT SLABS TOGETHER AND MAINTAIN ADEQUATE LOAD TRANSFER EFFICIENCY. TIE BAR SHALL HAVE THE SAME SIZE AND SPACING AS AT THE TRANSVERSE REINFORCEMENT. LONGITUDINAL CONSTRUCTION JOINT SHALL NOT BE CONSTRUCTED AT THE INTERVAL OF MORE THAN 4.50 M TO PREVENT LONGITUDINAL CRACKS THAT MAY OCCUR.
8. TRANSVERSE CONSTRUCTION JOINT SHALL BE MADE BY PLACING A SLOTTED HARD BOARD OR STEEL FORMWORK ACROSS THE PAVEMENT TO ALLOW THE LONGITUDINAL STEEL TO PASS THROUGH THE JOINT. ADDITIONAL 1 METER LONG DOWEL BAR WITH THE SAME SIZE AS THE LONGITUDINAL REINFORCEMENT SHALL BE REQUIRED AT TRANSVERSE CONSTRUCTION JOINT. LAP SPLICES OF LONGITUDINAL REINFORCEMENT SHALL NOT ALLOW AT 1.00 M BEFORE THE TRANSVERSE CONSTRUCTION JOINT AND AT 3.00 M AFTER THE TRANSVERSE CONSTRUCTION JOINT.
9. TRANSVERSE CONSTRUCTION JOINT SHALL BE REQUIRED WHEN STOP POURING THE CONCRETE. IF THE NEXT CONSTRUCTION PERIOD IS LONGER THAN 5 DAYS, THE EXISTING PAVEMENT CONCRETE SURFACE SHALL BE PROPERLY COVERED FOR AT LEAST 70 M LONG IN ORDER TO ADJUST THE TEMPERATURE OF EXISTING CONCRETE AND THE NEW CONCRETE PAVEMENT TO BE SIMILAR, AS WELL AS TO DECREASES TENSILE STRESS DUE TO DIFFERENTIAL TEMPERATURE BETWEEN THE EXISTING CONCRETE AND THE NEW CONCRETE PAVEMENT.
10. TERMINAL JOINTS SHALL BE CONSTRUCTED AT THE END OF CONTINUOUSLY REINFORCED CONCRETE PAVEMENT (CRCP) OR AT THE BRIDGE STRUCTURE OR AT APPROACH SLAB OR AT THE CONNECTION OF JOINT REINFORCED CONCRETE PAVEMENT (JRCP) TO CONTROL MOVEMENT OF CRCP.
11. CONCRETE PAVEMENT CONSTRUCTION CONTROL SHALL CONFORM TO THE STANDARD DH-S 309/2544 REGARDING "REGULATIONS OF CONSTRUCTIONS CONTROL OF PORTLAND CEMENT CONCRETE PAVEMENT" UNLESS OTHERWISE INDICATED IN THIS DRAWING. CONCRETE PAVEMENT SHALL BE CONSTRUCTED ON THE SAND CUSHION OR CRUSHED ROCK CONFORMING TO THE STANDARD DH-S 211 OR DH-S 212.
12. DETAILS OF LONGITUDINAL AND TRANSVERSE REINFORCEMENTS ARE SHOWN IN DWG. NO. GD-604.
13. PLASTIC SHEET USED IN CONSTRUCTION SHALL HAVE THE FOLLOWING REQUIREMENTS:
   13.1 THICKNESS OF 0.07 MM. WITH A TOLERANCE OF NOT MORE THAN 7 % SHALL BE REQUIRED.
   13.2 WIDTH SHALL NOT BE LESS THAN 1.20 M.
   13.3 IT SHALL BE COLORLESS, TRANSPARENT AND WATERPROOF, FREE FROM POROUS AREA, TURN AREA AND BLISTERING AREA WHICH ARE VISIBLE BY NAKED EYE. EDGE SHALL BE STRAIGHT.
   13.4 CONTINUOUS LENGTH SHALL BE REQUIRED TO THE WIDTH OF TRAFFIC LANES. CONNECTION ALLOWED AT LONGITUDINAL JOINTS WITH NOT LESS THAN 20 CM OVERLAPPING SHALL BE REQUIRED.

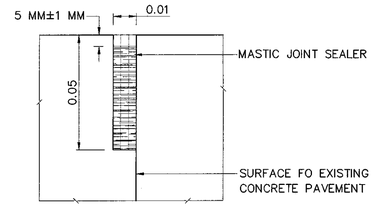

DETAIL "A"

CONSTRUCTION JOINT

NOT TO SCALE

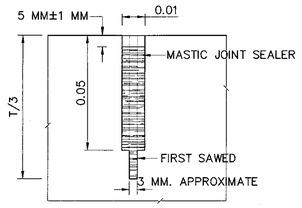

DETAIL "B"

CONTRACTION JOINT

NOT TO SCALE

REF.	REVISION	SIGNATURE	DATE

KINGDOM OF THAILAND

MINISTRY OF TRANSPORT

DEPARTMENT OF HIGHWAYS

STANDARD DRAWING

CONTINUOUSLY REINFORCED CONCRETE PAVEMENT (CRCP)
DETAILS OF JOINT

DESIGNED : D.O.H. & CONSULTANTS	**CHECKED :** BUREAU OF LOCATION & DESIGN	**DATE :** OCT 2015
SUBMITTED : (DIRECTOR OF LOCATION & DESIGN BUREAU)		**SCALE :** AS SHOWN
APPROVED : (FOR DIRECTOR GENERAL)		**DWG NO.** GD-605
		SHEET NO. 37

D:\std dwg 2015\GD-605(REV00)

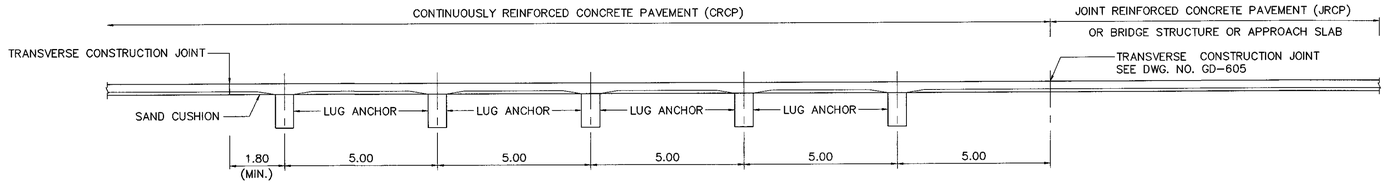

DETAIL OF TERMINAL JOINT

SCALE 1:100

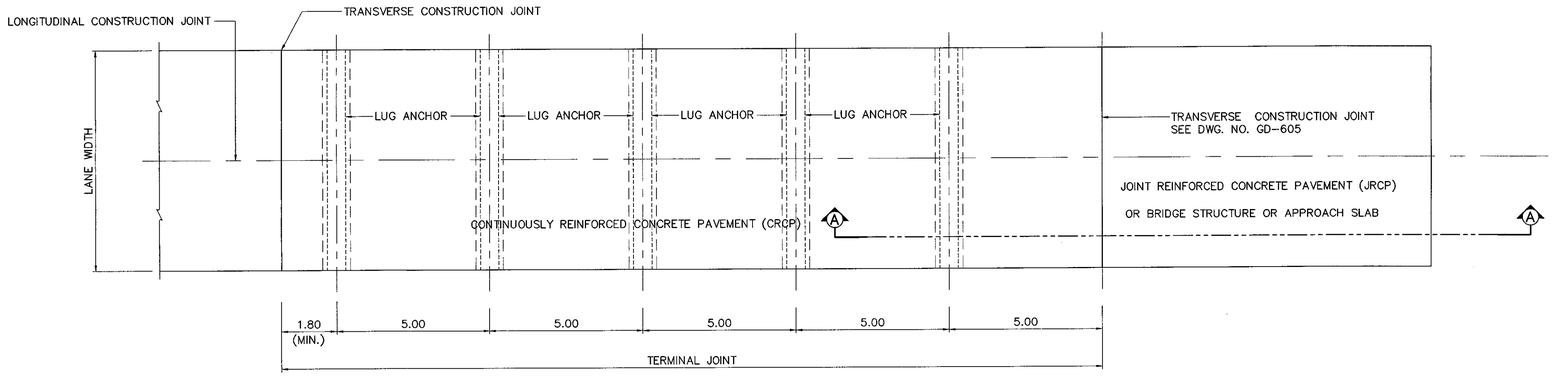

PLAN OF TERMINAL JOINT

SCALE 1:100

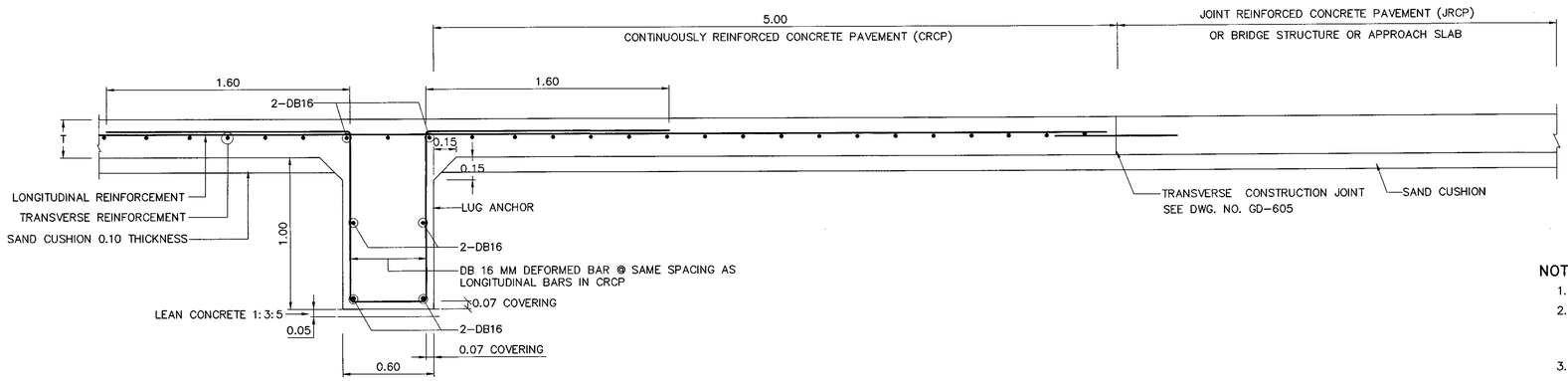

SECTION A-A

DETAIL OF LUG ANCHOR AT JOINT REINFORCED CONCRETE PAVEMENT (JRCP) OR BRIDGE STRUCTURE OR APPROACH SLAB

SCALE 1:20

NOTES

1. ALL DIMENSIONS ARE IN METERS UNLESS OTHERWISE INDICATED.
2. TERMINAL JOINTS SHALL BE CONSTRUCTED AT THE END OF CONTINUOUSLY REINFORCED CONCRETE PAVEMENT (CRCP) OR AT THE BRIDGE STRUCTURE OR AT APPROACH SLAB OR AT THE CONNECTION OF JOINT REINFORCED CONCRETE PAVEMENT (JRCP) TO CONTROL MOVEMENT OF CRCP.
3. CONCRETE PAVEMENT CONSTRUCTION CONTROL SHALL CONFORM TO THE STANDARD DH-S 309/2544 REGARDING "REGULATIONS OF CONSTRUCTIONS CONTROL OF PORTLAND CEMENT CONCRETE PAVEMENT" UNLESS OTHERWISE INDICATED IN THIS DRAWING. CONCRETE PAVEMENT SHALL BE CONSTRUCTED ON THE SAND CUSHION OR CRUSHED ROCK CONFORMING TO THE STANDARD DH-S 211 OR DH-S 212.
4. DETAILS OF LONGITUDINAL AND TRANSVERSE REINFORCEMENTS ARE SHOWN IN DWG. NO. GD-604.
5. DETAILS OF JOINT OF CONTINUOUSLY REINFORCED CONCRETE PAVEMENT ARE SHOWN IN DWG. NO. GD-605.
6. DETAILS OF JOINT REINFORCED CONCRETE PAVEMENT (JRCP) ARE SHOWN IN DWG. NO. GD-602.

REF.	REVISION	SIGNATURE	DATE

KINGDOM OF THAILAND

MINISTRY OF TRANSPORT

DEPARTMENT OF HIGHWAYS

STANDARD DRAWING

CONTINUOUSLY REINFORCED CONCRETE PAVEMENT (CRCP)
DETAILS OF TERMINAL JOINT AND LUG ANCHOR

DESIGNED : D.O.H. & CONSULTANTS	**CHECKED :** BUREAU OF LOCATION & DESIGN	**DATE :** OCT 2015
SUBMITTED : (DIRECTOR OF LOCATION & DESIGN BUREAU)		**SCALE :** AS SHOWN
		DWG NO. GD-606
APPROVED : (FOR DIRECTOR GENERAL)		**SHEET NO.** 38

D:\std dwg 2015\GD-606(REV00)

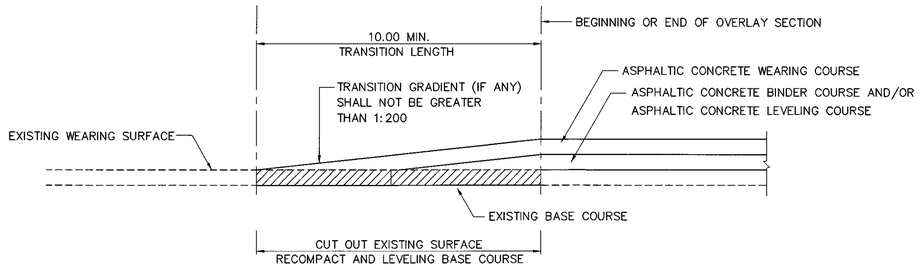

TRANSITION OF OVERLAY SECTION TO EXISTING ROAD
NOT TO SCALE

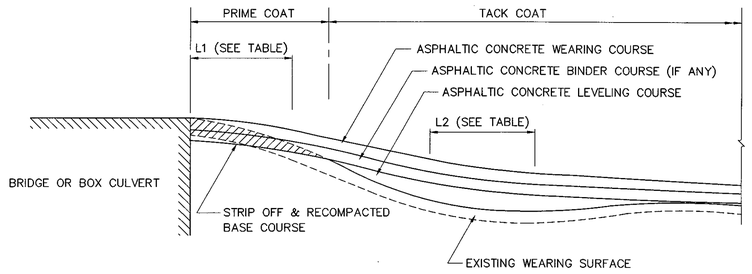

CASE 1 PAVE TO EXISTING STRUCTURE
NOT TO SCALE

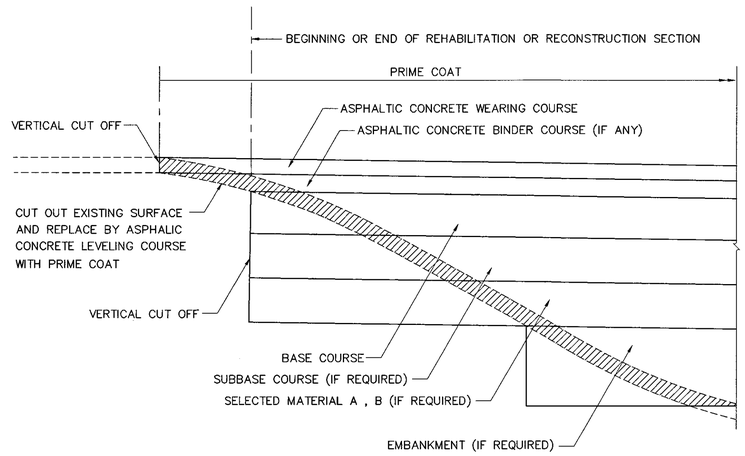

TRANSITION OF REHABILITATION OR RECONSTRUCTION TO EXISTING ROAD
NOT TO SCALE

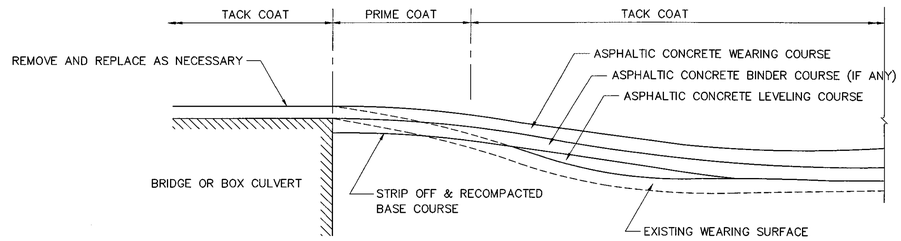

CASE 2 PAVE TO EXISTING STRUCTURE
NOT TO SCALE

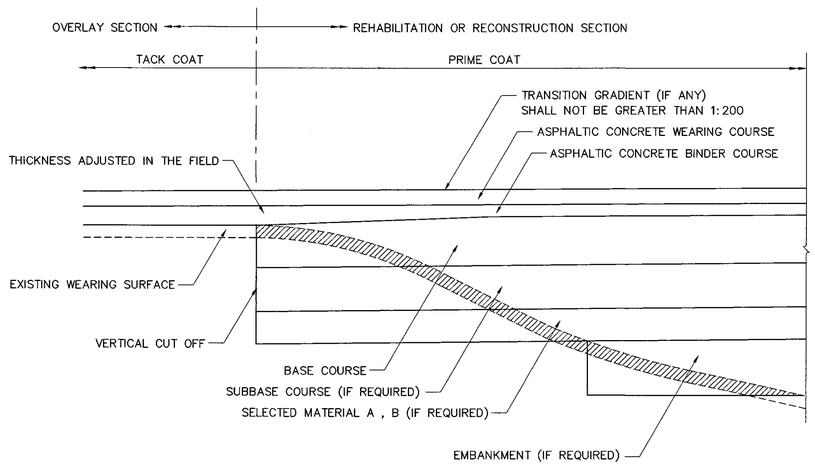

TRANSITION OF OVERLAY SECTION TO REHABILITATION OR RECONSTRUCTION SECTION
NOT TO SCALE

NOTES :

1. THE DETAILS AT LEFT ARE NOT TO SCALE AND ARE EXAGGERATED IN ORDER TO SHOW DETAIL THE EXGINEER WILL MAKE NECESSARY
2. PRIME COAT SHALL BE APPLIED TO A COMPACTED BASE AFTER STRIPPING OFF OF THE EXISTING SURFACE APPLICATION RATE SHALL BE KEPT TO A MINIMUM DEPENDING ON THE POROSITY AND TEXTURE OF THE EXPOSED BASE COURSE
3. TACK COAT SHALL BE APPLIED TO EACH LAYER OF ASPHALTIC CONCRETE
4. WHERE POSSIBLE, ASPHALTIC LEVELING COURSE SHALL BE PLACED IN LAYERS BY AN ASPHATIC FINISHER COMPACTED IN THE GENERAL SPECIFICATION.
5. PAVEMENT TRANSITION SHALL BE DESIGNED TO SUITABLE WITH PROFILE GRADE

TABLE

SUGGESTED MINIMUM LENGTH OF VERTICAL CURVE AT BRIDGE APPROACH		
ALGEBRAIC DIFERRENT OF PROPOSED	LENGTH OF CREST CURVE , L1 (m.)	LENGTH OF SAG CURVE , L2 (m.)
0 – 2 %	10	20
2 – 4 %	20	35
4 – 6 %	30	50
6 – 8 %	40	65

REF.	REVISION	SIGNATURE	DATE
A	Former Dwg.No. TS–401 and TS–402 with generol revision and added 28 cm Slab thk.		2013

KINGDOM OF THAILAND
MINISTRY OF TRANSPORT
DEPARTMENT OF HIGHWAYS

STANDARD DRAWING

PAVEMENT TRANSITION DETAILS

DESIGNED : D.O.H. & CONSULTANTS	**CHECKED :** BUREAU OF LOCATION & DESIGN	**DATE :** OCT 2015
SUBMITTED : (DIRECTOR OF LOCATION & DESIGN BUREAU)		**SCALE :** AS SHOWN
		DWG NO. GD–607
APPROVED : (FOR DIRECTOR GENERAL)		**SHEET NO.** 39

D:\std dwg 2015\GD-607(REV00)

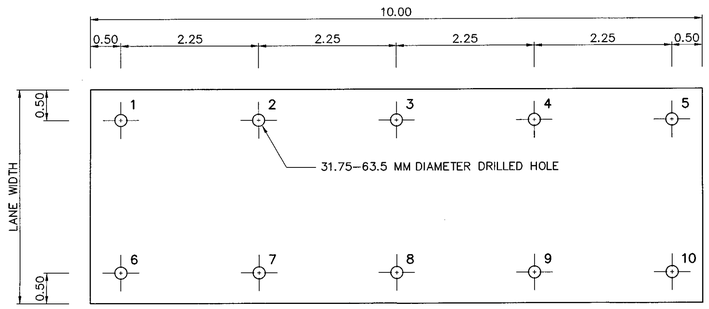

FIGURE 1 : PLAN OF DRILLING FOR CEMENT FOR CEMENT MORTAR COMPRESSION ALONG THE PUMPING JOINT

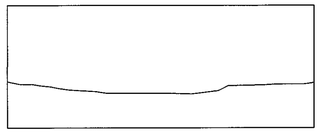

FIGURE 2A : LONGITUDINAL SINGLE CRACK

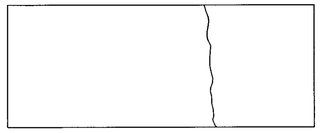

FIGURE 2B : TRANSVERSE SINGLE CRACK

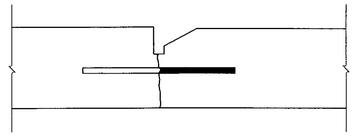

FIGURE 3 : SECTION OF SHALLOW JOINT SPALLING

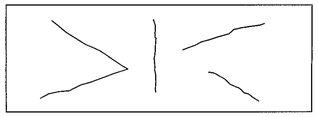

FIGURE 4 : SHATTERED SLAB

1. PUMPING JOINT REPAIRING

1.1 MATERIALS

MATERIALS TO BE MIXED AND COMPRESSED INTO CONCRETE JOINT ARE AS FOLLOW :

1.1.1 SOIL: SOIL SHALL BE SILTY SAND WHICH IS PASSED THROUGH SIEVE NO. 10 (100%) AND SIEVE NO. 200 (0–50%), AND IS NON–PLASTIC METERIAL.

1.1.2 CEMENT: CEMENT SHALL BE TYPE III OR EQUIVALENT.

1.1.3 WATER: WATER WHICH IS USED FOR MIXING WITH SILTY SAND AND CEMENT MUST BE CLEAN.

1.1.4 ADDITIVE: ADDITIVE IS USED TO INCREASE CAPACITY OF FLOWING THROUGH SPACE UNDER THE CONCRETE SLAB. THE ADDITIVE SHOULD HAVE SUITABLE QUALITIES AND WILL BE APPROVED BY THE ENGINEER.

1.1.5 MIXED RATIO: MIXED RATIO OF SLURRY CEMENT MORTAR IS AS FOLLOW:

- SILTY SAND 20 LITERS
- CEMENT 6 LITERS
- WATER 10 LITERS
- ADDITIVE AS NECESSARY

THE MIXED RATIO OF SLURRY CEMENT MORTAR CAN BE ADJUSTED BY THE ENGINEER TO OPTIMUM MIXED RATIO FOR SUITABLE CAPACITY OF FILLING INTO THE SPACE UNDER CONCRETE PAVEMENT.

1.2 WORK PREPARING

STEPS ARE AS FOLLOW:

1.2.1 THE ENGINEER SPECIFIES THE CONCRETE SLABS TO BE REPAIRED. THE CONCRETE SLABS SHOULD HAVE THE SIGN OF DEFLECTION OR THE TRANSVERSE LONGITUDINAL CRACKS THAT CAN BE CLEARLY SEEN.

1.2.2 EACH REPAIRED CONCRETE SLAB SHOULD BE MARKED AS THE DRILLING POSITION IN ORDER TO COMPRESS SLURRY CEMENT MORTAR THROUGH, AS SHOWN IN FIGURE 1.

1.2.3 DRILL THE MARKED POSITION, AS SHOWN IN STEP 1.2.2.

1.2.4 PREPARE THE SET OF SLURRY CEMENT MORTAR MIXER, SLURRY CEMENT MORTAR COMPRESSOR, AND OTHER NECESSARY MATERIALS.

1.3 SLURRY CEMENT MORTAR COMPRESSING

1.3.1 COMPRESS THE SLURRY CEMENT MORTAR INTO THE FIRST HOLE (SHOWN IN FIGURE 1). GENTLY DO IT AT FIRST SO THAT THE CEMENT CAN FLOW FREELY AND REGULARY AND THEN INCREASINGLY COMPRESS THE CEMENT TILL THE MACHINE CAN NO LONGER PRESS. WHILE COMPRESSING THE SLURRY CEMENT MORTAR INTO THE HOLE NO.1, THERE MAY BE SOME SLURRY CEMENT MORTAR SLIPPED INTO AND FILLED THE HOLE NO.2 OR NO.6 AS SHOWN IN FIGURE 1. IF SO, CORK OR PLUG THOSE PARTICULAR HOLES AND DO NOT COMPRESS THE SLURRY CEMENT MORTAR INTO THEM.

1.3.2 MOVE THE COMPRESSOR TO HOLE NO.2 AND DO THE SAME WAY AS TO HOLE NO.1. THEN MOVE TO THE REST OF THE HOLES.

1.3.3 UNCORK OR UNPLUG THE HOLES. SOME HOLES MAY NEED TO BE REFILLED A LITTLE MORE, THEN SHAPE THE HOLES.

1.3.4 LET THE SLURRY CEMENT MORTAR DRY FOR AT LEAST 12 HOURS. THE TRAFFIC SHALL NEED TO BE STOPPED.

1.4 IN THE AREA WHERE HAVING PUMPING AND SLURRY CEMENT MORTAR COMPRESSING UNDERNEATH THE CONCRETE SLAB, THE OLD JOINT SEALER HAS TO BE REMOVED AND REPLACED BY A NEW JOINT SEALER. THE JOINT SEALER SHOILD BE STANDARDIZED AS SUGGESTED BY THE DEPARTMENT OF HIGHWAYS.

2. TRANSVERSE AND LONGITUDINAL SINGLE CRACK REPAIRING (STRUCTURAL CRACK)

THE TRANSVERSE AND LONGITUDINAL CRACKS ALONG THE THICKNESS OF CONCRETE SLAB CAN BE REPAIRED BY EPOXY COMPRESSING.

THE REPAIR CAN BEGIN WITH COMPRESSING EPOXY INTO SMALL POROUS TUBES LAID ALONG THE CRACKS. THE DISTANCE BETWEEN TUBES IS ABOUT 50–100 MM THE EPOXY COMPRESSED UNDER HIGH PRESSURE WILL SPREAD THROUGH THE CRACKS ALONG THE THICKNESS OF THE CONCRETE SLAB.

THE ENGINEER MAY USE OTHER APPROPRIATE WAYS OF USING EPOXY AS FOR A BETTER RESULT. THE AIMED RESULT IS THAT THE CRACKS ARE SO WELL SEALED THAT WATER CANNOT PASS THROUGH. THE TRANSVERSE AND LONGITUDINAL CRACKS ARE SHOWN IN FIGURE 2

3. SHALLOW JOINT SPALLING REPAIRING

SHALLOW SPALLING OF JOINT CAN BE REPAIRED BY USING EPOXY MORTAR AND FOLLOWING THESE STEPS:

3.1 CUT THE CONCRETE AROUND THE AREA OF SPALLING AND MAKE A SHAPE OF RECTANGLE (AS DEEP AS 25–30 MM)

3.2 SPREAD THE CUT WITH EPOXY MORTAR WHICH IS A APPROPRIATE COMBINATION OF COARSE SAND AND EPOXY. THE USE OF EPOXY FOR REPARING WORK SHOULD FOLLOW THE INSTRUCTIONS OF THE PRODUCER AND ALSO THE APPROVAL OF THE ENGINEER. SECTION OF SHALLOW SPALLING IS SHOWN IN FIGURE 3.

4. SHATTERED SLAB REPAIRING

TO REPAIR THE SHATTERED SLAB WITH MORE THAN TWO TRANSVERSE AND LONGITUDINAL CRACKS, THE CONCRETE SLAB NEEDS TO BE DISMANTLED AND THEN THE PIECES OF CONCRETE SLAB ARE TO BE REMOVED. THEN THE AREA WHERE THE SLAB WHERE REMOVED IS POURED NEW CONCRETE OVER. THE METHOD IS AS FOLLOW :

4.1 DISMANTLE THE SHATTERED SLABS BY USING A MACHINE AND REMOVE THEM.

4.2 EXAMINE AND MAKE SURE IF THE SUBBASE OR SAND CUSHION OR CRUSHED ROCK ARE IN GOOD CONDITION. COMPACTION SHOULD BE THE STANDARD OF THE DEPARTMENT OF HIGHWAYS. SOFT SPOT FOUND IN ANY AREA HAS TO BE REMOVED AND REPLACED BY SUITABLE MATERIALS SUCH AS CRUSHED ROCK OR SAND.

4.3 MAKE A HOLE AND PUT A NEW SET OF TIE BAR INTO IT. (REMOVE THE OLD SET)

4.4 THE NEW SET OF TIE BAR SHOULD BE PUT IN THE POSITION NEAR THE POSITION OF THE PREVIOUS SET.

4.5 POURING CONCRETE OVER THE PREPARED AREA. THE MATERIALS AND CONCRETE MIXING AS WELL AS CONSTRUCTION TECHNIQUES AND BROOMING SHALL BE IN ACCORDANCE WITH THE STANDARD DH–S 309/2544 REGARDING "REGULATIONS OF CONSTRUCTION CONTROL OF PORTLAND CEMENT CONCRETE PAVEMENT" REQUIRE NECESSARILY FOR CONCRETE MIXING AS:

- PORTLAND CEMENT 350 KG./M^3
- WATER/CEMENT RATIO 0.55 BY WEIGHT
- CONCRETE SLUMP 30–70 MM

CONCRETE SHALL HAVE A MINIMUM ULTIMATE COMPRESSIVE STRENGTH OF 32 MPa (325 KG/CM^2) FOR 150x150x150 MM. CUBE AT 28 DAYS

4.6 JOINTS SHALL BE CUT WITHIN THE SUITABLE TIME (APPROXIMATELY 4 – 12 HOURS AFTER CONCRETE POURING)

4.7 MASTIC JOINT SEALER SHALL BE DROPPED AS APPROVAL BY THE ENGINEER

NOTES:

1 . FOR THE CONCRETE SLAB WITH TRANSVERSE AND LONGITUDINAL SINGLE CRACKS, THE ELEVATION OF THE CONCRETE SLAB IN THE CRACK POSITION NEEDS TO BE CHECKED. IN CASE OF SETTLEMENT OR PAVEMENT STRUCTURES DAMAGE WHICH CAN CAUSE, CRACKS AND WHICH WILL NOT BE REPAIRED BY METHOD (2), THE METHOD (4) SHALL BE BROUGHT TO CONSIDERATION.

2. TRANSVERSE AND LONGITUDINAL SINGLE CRACKS ON CONCRETE SLABS, AFTER REPAIRING BY USING EPOXY, SHOULD BE CONSIDERED TO COMPRESS SLURRY CEMENT MORTAR INTO THE UNDERNEATH OF THE SLABS.

REF.	REVISION	SIGNATURE	DATE
A	Former Dwg.No. TS–401 and TS–402 with general revision and added 28 cm Slab thk.		2013

KINGDOM OF THAILAND

MINISTRY OF TRANSPORT

DEPARTMENT OF HIGHWAYS

STANDARD DRAWING

CONCRETE PAVEMENT REPAIRING

DESIGNED : D.O.H. & CONSULTANTS	**CHECKED :** BUREAU OF LOCATION & DESIGN	**DATE :** OCT 2015
SUBMITTED : (DIRECTOR OF LOCATION & DESIGN BUREAU)		**SCALE :** AS SHOWN
APPROVED : (FOR DIRECTOR GENERAL)		**DWG NO.** GD–608
		SHEET NO. 40

D:\std dwg 2015\GD-608(REV00)

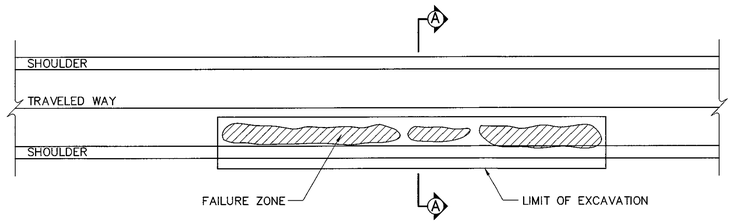

PLAN

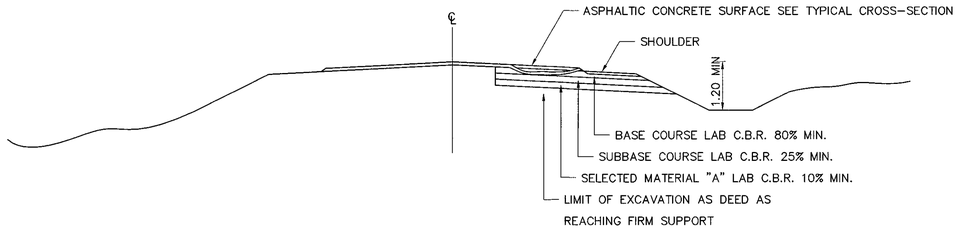

SECTION A – A

PAVEMENT REPAIR FOR FAILURE SETTLEMENT OR UPHEAVAL ZONE
NOT TO SCALE

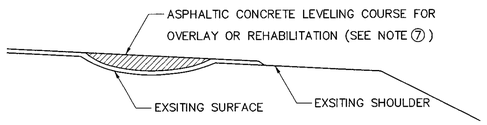

LONGITUDINAL DEPRESSION

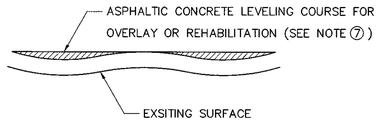

CORRUGATION

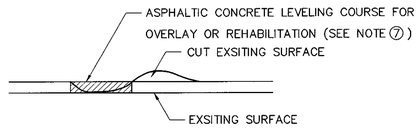

SHOVING

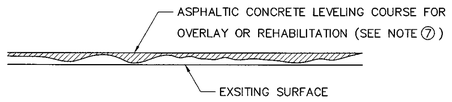

RAVELING

PAVEMENT PATCHING FOR DEPRESSION CORRUGATION, SHOVING AND RAVELING
NOT TO SCALE

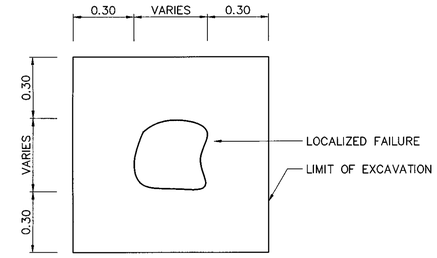

PLAN

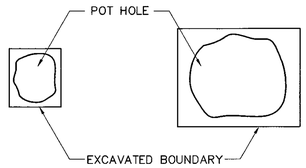

PLAN

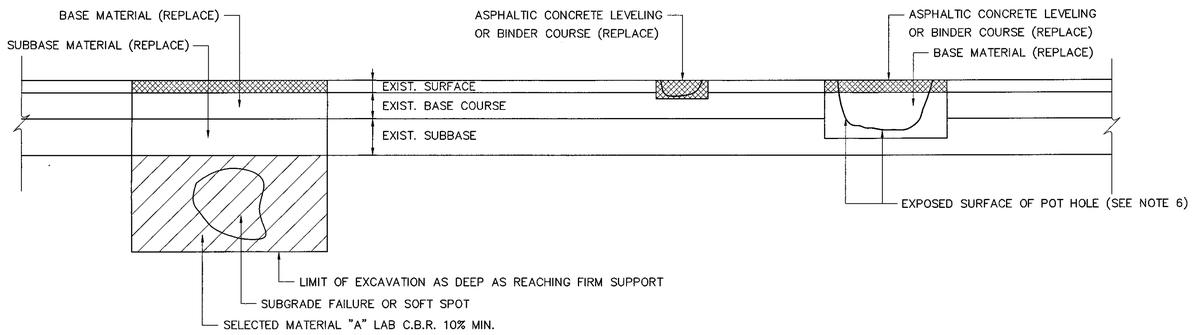

SECTION OF LOCALIZED FAILURE

SECTION OF POT HOLE

PAVEMENT REPAIR FOR LOCALIZED FAILURE AND POT HOLE
NOT TO SCALE

NOTES:

1. FOR CONTINUOUS FAILURE SECTIONS AND LOCALIZED FAILURE, FAILURE ZONES SHALL BE EXCAVATED TO THE UNDETERIORATED LAYER UNSUITABLE MATERIAL OR SOFT SPOT SHALL BE REMOVED TO THE SATISFACTION OF THE ENGINEER.
2. A SOFT SPOT IN THE EXISTING ROAD CAN BE VISUALLY DETERMINED BY THE MOVEMENT OF THE PAVEMENT UNDER PROOF ROLLING.
3. THE RECONSTRUCTION OF PAVEMENT STRUCTURE SHALL BE DONE LAYER BY LAYER TO THE REQUIRED THICKNESS. SUITABLE MATERIALS MAY BE REUSED. ALL MATERIALS SHALL BE IN ACCORDANCE WITH THE DRAWING AND THE SPECIFICATION.
4. BENCHING INTO SIDE SLOPES SHALL BE DONE WITH CARE IN ORDER TO PREVENT THE EXISTING PAVEMENT FROM COLLAPSING UNDER TRAFFIC CONDITIONS.
5. THE NEED FOR SIDE DITCHS FOR PAVEMENT SUBSURFACE DRAINAGE SHALL BE VERIFIED BY THE ENGINEER AND EXCAVATION SHALL COMMENCE AS EARLY IN THE CONTRACT AS POSSIBLE TO REDUCE THE EXCESS WATER CONTENT FROM THE ROAD STRUCTURE.
6. FOR POT HOLES, THE HOLES SHALL BE SQUARED, DRESSED AND DATCHED AS SHOWN USING GOOD FIELD PRACTICE AND IN ACCORDANCE WITH THE SPECIFICATIONS.
7. FOR LONGITUDINAL DEPRESSION, CORRUGATION, SHOVING AND PITTING, THE EXISTING SURFACE SHALL BE THOROUGHLY CLEANED AND LOOSE GRAVEL SHALL BE REMOVED. HUMPS IN THE EXISTING SURFACE SHALL BE CUT TO THE ADJACENT SURFACE LEVEL PRIOR TO OVERLAY OR REHABILITATION.
8. TACK COAT APPLIED TO PAVEMENT CRACKS OR PITTING AREA SHALL BE ADJUSTED HIGHER APPLICATION RATES IF DIRECTED BY THE ENGINEER.
9. BLEEDING SURFACE SHALL BE REMOVED AS APPLICABLE OR SEALED WITH ASPHALTIC CONCRETE LEVELING OR BINDER COURSE. THE ASPHALT CONTENT SHALL BE KEPT AT A SUITABLE RATE AS APPROVED BY PROJECT ENGINEER.
10. TRAFFIC SIGN, BARRICADES, LIGHTS, ETC. SHALL BE PROVIDED AT EACH UNCOMPLETED REPAIR SECTIONS FOR SAFTY MEASURES.
11. METHOD OF PAVEMENT REPARING SHALL BE ACCORDING TO ROAD MAINTENANCE MANNUAL.

REPAIR OF CRACKS

1. ALLIGATOR CRACKS ARE NORMALLY CAUSED BY EXCESSIVE DEFLECTION OF THE SURFACE OVER UNSTABLE LOWER COURSES OF THE PAVEMENT. ALLIGATOR CRACKS SHOULD THEN BE TREATED AND REPAIRED AS LOCALIZED FAILURE.
2. REFLECTION CRACKS AND SHRINKAGE CRACKS SHALL BE SEALED BY EITHER TACK COAT OF A HIGHER APPLICATION RATES OR ASPHALTIC SLURRY SEAL AS DIRECTED BY THE ENGINEER.
3. SLIPPAGE CRACKS ARE CAUSED BY THE LACK OF A GOOD BOND BETWEEN THE SURFACE LAYER AND THE COURSE BENEATH. REMOVE THE SLIPPING AREA, CLEAN THE SURFACE OF THE EXPOSED UNDERLYING LAYER AND APPLY A SUITABLE APPLICATION RATE OF TACK COAT AS DIRECTED BY THE ENGINEER.

KINGDOM OF THAILAND

MINISTRY OF TRANSPORT
DEPARTMENT OF HIGHWAYS

STANDARD DRAWING

TYPICAL SURFACE OVERLAY AND REPAIRING

DESIGNED : D.O.H. & CONSULTANTS	**CHECKED :** BUREAU OF LOCATION & DESIGN		**DATE :** OCT 2015
SUBMITTED : (DIRECTOR OF LOCATION & DESIGN BUREAU)			**SCALE :** AS SHOWN
APPROVED : (FOR DIRECTOR GENERAL)			**DWG NO.** GD–701
			SHEET NO. 41

REF.	REVISION	SIGNATURE	DATE

D:\std dwg 2015\GD-701(REV00)

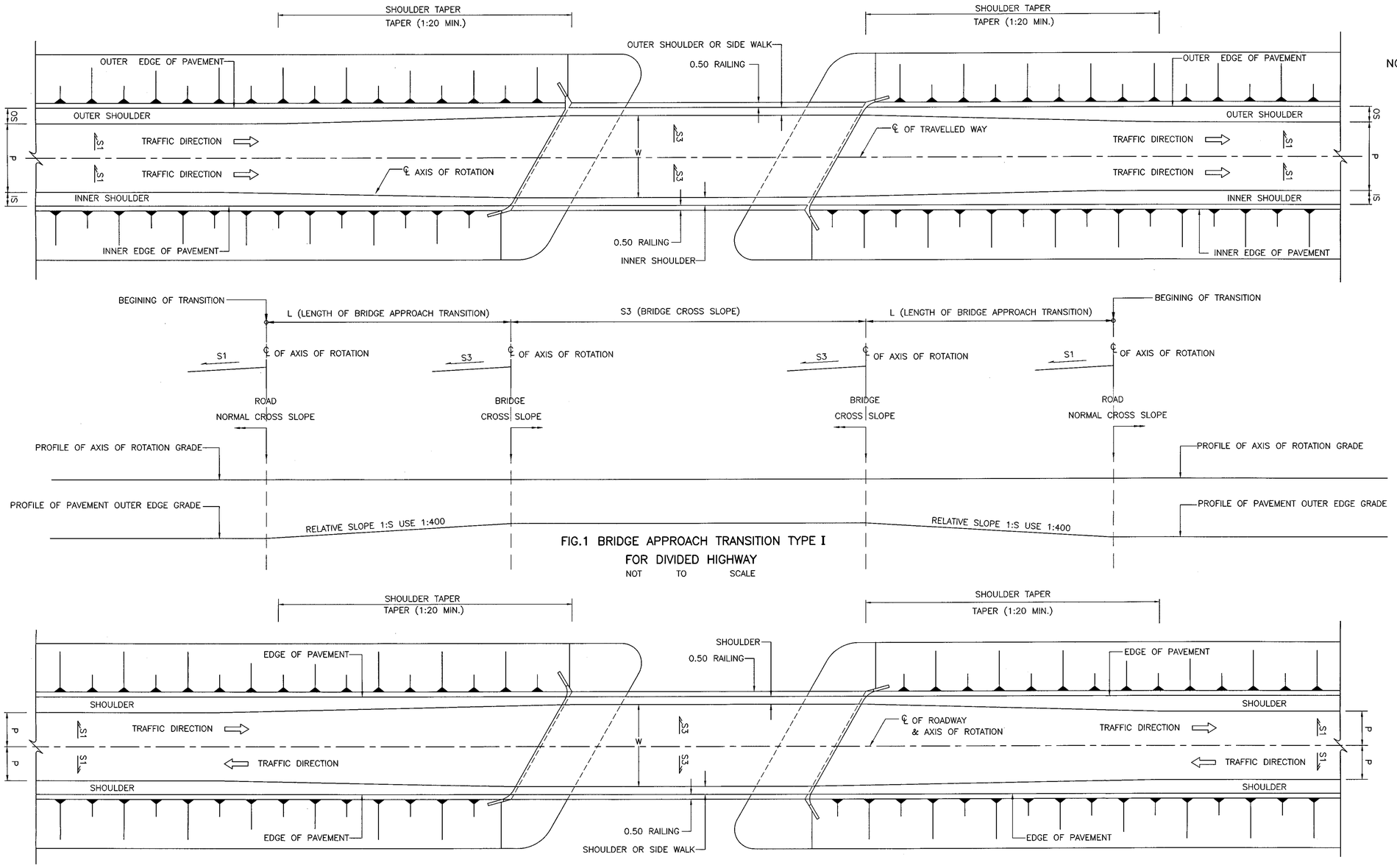

FIG.1 BRIDGE APPROACH TRANSITION TYPE I
FOR DIVIDED HIGHWAY
NOT TO SCALE

FIG.2 BRIDGE APPROACH TRANSITION TYPE II
FOR UNDEVIDED HIGHWAY
NOT TO SCALE

NOTES

1. ALL DIMENSIONS ARE IN METERS UNLESS OTHERWISE INDICATED.
2. LENGTH OF BRIDGE APPROACH TRANSITION SHALL BE DETERMINE AS FOLLOWING EQUATION ;

$$L = \frac{(S1-S3)}{100} \times (P+OS) \times 400$$

WHERE ;

- L = LENGTH OF BRIDGE APRROACH TRANSITION ,M.
- P = WIDTH OF TRAVELLED WAY ,M.
- OS = WIDTH OF OUTER SHOULDER OR SHOULDER ,M.
- IS = INNER SHOULDER OF ROADWAY.
- S1 = NORMAL CROSS SLOPE OR NORMAL CROWN SLOPE OF ROADWAY ,%
- S3 = BRIDGE CROSS SLOPE ,%
- 1:S = RELATIVE SLOPE (USE 1:400)
- W = BRIDGE WIDTH

REF.	REVISION	SIGNATURE	DATE

KINGDOM OF THAILAND

MINISTRY OF TRANSPORT
DEPARTMENT OF HIGHWAYS

STANDARD DRAWING

BRIDGE APPROACH TRANSITION

DESIGNED : D.O.H. & CONSULTANTS	CHECKED : BUREAU OF LOCATION & DESIGN	DATE : OCT 2015
SUBMITTED : (DIRECTOR OF LOCATION & DESIGN BUREAU)		SCALE : AS SHOWN
APPROVED : (FOR DIRECTOR GENERAL)		DWG NO. GD-702
		SHEET NO. 42

D:\std dwg 2015\GD-702(REV00)

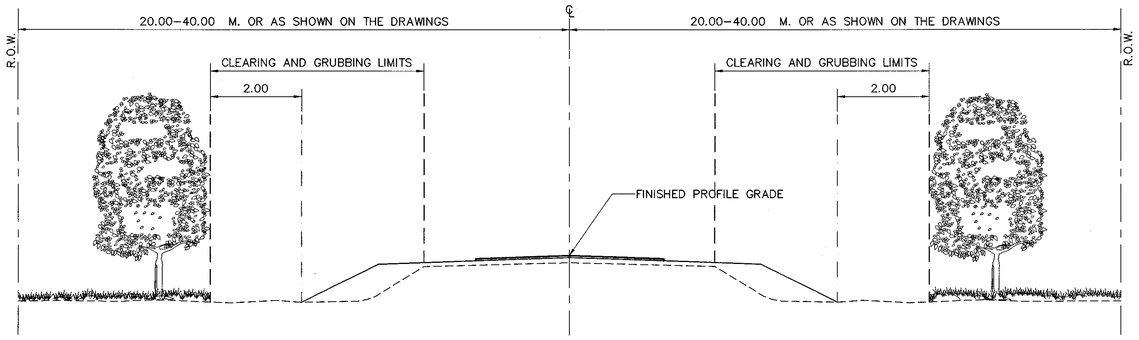

CLEARING AND GRUBBING FOR REHABILITATION OR RECONSTRUCTION PROJECT

NOT TO SCALE

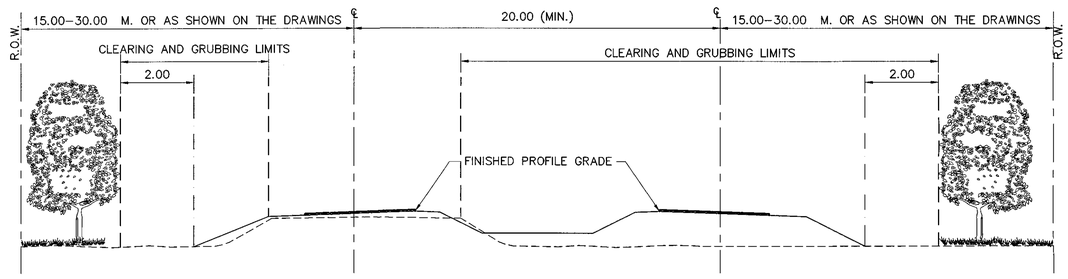

CLEARING AND GRUBBING FOR REHABILITATION (OR RECONSTRUCTION) AND CONSTRUCTION PROJECT

NOT TO SCALE

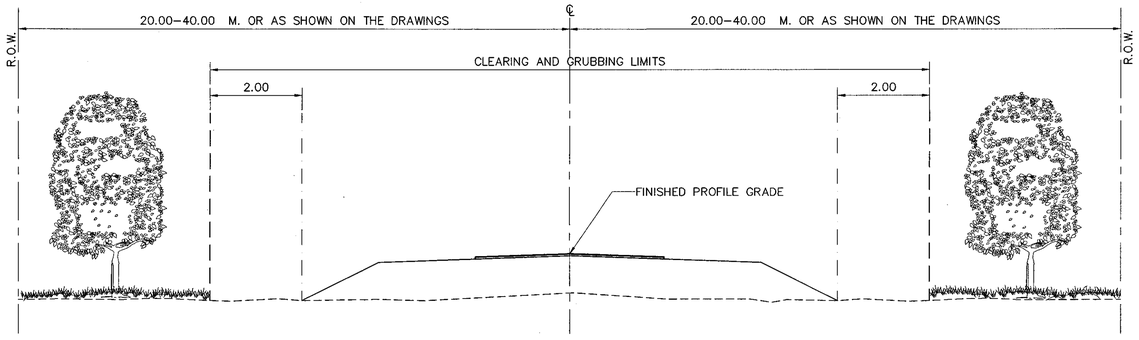

CLEARING AND GRUBBING FOR CONSTRUCTION PROJECT

NOT TO SCALE

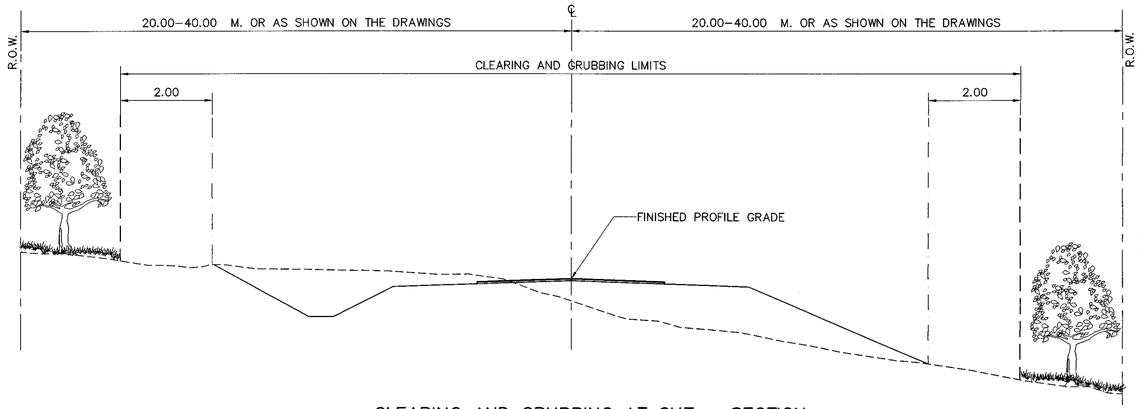

CLEARING AND GRUBBING AT CUT – SECTION

NOT TO SCALE

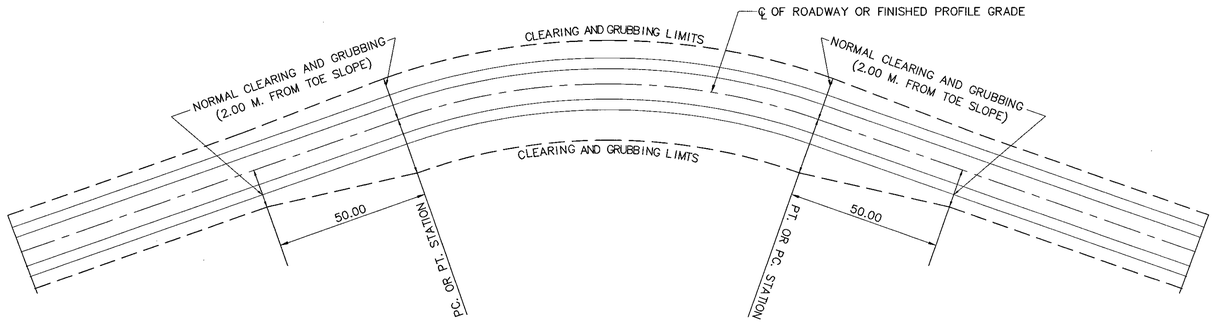

CLEARING AND GRUBBING AT HORIZONTAL CURVE

NOT TO SCALE

NOTES :

1. ALL DIMENSIONS ARE IN METERS UNLESS OTHERWISE INDICATED.
2. AT LOCATIONS WHERE OVERHANGING TREE BRANCHES, SHRUBS, BUSHES,ETC.SPREAD OVER CLEARING AND GRUBBING AREAS, THEY SHALL BE CUT TO PROVIDE A 3.50 M. CLEARANCE OVER FINISHED PROFILE GRADE.
3. SIDE DITCHES,CUT AND FILL SLOPES DIMENSION SHALL CONFORM TO THE TYPICAL CROSS–SECTION DRAWING.
4. CLEARING AND GRUBBING IN RESIDENTAL AREAS SHALL CONFORM TO THE DRAWING FOR THAT PARTICULAR PROJECT OR AS DIRECTED BY THE ENGINEER.

KINGDOM OF THAILAND

MINISTRY OF TRANSPORT

DEPARTMENT OF HIGHWAYS

STANDARD DRAWING

CLEARING AND GRUBBING

REF.	REVISION	SIGNATURE	DATE

DESIGNED : D.O.H. & CONSULTANTS	CHECKED : BUREAU OF LOCATION & DESIGN	DATE : OCT 2015
SUBMITTED : (DIRECTOR OF LOCATION & DESIGN BUREAU)		SCALE : AS SHOWN
APPROVED : (FOR DIRECTOR GENERAL)		DWG NO. GD–703
		SHEET NO. 43

D:\std dwg 2015\GD-703(REV00)

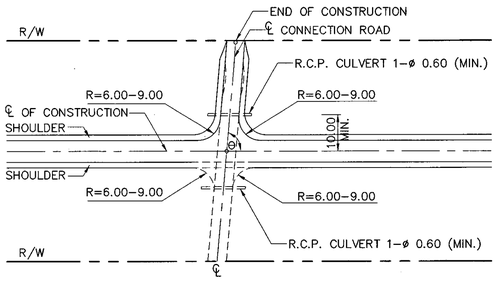

CONNECTION ROAD, θ BETWEEN 80°–90°

NOT TO SCALE

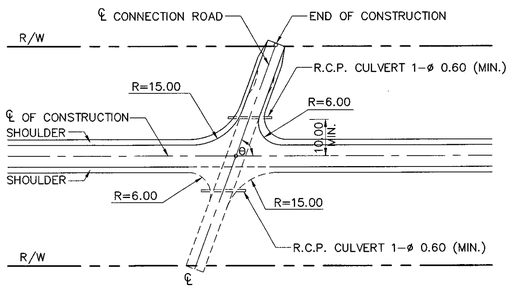

CONNECTION ROAD, θ BETWEEN 60°–80°

NOT TO SCALE

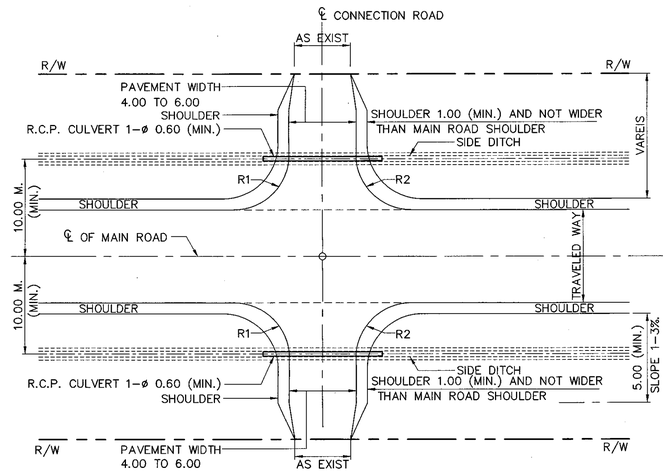

CONNECTION ROAD PLAN

NOT TO SCALE

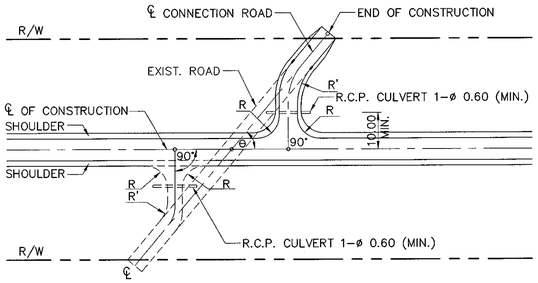

RIGHT OF WAY WIDTH ⩾ 20.00M.(NOT EXCEED 30.00 M.) : R=6.00 M. R'=8.00 M.,
RIGHT OF WAY WIDTH > 30.00 M. : R=6.00M.(MIN.) R'=15.00 M.(MIN.)

CONNECTION ROAD, θ BETWEEN 45°–60°

NOT TO SCALE

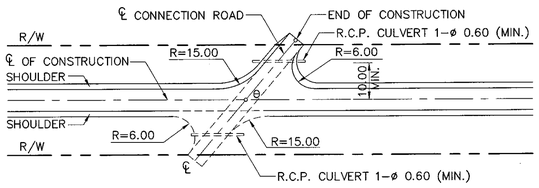

RIGHT OF WAY WIDTH ⩽ 20.00 M.

CONNECTION ROAD, θ BETWEEN 45°–60°

NOT TO SCALE

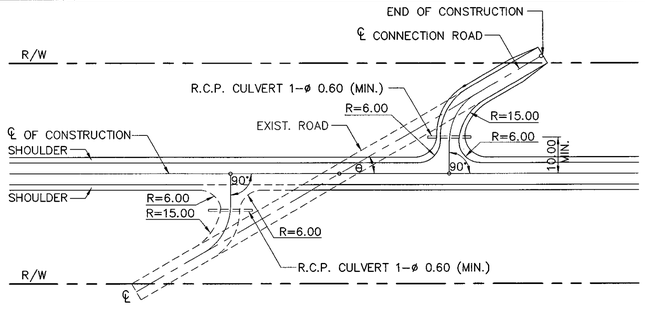

RIGHT OF WAY WIDTH > 20.00 M.

CONNECTION ROAD, θ LESS THAN 45°

NOT TO SCALE

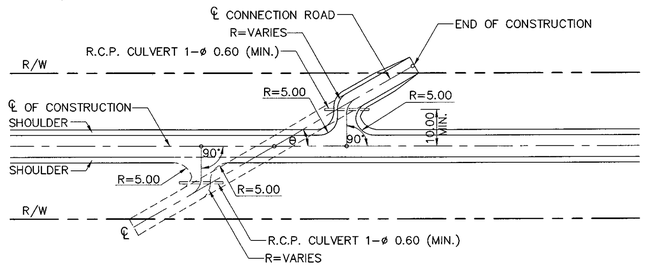

RIGHT OF WAY WIDTH ⩽ 20.00 M.

CONNECTION ROAD, θ LESS THAN 45°

NOT TO SCALE

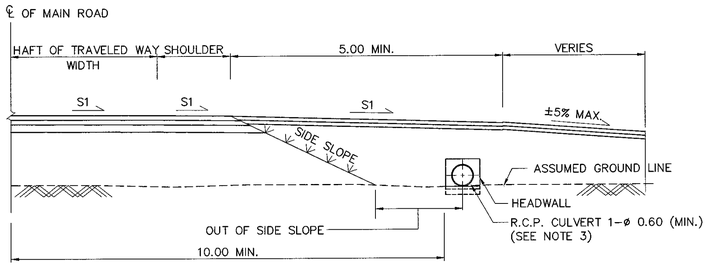

CONNECTION ROAD SECTION

NOT TO SCALE

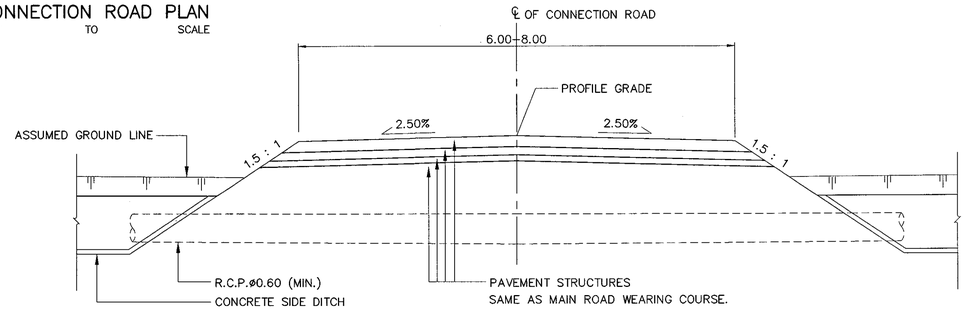

TYPICAL CROSS–SECTION FOR CONNECTION ROAD

SCALE 1 : 100

NOTES :

1. ALL DIMENSIONS ARE IN METERS UNLESS OTHERWISE INDICATED.
2. THIS DRAWING SHALL BE USED IN ACCORDANCE WITH DOH. PERMISSION MANUAL FOR THE CONNECTION ROAD AND BUILDING CONSTRUCTION AT ADJACENT R.O.W..
3. SIZE AND NUMBER OF PIPE AS SHOWN ON THIS DRAWING IS GUIDANCE ONLY. FURTHERMORE , LOCATION AND LENGTH OF PIPE MAY BE ADJUSTED AS DIRECTED BY THE ENGINEER IN THE FIELD DURING CONSTRUCTION.
4. THE LIMIT OF THE CONNECTION ROAD CONSTRUCTION SHALL BE ENDED AT R.O.W OR AS SHOWN ON THE DRAWING.
5. THE WIDTH OF THE CONNECTION ROAD AS SHOWN ON THIS DRAWING IS GENERAL GUIDANCE IN CASE OF THE DETAIL OF THE CONNECTION ROAD ON THE CONSTRUCTION DRAWING IS UNAVAILABLE.THESE ROAD WIDTH SHALL BE THE SAME AS THE EXISTING PAVED CONNECTION ROAD OR AS DIRECTED BY THE ENGINEER IN THE FIELD BUT SHALL NOT BE WIDER THAN THE MAIN ROAD.
6. BEFORE THE CONNECTION ROAD CONSTRUCTION,THE ADJACENT SUBMITTED INTERSECTION PLAN SHALL BE APPROVED BY THE ENGINEER.
7. IN CASE OF SIDE ROAD CONNECT TO A SMALL VILLAGE WITH LOW TRAFFIC, THE MINIMUN OF THE CONNECTION ROAD WIDTH AS SHOWN ON THIS DRAWING IS APPROPRIATE.
8. S1 = NORMAL CROSS SLOPE OF THE MAIN ROAD AS SHOWN ON TYPICAL CROSS–SECTION.
   S2 = PROFILE GRADE OF THE CONNECTION ROAD
9. THIS DRAWING SHALL BE USED IN COMBINATION WITH DWG. NO. TS–203

REF.	REVISION	SIGNATURE	DATE

KINGDOM OF THAILAND

MINISTRY OF TRANSPORT

DEPARTMENT OF HIGHWAYS

STANDARD DRAWING

CONNECTION ROAD DETAILS

DESIGNED : D.O.H. & CONSULTANTS	**CHECKED :** BUREAU OF LOCATION & DESIGN	**DATE :** OCT 2015
SUBMITTED : (DIRECTOR OF LOCATION & DESIGN BUREAU)		**SCALE :** AS SHOWN
APPROVED : (FOR DIRECTOR GENERAL)		**DWG NO.** GD–704
		SHEET NO. 44

D:\std dwg 2015\GD-704(REV00)

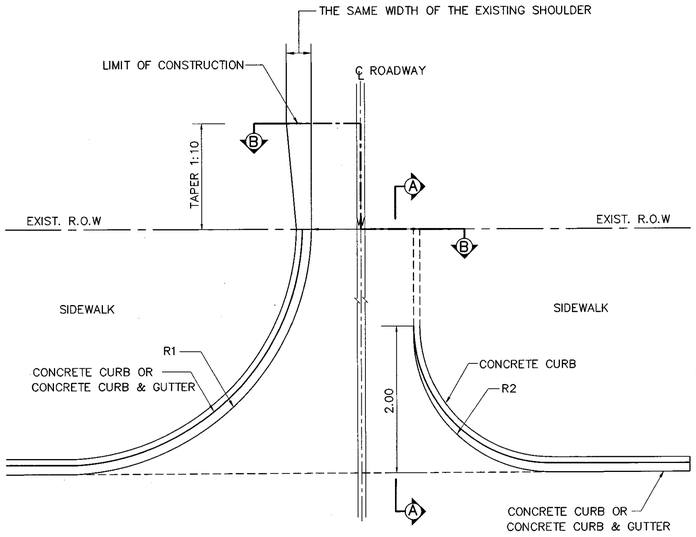

R1 = 5.00 M. – 9.00 M.
R2 = 2.50 M. – 3.50 M.
ACCORDING TO TRAFFIC VOLUME AND AVAILABLE SPACE OR AS INDICATED IN THE PLAN & PROFILE DRAWING

FIG. 1 PLAN OF PUBLIC SIDE ROAD & PRIVATE DRIVE AT SIDEWALK
NOT TO SCALE

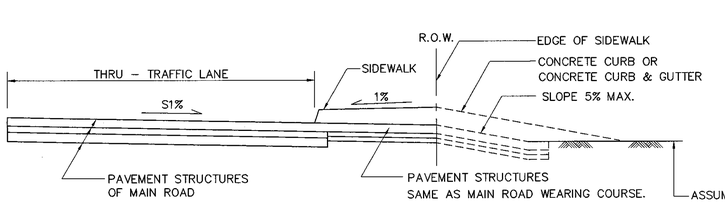

FIG.2 TYPICAL PUBLIC SIDE ROAD AT SIDEWALK (PROFILE)
NOT TO SCALE

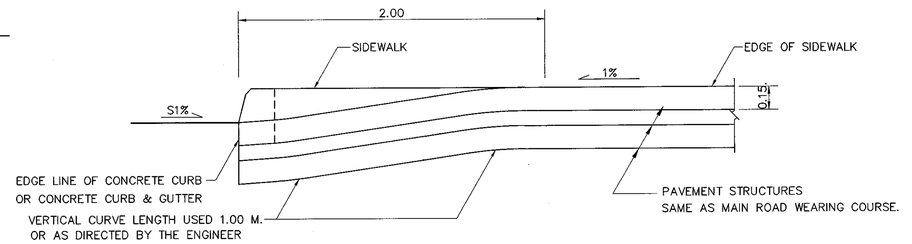

SECTION A – A

FIG.3 PAVEMENT OF PRIVATE DRIVE
NOT TO SCALE

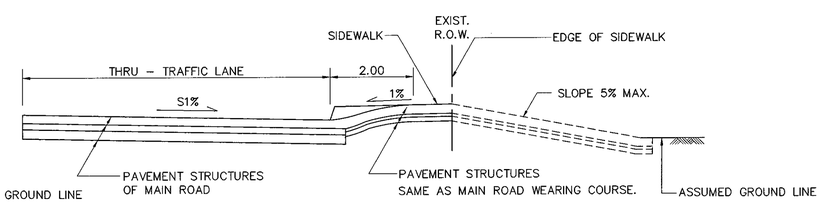

FIG.4 TYPICAL PRIVATE DRIVE AT SIDEWALK (PROFILE)
NOT TO SCALE

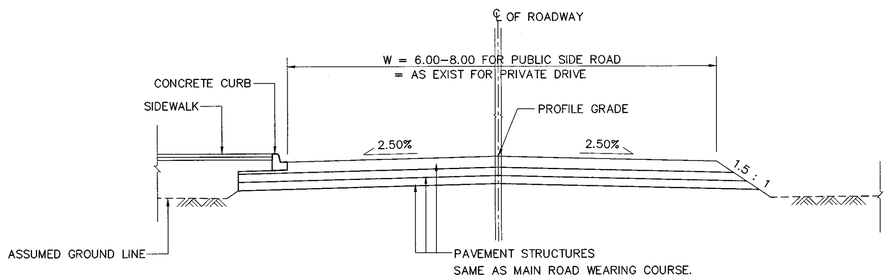

SECTION B – B

FIG.5 TYPICAL CROSS–SECTION FOR PUBLIC SIDE ROAD OR PRIVATE DRIVE
SCALE 1 : 100

CRITERIA AND LIMITS OF CONSTRUCTION

1. THE PROJECT ENGINEER SHALL LIST THE CONNECTION ROADS THAT NEED TO BE RECONSTRUCTED BEFORE THE PROJECT BEGINNING.
2. THE PAYMENT FOR CONSTRUCTION OF THE PUBLIC SIDE ROADS (FROM THE LIST OF ITEM.1) ARE AS FOLLOWS ;
   - 2.1 THE DRAINAGE STRUCTURE (EXTENDED OR NEW STRUCTURE)
   - 2.2 THE PAVEMENT STRUCTURE, THAT SHALL BE AS GOOD AS, OR BETTER THAN THE EXISTING PAVEMENT STRUCTURE.
3. THE PAYMENT FOR PRIVATE DRIVE (FROM THE LIST OF ITEM.1) ARE AS FOLLOWS ;
   - 3.1 IN CASE OF GETTING PERMISSION FROM THE DOH,
     - 3.1.1 THE DRAINAGE STRUCTURE (EXTENDED OR NEW STRUCTURE)
     - 3.1.2 FOR THE PAVEMENT STRUCTURE, DOH. SHALL CONSTRUCT THE TEMPORARY PAVEMENT DURING THE CONSTRUCTION OF THE HIGHWAY, WHEN THE PROJECT IS COMPLETED, THE OWNER OF EACH PRIVATE DRIVE SHALL PAY FOR THE PAVEMENT STRUCTURE FOR HIMSELF.
   - 3.2 IN CASE OF NOT GETTING PERMISSION FROM THE DOH.
     - 3.2.1 DOH. SHALL PAY FOR THE DRAINAGE STRUCTURE ONLY WHEN THE PRIVATE DRIVE INTERFERES WITH THE DRAINAGE SYSTEM OF THE HIGHWAY.
     - 3.2.2 ALL OF THE OWNERS OF THE PRIVATE DRIVE ARE REQUIRED TO SEEK THE PERMISSION FROM THE DOH, OTHERWISE, ILLEGAL PRIVAE DRIVES SHALL BE REMOVED ACCORDING TO THE ITEM 33 OF THE REVOLUTION ANNOUNCEMENT NO. 295
4. FOR THE NEW PRIVATE DRIVES ,THE OWNER SHALL ASK FOR THE PERMISSION FROM DOH. BEFORE THE BEGINNING OF THE CONSTRUCTION.
5. THE DOH., BY THE LOCATION AND DESIGN BUREAU SHALL DIRECT AS FOLLOWS ;
   - 5.1 THE ARRANGEMENT OF THE DRAINAGE STRUCTURE.
   - 5.2 THE LIMIT OF CONSTRUCTION CONNECTION ROADS.
   - 5.3 THE TYPE AND QUANTITIES OF PAVEMENT STRUCTURE.

NOTES :

1. ALL DIMENSION ARE IN METERS UNLESS OTHERWISE INDICATED.
2. IN GENERAL, PUBLIC SIDE ROAD CONNECTS THE HIGHWAY TO THE VILLAGE, POPULATED AREA, MONASTERY, GOVERNMENT OFFICE ,PUBLIC UTILITY OR SOME IMPORTANT PLACES OF IMPORTANCE WHILE THE "PRIVATE DRIVE" IS THE PRIVATE CONNECTION ROAD FOR PRIVATE HOUSE.
3. S1 = NORMAL CROSS SLOPE OF THE MAIN ROAD, AS SHOWN ON TYPICAL CROSS–SECTION
4. THIS DRAWING SHALL BE USED IN COMBINATION WITH DWG. NO. TS–203
5. THIS DRAWING SHALL BE USED IN ACCORDANCE WITH DOH. PERMISSION MANUAL FOR THE CONNECTION ROAD AND BUILDING CONSTRUCTION AT ADJACENT R.O.W..

REF.	REVISION	SIGNATURE	DATE

KINGDOM OF THAILAND

MINISTRY OF TRANSPORT
DEPARTMENT OF HIGHWAYS

STANDARD DRAWING

SIDE ROAD & PRIVATE DRIVE DETAILS

DESIGNED : D.O.H. & CONSULTANTS	**CHECKED :** BUREAU OF LOCATION & DESIGN	**DATE :** OCT 2015
SUBMITTED : (DIRECTOR OF LOCATION & DESIGN BUREAU)		**SCALE :** AS SHOWN
APPROVED : (FOR DIRECTOR GENERAL)		**DWG NO.** GD–705
		SHEET NO. 45

D:\std dwg 2015\GD-705(REV00)

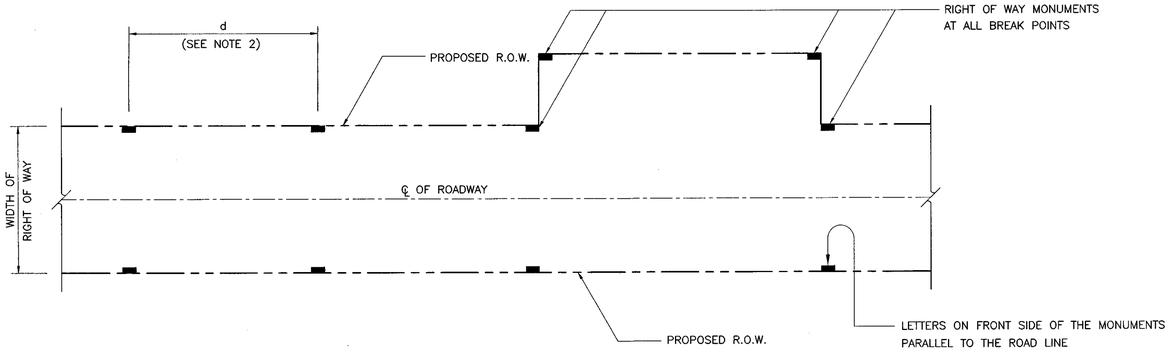

R.O.W. MONUMENT IN STRAIGHT LINE
NOT TO SCALE

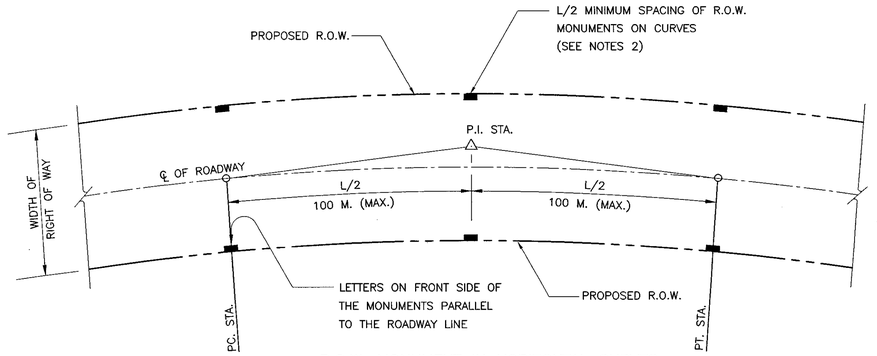

R.O.W. MONUMENT IN HORIZONTAL CURVES
NOT TO SCALE

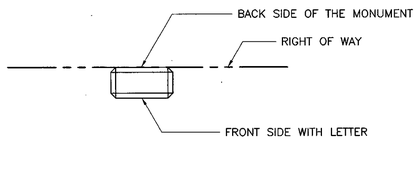

PLAN
NOT TO SCALE

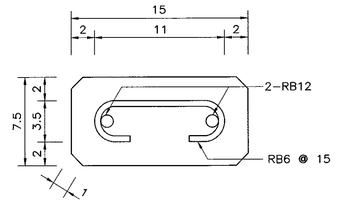

SECTION Ⓐ
NOT TO SCALE

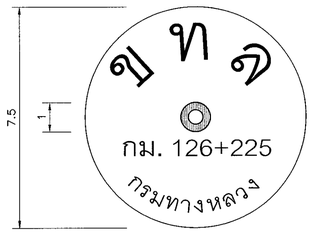

PLAN
NOT TO SCALE

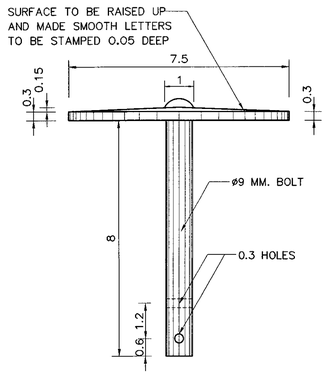

SIDE VIEW
NOT TO SCALE

DETAIL 1 : BRASS TABLET

NOTES :

1. ALL DIMENSIONS ARE IN CENTIMETERS UNLESS OTHERWISE INDICATED.
2. LOCATION OF R.O.W. MONUMENTS SHALL BE AS SHOWN ON THE PLAN AND SHALL BE SPECIFIED AS FOLLOWS :
   a) RURAL AREA (RICE FIELD, WOOD, ETC.) d = 100 M.
   b) URBAN AREA (TOWNS AND VILLAGES) d = 25 M.
   c) AT ALL BREAK POINTS OF R.O.W.
   d) AT PC. , PT. AND MIDDLE POINT OF HORIZONTAL CURVE
3. THE CONTRACTOR SHALL BE SUBMITTED THE SIZE OF LETTERS FOR THE ENGINEER APPROVAL PRIOR CONSTRUCTION.
4. GENERAL SPECIFICATION OF R.O.W. MONUMENT TYPE A IS SUGGESTED AS FOLLOWS:
   4.1 PAINTING OF R.O.W. POSTS.
      a) POSTS, WHITE
      b) LETTERS, BLACK
   4.2 BLACK AND WHITE PAINTS MUST BE GLOSS ENAMEL PAINTS IN ACCORDANCE WITH SPECIFICATION AND SHALL BE APPLIED IN 2 LAYERS.
   4.3 POSTS SHALL BE ERECTED TRULY VERTICAL.
   4.4 CONCRETE SHALL HAVE A MINIMUM ULTIMATE COMPRESSIVE STRENGTH OF 20 Mpa.(200 KSC.) FOR 15x15x15 CM. CUBE AT 28 DAYS
   4.5 REBARS SHALL BE PLAIN BARS AND CONFORM TO TIS.20 GRADE SR24
   4.6 SIZES OF LETTERS AND FIGURES SHALL BE IN ACCORDANCE WITH DOH' TRAFFIC CONTROL MANUAL.
   4.7 LETTERS ARE DEPRESSED 1 CM. INTO THE CONCRETE.
   4.8 CLEAR CONCRETE COVER SHALL BE 2.5 CM.
5. BRASS TABLET R.O.W. MONUMENT SHALL BE MADE OF BRASS WHICH CONFORM TO THE REQUIREMENT OF JIS H3250 C3604.
6. GENERAL SPECIFICATION OF R.O.W. MONUMENT TYPE C IS SUGGESTED AS FOLLOWS:
   6.1 THE BRASS TABLET SHALL BE ANCHORED WHICH IN THE CENTER OF R.C.CYLINDER.
   6.2 THE R.C. CYLINDER SHALL BE TIGHTLY BURIED IN THE NATURAL GROUND.
   6.3 CONCRETE SHALL HAVE A MINIMUM ULTIMATE COMPRESSIVE STRENGTH OF 20 Mpa.(200 KSC.) FOR 15x15x15 CM. CUBE AT 28 DAYS
   6.4 REBARS SHALL BE PLAIN BARS AND CONFORM TO TIS.20 GRADE SR24
7. CRITERIA OF CONSIDERATION FOR ALTERNATIVE TYPE CONSTRUCTION AS FOLLOWS ;
   7.1 TYPE A RECOMMEND FOR GENERAL HIGHWAY IN RURAL.
   7.2 TYPE B RECOMMEND FOR VILLAGE SECTION OR URBAN SECTION WITH PERMANENT STRUCTURE AT R.O.W. LINE.
   7.3 TYPE C RECOMMEND FOR VILLAGE SECTION OR URBAN SECTION WITHOUT PERMANENT STRUCTURE AT R.O.W. LINE.

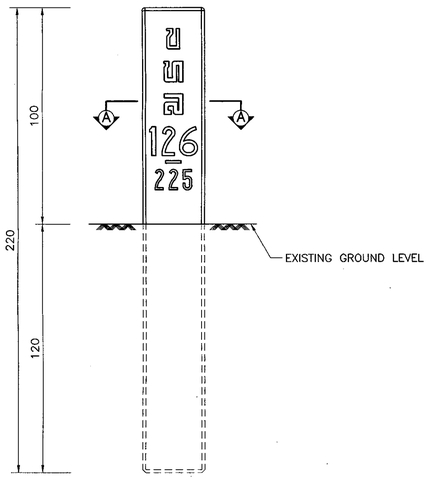

FRONT ELEVATION
NOT TO SCALE

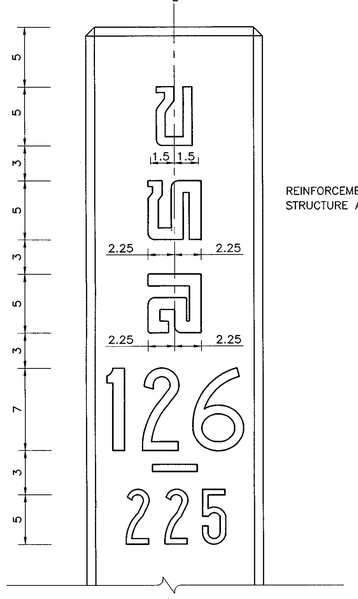

STANDARD LETTERS & FIGURES
NOT TO SCALE

RIGHT OF WAY MONUMENT TYPE A
R.C. CONCRETE POST
(SEE NOTE 7)

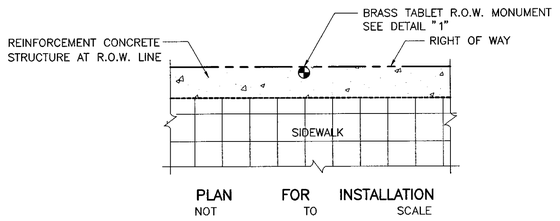

PLAN FOR INSTALLATION
NOT TO SCALE

RIGHT OF WAY MONUMENT TYPE B
BRASS TABLET INSTALLED ON THE R.C. STRUCTURE
(SEE NOTE 7)

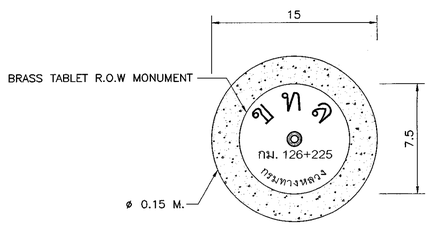

PLAN
NOT TO SCALE

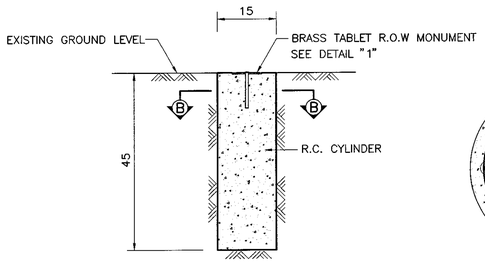

SIDE VIEW
NOT TO SCALE

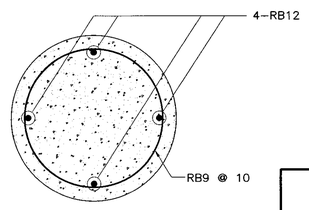

SECTION Ⓑ
NOT TO SCALE

RIGHT OF WAY MONUMENT TYPE C
BRASS TABLET INSTALLED ON THE R.C. CYLINDER
(SEE NOTE 7)

KINGDOM OF THAILAND

MINISTRY OF TRANSPORT
DEPARTMENT OF HIGHWAYS

STANDARD DRAWING

RIGTH OF WAY MONUMENT

DESIGNED : D.O.H. & CONSULTANTS	CHECKED : BUREAU OF LOCATION & DESIGN	DATE : OCT 2015	
SUBMITTED : (DIRECTOR OF LOCATION & DESIGN BUREAU)		SCALE : AS SHOWN	
APPROVED : (FOR DIRECTOR GENERAL)		DWG NO. GD–706	
		SHEET NO. 46	

REF.	REVISION	SIGNATURE	DATE

D:\std dwg 2015\GD-706(REV00)

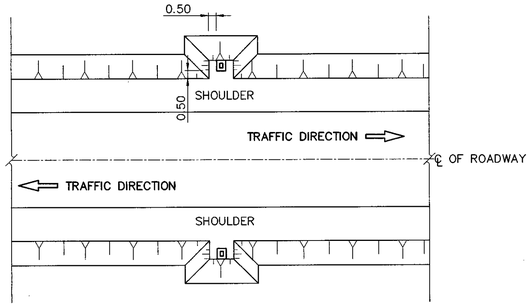

INSTALLATION PLAN
FOR TWO – LANE HIGHWAY

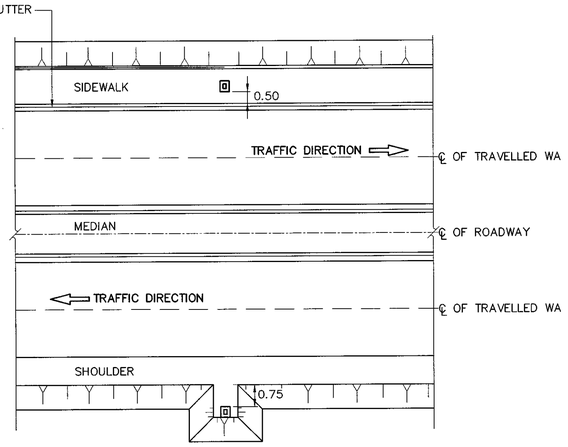

INSTALLATION PLAN
FOR DIVIDED HIGHWAY

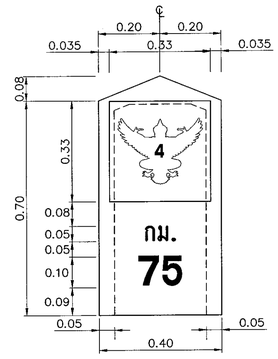

FRONT VIEW

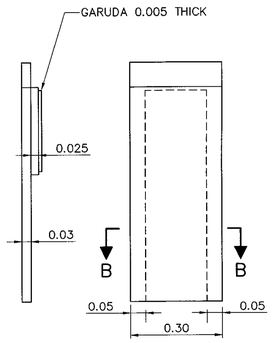

SIDE VIEW

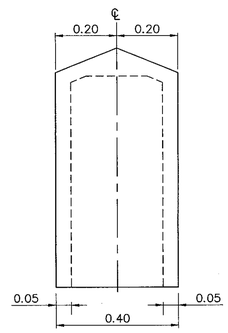

BACK VIEW

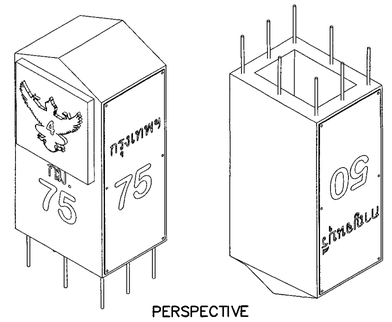

PERSPECTIVE

KILOMATER STONE DETAILS
SCALE 1 : 10

PLAN FOR INSTALLATION
NOT TO SCALE

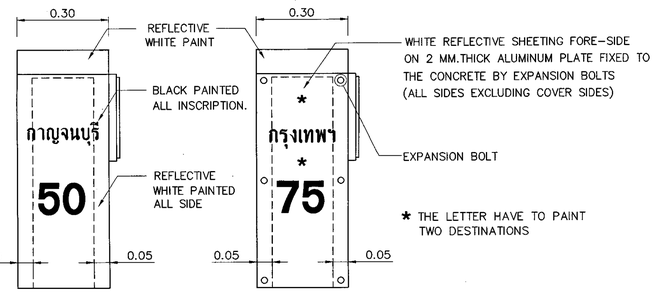

TYPE I : PAINTED FACING TYPE II : REFLECTIVE SHEET FACING

ALTERNATIVE TYPE OF KILOMETER STONE
SCALE 1 : 10

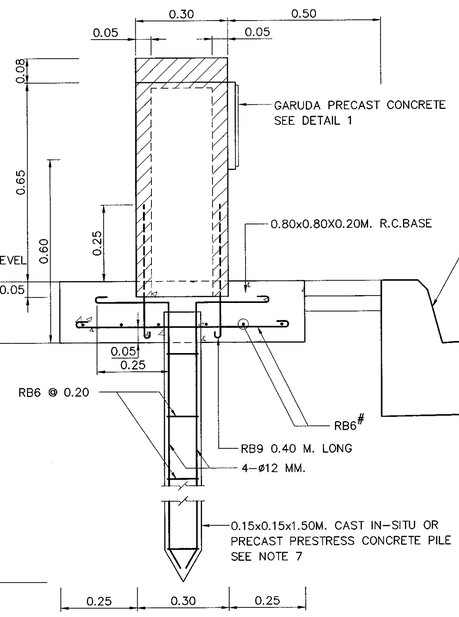

GENERAL DETAIL OF INSTALLATION AT SIDEWALK

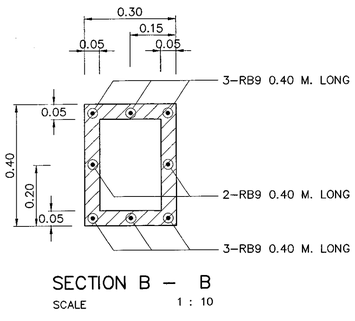

SECTION B – B
SCALE 1 : 10

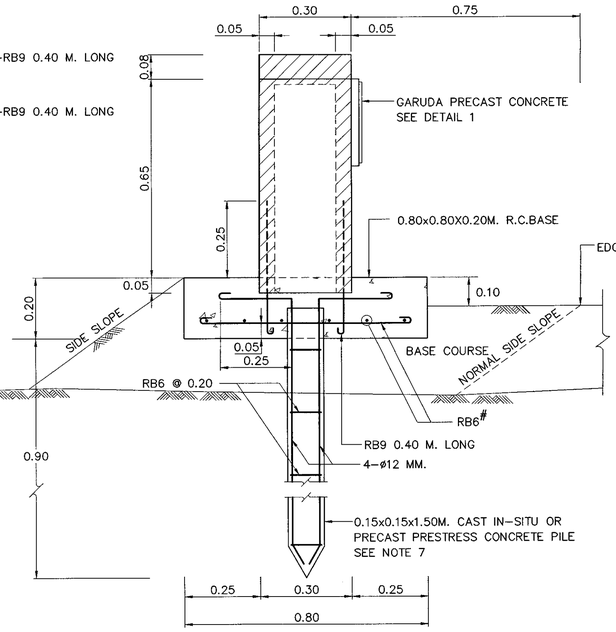

GENERAL DETAIL OF INSTALLATION BESIDE EDGE OF SHOULDER

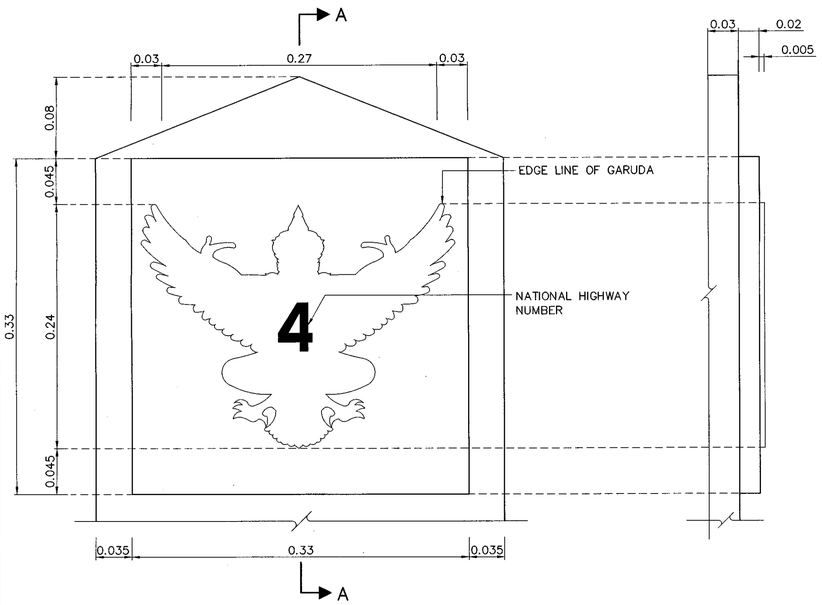

ELEVATION OF GARUDA

SIDE VIEW OF GARUDA

DETAIL 1
SCALE 1 : 3

SECTION A – A
SCALE 1 : 10

NOTES :

1. DIMENSIONS ARE IN METERS UNLESS OTHERWISE INDICATED.
2. WHERE PENETRATION CANNOT BE ACHIEVED FOR PILING THE KILOMETER POST MAY BE ERECTED WITHOUT PILING WHEN APPROVED BY THE ENGINEER.
3. ALL INSCRIPTIONS SHOWN ON THIS DRAWING ARE SET UP FOR EXAMPLE PURPOSES ONLY.
4. THE KILOMETER POST SHALL BE PLACED AT 1 KILOMETER INTERVAL AT 0.75 M. FORM EDGE OF OUTER SHOULDER OR AT 0.50 M. FORM CURB.
5. CONCRETE SHALL HAVE A MINIMUM ULTIMATE COMPRESSIVE STRENGTH OF 20 MPa.(200 KSC.) FOR 15X15X15 CM. CUBE AT 28 DAYS.
6. REINFORCING STEEL SHALL CONFORM TO TIS.20 GRADE SR.24.
7. PRE – CAST PRESTRESS CONCRETE PILE SHALL CONFORM TO TIS.396
8. DESCRIPTIONS OF THE ALTERNATIVE TYPE OF KILOMETER STONE AS FOLLOWS ;
   - 8.1 TYPE I ,PAINTED FACING : ALL KILOMETER STONE FACINGS SHALL PAINTED WITH WHITE PAINT. AND INSCRIPTIONS SHALL PAINTED BLACK PAINT.
   - 8.2 TYPE II ,REFLECTIVE SHEET FACING : ALL KILOMETER STONE FACINGS SHALL PAINTED WITH WHITE PAINT AND INSCRIPTIONS SHALL PAINTED BLACK PAINT.
9. ALL FACES OF TYPE I KILOMETER AND COVER FACES OF TYPE II KILOMETER SHALL BE PAINTED WHITE. AND ALL INSCRIPTIONS SHALL PAINT BLACK OTHERWISE THE GARUDA FRAME SHALL PAINT IN GREY LINE 1 CENTIMETER WIDTH.
10. THE PAINTS SHALL CONFORM TO TIS.327 AND SHALL APPLIED ON ALL FACE IN 2 LAYERS.
11. REFLECTIVE SHEETING FOR TYPE II KILOMETER FACING SHALL CONFORM TO TIS.606 TYPE I (ESEFFICIENT OF RETRO–REFLECTION LEVEL 1)

REF.	REVISION	SIGNATURE	DATE

KINGDOM OF THAILAND

MINISTRY OF TRANSPORT
DEPARTMENT OF HIGHWAYS

STANDARD DRAWING

KILOMETER MARKER
KILOMETER STONE

DESIGNED : D.O.H. & CONSULTANTS	CHECKED : BUREAU OF LOCATION & DESIGN	DATE : OCT 2015
SUBMITTED : (DIRECTOR OF LOCATION & DESIGN BUREAU)		SCALE : AS SHOWN
APPROVED : (FOR DIRECTOR GENERAL)		DWG NO. GD–707
		SHEET NO. 47

D:\std dwg 2015\GD-707(REV00)

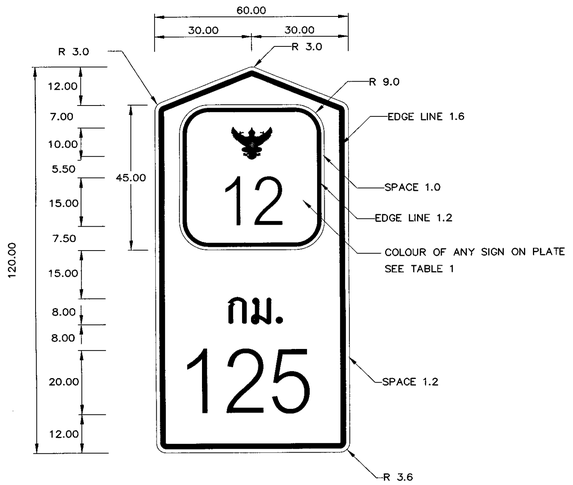

KILOMETER SIGN TYPE A

NOT TO SCALE

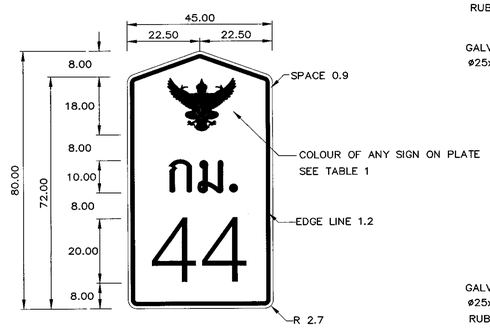

KILOMETER SIGN TYPE B

NOT TO SCALE

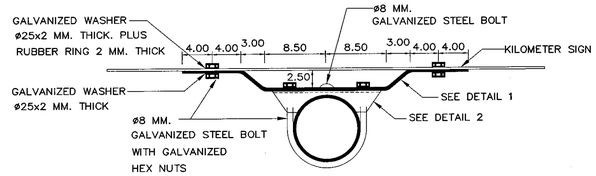

INSTALLATION SIGN PLATE WITH STEEL PIPE

NOT TO SCALE

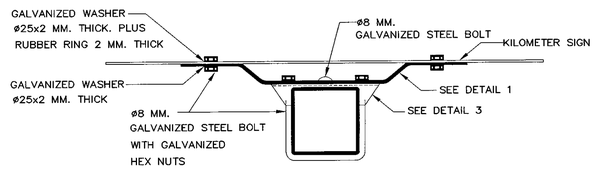

INSTALLATION SIGN PLATE WITH SQUARE STEEL PIPE

NOT TO SCALE

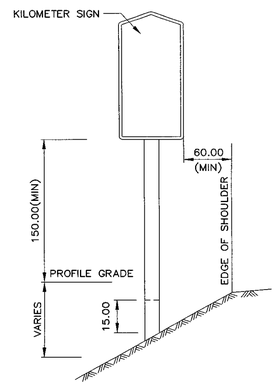

KILOMETER SIGN INSTALLATION

NOT TO SCALE

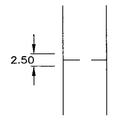

DETAIL 4

NOT TO SCALE

TABLE 1 : COLOUR OF ANY SIGNS ON PLATE

CLASSIFICATION OF HIGHWAYS	COLOUR OF ANY SIGNS			
	BOARD	GARUDA	LETTER	EDGE LINE
HIGHWAY	WHITE	BLACK	BLACK	BLACK
MOTORWAY	GREEN	WHITE	WHITE	WHITE
MOTORWAY (TOLLWAY)	BLUE	WHITE	WHITE	WHITE

TABLE 2 : POSITION OF HOLES FOR SIGN FIXING PLATES TO SIGN POST

DIMENSION	REGULATORY SIGN SIZE (CM.)	
	60x120 (A)	45x80 (B)
A	18	12
B	94	61
C	8	7
D	31	31

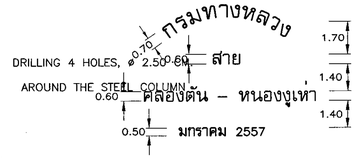

TYPICAL BACK-SIGN STAMP

NOT TO SCALE

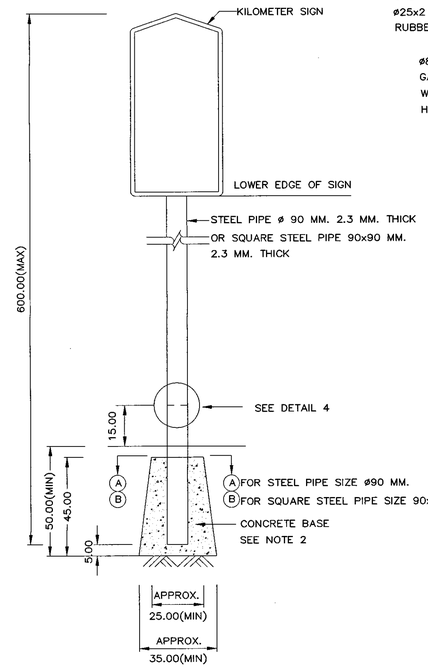

SIGN POST INSTALLATION

NOT TO SCALE

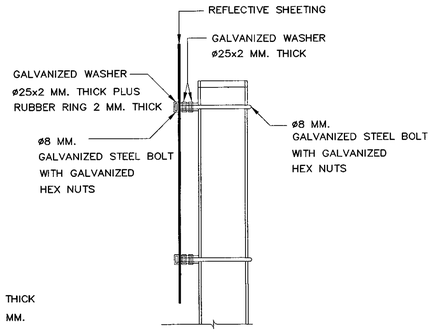

TYPICAL FIXING OF SIGN PLATE

NOT TO SCALE

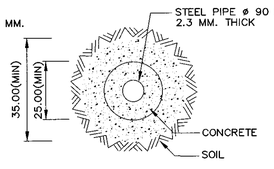

SECTION Ⓐ – Ⓐ

NOT TO SCALE

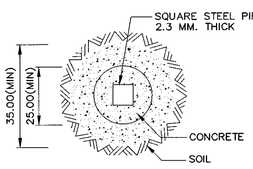

SECTION Ⓑ – Ⓑ

NOT TO SCALE

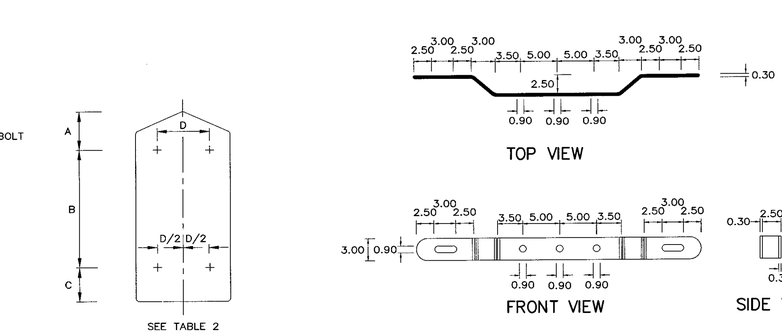

POSITION OF HOLES FOR FIXING

NOT TO SCALE

TOP VIEW

FRONT VIEW

SIDE VIEW

DETAIL 1

NOT TO SCALE

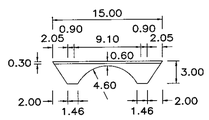

TOP VIEW

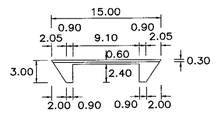

TOP VIEW

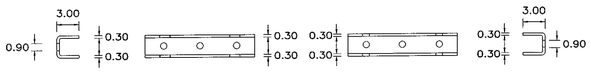

SIDE VIEW FRONT VIEW FRONT VIEW SIDE VIEW

DETAIL 2

NOT TO SCALE

DETAIL 3

NOT TO SCALE

NOTES :

1. ALL DIMENSIONS ARE IN CENTIMETERS UNLESS OTHERWISE INDICATED.
2. CONCRETE BASE SHALL HAVE A PROPORTION OF 1 CEMENT : 3 SAND : 6 AGGREGATE BY VOLUME AND A CONCRETE SLUMP OF 10 CM. (MAX.)
3. KILOMETER SIGN POSITIONING AND KILOMETER COUNTING SHALL CONFORM TO NAME AND NUMBERED OF HIGHWAY SYSTEM, SPECIFY THE BEGINNING POINT IS 0+000 KM. AND COUNTING TO THE ENDING POINT OF HIGHWAY UNLESS OTHER WISE SPECIFIED. THE DISTANCE SHALL BE CORRECTLY REMEASURED EVERY 1,000 M.
4. KILOMETER SIGN TYPE A SHALL APPLY TO MAIN HIGHWAYS WHICH ARE CONSISTED 3 OR OVER TRAFFIC LANES IN EACH DIRECTION.
5. KILOMETER SIGN TYPE B SHALL APPLY TO GENERAL HIGHWAYS. MOREOVER, HIGHWAY NUMBER SIGN SHALL BE INSTALLED WITH KILOMETER SIGN EVERY 10–15 KM.
6. SIGN PLATE SHALL BE MADE OF STEEL 1.2 MM. THICK AND SHALL CONFORM TO ASTM A245, GRADE B.
7. REFLECTIVE SHEETING SHALL CONFORM TO TIS. 606, FOR KILOMETER SIGN TYPE A USED HIGH INTENSITY GRADE (TYPE 3 OR 4) AND FOR KILOMETER SIGN TYPE B USED ENGINEERING GRADE (TYPE 1).
8. BACK OF SIGN, CLOSE TO EDGE OF PAVEMENT SIDE SHALL BE STAMPED.
9. LENGTH OF SIGN POSTS AND POSITIONS OF HOLES STATED IN THE DRAWING SHALL BE ADJUSTED DEPENDING ON SITE CONDITIONS.
10. PORTION OF STEEL POST FROM GROUND LINE TO THE ELEVATION OF 20 CM. ABOVE FINISHED ROADWAY PROFILE SHALL BE PAINTED IN BLACK AND ALL OTHER PART SHALL BE PAINTED IN WHITE.
11. KILOMETER SIGN SHALL BE APPLIED INCASE RESTRICT OF AREA WHERE CANNOT BE INSTALLED THE KILOMETER STONE OR INCASE OF OBSTACLE THAT BLOCKED THE VISION TO SEE KILOMETER STONE, AND UNDER THE APPROVAL OF THE ENGINEER.

REF.	REVISION	SIGNATURE	DATE

KINGDOM OF THAILAND

MINISTRY OF TRANSPORT

DEPARTMENT OF HIGHWAYS

STANDARD DRAWING

KILOMETER MARKER
KILOMETER SIGN

DESIGNED : D.O.H. & CONSULTANTS	**CHECKED :** BUREAU OF LOCATION & DESIGN	**DATE :** OCT 2015
SUBMITTED : (DIRECTOR OF LOCATION & DESIGN BUREAU)		**SCALE :** AS SHOWN
APPROVED : (FOR DIRECTOR GENERAL)		**DWG NO.** GD–708
		SHEET NO. 48

D:\std dwg 2015\GD-708(REV00)

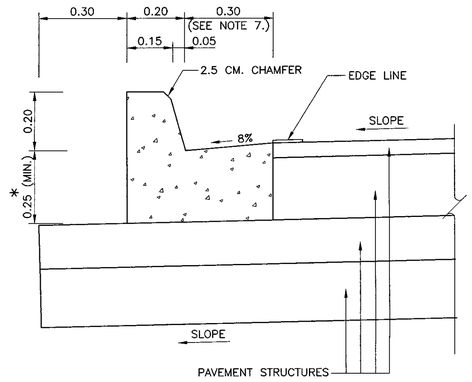

CONCRETE CURB AND GUTTER
NOT TO SCALE

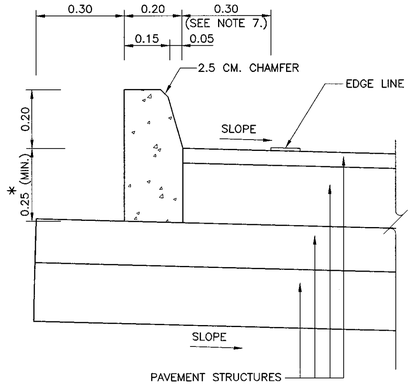

CONCRETE CURB
NOT TO SCALE

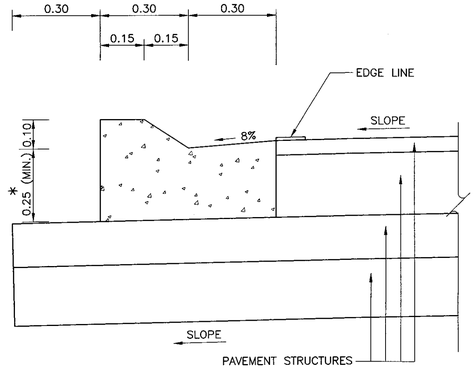

MOUNTABLE CURB AND GUTTER
NOT TO SCALE

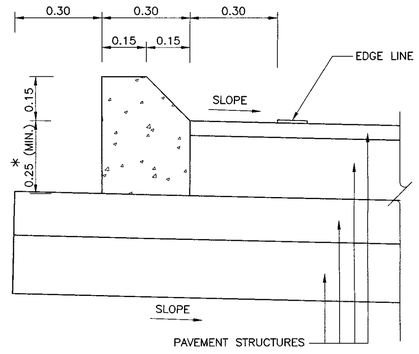

MOUNTABLE CURB
NOT TO SCALE

* IN CASE OF CONCRETE PAVEMENT 23 CM. THICKNESS. SPECIFY HIGHNESS TO BE 23 CM.

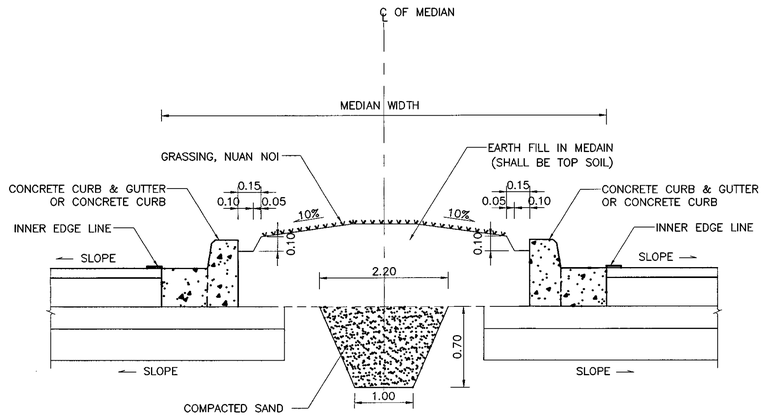

DETAIL OF CURB AND GUTTER OR CURB AT RAISED MEDIAN
NOT TO SCALE

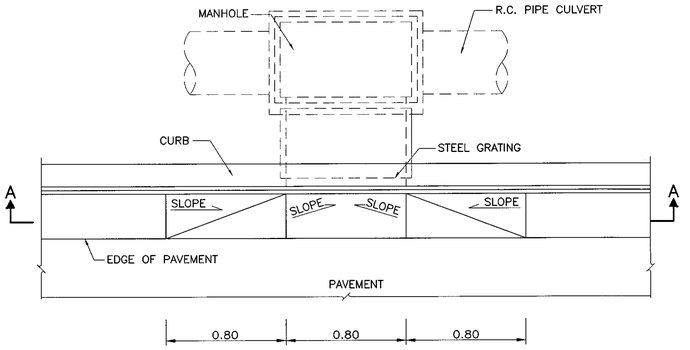

PLAN OF INLET DRAIN
NOT TO SCALE

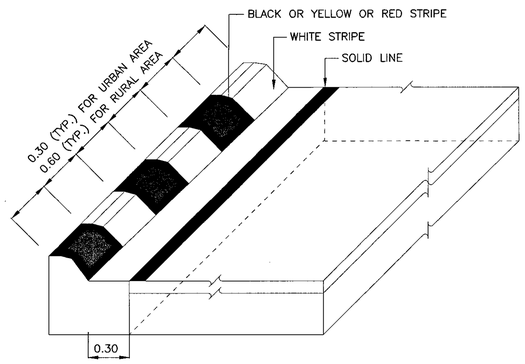

CURB MARKING DETAIL
NOT TO SCALE

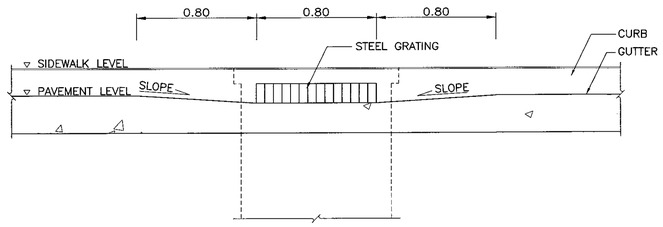

SECTION A–A
NOT TO SCALE

NOTES :

1. ALL DIMENSIONS ARE IN METERS UNLESS OTHERWISE INDICATED.
2. CONCRETE SHALL HAVE A MINIMUM ULTIMATE COMPRESSIVE STRENGTH OF 25 MPa. (255 KSC.) FOR 15x15x15 CM. CUBE AT 28 DAYS. CEMENT SHALL CONFORM TO TIS. 15 TYPE I PORTLAND CEMENT OR APPROVAL TYPE.
3. REINFORCING STEEL SHALL CONFORM TO TIS. 20 GRADE SR 24.
4. WHITE, BLACK, YELLOW AND RED PAINTS SHALL BE GLOSS ENAMEL PAINT AND CONFORM TO TIS. 327.
5. LOCATION FOR CURB MARKING SHALL BE AS SHOWN ON PLAN OR DIRECTED BY THE ENGINEER.
6. JOINT IN CONCRETE CURB & CUBE AND GUTTER SHALL BE SPACED AT 10.00 M. INTERVAL, THE WIDTH OF THE JOINT IS 1 CM. AND FILLED WITH MORTAR 1:3 (PORTLAND CEMENT : SAND) BY VOLUME.
7. THE WIDTH SHALL BE 0.50 M. FOR HIGHWAY CLASSIFICATIONS OF D OR 1.

REF.	REVISION	SIGNATURE	DATE

KINGDOM OF THAILAND

MINISTRY OF TRANSPORT
DEPARTMENT OF HIGHWAYS

STANDARD DRAWING

CONCRETE CURB & CURB AND GUTTER

DESIGNED : D.O.H. & CONSULTANTS	**CHECKED :** BUREAU OF LOCATION & DESIGN	**DATE :** OCT 2015
SUBMITTED :	(DIRECTOR OF LOCATION & DESIGN BUREAU)	**SCALE :** AS SHOWN
APPROVED :	(FOR DIRECTOR GENERAL)	**DWG NO.** GD–709
		SHEET NO. 49

D:\std dwg 2015\GD-709(REV00)

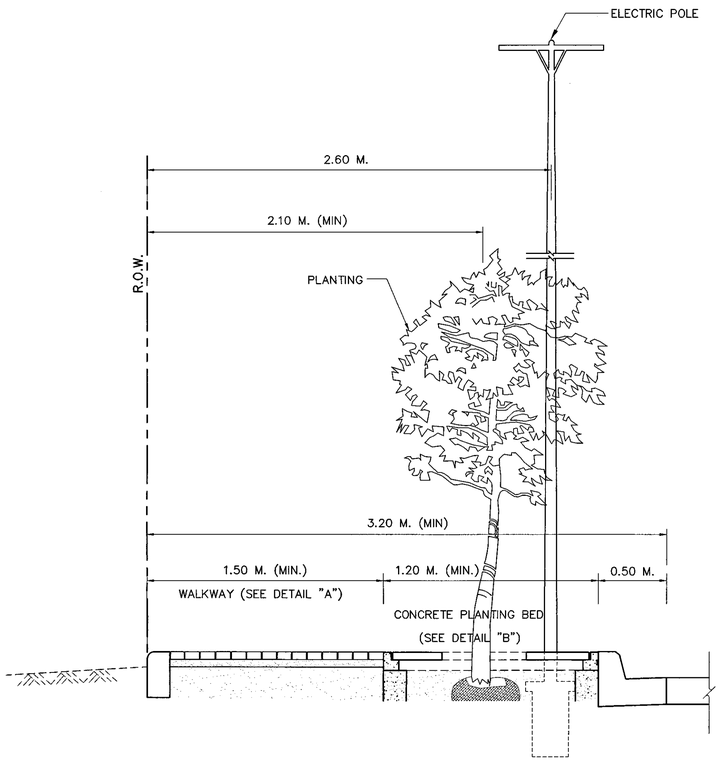

SIDEWALK AND CONCRETE PLANTING BED

NOT TO SCALE

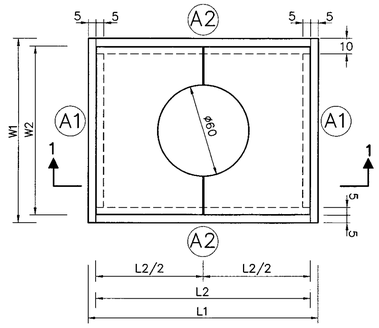

PLANTING BED PLAN

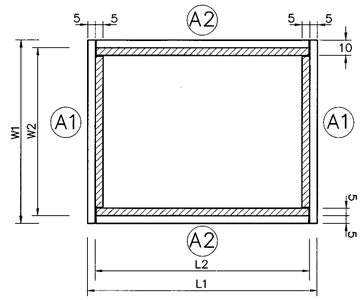

PLANTING BED PLAN

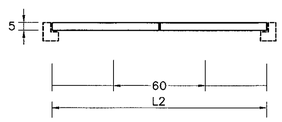

GROUND COVER CONCRETE SECTION 1 – 1

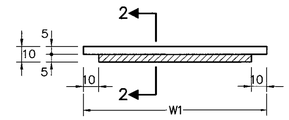

A1 PLAN

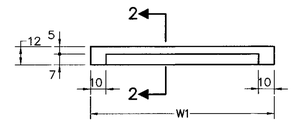

A1 FRONT SECTION

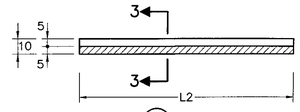

A2 PLAN

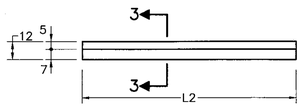

A2 FRONT SECTION

A1 SECTION 2 – 2 A2 SECTION 3 – 3

TABLE 1 : SIZE OF CONCRETE PLANTING BED

SIZE OF BED	WIDTH			
	W1	W2	L1	L2
120x120	120	110	120	110
120x150	120	110	150	140
120x160	120	110	160	150
120x120	120	110	120	110
150x150	150	140	150	140
160x160	160	150	160	150

TABLE 2 : PROPERTIES OF SAND BEDDING AND JOINT FILLING SAND

SIEVE SIZE	% PASSING	
MM.	SAND BEDDING	JOINTING SAND
9.5	100	–
4.75	95 – 100	–
2.36	80 – 100	100
1.18	50 – 85	90 – 100
0.60	25 – 60	60 – 90
0.30	10 – 30	30 – 60
0.15	5 – 15	15 – 30
0.075	0 – 5	10 – 20

NOTES :

1. DIMENSION ARE IN CENTIMETERS UNLESS OTHERWISE INDICATED.
2. CONCRETE PAVING BLOCK PROPERTY SHALL CONFORM TO TIS. 378, TIS. 826 AND TIS. 827.
3. FORMS AND PATTERN OF CONCRETE PAVING BLOCK SHALL BE APPROVED BY ENGINEER.
4. PLANTING BED SHALL BE INSTALLED ON 3.20 M. (MIN.) OF SIDEWALK OR APPROVED BY ENGINEER.
   - 4.1 PLANTING BED SHALL BE PRE-CAST CONCRETE MANUFACTURED THAT SHALL HAVE A MINIMUM ULTIMATE COMPRESSIVE STRENGTH 25 MPa. (250 KSC.) FOR 15X15X15 CM. CUBE AT 28 DAYS.
   - 4.2 FORMS AND PATTERN OF GROUND COVER CONCRETE ARE SHOWN AS AN EXAMPLE. IT IS ABLE TO ADJUST BY ENGINEER.
   - 4.3 INSTALLATION METHODS
     - BEFORE INSTALLATION, THE EXISTING GROUND LEVEL HAVE TO BE ADJUSTED AND CAST IN PLACE WITH ROUGH CONCRETE AS THICKNESS AND WIDTH DESIGN, THEN PLACE CONCRETE PLANTING BED ON TOP. THE HOLE SHALL BE PROVIDED SUFFICIENT DEPTH FOR PLANTING.
     - BRING TREE INTO THE PROVIDED HOLE AND FILL WITH SOIL UNTIL THE LEVEL OF SOIL SHALL BE LOWER THAN WALKWAY LEVEL OF 12 CM. APPROXIMATELY. THEN, LAY GRAVEL SIZE 1 INCH AT 7 CM. THICK. FINALLY, INSTALL GROUND COVER CONCRETE ON TOP.

EXAMPLE FOR CONCRETE PLANTING BED

NOT TO SCALE

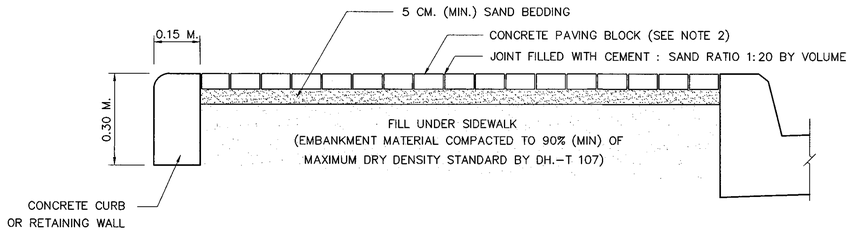

CONCRETE PAVING BLOCK

DETAIL "A"

SCALE 1 : 10

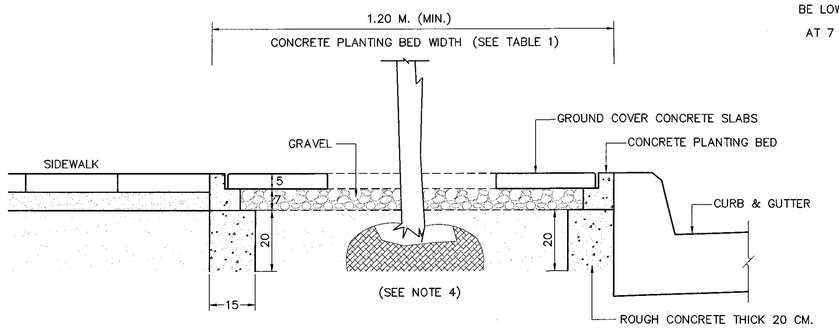

CONCRETE PLANTING BED INSTALLATION

DETAIL "B"

SCALE 1 : 10

REF.	REVISION	SIGNATURE	DATE

KINGDOM OF THAILAND

MINISTRY OF TRANSPORT

DEPARTMENT OF HIGHWAYS

STANDARD DRAWING

SIDEWALK

DESIGNED : D.O.H. & CONSULTANTS	**CHECKED :** BUREAU OF LOCATION & DESIGN	**DATE :** OCT 2015
SUBMITTED : (DIRECTOR OF LOCATION & DESIGN BUREAU)		**SCALE :** AS SHOWN
APPROVED : (FOR DIRECTOR GENERAL)		**DWG NO.** GD-710
		SHEET NO. 50

D:\Std dwg 2015\GD-710(SIDEWALK).dgn

SECTION 3) TRAFFIC SIGN, MARKING AND SAFETY DEVICES

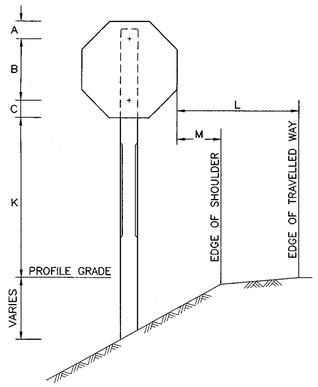

REGULATORY SIGN

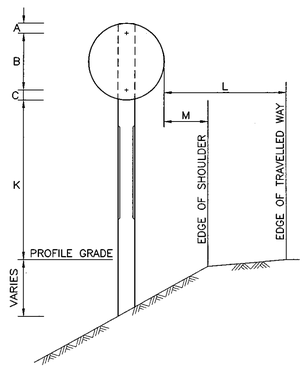

REGULATORY SIGN

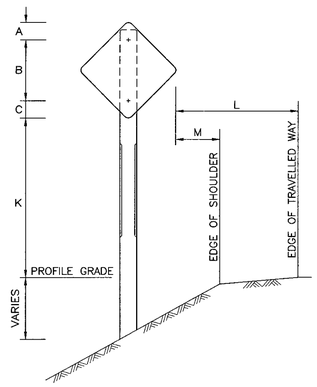

WARNING SIGN

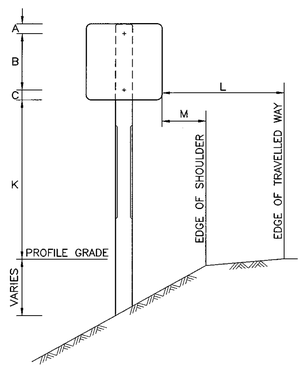

ROUTE MARKER

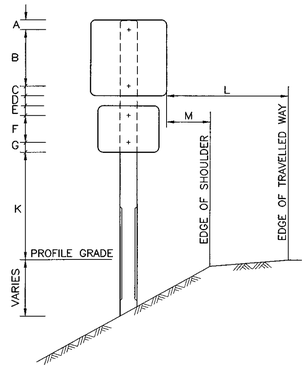

ROUTE TURN ASSEMBLIES TYPE I
ON DIRECTIONAL ASSEMBLIES

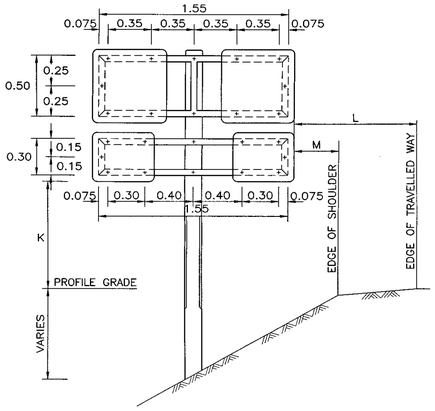

ROUTE TURN ASSEMBLIES TYPE II

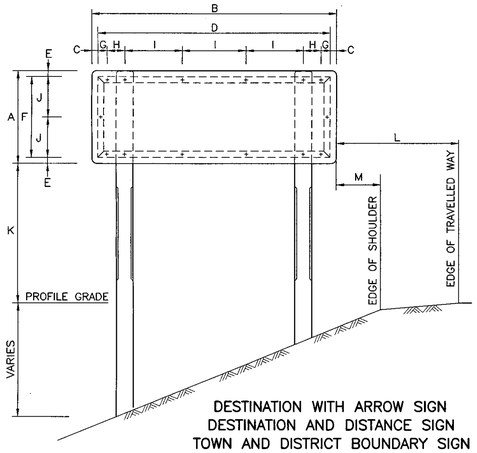

DESTINATION WITH ARROW SIGN
DESTINATION AND DISTANCE SIGN
TOWN AND DISTRICT BOUNDARY SIGN
WITH THAI AND ENGLISH WORDS
OR THAI WORDS ONLY

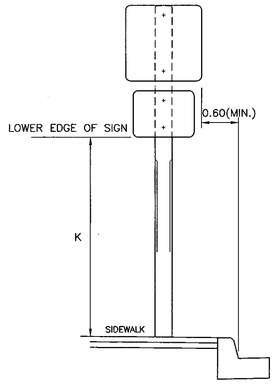

TYPICAL SIGN INSTALLATION
AT SIDEWALK

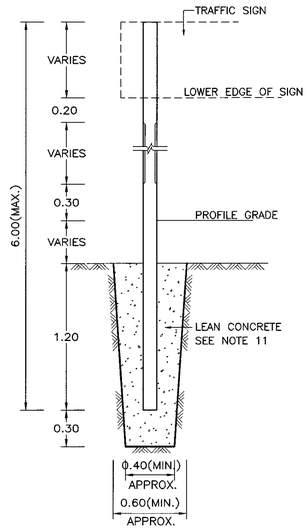

SIGN POST INSTALLATION DETAIL
NOT TO SCALE

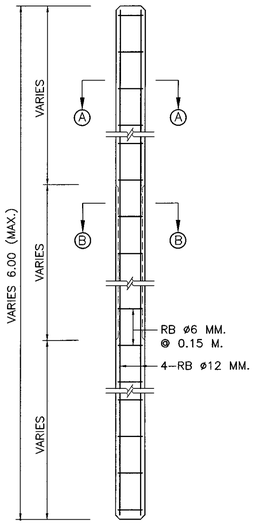

REINFORCE CONCRETE POST DETAIL
NOT TO SCALE

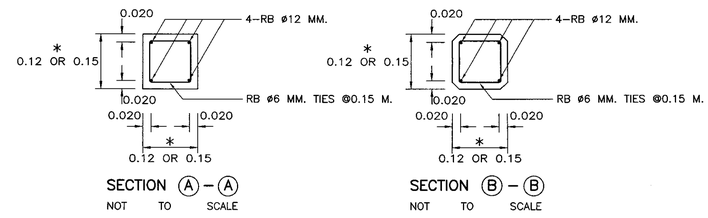

* SIZE OF POST SHALL BE 0.12x0.12 M. FOR SINGLE POST AND TWIN POSTS WITH TOTAL AREA TOTAL AREA OF THE SIGN PLATES IS NOT MORE THAN 2 SQ.M. AND 4 SQ.M. RESPECTIVELY OR OTHERWISE THE SIZE SHALL BE 0.15x0.15 M.

NOTES:

1. ALL DIMENSIONS ARE IN METERS UNLESS OTHERWISE INDICATED.
2. CONCRETE SHALL HAVE A MINIMUM ULTIMATE COMPRESSIVE STRENGTH OF 20 MPa.(204 KSC.) FOR 15X15X15 CM. CUBE AT 28 DAYS, CEMENT SHALL CONFORM TO TIS. 15 TYPE I PORTLAND CEMENT OR APPROVAL TYPE.
3. SIGN PLATE SHALL BE MADE OF 2 MM. THICK ALUMINIUM ALLOY.
4. ALUMINIUM ALLOY SIGN PLATE SHALL CONFORM TO TIS. 331.
5. UNLESS OTHERWISE INDICATED, SIGN AND THEIR SUPPORTS SHALL BE OF THE SIZES, COLORS AND TYPES PRESCRIBED BY, AND SITE IN ACCORDANCE WITH THE RECOMMENDATIONS OF, THE DEPARTMENT OF HIGHWAYS' TRAFFIC CONTROL DEVICE MANUAL.
6. REFLECTIVE SHEETING SHALL CONFORM TO TIS. 606 TYPE 1 (COEFFICIENT OF RETRO–REFLECTION LEVEL 1) FOR HIGHWAY CLASS 2, 3, 4 AND 5, FOR OTHER SHALL BE IN ACCORDANCE WITH TRAFFIC CONTROL DEVICE MANUAL AS PUBLISHED BY DOH.
7. SIGN FRAME SHALL BE MADE OF 50x25x1.6 MM. STEEL RECTANGULAR TUBING FRAME WELDED AND SMOOTHED IN PRIMING PAINT FOR FRAME SHALL BE RUST PREVENTIVE PAINT WHICH CONFORMS TO TIS. 2387; THE SUCCEEDING COATING SHALL BE PAINTED WITH BLACK METAL PAINT.
8. LENGTH OF SIGN POSTS AND POSITIONS OF HOLES STATED IN THE DRAWING ARE FOR THE MINIMUM SIZE ONLY, THESE LENGTHS AND POSITION OF HOLES SHALL BE ADJUSTED DEPENDING ON SITE CONDITIONS.
9. PORTION OF POST FROM GROUND LINE TO THE ELEVATION OF 20 CM. ABOVE FINISHED ROADWAY PROFILE SHALL BE PAINTED IN BLACK AND ALL OTHER PART SHALL BE PAINTED IN WHITE.
10. BACK OF SIGN, CLOSE TO EDGE OF PAVEMENT SIDE SHALL BE STAMPED WITH DEPTH NOT LESS THAN 0.50 M.
11. LEAN CONCRETE FOR SIGN POST BASE SHALL HAVE A PROPORTION OF CEMENT : SAND : AGGREGATE 1 : 3 : 6 BY VOLUME AND A CONCRETE SLUMP OF 10 CM. (MAX.)
12. CLEAR CONCRETE COVER SHALL BE 2.5 CM.
13. REINFORCING STEEL SHALL CONFORM TO TIS. 20 GRADE SR 24
14. IN CASE, SELECTED STEEL COLUMN REPLACE CONCRETE COLUMN :
    – STEEL COLUMN Ø 7.50X7.50X0.32 CM. REPLACE CONCRETE COLUMN OF 0.12X0.12 M.
    – STEEL COLUMN Ø 10.00X10.00X0.32 CM. REPLACE CONCRETE COLUMN OF 0.15X0.15 M.
15. STEEL COLUMN SHALL BE APPLIED RUST PROTECTING PAINTED BY BOTH INTERIOR AND EXTERIOR TYPES FOLLOWING TIS. 2387 THEN APPLY EXTERIOR BLACK AND WHITE COLOR PAINTED AT LEAST 2 TIMES WHICH CONFORMS TO TIS. 327
16. STEEL COLUMN SHALL CONFORM TO TIS. 107
17. IN CASE OF INSTALLATION SIGNAGE ON WALKWAY, IT IS ABLE TO USE 0.15X0.15 M. SINGLE CONCRETE COLUMN INSTEAD OF DOUBLE COLUMN BY INSTALLATION AT THE MIDDLE OF SIGNAGE WHICH IS SIZING NOT MORE THAN 3 SQ.M.

TABLE A MINIMUM VERTICAL DISTANCE TO BOTTOM OF SIGN (K)

FACILITY, DISTRICT, OR SIGN DESCRIPTION	VERTICAL DISTANCE
CONVENTIONAL ROADS IN RURAL DISTRICTS, WITH NO PARKING OR SIDEWALK	1.5 M.(MIN.) PRIMARY PANEL 1.2 M.(MIN.) SECONDARY (SUPPLEMENTARY) PANEL
CONVENTIONAL ROADS IN RURAL OR URBAN DISTRICTS, WHERE PARKING OR SIDEWALK	2.1 M.(MIN.) PRIMARY PANEL 1.8 M.(MIN.) SECONDARY (SUPPLEMENTARY) PANEL

TABLE B MINIMUM LATERAL OFFSET TO NEAREST EDGE OF SIGN (L OR M)

FACILITY AND DISTRICT DESCRIPTION	OFFSET
ALL ROADS IN RURAL DISTRICTS	3.6 M.(MIN.) FROM EDGE OF TRAVELLED WAY IF SHOULDER WIDTH LESS THAN 2.5 M. 1.1 M.(MIN.) FROM EDGE OF SHOULDER IF SHOULDER WIDTH IS GREATER THAN OR EQUAL TO 2.5 M.
ALL ROADS IN RURAL AND URBAN DISTRICTS WHERE LATERAL OFFSET IS LIMITED	0.6 M.(MIN.) FROM FACE OF CURB OR EDGE OF SHOULDER



TYPICAL BACK–SIGN STAMP
SCALE 1:1

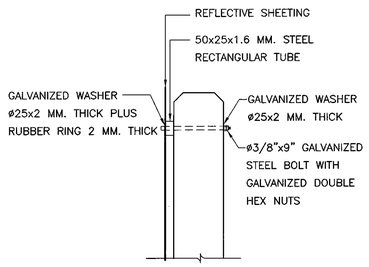

TYPICAL FIXING OF SIGN PLATE

TABLE C POSITION OF HOLES FOR FIXING SIGN PLATES TO SIGN POST

DIMENSION	REGULATORY SIGN SIZE (CM.)			WARNING SIGN SIZE (CM.)			ROUTE MARKER (CM.)			ROUTE TURN ASSEMBLIES TYPE I & TYPE II (CM.)		
	60	75	90	60	75	90	60	75	90	60	75	90
A	7.5	15	15	20	20	20	7.5	7.5	7.5	7.5	7.5	7.5
B	45	45	60	45	68.5	90	45	60	75	45	60	75
C	7.5	15	15	20	17.5	17.5	7.5	7.5	7.5	7.5	7.5	7.5
D							7.5	7.5	7.5	7.5	7.5	7.5
E							7.5	7.5	7.5	7.5	7.5	7.5
F							22.5	35	45	22.5	35	45
G							10	7.5	7.5	10	7.5	7.5

TABLE D POSITION OF HOLES FOR FIXING SIGN PLATES TO SIGN POST

SIGN SIZE (CM.)		DIMENSION (CM.)								REMARK
WIDTH A	LENGTH B	C	D	E	F	G	H	I	J	
75	210	5	200	5	65	7.5	17.5	50	32.5	DESTINATION WITH ARROW
90	240	20	200	12.5	65	7.5	17.5	50	32.5	SIGN, THAI & ENGLISH WORDS
60	210	5	200	5	50	7.5	17.5	50	25	DESTINATION WITH ARROW
75	240	20	200	12.5	50	7.5	17.5	50	25	SIGN, THAI WORDS ONLY
75	180	5	170	5	65	7.5	17.5	40	32.5	DESTINATION AND DISTANCE
90	180	5	170	12.5	65	7.5	17.5	40	32.5	SIGN, THAI & ENGLISH WORDS
60	180	5	170	5	50	7.5	17.5	40	25	DESTINATION AND DISTANCE
75	180	5	170	12.5	50	7.5	17.5	40	25	SIGN, THAI ONLY
65	180	5	170	5	55	7.5	17.5	40	27.5	TOWN & DISTRIC BOUNDARY
80	180	5	170	12.5	55	7.5	17.5	40	27.5	SIGN, THAI & ENGLISH WORDS

REF.	REVISION	SIGNATURE	DATE

KINGDOM OF THAILAND

MINISTRY OF TRANSPORT
DEPARTMENT OF HIGHWAYS

STANDARD DRAWING

MINOR ROAD SIGN
SIGN & POST DETAILS

DESIGNED : D.O.H. & CONSULTANTS	**CHECKED :** BUREAU OF LOCATION & DESIGN	**DATE :** OCT 2015
SUBMITTED : (DIRECTOR OF LOCATION & DESIGN BUREAU)		**SCALE :** AS SHOWN
APPROVED : (FOR DIRECTOR GENERAL)		**DWG NO.** RS–101
		SHEET NO. 51

D:\std dwg 2015\RS-101(REV00)

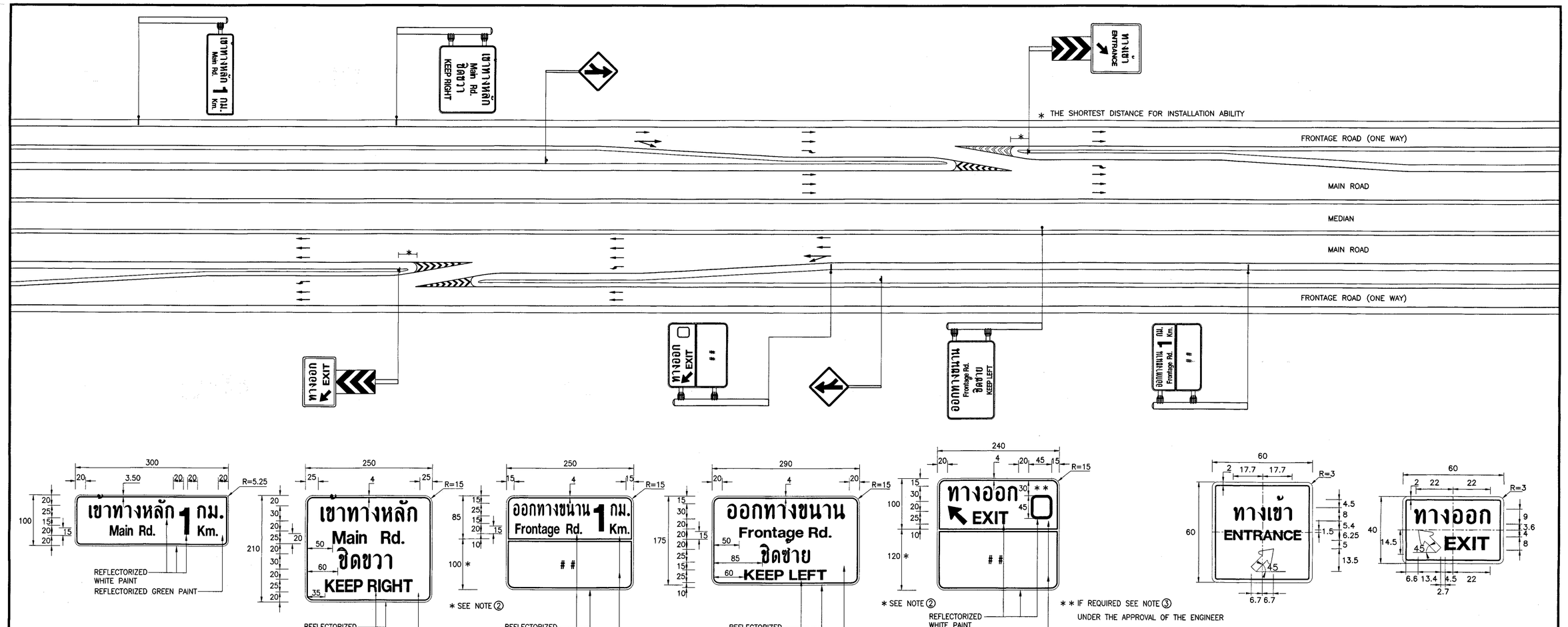

NOTES:

1. ALL DIMENSIONS ARE IN CENTIMETERS UNLESS OTHEERWISE INDICATED.
2. THE BLANK AREA CONTAINS PLACE' NAME, TO CONSIDER AS FOLLOWS:
   - 2.1 ONLY 1–2 NAMES ARE CONTAINED IN THE AREA, EXCEPT NECESSARY FOR SPECIAL CASE SHALL BE 3 NAMES.
   - 2.2 THE PLACES' NAME SHALL BE THE NAME OF PLACE WHERE PUBLICITY OF USE.
   - 2.3 IF MORE THAN 3 PLACES, THE ORDER OF IMPORTANCE AND DISTRIBUTION OF PLACES ARE CONSIDERED.
   - 2.4 THE HOSPITAL THAT HAVE EMERGENCY ROOM IS CONSIDERED THE FIRST.
   - 2.5 THE WORDS "PUBLICITY TO USE" MEANS THE PUBLICITY WHO USE THE PLACES WITHOUT FAMILIAR OR REST AT THE PLACES.
   - 2.6 THE PROJECT ENGINEER AND THE DISTRICT ENGINEER CONSIDER THE PLACES' NAME TOGETHER AND PRESENTS TO DIRECTOR OF HIGHWAY DIVISION FOR APPROVAL.
3. THE 45x45 CM. SQUARE CONTAINS EXITS' NUMBER WHICH AS FOLLOWS:
   - 3.1 THE EXITS' NUMBER SHALL BE APPLIED FOR PRIMARY HIGHWAY WITH LONG FRONTAGE ROAD.
   - 3.2 FOR OUTBOUND ROUTE, THE NUMBER ARE ODD.
   - 3.3 FOR INBOUND ROUTE, THE NUMBER ARE EVEN.
   - 3.4 THE BEGINNING OF EXITS' NUMBER IS AT THE ORIGIN OF PRIMARY HIGHWAY.

REF.	REVISION	SIGNATURE	DATE

KINGDOM OF THAILAND

MINISTRY OF TRANSPORT
DEPARTMENT OF HIGHWAYS

STANDARD DRAWING

MINOR ROAD SIGN
ROAD SIGN AT EXIT AND ENTRANCE

DESIGNED : D.O.H. & CONSULTANTS	**CHECKED :** BUREAU OF LOCATION & DESIGN	**DATE :** OCT 2015
SUBMITTED : (DIRECTOR OF LOCATION & DESIGN BUREAU)		**SCALE :** AS SHOWN
APPROVED : (FOR DIRECTOR GENERAL)		**DWG NO.** RS–102
		SHEET NO. 52

D:\std dwg 2015\RS-102(REV00)

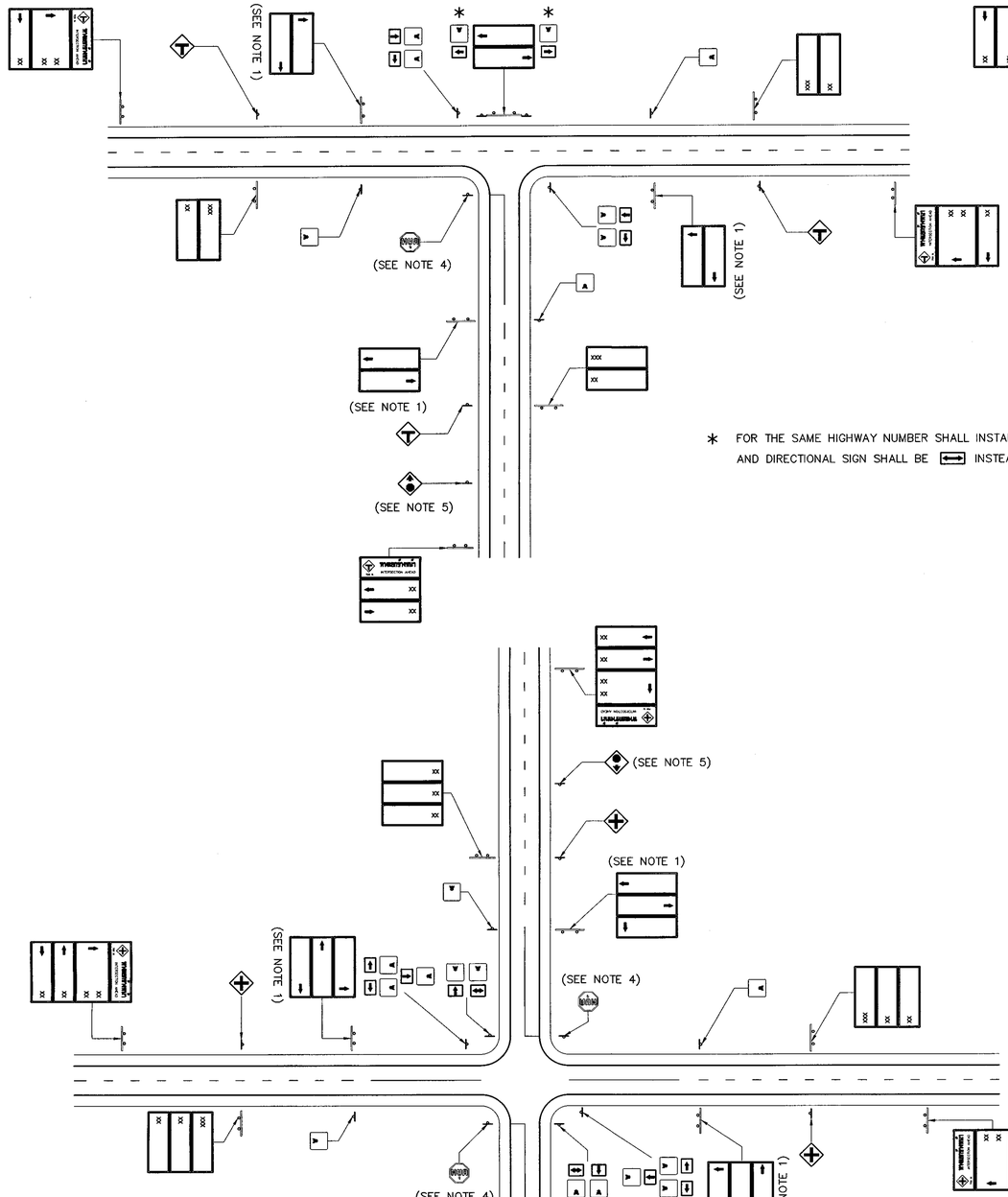

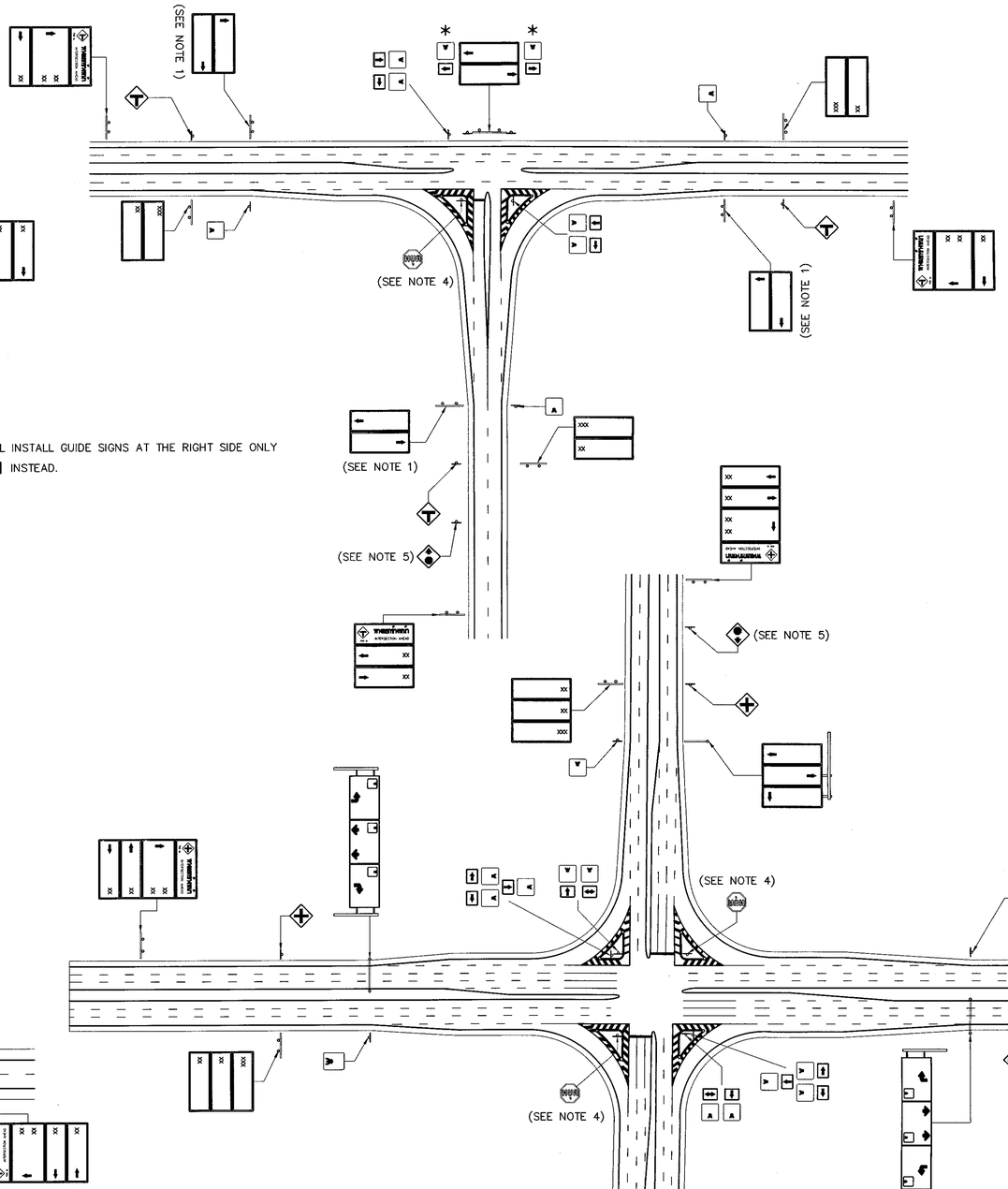

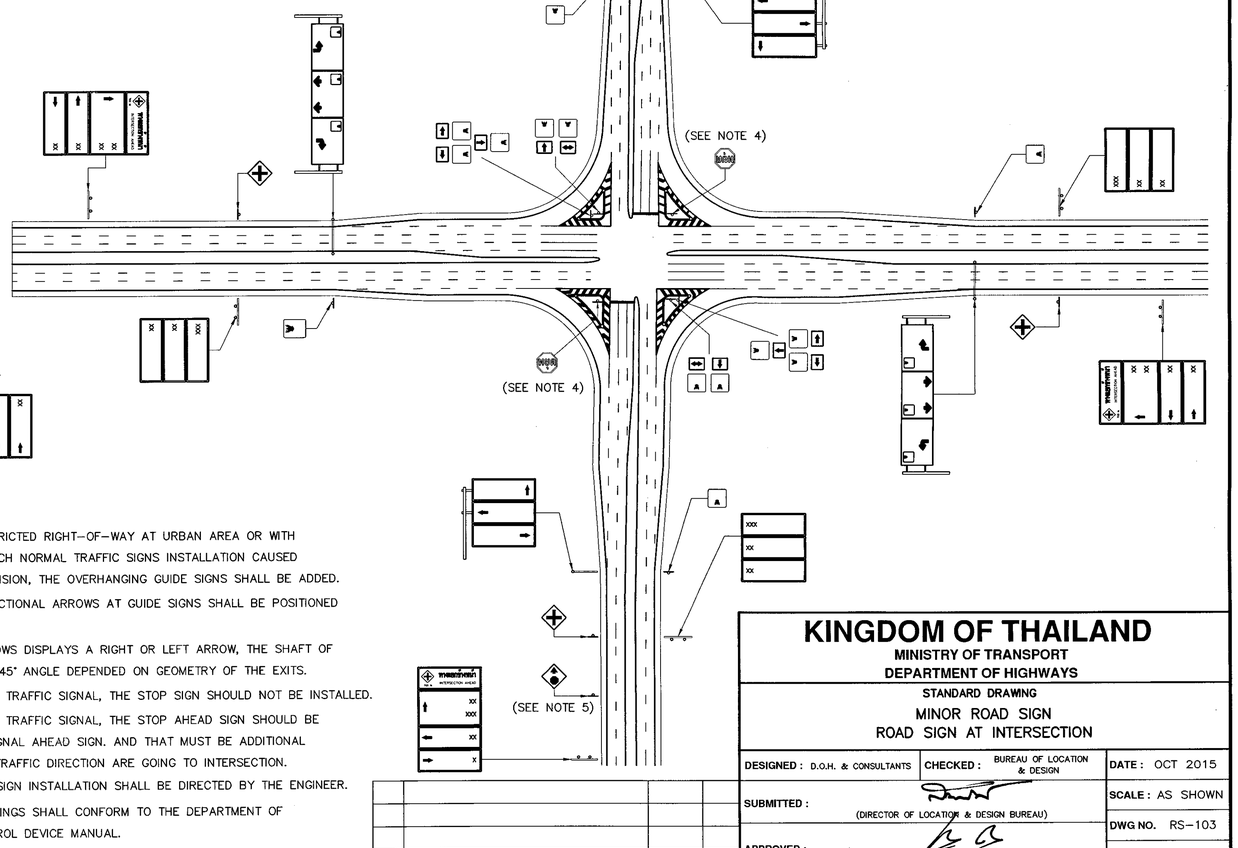

* FOR THE SAME HIGHWAY NUMBER SHALL INSTALL GUIDE SIGNS AT THE RIGHT SIDE ONLY AND DIRECTIONAL SIGN SHALL BE ⟷ INSTEAD.

NOTES :

1. FOR HIGHWAYS WITH RESTRICTED RIGHT-OF-WAY AT URBAN AREA OR WITH CONGESTED TRAFFICS WHICH NORMAL TRAFFIC SIGNS INSTALLATION CAUSED UNSEEN OR NOT CLEAR VISION, THE OVERHANGING GUIDE SIGNS SHALL BE ADDED.
2. THE DOWN-POINTING DIRECTIONAL ARROWS AT GUIDE SIGNS SHALL BE POSITIONED AT THE MIDDLE LANES.
3. THE ADVANCE TURN ARROWS DISPLAYS A RIGHT OR LEFT ARROW, THE SHAFT OF WHICH IS BENT OR AT A 45° ANGLE DEPENDED ON GEOMETRY OF THE EXITS.
4. IN CASE OF INSTALLATION TRAFFIC SIGNAL, THE STOP SIGN SHOULD NOT BE INSTALLED.
5. IN CASE OF INSTALLATION TRAFFIC SIGNAL, THE STOP AHEAD SIGN SHOULD BE REPLACED BY TRAFFIC SIGNAL AHEAD SIGN. AND THAT MUST BE ADDITIONAL INSTALLED ON ANOTHER TRAFFIC DIRECTION ARE GOING TO INTERSECTION.
6. ALL LENGTH OF TRAFFIC SIGN INSTALLATION SHALL BE DIRECTED BY THE ENGINEER.
7. TRAFFIC SIGNS AND MARKINGS SHALL CONFORM TO THE DEPARTMENT OF HIGHWAYS' TRAFFIC CONTROL DEVICE MANUAL.

REF.	REVISION	SIGNATURE	DATE

KINGDOM OF THAILAND

MINISTRY OF TRANSPORT
DEPARTMENT OF HIGHWAYS

STANDARD DRAWING

MINOR ROAD SIGN
ROAD SIGN AT INTERSECTION

DESIGNED : D.O.H. & CONSULTANTS	**CHECKED :** BUREAU OF LOCATION & DESIGN	**DATE :** OCT 2015
SUBMITTED : (DIRECTOR OF LOCATION & DESIGN BUREAU)		**SCALE :** AS SHOWN
APPROVED : (FOR DIRECTOR GENERAL)		**DWG NO.** RS-103
		SHEET NO. 53

D:\std dwg 2015\RS-103(ROAD).dwg

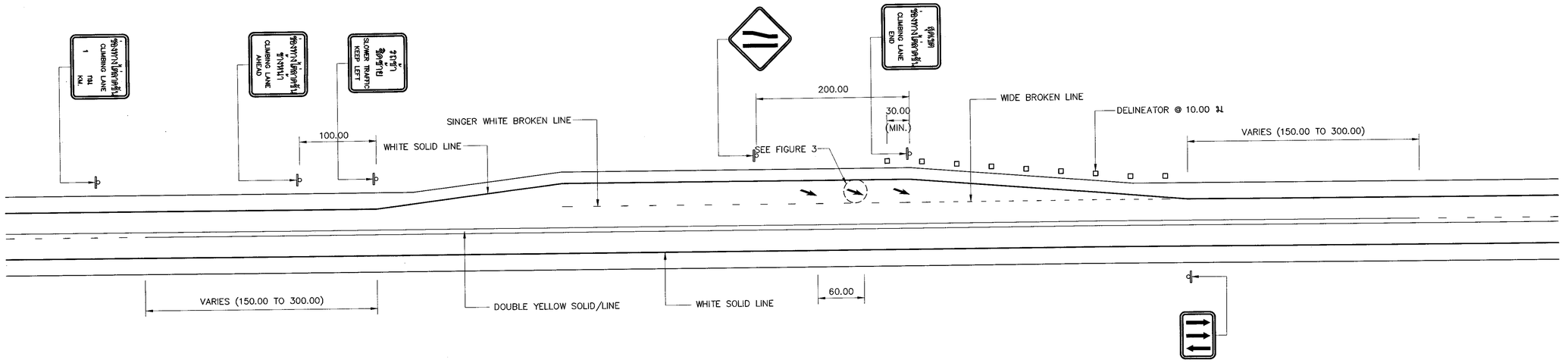

FIGURE 1 INSTALLATION TRAFFIC SIGN ON CLIMBING LANE PLAN FOR 2 LANES HIGHWAYS (ONLY LEFT SIDE OF TRAFFIC DIRECTION)

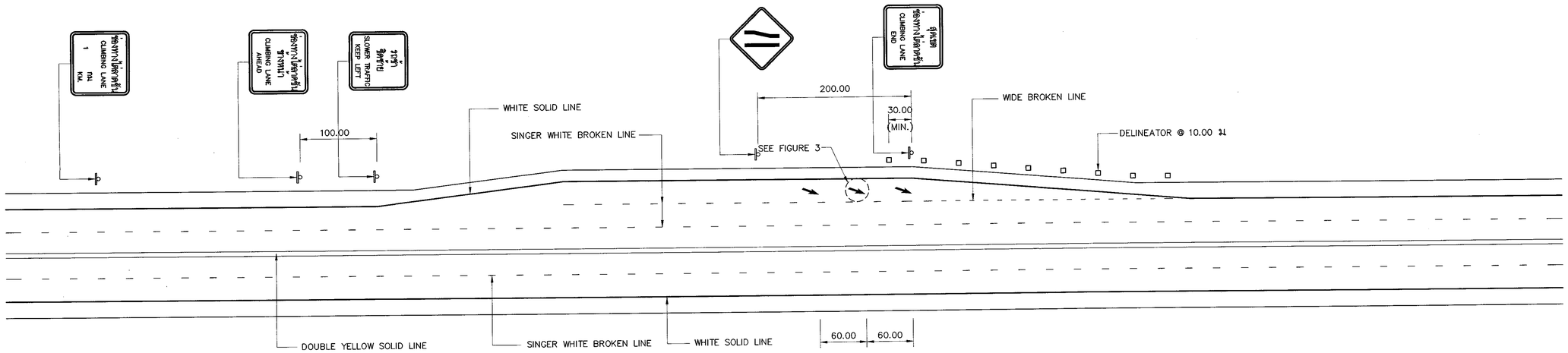

FIGURE 2 INSTALLATION TRAFFIC SIGN ON CLIMBING LANE FOR MULTI–LANE HIGHWAYS (ONLY LEFT SIDE OF TRAFFIC DIRECTION)

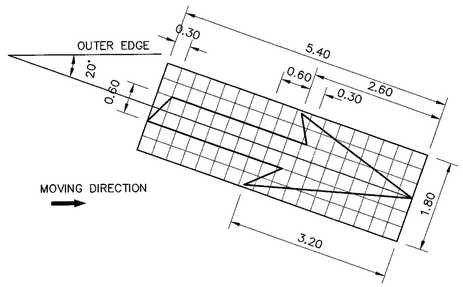

FIGURE 3 SHOW ARROW DETAIL

NOTE.

1. TRAFFIC MARKING OTHER THAN SPECIFY IN DRAWING SHALL BE FOLLOWED TRAFFIC CONTROL MARKING MANUAL.
2. TRAFFIC SIGN INSTALLATION OTHER THAN SPECIFY IN DRAWING SHALL BE FOLLOWED TRAFFIC CONTROL MARKING MANUAL.
3. DIMENSIONS ARE IN METER UNLESS OTHERWISE INDICATED.

REF.	REVISION	SIGNATURE	DATE

KINGDOM OF THAILAND
MINISTRY OF TRANSPORT
DEPARTMENT OF HIGHWAYS

STANDARD DRAWING
MINOR ROAD SIGN
ROAD SIGN AT CLIMBING LANE

DESIGNED : D.O.H. & CONSULTANTS	CHECKED : BUREAU OF LOCATION & DESIGN	DATE : OCT 2015
SUBMITTED : (DIRECTOR OF LOCATION & DESIGN BUREAU)		SCALE : AS SHOWN
APPROVED : (FOR DIRECTOR GENERAL)		DWG NO. RS–104
		SHEET NO. 54

D:\std dwg 2015\RS-104(REV00)

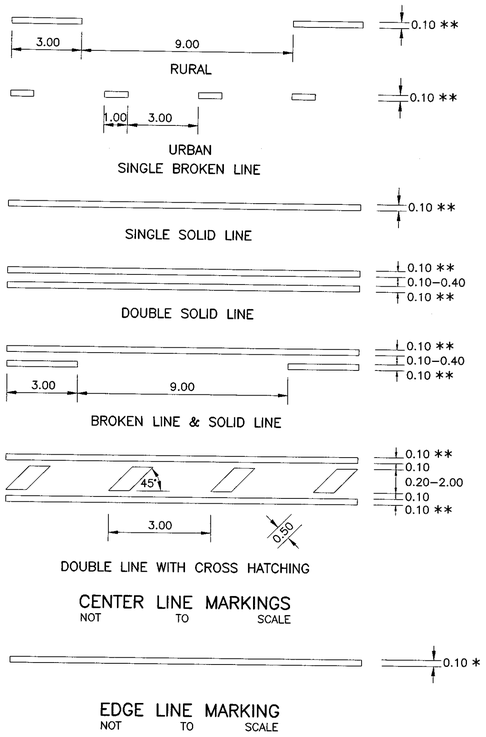

* STANDARD WIDTH IS 10 CM., FOR UNINTERRUPTED–FLOW HIGHWAY WITH ADT. IS MORE THAN 32,000 VEHICLE/DAY, THE WIDTH SHALL BE 15 CM.

** STANDARD WIDTH IS 10 CM., THE ADJUSTED WIDTH SHALL CONFORM TO THE TABLE 1.

TABLE 1 : WIDTH OF CENTER LINE MARKING

A. TWO–LANE HIGHWAY

ADT. (VEHICLE/ DAY)	WIDTH OF TRAVELLED WAY (METERS)	
	7.00 OR LESS	MORE THAN 7.00
4,000 OR LESS	0.10	0.10
MORE THAN 4,000	0.15	0.15
MORE THAN 8,000	0.15	0.20

B. MULTILANE UNDIVIDED HIGHWAY (DOUBLE SOLID LINE)

ADT. (VEHICLE/ DAY)	WIDTH OF TRAVELLED WAY (METERS)		
	LESS THAN 14.00 (1)	14.00	MORE THAN 14.00
MORE THAN 8,000	WIDTH 0.10	WIDTH 0.10	WIDTH 0.10
	GAP 0.10	GAP 0.10	GAP 0.10
MORE THAN 16,000	WIDTH 0.10	WIDTH 0.15	WIDTH 0.15
	GAP 0.10	GAP 0.15	GAP 0.15–0.60 (2)
MORE THAN 32,000	WIDTH 0.15	WIDTH 0.20	WIDTH 0.20
	GAP 0.15	GAP 0.20	GAP 0.20–0.80 (2)

C. MULTILANE DIVIDED HIGHWAY (SINGLE SOLID LINE)

ADT. (VEHICLE/ DAY)	WIDTH OF LINE MARKING (METERS)
32,000 OR LESS	0.10
MORE THAN 32,000	0.15

(1) FOR ULTIMATE STAGE WHICH THE TRAVELLED WAY WIDTH IS LESS THAN 13.00 METERS, THE CENTER LINE MARKINGS SHALL BE TWO–LANE HIGHWAY FORMAT.

(2) IF WIDTH OF GAP IS MORE THAN 40 CM., THE CENTER LINE MARKING SHALL BE DOUBLE LINE WITH CROSS HATCHING FORMAT.

NOTES :

1. ALL DIMENSIONS ARE IN METERS UNLESS OTHERWISE INDICATED.
2. ALL MARKINGS SHALL BE IN ACCORDANCE WITH THE DEPARTMENT OF HIGHWAYS' TRAFFIC CONTROL DEVICE MANUAL.
3. PAVEMENT MARKING FOR THE ASPHALTIC CONCRETE AND THE REINFORCED CONCRETE PAVEMENTS SHALL BE REFLECTORIZED THERMOPLASTIC PAINT, CONFORMING TO TIS. 542. PAVEMENT MARKINGS FOR THE SURFACE TREATMENT PAVEMENT SHALL BE REFLECTORIZED PAINT, CONFORMING TO TIS. 415 AND TIS. 543.

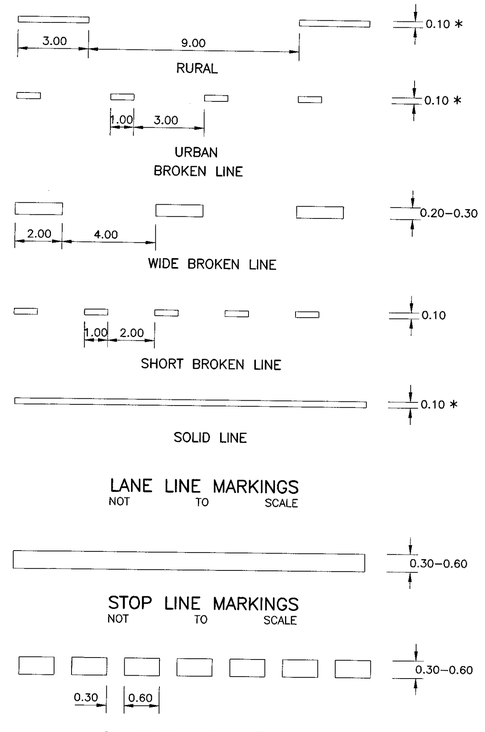

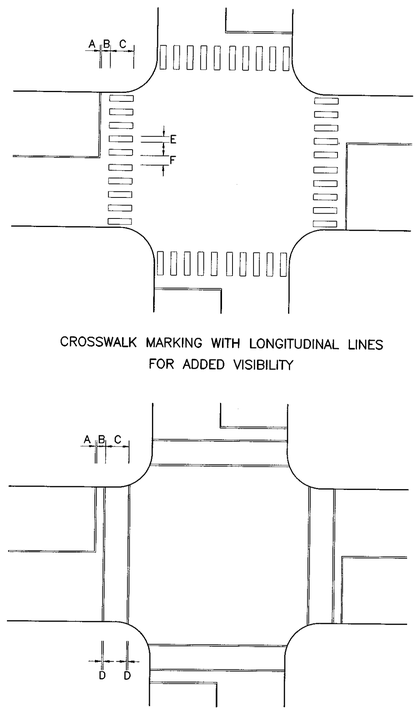

A = 0.30–0.60 M.
B = 1.00 M.
C = 2.00–4.00 M.
D = 0.5 A.
E = 0.60 M.
F = 0.80 M.

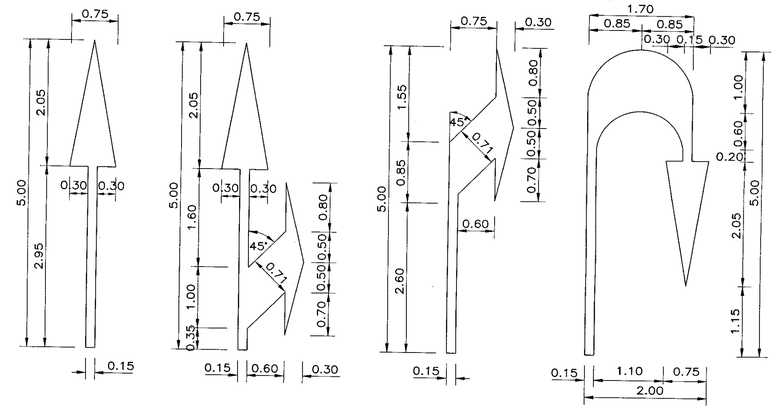

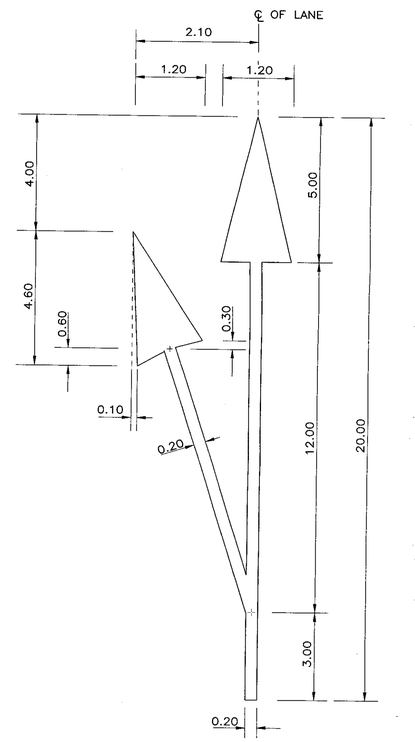

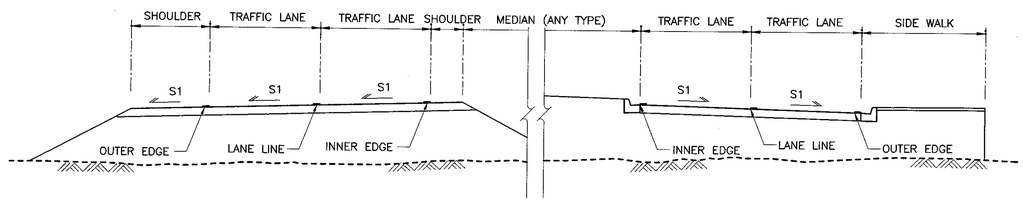

REF.	REVISION	SIGNATURE	DATE

KINGDOM OF THAILAND

MINISTRY OF TRANSPORT
DEPARTMENT OF HIGHWAYS

STANDARD DRAWING

TRAFFIC MARKING
MARKING DETAILS–I

DESIGNED : D.O.H. & CONSULTANTS	**CHECKED :** BUREAU OF LOCATION & DESIGN	**DATE :** OCT 2015
SUBMITTED : (DIRECTOR OF LOCATION & DESIGN BUREAU)		**SCALE :** AS SHOWN
APPROVED : (FOR DIRECTOR GENERAL)		**DWG NO.** RS–201
		SHEET NO. 55

P:\std dwg 2015\RS-201(REV00)

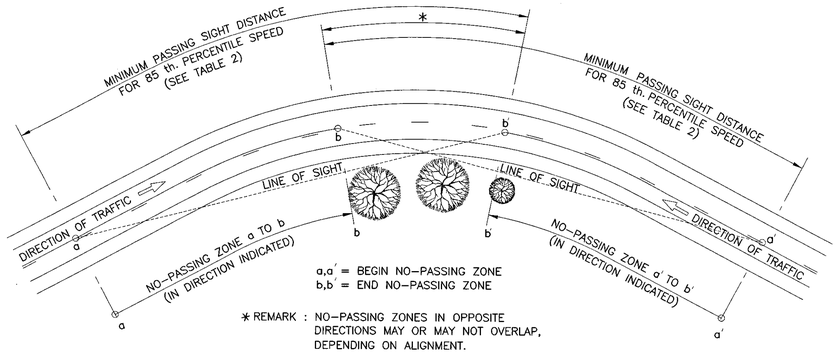

* REMARK : NO-PASSING ZONES IN OPPOSITE DIRECTIONS MAY OR MAY NOT OVERLAP, DEPENDING ON ALIGNMENT.

CENTER LINE MARKING FOR NO-PASSING ZONES AT HORIZONTAL CURVES

NOT TO SCALE

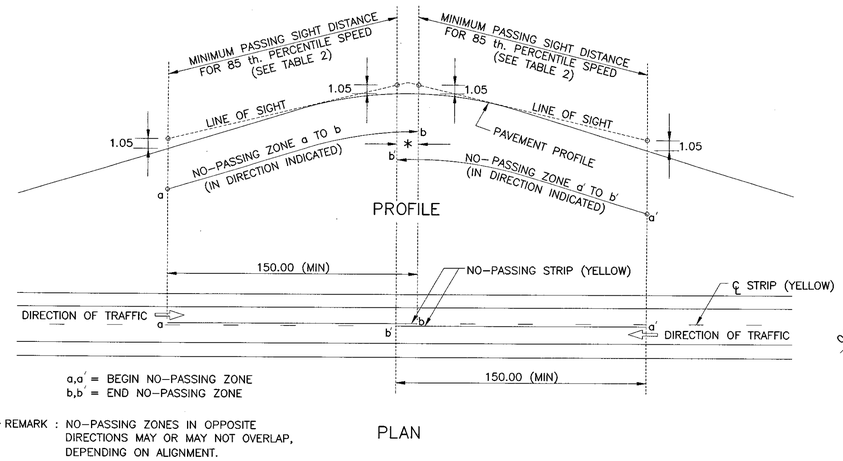

* REMARK : NO-PASSING ZONES IN OPPOSITE DIRECTIONS MAY OR MAY NOT OVERLAP, DEPENDING ON ALIGNMENT.

CENTER LINE MARKING FOR NO-PASSING ZONES AT VERTICAL CURVES

NOT TO SCALE

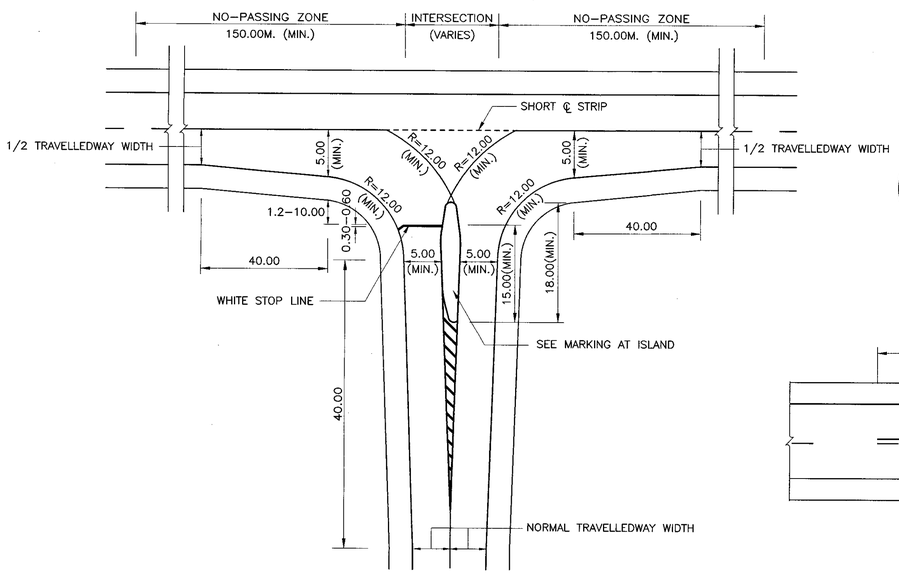

TYPICAL MARKING AT JUNCTION WITH DIVISIONAL ISLAND

NOT TO SCALE

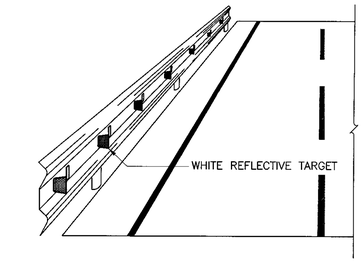

INSTALLATION REFLECTIVE TARGET ON GUARDRAIL

NOT TO SCALE

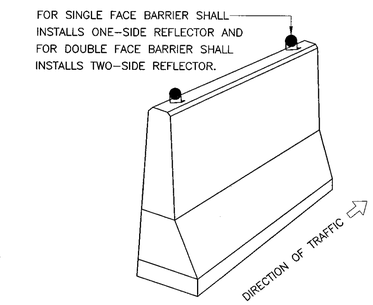

INSTALLATION REFLECTIVE TARGET ON BARRIER

NOT TO SCALE

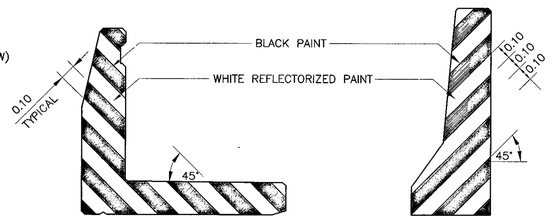

MARKING AT ENDS OF BRIDGE BARRIER

NOT TO SCALE

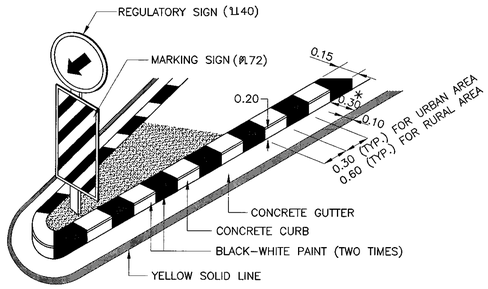

* THE WIDTH MAY BE 0.50 M.

PAINT MARKING ON CONCRETE CURB

NOT TO SCALE

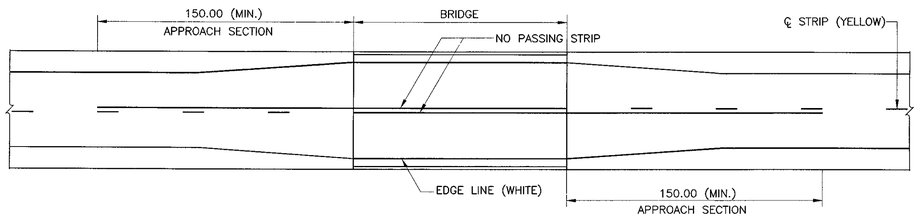

MARKING AT BRIDGE APPROACH

NOT TO SCALE

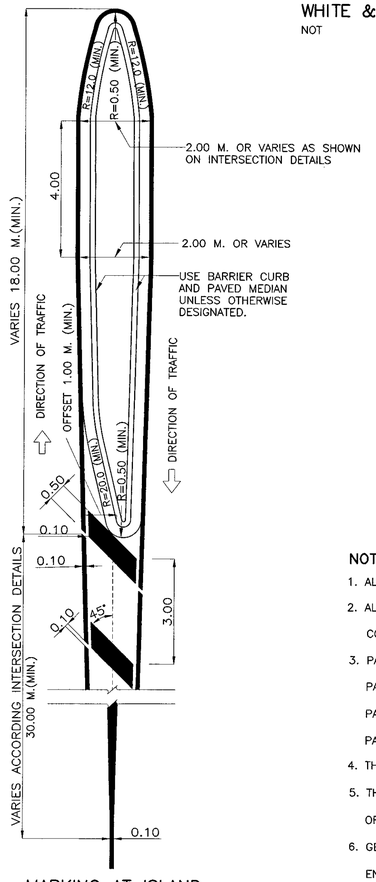

MARKING AT ISLAND

NOT TO SCALE



INSTALLATION REFLECTIVE TARGET ON CURB MEDIAN

NOT TO SCALE



WHITE & YELLOW REFLECTIVE TARGET

NOT TO SCALE

TABLE 1 SPACING OF REFLECTIVE TARGET

REDIUS OF CURVE (METER)	SPACING OF REFLECTIVE TARGET (METER)
	INNER CURVE (S)
15	6
75	13
100	16
150	20
200	23
300	29
400	33
500	37

FOR VERTICAL CURVE SECTION AND STRAIGHT ROADWAY SECTION THE SPACING SHALL BE EVERY 24 METERS.

TABLE 2 MINIMUM PASSING SIGHT DISTANCE

85 th. PERCENTILE SPEED (KPH.)	MINIMUM PASSING SIGHT DISTANCE (METER)
40	140
50	160
60	180
70	210
80	245
90	280
100	320
110	355
120	395

NOTES :

1. ALL DIMENSIONS ARE IN METERS UNLESS OTHERWISE INDICATED.
2. ALL MARKINGS SHALL BE IN ACCORDANCE WITH THE DEPARTMENT OF HIGHWAYS' TRAFFIC CONTROL DEVICE MANUAL.
3. PAVEMENT MARKING FOR THE ASPHALTIC CONCRETE AND THE REINFORCED CONCRETE PAVEMENTS SHALL BE REFLECTORIZED THERMOPLASTIC PAINT, CONFORMING TO TIS. 542. PAVEMENT MARKINGS FOR THE SURFACE TREATMENT PAVEMENT SHALL BE REFLECTORIZED PAINT, CONFORMING TO TIS. 415 AND TIS. 543.
4. THIS DRAWING SHALL BE REFERENCED TO DRAWING NO. RS-201.
5. THE COLOUR OF REFLECTIVE TARGET SHALL BE IN ACCORDANCE WITH THE COLOUR OF TRAFFIC LINE.
6. GEOMETRY OF REFLECTIVE TARGET IS ABLE TO ADJUST UNDER THE APPROVAL OF THE ENGINEER, BUT SURFACE OF RETRO-REFLECTION NOT LESS THAN 78 SQUARE CENTIMETERS AND CONFORMING TO TIS. 606 TYPE 9 (COEFFICIENT OF RETRO-REFLECTION LEVEL 9).
7. INSTALLATION OF REFLECTIVE TARGET, FOR HORIZONTAL ANGLE SHALL BE VARIED 0 TO 30 DEGREE (RECOMMENDED 15 DEGREE) AND FOR VERTICAL ANGLE SHALL BE VARIED -10 TO 10 DEGREE (RECOMMENDED ±5 DEGREE) WHICH ARE ABLE TO ADJUST UNTIL THE BEST REFLECTION UNDER THE APPROVAL OF THE ENGINEER.

KINGDOM OF THAILAND

MINISTRY OF TRANSPORT
DEPARTMENT OF HIGHWAYS

STANDARD DRAWING

TRAFFIC MARKING MARKING DETAILS-II

DESIGNED : D.O.H. & CONSULTANTS	CHECKED : BUREAU OF LOCATION & DESIGN		DATE : OCT 2015
SUBMITTED : (DIRECTOR OF LOCATION & DESIGN BUREAU)			SCALE : AS SHOWN
APPROVED : (FOR DIRECTOR GENERAL)			DWG NO. RS-202
			SHEET NO. 56

REF.	REVISION	SIGNATURE	DATE

D:\std dwg 2015\RS-202(REV00)

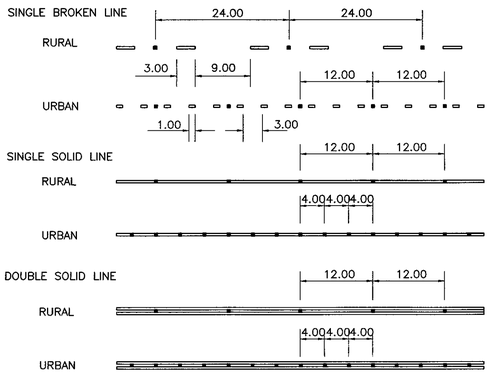

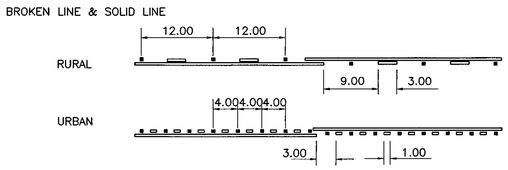

ROAD STUD AT CENTER LINE OF ROADWAY
NOT TO SCALE

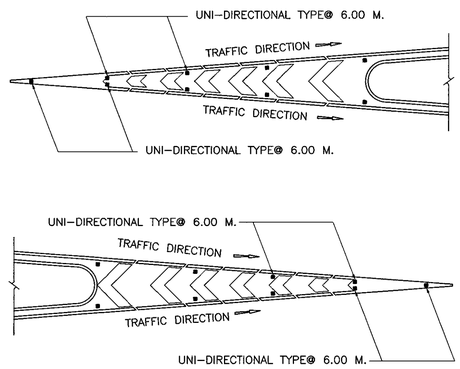

ROAD STUD AT ISLAND
NOT TO SCALE

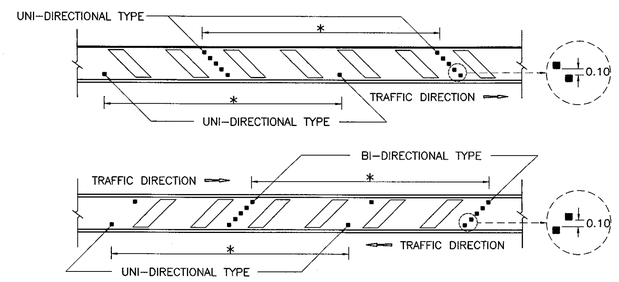

ROAD STUD AT CROSS HATCHING
NOT TO SCALE

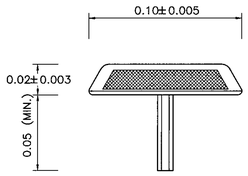

SIDE ELEVATION OF ROAD STUD
NOT TO SCALE

*** ROAD STUD INSTALLATION AT CROSS HATCHING**

IN CASE OF GENERAL SHALL BE INSTALLED EVERY 24 M. SPACING.
IN CASE OF THE BEGINNING, THE END AND ON CURVE WITH RADIUS LESS THAN 400 M. SHALL BE INSTALLED EVERY 12 M. SPACING.

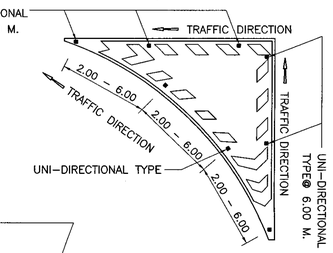

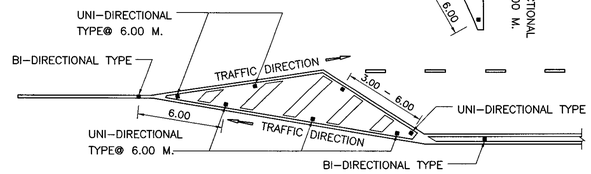

ROAD STUD AT ISLAND MARKINGS
NOT TO SCALE

TABLE 1 INSTALLATION OF ROAD STUD ON TANGENT

TYPE OF LINE	SPACING OF ROAD STUD (M.)		LOCATION
	RURAL	URBAN	
CENTER LINE			
SINGLE BROKEN LINE	24.00	12.00	BETWEEN BROKEN LINE
SINGLE SOLID LINE	12.00	4.00	ON SOLID LINE
DOUBLE SOLID LINE	12.00	4.00	BETWEEN DOUBLE SOLID
DOUBLE BROKEN LINE WITH SOLID LINE	12.00	4.00	BETWEEN DOUBLE LINE AND SOLID LINE
LANE LINE			
BROKEN LINE	24.00	12.00	BETWEEN BROKEN LINE
SOLID LINE	12.00	6.00	ON SOLID LINE
EDGE LINE			
INSIDE EDGE LINE	24.00	12.00	NEXT TO THE RIGHT OF SOLID LINE
OUTSIDE EDGE LINE	48.00	24.00	NEXT TO THE LEFT OF SOLID LINE

TABLE 2 INSTALLATION OF ROAD STUD ON CURVE

TYPE OF LINE	SPACING OF ROAD STUD (M.)		LOCATION
	RADIUS (M.) LESS THAN 100	RADIUS (M.) 100–300	
CENTER LINE			
SINGLE BROKEN LINE	–	12.00	BETWEEN BROKEN LINE
SINGLE SOLID LINE	4.00	12.00	ON SOLID LINE
DOUBLE SOLID LINE	4.00	12.00	BETWEEN DOUBLE SOLID
DOUBLE BROKEN LINE WITH SOLID LINE	4.00	12.00	BETWEEN DOUBLE LINE AND SOLID LINE
LANE LINE			
BROKEN LINE	–	12.00	BETWEEN BROKEN LINE
SOLID LINE	4.00	12.00	ON SOLID LINE
EDGE LINE			
INSIDE EDGE LINE	4.00	12.00	NEXT TO THE RIGHT OF SOLID LINE
OUTSIDE EDGE LINE	4.00	12.00	NEXT TO THE LEFT OF SOLID LINE

NOTES :

1. ALL DIMENSIONS ARE IN METERS UNLESS OTHERWISE INDICATED.
2. ROAD STUD SHALL BE MADE OF ALUMINIUM OR ALUMINIUM ALLOY WHICH CONFORM TO TIS. 2573. AND ROAD STUD SHALL WITHSTAND TO IMPACT LOAD WITHOUT DISTORTION OR CRACK.
3. REFLECTOR SHALL BE YELLOW OR WHITE REFLECTIVE BEADS WHICH MANUFACTURED EXCLUSIVELY FOR REFLECTOR. AMOUNT OF BEADS SHALL BE NOT LESS THAN 50 PER SIDE AND EMBEDDED TO THE ROAD STUD.
4. THE PROCEDURES OF ROAD STUDS INSTALLATION.
   - 4.1 THE HOLE SHALL BE DRILLED WIDER THAN DIAMETER OF THE SHANK ABOUT 3 MM.
   - 4.2 MATERIALS IN THE HOLE SHALL BE REMOVED.
   - 4.3 EPOXY ADHESIVE SHALL BE APPLIED FULLY INTO THE HOLE.
   - 4.4 THE SHANK SHALL BE EMBEDED INTO THE HOLE. THE ROAD STUD SHALL BE PRESSED UNTIL EPOXY ADHESIVE SHALL BE BLEEDED TO ADHERE BETWEEN PAVEMENT SURFACE AND ROAD STUD.
5. ROAD STUDS AT CENTER LINE OF ROADWAY SHALL BE BI–DIRECTIONAL TYPE OTHERS SHALL BE UNI–DIRECTIONAL TYPE.
6. THE COLOUR OF REFLECTOR SHALL BE IN ACCORDANCE WITH THE COLOUR OF TRAFFIC LINE.
7. ROAD STUDS SHALL BE INSTALLED AT LOCATION BEFORE PC. STATION OF CURVE AND AFTER PT. STATION OF CURVE APPROXIMATE 65 METERS.
8. INSTALLATION OF ROAD STUDS IN CURVE WITH RADIUS MORE THAN 300 METERS SHALL BE INSTALLED AS TANGENT INSTALLATION.
9. IN CASE OF EDGE LINE, THE ROAD STUD SHALL BE INSTALLED NEXT TO THE LEFT OR NEXT TO THE RIGHT OF SOLID LINE WITH LATERAL OFFSET IS APPROXIMATE 2.5–5.0 CENTIMETERS.
10. THE SIZE OF ROAD STUD MUST NOT BE EXCEED THE TRAFFIC LINE.

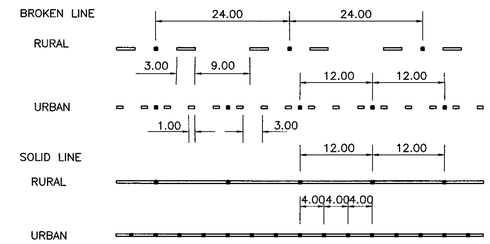

ROAD STUD AT LANE LINE & EDGE LINE
NOT TO SCALE

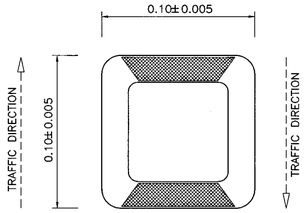

PLAN OF BI–DIRECTIONAL TYPE ROAD STUD
NOT TO SCALE

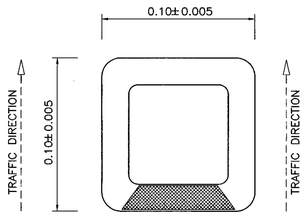

PLAN OF UNI–DIRECTIONAL TYPE ROAD STUD
NOT TO SCALE

KINGDOM OF THAILAND

MINISTRY OF TRANSPORT
DEPARTMENT OF HIGHWAYS

STANDARD DRAWING

TRAFFIC MARKING
ROAD STUD

DESIGNED : D.O.H. & CONSULTANTS	**CHECKED :** BUREAU OF LOCATION & DESIGN		**DATE :** OCT 2015
SUBMITTED :	(DIRECTOR OF LOCATION & DESIGN BUREAU)		**SCALE :** AS SHOWN
			DWG NO. RS–203
APPROVED :	(FOR DIRECTOR GENERAL)		**SHEET NO.** 57

REF.	REVISION	SIGNATURE	DATE

D:\std dwg 2015\RS-203(REV00)



(ตค.1)

(ตค.2)



(ตค.3)

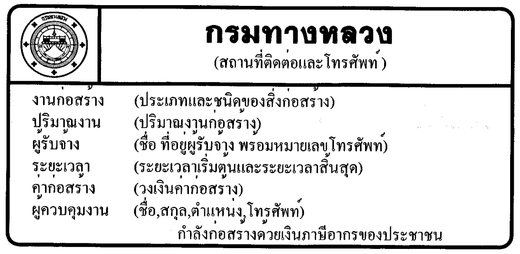

ป้ายโครงการก่อสร้าง

ROAD SIGNS MOUNTING AT BEGINNING AND END OF PROJECT
NOT TO SCALE

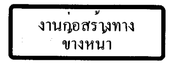

(ตค.4)



(ตค.5)

FOR MOUNTING DISTANCE OVER 300 M.
CHANGE WORDING "ข้างหน้า" to "1 กม."
OR "500 ม." RO AS MOUNTING DISTANCE

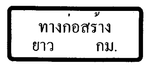

(ตค.25)



(ตค.26)

ROAD SIGNS MOUNTING AT OPENING AND END OF WORK SITE
NOT TO SCALE



(ตค.22)

TEMPORARY ROAD GUIDE SIGN
NOT TO SCALE



(ต.7)



(ต.8)



(ต.24)



(ต.22)



(ต.35)



(ต.36)



(ตค.5)

ทางปิด
ข้างหน้า

(ตค.6)

ทางเบี่ยง
ซ้าย

(ตค.8)



(ตค.6)

ทางเบี่ยง
ขวา

(ตค.9)



(ต.28)

มีกองวัสดุ
บนไหลทาง

(ตค.13)

ขางขาด
ขางหนา

(ตค.14)



(ตก.1)



(ตก.3)



(ตก.4)

WARNING SIGNS MOUNTING AT APPROACHING WORKING SITE
NOT TO SCALE



(น.3)



(น.4)



(น.5)



(น.29)



(น.40)



(น.41)



(น.32)



(คส.16)

SIGNS TO CONTROL SPEED
NOT TO SCALE

TRAFFIC SIGN CONTROLLED PATTERN		SIZE (CM.)	LETTER SIZE 1 ST ROW	LETTER SIZE 2 ND ROW	TRAFFIC SIGN CONTROLLED PATTERN	REFLECTORIZED PROPERTIES	COLOUR ON BOARD
ROAD SIGNS MOUNTING AT BEGINNING AND END OF PROJECT	ป้ายโครงการก่อสร้าง – งานขนาดใหญ่	240 x 480,	FOR "กรมทางหลวง" 20	AND OTHER 10	MOUNTING AT BEGINNING OF PROJECT ALL LETTER IS WHITE COLOUR		BLUE
	ตรากรมทางหลวง	60					
	– งานขนาดเล็ก	120 x 240	"กรมทางหลวง" 10	OTHER 5			
	ตรากรมทางหลวง	30					
	ตค.1	90 x 240	20	20	FOR EXISTING ROAD CONSTRUCTION	REFLECT	RED–ORANGE
	ตค.2	150 x 360	20	20	FOR NEW ROAD CONSTRUCTION THAT ALLOWS SOME TRAFFIC	REFLECT	RED–ORANGE
	ตค.3	90 x 360	20	20	FOR NEW ROAD CONSTRUCTION THAT ALLOWS SOME TRAFFIC	REFLECT	RED–ORANGE
ROAD SIGNS MOUNTING AT OPENING WORK SITE	ตค.4	90 x 240	20	20	MOUNTING AT 200 M. BEFORE APPROACHING	REFLECT	RED–ORANGE
	ตค.5	90 x 240	20	20	MOUNTING AT 200 M. BEFORE APPROACHING	REFLECT	RED–ORANGE
	ตค.25	90 x 180	20	20	MOUNTING AT 200 M. BEFORE APPROACHING	REFLECT	RED–ORANGE
	ตค.26	90 x 180	20	20	MOUNTING AT END OF WORK SITE	REFLECT	RED–ORANGE
TEMPORARY ROAD GUIDE SIGNS	ตค.22	90 x 135	10	10	MOUNTING WITH ตค.20 OR ตค.21 SIGN BOARD		WHITE
WARNING SIGN MOUNTING AT APPROACHING WORK SITE	ต.7	90 x 90	–	–	MOUNTING AT 200–250 M. BEFORE APPROACHING	REFLECT	RED–ORANGE
	ต.8	90 x 90	–	–	MOUNTING AT 200–250 M. BEFORE APPROACHING	REFLECT	RED–ORANGE
	ต.24	90 x 90	–	–	MOUNTING AT 200–250 M. BEFORE APPROACHING	REFLECT	RED–ORANGE
	ต.22	90 x 90	–	–	MOUNTING AT 200–250 M. BEFORE APPROACHING	REFLECT	RED–ORANGE
	ต.35	90 x 90	–	–	MOUNTING AT 200–250 M. BEFORE APPROACHING	REFLECT	RED–ORANGE
	ต.36	90 x 90	–	–	MOUNTING AT 200–250 M. BEFORE APPROACHING	REFLECT	RED–ORANGE
	ตค.6	90 x 120	20	15	MOUNTING AT 300 M. BEFORE APPROACHING	REFLECT	RED–ORANGE
	ตค.5	90 x 90	–	–	MOUNTING AT 150 M. BEFORE APPROACHING	REFLECT	RED–ORANGE
	ตค.8	75 x 75	25	25	MOUNTING AT 150 M. BEFORE APPROACHING	REFLECT	RED–ORANGE
	ตค.6	90 x 90	–	–	MOUNTING AT 150 M. BEFORE APPROACHING	REFLECT	RED–ORANGE
	ตค.9	75 x 75	25	25	MOUNTING AT 150 M. BEFORE APPROACHING	REFLECT	RED–ORANGE
	ตก.4	90 x 90	–	–	MOUNTING AT 150 M. BEFORE APPROACHING	REFLECT	RED–ORANGE
	ตค.13	60 x 135	15	15	MOUNTING NEAR AND SAME SIDE OF STOCKPILE MATERIAL		RED–ORANGE
	ตก.3	90 x 90	–	–	MOUNTING AT 150 M. BEFORE APPROACHING	REFLECT	RED–ORANGE
	ตก.1	90 x 90	–	–	MOUNTING AT 150 M. BEFORE APPROACHING	REFLECT	RED–ORANGE
	ต.28	90 x 90	–	–	MOUNTING AT 200–250 M. BEFORE APPROACHING	REFLECT	YELLOW
	ตค.14	90 x 135	20	15	FOR EMERGENCY CASE MOUNTING ON BARRICADE	REFLECT	RED–ORANGE
SIGNS TO CONTROL SPEED	น.3	90	–	–	MOUNTING ON CONTROLLED PIONT OR NEARER IN DISTANCE 3–5 M.	REFLECT	WHITE
	น.4	90	–	–	MOUNTING ON CONTROLLED PIONT OR NEARER IN DISTANCE 3–5 M.	REFLECT	WHITE
	น.5	75	–	–	MOUNTING ON CONTROLLED PIONT OR NEARER IN DISTANCE 3–5 M.	REFLECT	RED
	น.29	75	–	–	MOUNTING ON CONTROLLED PIONT OR NEARER IN DISTANCE 3–5 M.	REFLECT	BLUE
	น.40	75	–	–	MOUNTING ON CONTROLLED PIONT OR NEARER IN DISTANCE 3–5 M.	REFLECT	BLUE
	น.41	75	–	–	MOUNTING ON CONTROLLED PIONT OR NEARER IN DISTANCE 3–5 M.	REFLECT	BLUE
	น.32	90	25	–	MOUNTING BEFORE APPROACHING CONTROLLED SPEED ZONE	REFLECT	WHITE
	คส.16	60 x 60	20	15	MOUNTING WHERE ROAD CONDITION ALLOWS TO THE INDICATED SPEED	REFLECT	RED–ORANGE

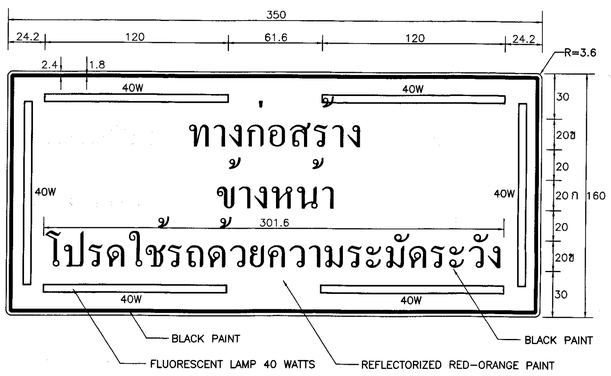

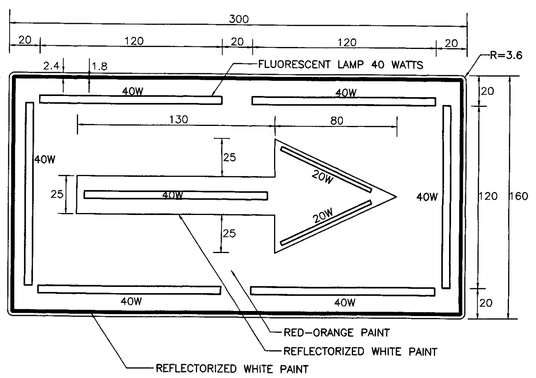

NOTE :

1. ALL DIMENSIONS ARE IN CENTIMETERS UNLESS OTHERWISE INDICATED.
2. THE SIGNS WITH FLUORESCENT LAMP SHALL BE MOUNTED FOR ROAD WHICH ADT EXCEEDS 4,000 VEHICLE/DAY.
3. REFLECTIVE SHEETING SHALL CONFORM TO TIS. 606 TYPE 1 (COEFFICIENT OF RETRO–REFLECTION LEVEL 1)
4. THIS DRAWING IS GUIDANCE ONLY, ALL OF SIGNS SHALL BE USED THE MANUAL OF TRAFFIC CONTROL DEVICES AS PUBLISHED BY THE DOH.

REF.	REVISION	SIGNATURE	DATE

KINGDOM OF THAILAND
MINISTRY OF TRANSPORT
DEPARTMENT OF HIGHWAYS

STANDARD DRAWING

TRAFFIC CONTROL DEVICES FOR HIGHWAY UNDER CONSTRUCTION
TRAFFIC SIGN AND DEVICES–I

DESIGNED : D.O.H. & CONSULTANTS	CHECKED : BUREAU OF LOCATION & DESIGN	DATE : OCT 2015
SUBMITTED : (DIRECTOR OF LOCATION & DESIGN BUREAU)		SCALE : AS SHOWN
APPROVED : (FOR DIRECTOR GENERAL)		DWG NO. RS–301
		SHEET NO. 58

D:\std dwg 2015\RS-301(REV00)

AUTOMATIC FLASHER 15 CM. BULB OR EQUIVALENT FOR ROAD WHICH ADT EXCEEDS 8,000 VEHICLE/DAY

9-YELLOW REFLECTORIZED CIRCLES TARGET FOR ROAD WHICH ADT EXCEEDS 4,000 VEHICLE/DAY

SIGNS TO INDICATE ROAD OBSTRUCTION
NOT TO SCALE

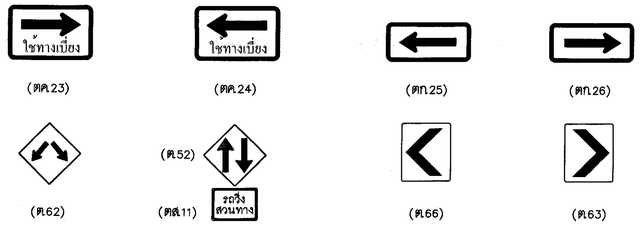

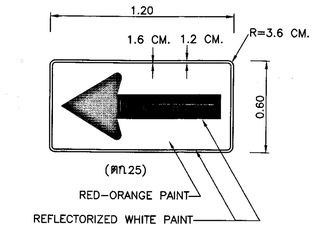

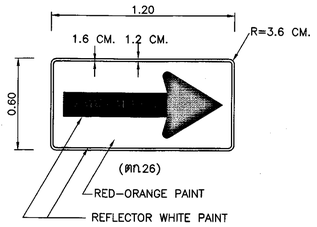

TRAFFIC SIGN CONTROLLED PATTERN		SIZE (CM.)	LETTER SIZE 1ST ROW	LETTER SIZE 2ND ROW	RECOMMENDED LOCATION	REFLECTORIZED PROPERTIES	COLOUR ON BOARD
ROAD SIGNS MOUNTING AT TRAFFIC LINE CHANGE OR TRAFFIC CONTROL ARE REQUIRED	ศค.23	80x120	15		WHERE SIGN BOARD IS VISIBLE WITH NOT LESS THAN 200 M.	REFLECT	RED-ORANGE
	ศค.24	80x120	15		WHERE SIGN BOARD IS VISIBLE WITH NOT LESS THAN 200 M.	REFLECT	RED-ORANGE
	ศก.25	60x120	–	–	MOUNTING WHERE TRAFFIC LINE CHANGE	REFLECT	RED-ORANGE
	ศก.26	60x120	–	–	MOUNTING WHERE TRAFFIC LINE CHANGE	REFLECT	RED-ORANGE
	ศ.52	90x90	–	–	MOUNTING AT BEGINNING OF TWO-WAY TRAFFIC	REFLECT	RED-ORANGE
	ศ.11	40x60	15ก	–	MOUNTING AT BEGINNING OF TWO-WAY TRAFFIC	REFLECT	RED-ORANGE
	ศ.62	90x90	–	–	MOUNTING WHERE BOTH LEFT AND RIGHT TRAFFICS ARE PERMITTED	REFLECT	RED-ORANGE
	ศ.66	60x75	–	–	MOUNTING AT HORIZONTAL CURVE	REFLECT	RED-ORANGE
	ศ.63	60x75	–	–	MOUNTING AT HORIZONTAL CURVE	REFLECT	RED-ORANGE
TRAFFIC CHANNELIZATION INSTRUMENTS	CONE OR POST	–	–	–	TO INDICATE TRAFFIC LINE OR SIDE ROAD OBSTRUCTION LINE, MOUNTING @ 30 M.(MAX.) INTERVAL		
	VERTICAL PANEL	–	–	–	TO INDICATE TRAFFIC LINE OR SIDE ROAD OBSTRUCTION LINE		
	BARREL RAIL LIGHTING	–	–	–	FOR ROAD WHICH ADT EXCEEDS 8,000 VEHICLE/DAY		
SIGNS TO INDICATE ROAD OBSTRUCTION	FLASHER	–	–	–	FOR ROAD WHICH ADT EXCEEDS 8,000 VEHICLE/DAY		
	9 YELLOW REFLECTORIZED CIRCLES TARGET	7.5x7.5	–	–	FOR ROAD WHICH ADT EXCEEDS 4,000 VEHICLE/DAY		
BARRICADE	SIDE ROAD BARRICADE TO REDUCE SPEED	–	–	–	MOUNTING WITH SPACING 50-100 M. APPROXIMATE, TAPERING TO PAVEMENT EDGE		

ROAD SIGN MOUNTING AT TRAFFIC LINE CHANGE OR TRAFFIC CONTROL
NOT TO SCALE

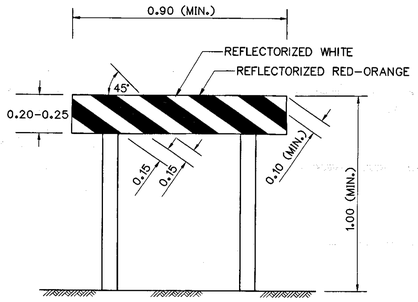

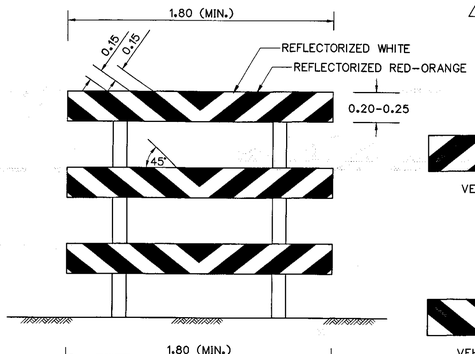



VEHICLE CAN GET THROUGH IN LEFT WAY

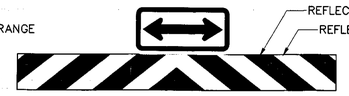

VEHICLE CAN GET THROUGH IN BOTH WAY



VEHICLE CAN GET THROUGH IN RIGHT WAY

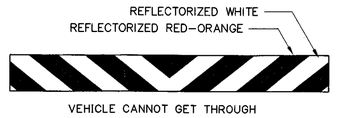

VEHICLE CANNOT GET THROUGH

NOTES:
1. ALL DIMENSIONS ARE IN METERS UNLESS OTHERWISE INDICATED.
2. REFLECTORIZED PROPERTIES MEANS: SIGN BOARD WHICH REFLECTING BY REFLECTIVE SHEETING OR REFLECTIVE BEADS OR OTHERS UNDER THE APPROVAL OF THE ENGINEER.
3. SIZE OF WARNING SIGN CODE ศก.25 AND ศก.26 MAY BE INCREMENTED AT SUITABLE SIZE ON HIGH SPEED AND HEAVY TRAFFIC ROAD UNDER THE APPROVAL OF THE ENGINEER.
4. REFLECTIVE SHEETING SHALL CONFORM TO TIS. 606 TYPE 1. (COEFFICIENT OF RETRO-REFLECTION LEVEL 1)

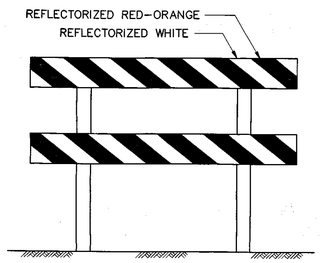

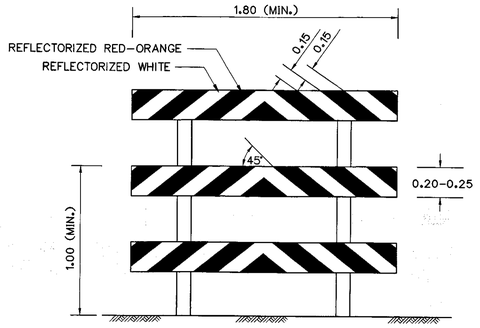

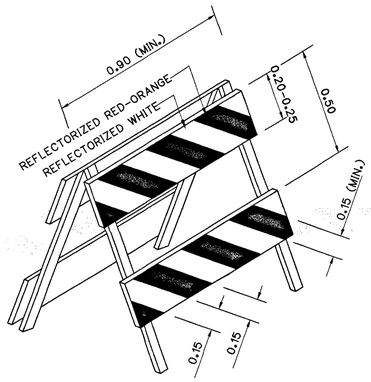

BARRICADE TYPE I
NOT TO SCALE

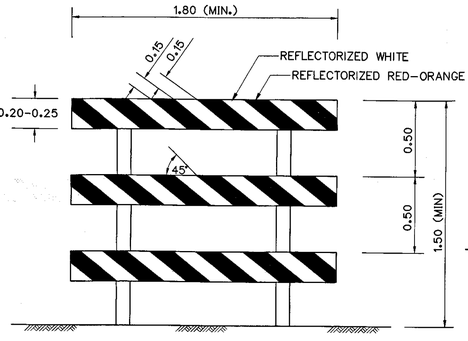

BARRICADE TYPE II
NOT TO SCALE

FOR BARRICADE TYPE I, II
- REFLECTORIZED CIRCLES TARGET OR FLASHER DEPENDED ON TRAFFIC VOLUME, MOUNTING AT THE LAST CORNER.
- FOR MOUNTING, THE PAINTED STRIPE SHALL BE INCLINED TO APPROACH TRAFFIC SIDE.

TYPE OF USE

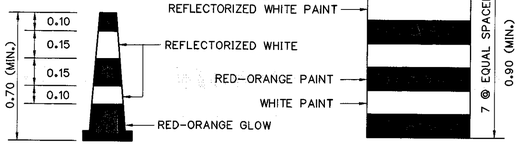

CONE BARREL

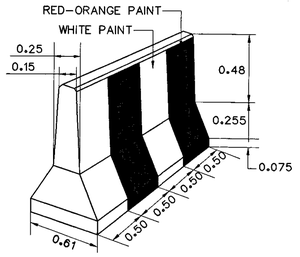

CONCRETE BARRIER

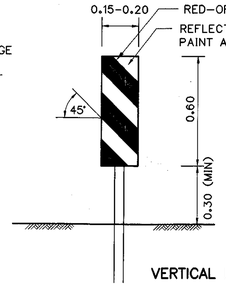

VERTICAL PANEL

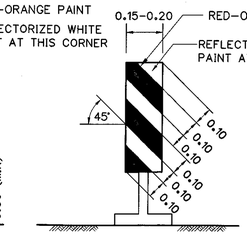

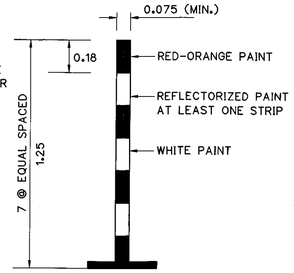

POST

TRAFFIC CHANNELIZATION INSTRUMENT TO BE USED
1. TO INDICATE SIDE ROAD HAZARD, VERTICAL PANEL OR BARREL SHALL BE INSTALLED BEFORE CONES, POSTS, VERTICAL PANELS, OR BARRELS FOLLOW ON THE LINE.
2. FOR ROAD WHICH ADT EXCEEDS 8,000 VEHICLE/DAY, RAIL LIGHTING SHALL BE REQUIRED ON TRAFFIC CHANNELIZATION INSTRUMENT POSITIONS.

TRAFFIC CHANNELIZATION INSTRUMENTS
(RED-ORANGE PAINT OR RED-ORANGE PAINT ALTERNATE WITH WHITE PAINT)

PROVISION:
1. TRAFFIC CONTROL DEVICES FOR HIGHWAYS UNDER CONSTRUCTION SHALL BE IN ACCORDANCE WITH THIS DRAWING AND THE MANUAL OF TRAFFIC CONTROL DEVICES AS PUBLISHED BY THE DOH.
2. SIGN BOARD FOR REFLECTORIZED SHALL BE METAL OR NON-METAL WHICH TOLERANCE TO ALL CLIMATES ALONG TERM OF CONTRACT UNDER THE APPROVAL OF THE ENGINEER.
3. THE AMOUNTS (IN TWO DIRECTIONS) AND SPACING OF WARNING SIGN BEFORE CONSTRUCTION AREA BESIDES OF THE NORMAL SIGNS ARE SHOWN IN THE TABLE BELOW.

CLASSIFICATION OF HIGHWAYS	WARNING SIGN SPACING BEFORE APPROACHING DIVERTED POINT (M.)	
	REDUCED TRAFFIC LANE OR DIVERTED TRAFFIC LANE	SIDE ROAD OBSTRUCTION
EXPRESSWAY AND MAJOR RURAL HIGHWAY	500-1000 (2-3)	300-500 (2)
RURAL HIGHWAY	200-300 (2)	150-200 (1)
URBAN HIGHWAY	70-100 (1)	–

4. FOR URBAN HIGHWAY WITH AMOUNT OF PEDESTRIANS, WALKWAY WHICH SAFETY SHALL BE PROVIDED FOR PEDESTRIANS.
5. THE CONTRACTOR SHALL BE PROVIDED THE TRAFFIC CONTROL DEVICES FOR HIGHWAYS UNDER CONSTRUCTION ALL ITEMS.
6. IN CASE OF THE FORMAT IS NOT THE SAME AS THE DRAWINGS, THE MOUNTING OF TRAFFIC CONTROL DEVICES SHALL BE DIRECTED BY THE ENGINEER.

REF.	REVISION	SIGNATURE	DATE

KINGDOM OF THAILAND
MINISTRY OF TRANSPORT
DEPARTMENT OF HIGHWAYS

STANDARD DRAWING

TRAFFIC CONTROL DEVICES FOR HIGHWAY UNDER CONSTRUCTION
TRAFFIC SIGN AND DEVICES-II

DESIGNED : D.O.H. & CONSULTANTS	CHECKED : BUREAU OF LOCATION & DESIGN	DATE : OCT 2015
SUBMITTED : (DIRECTOR OF LOCATION & DESIGN BUREAU)		SCALE : AS SHOWN
APPROVED : (FOR DIRECTOR GENERAL)		DWG NO. RS-302
		SHEET NO. 59

D:\std dwg 2015\RS-302(REV00)

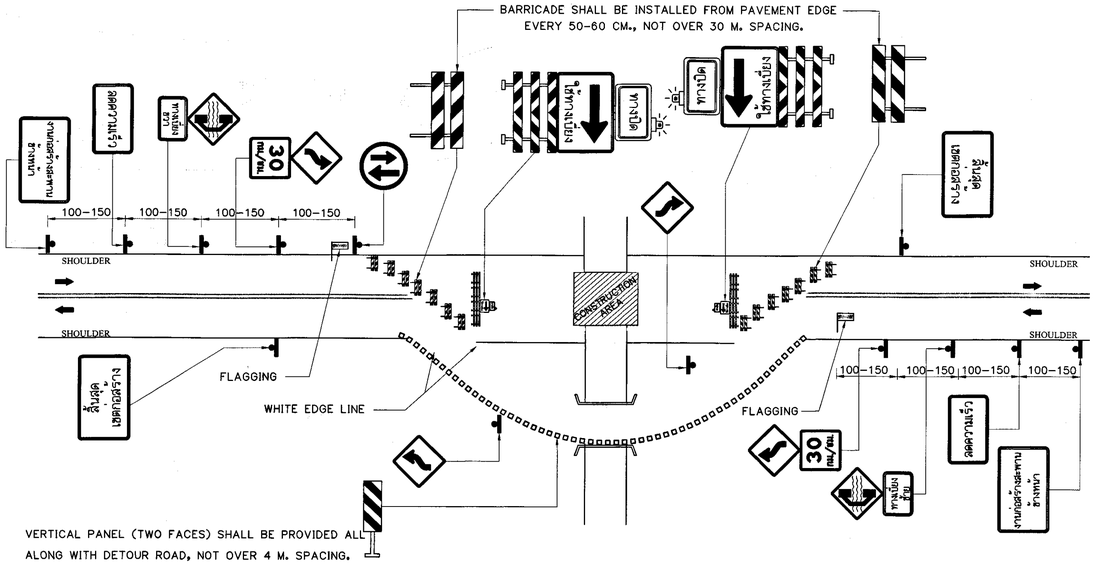

DETOUR BRIDGE OR ONE-LANE DETOUR ROAD
NOT TO SCALE

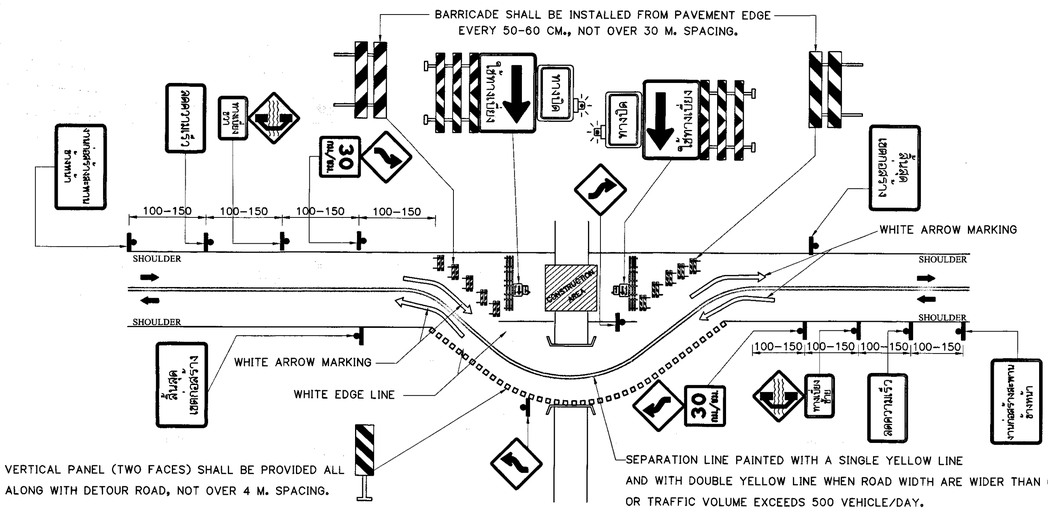

DETOUR BRIDGE OR TWO-LANE DETOUR ROAD
NOT TO SCALE

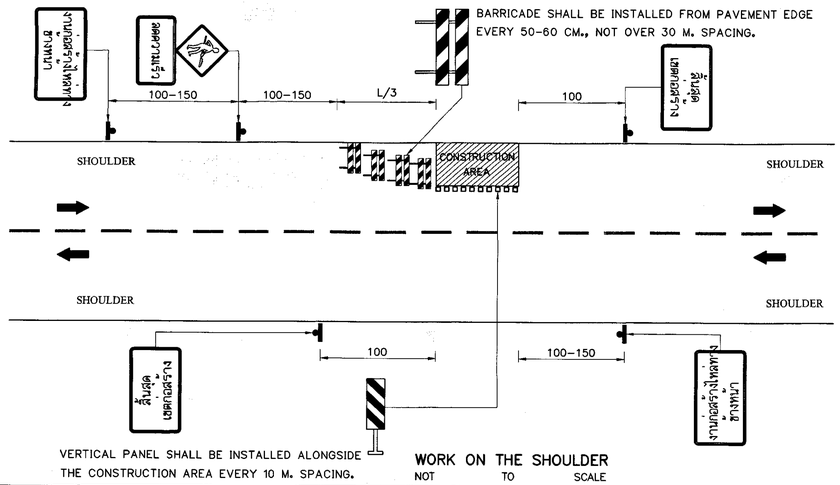

WORK ON THE SHOULDER
NOT TO SCALE

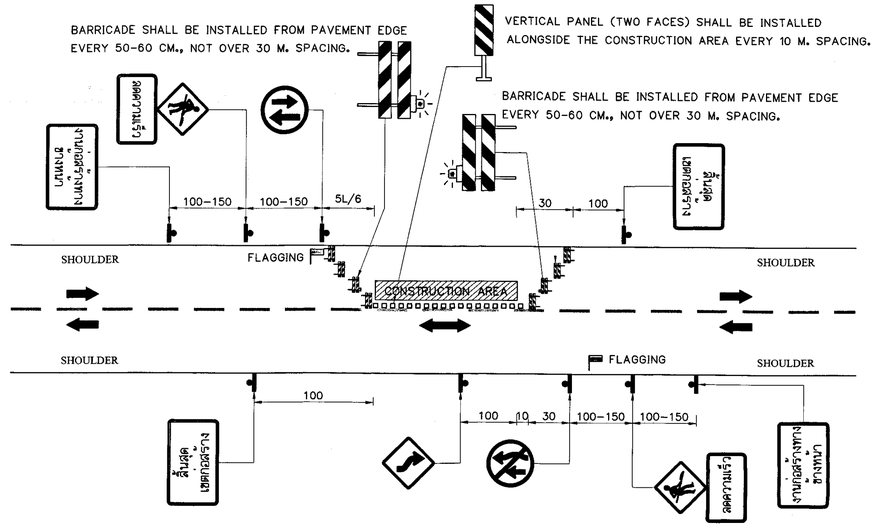

FOR ONE WAY TRAFFIC CONSTRUCTION
NOT TO SCALE

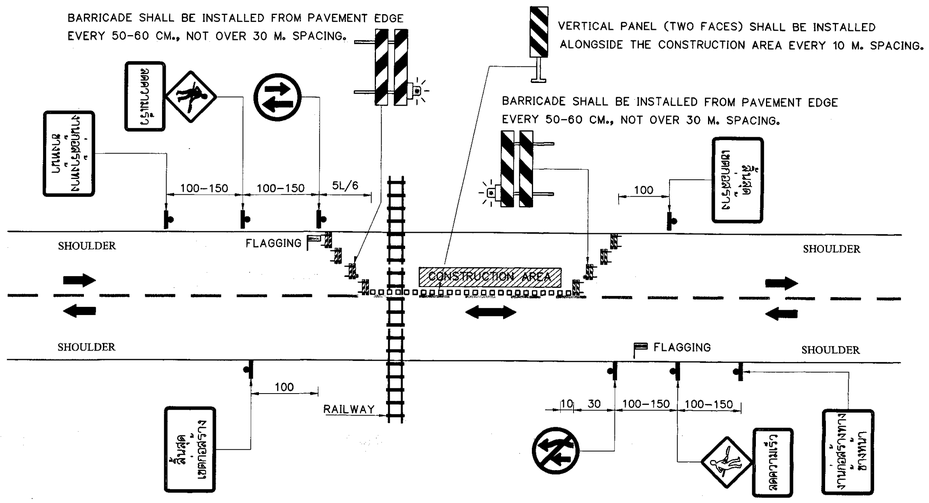

HIGHWAY CONSTRUCTION FOR RAILWAY CROSSING (NO PERMANENT CONTROL DEVICES)
NOT TO SCALE

NOTES:

1. ALL DIMENSIONS ARE IN METERS UNLESS OTHERWISE INDICATED.
2. IF CONSTRUCTION AREA IS OUT OF VERTICAL OR HORIZONTAL CURVE WITH SIGHT DISTANCE UNDER 100 M., THE BARRICADE SHALL BE INSTALLED AT BEGINNING POINT OF CURVE.
3. SPACING OF TRAFFIC SIGNS SPECIFY BY SPEED LIMIT AS BELOW.
   3.1 SPEED LOWER THAN 70 KM/HR USE 100 M SPACING.
   3.2 SPEED UPPER THAN 70 KM/HR USE 150 M SPACING.
4. CONSTRUCTION AREA OVER 300 M. LONG, FLASHERS MUST BE INSTALLED WITH VERTICAL PANEL BY 100 M. SPACING.
5. DETOUR ROAD MUST BE INSTALLED THE BARRICADE THAT NOT OVER 30 M. SPACING AND STARTING INSTALLED FROM PAVEMENT EDGE EVERY 50-60 CM.
6. LENGTH (L) REFERS TO TAPER LENGTH (SEE TABLE 1).

TABLE 1 : TAPER LENGTH

SPEED LIMIT (KM/HR) OR SPEED 85 th. PERCENTILE	TAPER LENGTH = L (M.)					
	WIDTH OF OFFSET (M.)					
	1.5	2	3	3.5	6	7
50	25	30	50	55	95	115
60	35	45	70	80	140	165
70	65	90	130	155	265	305
80	75	100	150	175	300	350
90	85	115	170	195	340	395
100	95	125	190	220	375	440
110	105	140	205	240	415	480
120	115	150	225	265	450	525

SYMBOLS:

- TRAFFIC SIGN
- FLAGGING OR TRAFFIC SIGNAL
- BARRICADE TYPE I
- BARRICADE TYPE II
- CONCRETE BARRIER
- VERTICAL PANEL
- CONSTRUCTION AREA

REF.	REVISION	SIGNATURE	DATE

KINGDOM OF THAILAND

MINISTRY OF TRANSPORT
DEPARTMENT OF HIGHWAYS

STANDARD DRAWING

TRAFFIC CONTROL DEVICES FOR HIGHWAY UNDER CONSTRUCTION INSTALLATION GUIDELINE-I

DESIGNED : D.O.H. & CONSULTANTS	CHECKED : BUREAU OF LOCATION & DESIGN	DATE : OCT 2015
SUBMITTED : (DIRECTOR OF LOCATION & DESIGN BUREAU)		SCALE : AS SHOWN
APPROVED : (FOR DIRECTOR GENERAL)		DWG NO. RS-303
		SHEET NO. 60

D:\std dwg 2015\RS-303(REV000)

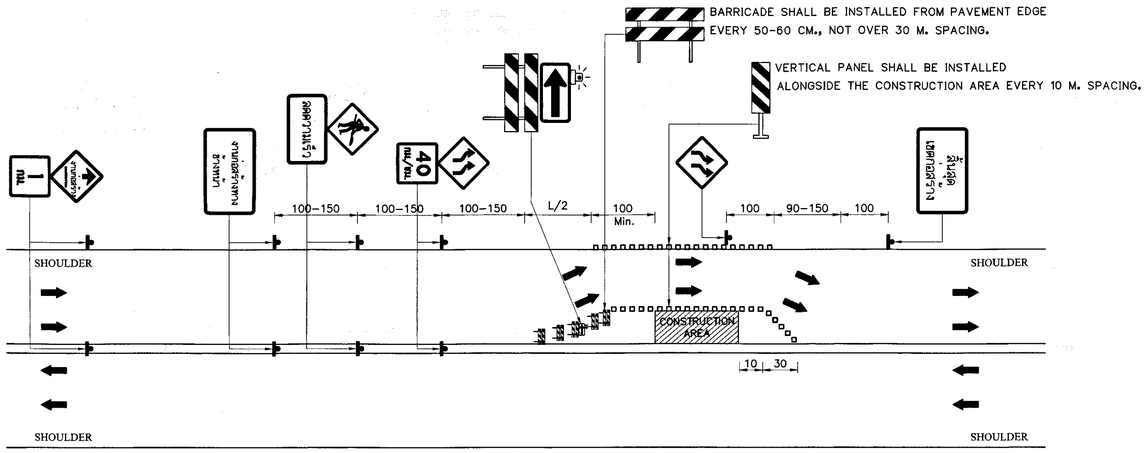

A. FOUR-LANE HIGHWAYS

NOT TO SCALE

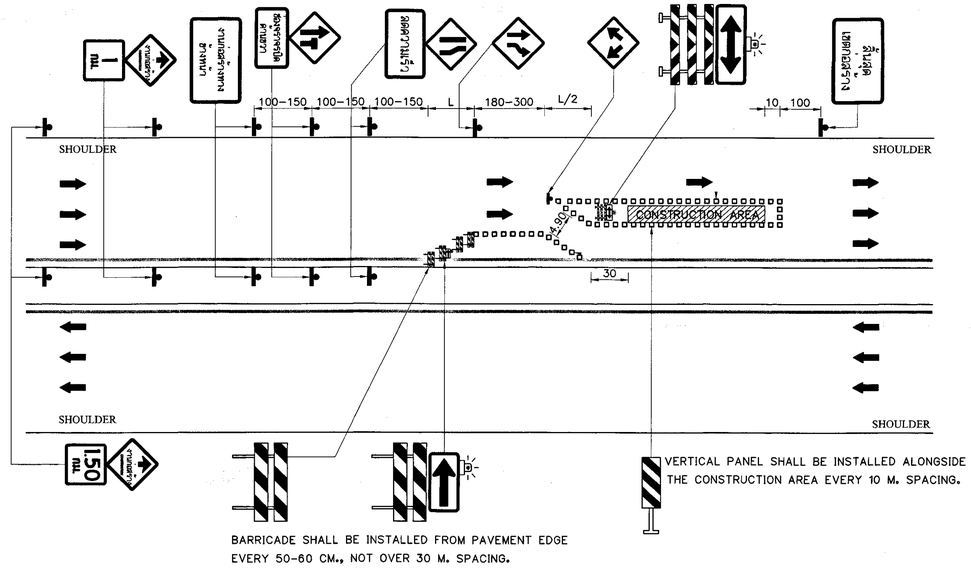

BARRICADE SHALL BE INSTALLED FROM PAVEMENT EDGE
EVERY 50-60 CM., NOT OVER 30 M. SPACING.

VERTICAL PANEL SHALL BE INSTALLED ALONGSIDE
THE CONSTRUCTION AREA EVERY 10 M. SPACING.

C. SIX-LANE HIGHWAYS WITHOUT SHOULDER, MIDDLE LANE CLOSED

NOT TO SCALE

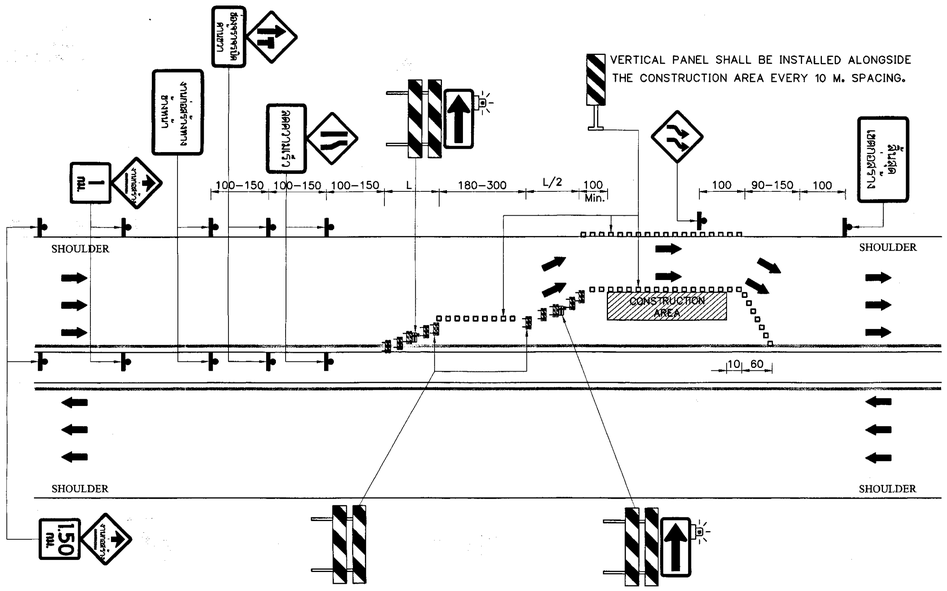

BARRICADE SHALL BE INSTALLED FROM PAVEMENT EDGE
EVERY 50-60 CM., NOT OVER 30 M. SPACING.

B. SIX-LANE HIGHWAYS WITH SHOULDER, MIDDLE LANE CLOSED

NOT TO SCALE

NOTES:

1. ALL DIMENSIONS ARE IN METERS UNLESS OTHERWISE INDICATED.
2. IF CONSTRUCTION AREA IS OUT OF VERTICAL OR HORIZONTAL CURVE WITH SIGHT DISTANCE UNDER 100 M., THE BARRICADE SHALL BE INSTALLED AT BEGINNING POINT OF CURVE.
3. SPACING OF TRAFFIC SIGNS SPECIFY BY SPEED LIMIT AS BELOW.
   - 3.1 SPEED LOWER THAN 70 KM/HR USE 100 M SPACING.
   - 3.2 SPEED UPPER THAN 70 KM/HR USE 150 M SPACING.
4. CONSTRUCTION AREA OVER 300 M. LONG, FLASHERS MUST BE INSTALLED WITH VERTICAL PANEL BY 100 M. SPACING.
5. DETOUR ROAD MUST BE INSTALLED THE BARRICADE THAT NOT OVER 30 M. SPACING AND STARTING INSTALLED FROM PAVEMENT EDGE EVERY 50-60 CM.
6. LENGTH (L) REFERS TO TAPER LENGTH (SEE TABLE 1).

SYMBOLS:

- TRAFFIC SIGN
- FLAGGING OR TRAFFIC SIGNAL
- BARRICADE TYPE I
- BARRICADE TYPE II
- CONCRETE BARRIER
- VERTICAL PANEL
- CONSTRUCTION AREA

TABLE 1 : TAPER LENGTH

SPEED LIMIT (KM/HR) OR SPEED 85 th. PERCENTILE	TAPER LENGTH = L (M.) WIDTH OF OFFSET (M.)					
	1.5	2	3	3.5	6	7
50	25	30	50	55	95	115
60	35	45	70	80	140	165
70	65	90	130	155	265	305
80	75	100	150	175	300	350
90	85	115	170	195	340	395
100	95	125	190	220	375	440
110	105	140	205	240	415	480
120	115	150	225	265	450	525

HIGHWAYS CONSTRUCTION WITH ONE LANE CLOSED

NOT TO SCALE

REF.	REVISION	SIGNATURE	DATE

KINGDOM OF THAILAND

MINISTRY OF TRANSPORT

DEPARTMENT OF HIGHWAYS

STANDARD DRAWING

TRAFFIC CONTROL DEVICES FOR HIGHWAY UNDER CONSTRUCTION
INSTALLATION GUIDELINE-II

DESIGNED : D.O.H. & CONSULTANTS	**CHECKED :** BUREAU OF LOCATION & DESIGN	**DATE :** OCT 2015
SUBMITTED : (DIRECTOR OF LOCATION & DESIGN BUREAU)		**SCALE :** AS SHOWN
APPROVED : (FOR DIRECTOR GENERAL)		**DWG NO.** RS-304
		SHEET NO. 61

D:\std dwg 2015\RS-304(RE\00)

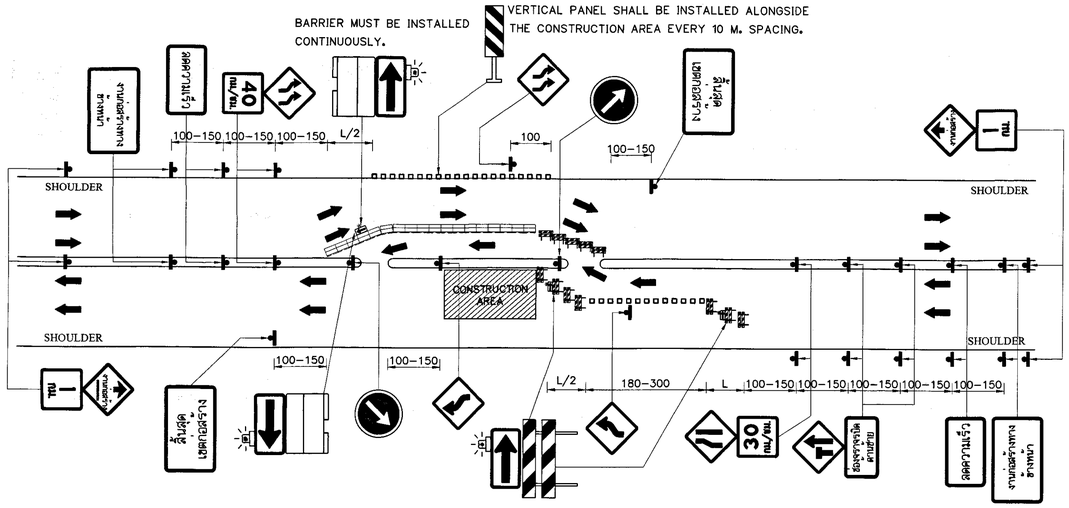

DIVIDED HIGHWAYS CONSTRUCTION, ONE WAY CLOSED
NOT TO SCALE

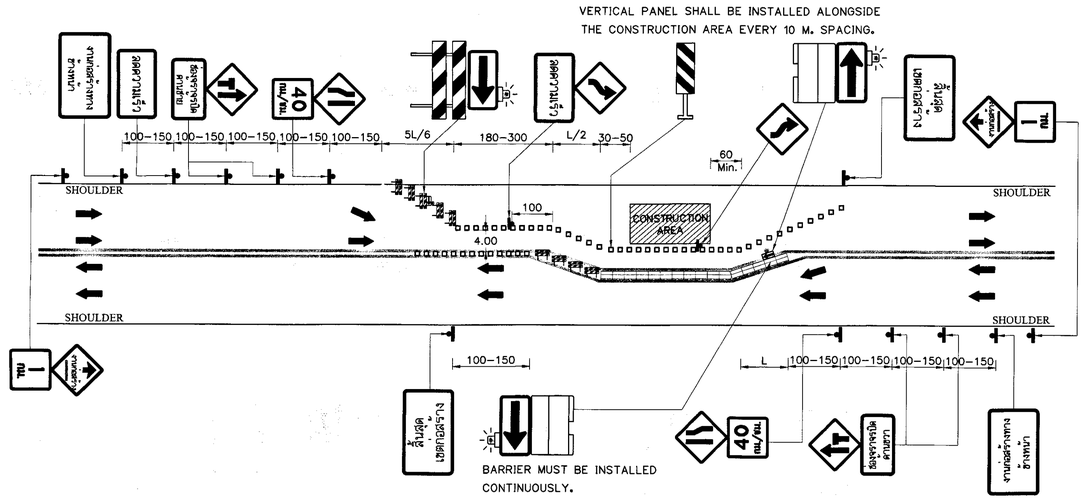

FOUR – LANE HIGHWAYS CONSTRUCTION WITHOUT MEDIAN, ONE WAY CLOSED
NOT TO SCALE

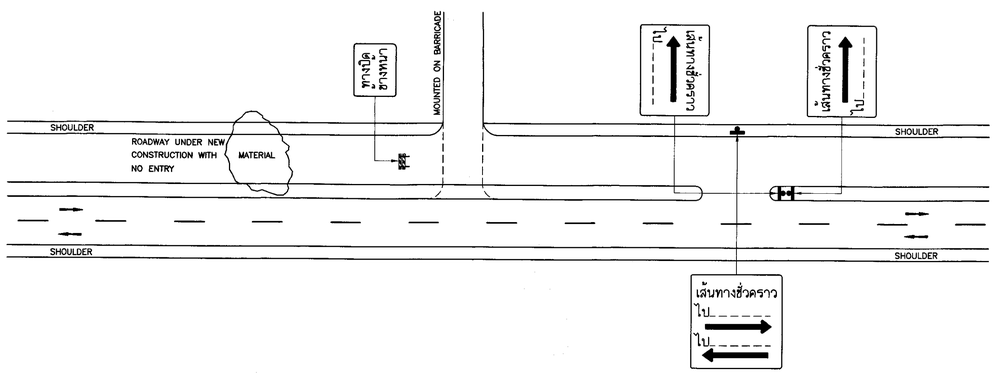

NEW HIGHWAY CONSTRUCTION IN CASE OF CLOSED AND ONE-WAY ENTRANCE
NOT TO SCALE

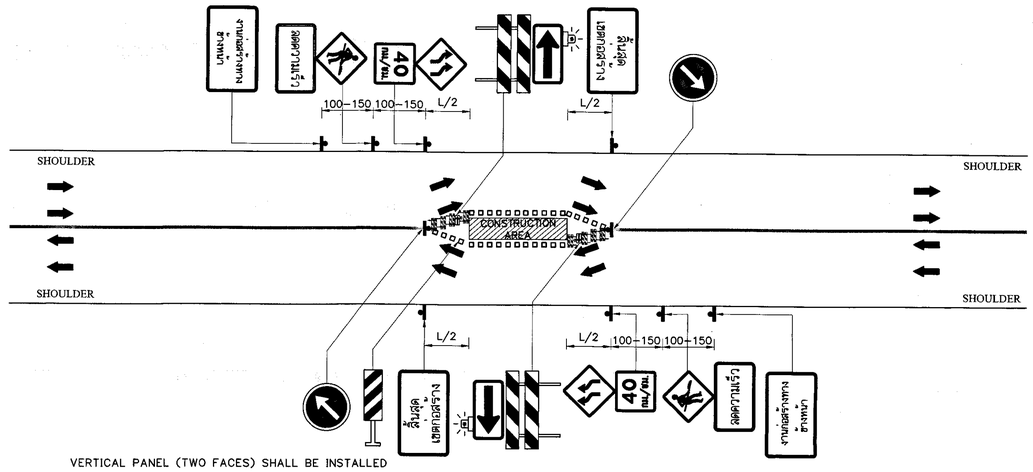

VERTICAL PANEL (TWO FACES) SHALL BE INSTALLED ALONGSIDE THE CONSTRUCTION AREA EVERY 10 M. SPACING.

FOUR – LANE HIGHWAYS CONSTRUCTION WITHOUT MEDIAN, MIDWAY CLOSED
NOT TO SCALE

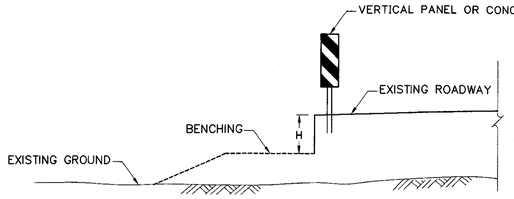

BENCHING ROAD CONSTRUCTION
NOT TO SCALE

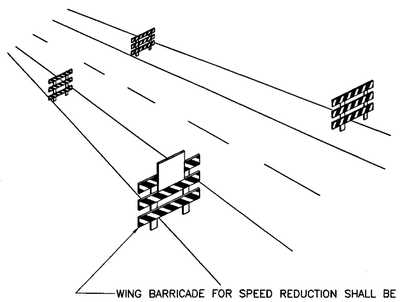

WING BARRICADE FOR SPEED REDUCTION SHALL BE INSTALLED WITH SPACING APPROXIMATE 50 – 100 M. TAPERING TO PAVEMENT EDGE

SPEED CONTROL SIGN
NOT TO SCALE

NOTES:

1. ALL DIMENSIONS ARE IN METERS *UNLESS* OTHERWISE INDICATED.
2. IF CONSTRUCTION AREA IS OUT OF VERTICAL OR HORIZONTAL CURVE WITH SIGHT DISTANCE UNDER 100 M., THE BARRICADE SHALL BE INSTALLED AT BEGINNING POINT OF CURVE.
3. SPACING OF TRAFFIC SIGNS SPECIFY BY SPEED LIMIT AS BELOW.
   3.1 SPEED LOWER THAN 70 KM/HR USE 100 M SPACING.
   3.2 SPEED UPPER THAN 70 KM/HR USE 150 M SPACING.
4. CONSTRUCTION AREA OVER 300 M. LONG, FLASHERS MUST BE INSTALLED WITH VERTICAL PANEL BY 100 M. SPACING.
5. DETOUR ROAD MUST BE INSTALLED THE BARRICADE THAT NOT OVER 30 M. SPACING AND STARTING INSTALLED FROM PAVEMENT EDGE EVERY 50–60 CM.
6. LENGTH (L) REFERS TO TAPER LENGTH (SEE TABLE 1).
7. VERTICAL PANEL OR CONCRETE BARRIER INSTALLATION DEPEND ON HEIGHT (H) OF BENCHING AS BELOW.
   – FOR HEIGHT 5–25 CM. INSTALLS VERTICAL PANEL EVERY 10 M. SPACING.
   – FOR HEIGHT 26–50 CM. INSTALLS VERTICAL PANEL EVERY 4 M. SPACING.
   – FOR HEIGHT MORE THAN 50 CM. INSTALLS CONCRETE BARRIER.

TABLE 1 : TAPER LENGTH

SPEED LIMIT (KM/HR) OR SPEED 85 th. PERCENTILE	TAPER LENGTH = L (M.) WIDTH OF OFFSET (M.)					
	1.5	2	3	3.5	6	7
50	25	30	50	55	95	115
60	35	45	70	80	140	165
70	65	90	130	155	265	305
80	75	100	150	175	300	350
90	85	115	170	195	340	395
100	95	125	190	220	375	440
110	105	140	205	240	415	480
120	115	150	225	265	450	525

SYMBOLS:
- TRAFFIC SIGN
- FLAGGING OR TRAFFIC SIGNAL
- BARRICADE TYPE I
- BARRICADE TYPE II
- CONCRETE BARRIER
- VERTICAL PANEL
- CONSTRUCTION AREA

REF.	REVISION	SIGNATURE	DATE

KINGDOM OF THAILAND
MINISTRY OF TRANSPORT
DEPARTMENT OF HIGHWAYS

STANDARD DRAWING

TRAFFIC CONTROL DEVICES FOR HIGHWAY UNDER CONSTRUCTION INSTALLATION GUIDELINE–III

DESIGNED : D.O.H. & CONSULTANTS	CHECKED : BUREAU OF LOCATION & DESIGN	DATE : OCT 2015
SUBMITTED : (DIRECTOR OF LOCATION & DESIGN BUREAU)		SCALE : AS SHOWN
APPROVED : (FOR DIRECTOR GENERAL)		DWG NO. RS–305
		SHEET NO. 62

D:\std_dwg 2015\RS-305(REV00)

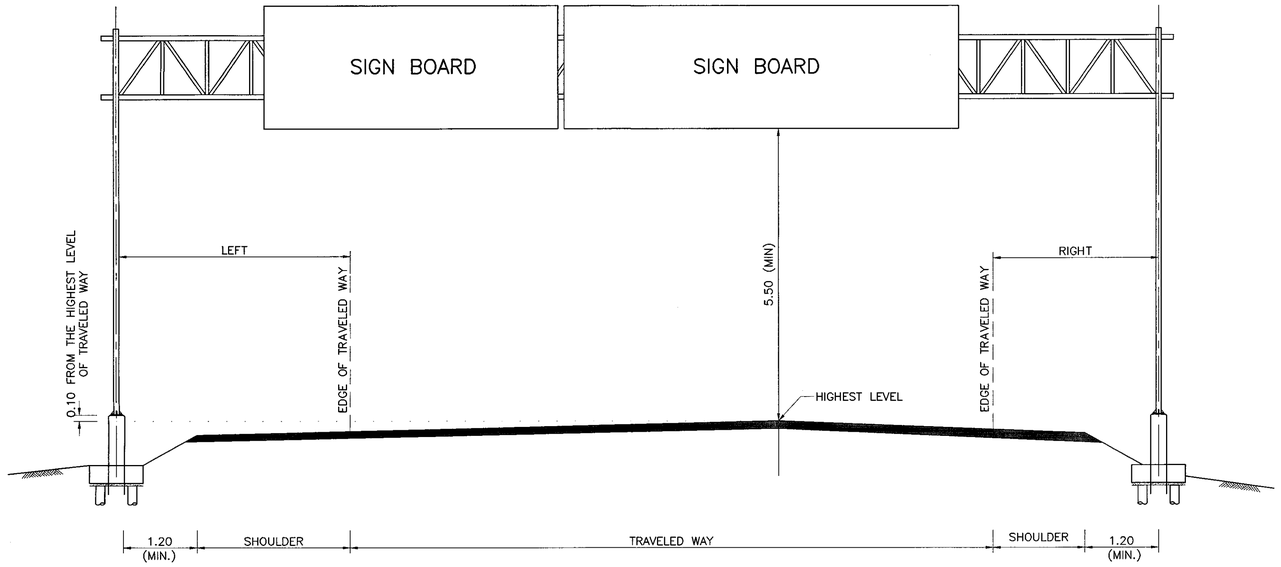

OVERHEAD SIGN
SCALE 1 : 50

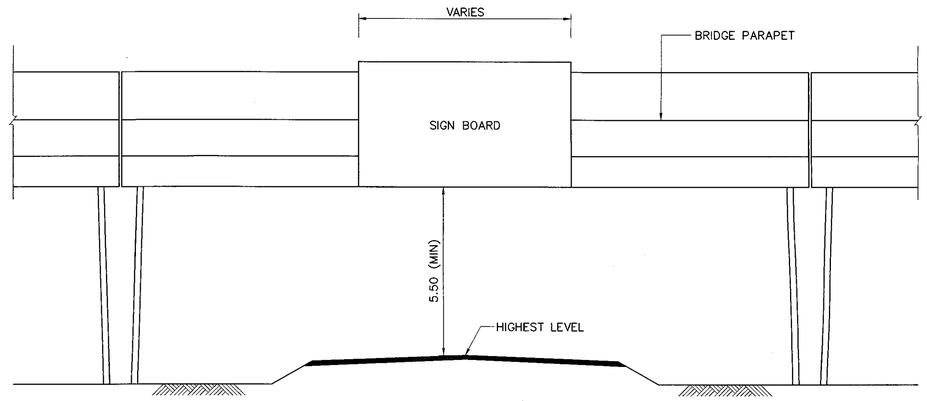

SIGN BOARD ERECTION ON BRIDGE DECK
SCALE 1 : 100

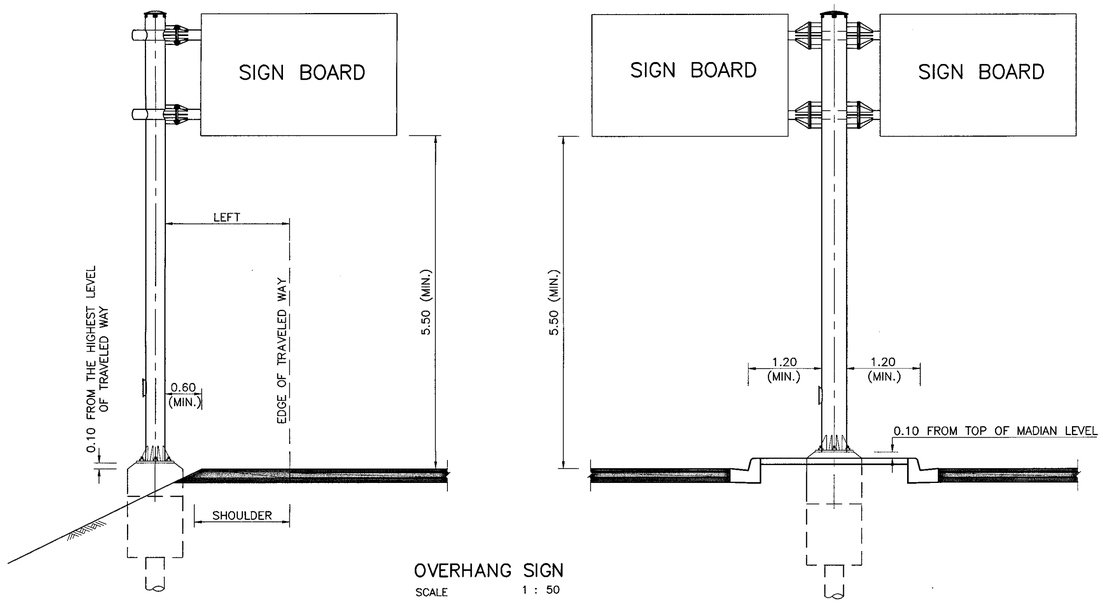

OVERHANG SIGN
SCALE 1 : 50

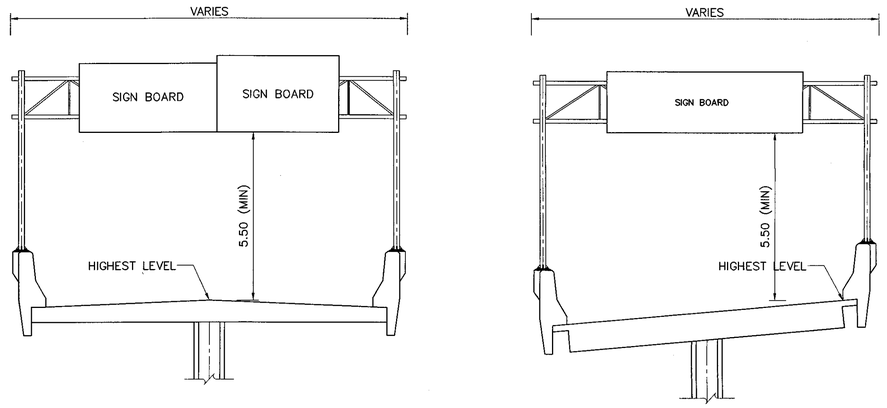

OVERHEAD SIGN ON BARRIER
SCALE 1 : 100

NOTES :

1. DIMENSIONS SHOWN ARE IN METERS UNLESS OTHERWISE INDICATED.

TABLE 1 GUIDELINE FOR OVERHEAD AND OVERHANG TRAFFIC SIGN INSTALLATION

TYPE	MINIMUM DISTANCE FROM EDGE OF TRAVELED WAY TO COLUMN SURFACE			
	NO CURB		CURB	
	LEFT	RIGHT	LEFT	RIGHT
MOTORWAY	5.00	3.75	1.20	1.20
HIGHWAY	4.00	2.75	1.20	1.20

REF.	REVISION	SIGNATURE	DATE

KINGDOM OF THAILAND
MINISTRY OF TRANSPORT
DEPARTMENT OF HIGHWAYS
STANDARD DRAWING

OVERHEAD AND OVERHANG SIGN INSTALLATION

DESIGNED : D.O.H. & CONSULTANTS	**CHECKED :** BUREAU OF LOCATION & DESIGN	**DATE :** OCT 2015
SUBMITTED : (DIRECTOR OF LOCATION & DESIGN BUREAU)		**SCALE :** AS SHOWN
		DWG NO. RS-401
APPROVED : (FOR DIRECTOR GENERAL)		**SHEET NO.** 63

D:\std dwg 2015\RS-401(REV00)

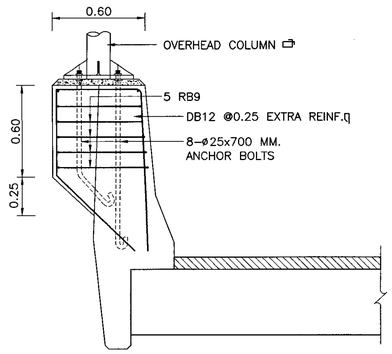

SECTION A -A

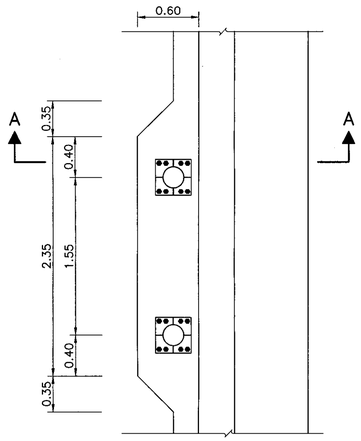

TOP VIEW

OVERHEAD COLUMN ON OUTSIDE BARRIER
NOT TO SCALE

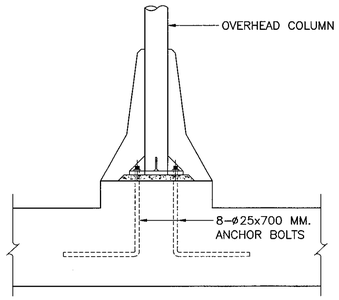

SECTION B -B

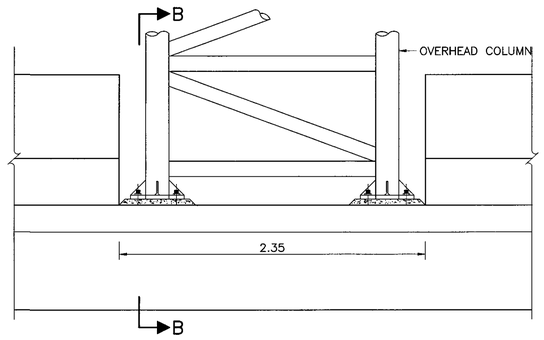

ELEVATION

OVERHEAD COLUMN ON INSIDE BARRIER
NOT TO SCALE

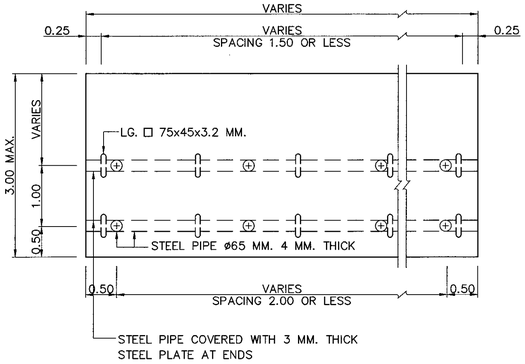

ERECTION FOR SIGN BOARD
SCALE 1:50

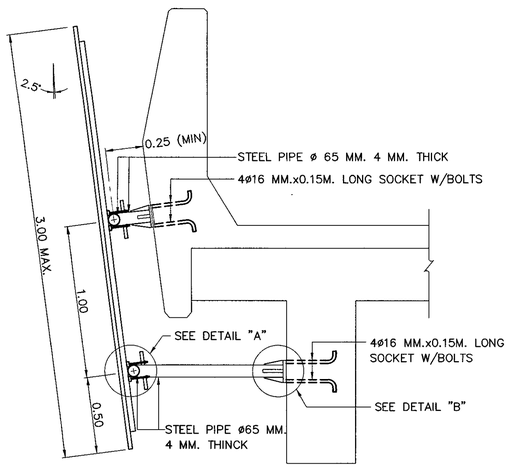

SIGN BOARD ERECTION ON BRIDGE
SCALE 1:20

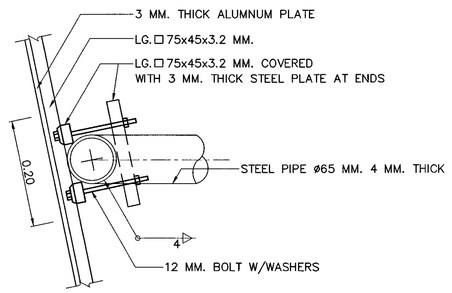

DETAIL "A"
SCALE 1 : 5

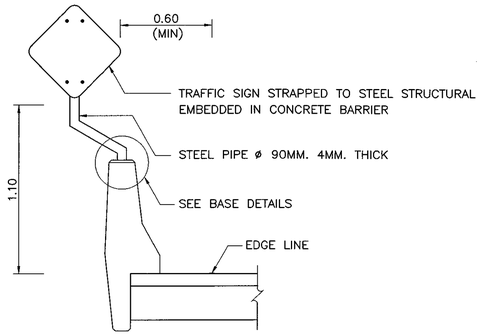

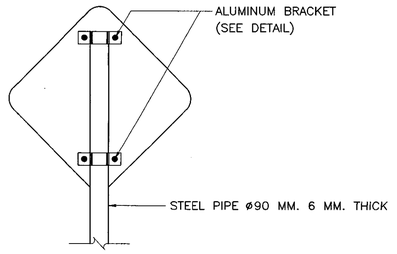

FRONT ELEVATION

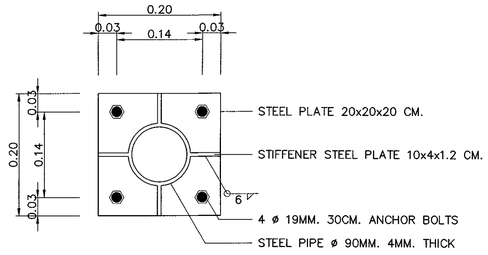

BASE DETAILS

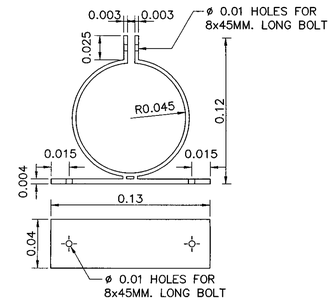

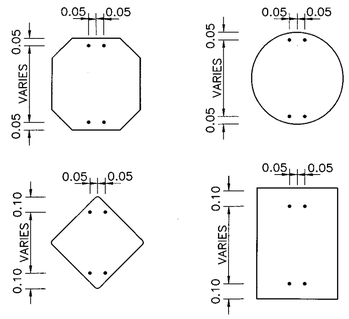

ASSEMBLY DETAILS

ALUMINUM BRACKET ASSEMBLY DETAILS
NOT TO SCALE

TRAFFIC SIGN AND FRAME ON BARRIER
NOT TO SCALE

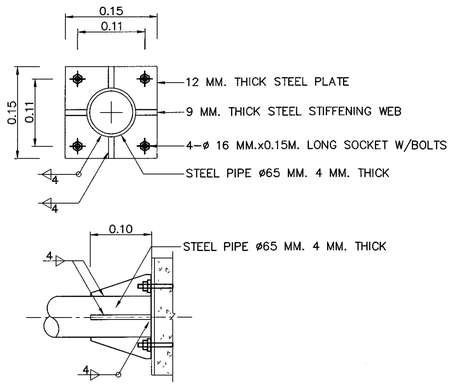

DETAIL "B"
SCALE 1 : 5

NOTES :

1. DIMENSIONS SHOWN ARE IN METERS EXCEPT WELDING SYMBOLS ARE IN MILLIMETERS, OR OTHERWISE INDICATED.
2. STEEL PIPE AND RECTANGULAR SECTION STEEL SHALL CONFORM TO TIS. 107 GRADE HS 41.
3. REINFORCE STEEL SHALL CONFORM TO TIS.20 GRADE SR24 FOR ROUND BARS AND TIS.24 GRADE SD40 FOR DEFORMED BARS.
4. ANCHOR BOLTS SHALL CONFORM TO ASTM-A307
5. LIGHT GAUGE STEEL (LG.) OF SIGN FRAME SHALL BE CONNECTED TOGETHER WITH 3 MM. WELD AND CONFORM TO AWS.
6. ALL STEEL AND BOLT ASSEMBLY SHALL BE GALVANIZED. ZINC COATING SHALL NOT BE LESS THAN 550 GRAMS PER SQUARE METER.
7. SIGN BOARD ON BRIDGE BARRIER IS SUTABLE ONLY IN SKEW NOT MORE THAN 10 DEGREE BY ADUSTED THE LENGTH OF SUPPORT PIPES.

KINGDOM OF THAILAND

MINISTRY OF TRANSPORT
DEPARTMENT OF HIGHWAYS

STANDARD DRAWING

INSTALLATION OF OVERHEAD SIGN & TRAFFIC SIGN ON BRIDGE BARRIER

DESIGNED : D.O.H. & CONSULTANTS	**CHECKED :** BUREAU OF LOCATION & DESIGN		**DATE :** OCT 2015
SUBMITTED : (DIRECTOR OF LOCATION & DESIGN BUREAU)			**SCALE :** AS SHOWN
			DWG NO. RS-402
APPROVED : (FOR DIRECTOR GENERAL)			**SHEET NO.** 64

REF.	REVISION	SIGNATURE	DATE

D:\std dwg 2015\RS-402(REV00)

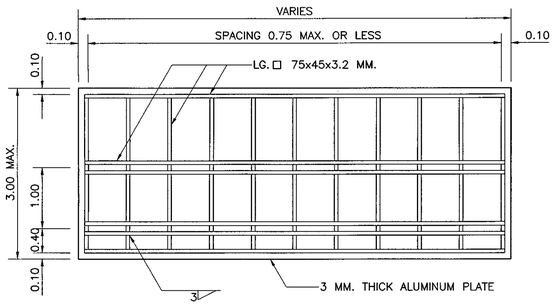

SIGN FRAME (BACK VIEW)
SCALE 1 : 50

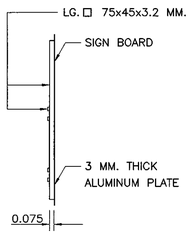

SIDE VIEW
SCALE 1 : 50

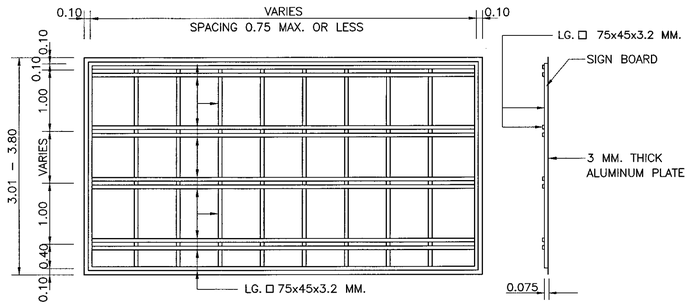

SIGN FRAME (BACK VIEW)
SCALE 1 : 50

SIDE VIEW
SCALE 1 : 50

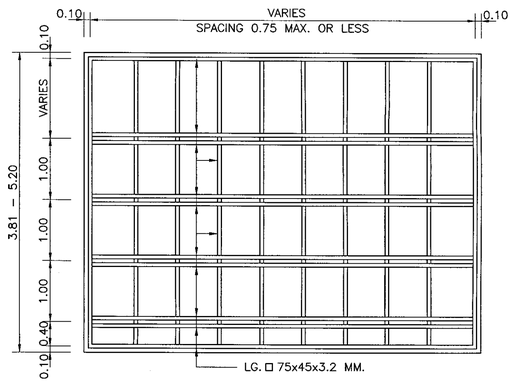

SIGN FRAME (BACK VIEW)
SCALE 1 : 50

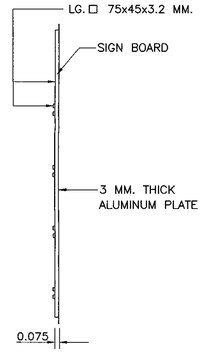

SIDE VIEW
SCALE 1 : 50

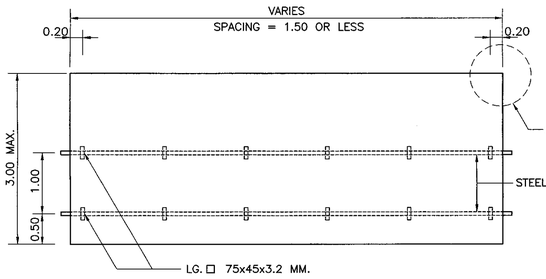

ERECTION FOR SIGN BOARD (FRONT VIEW)
SCALE 1 : 50

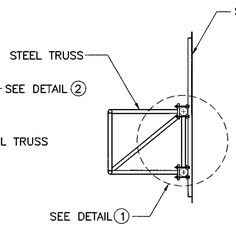

SIDE VIEW
SCALE 1 : 50

SIGN BOARD DETAIL FOR 3.00 M.(MAX.) HEIGHT

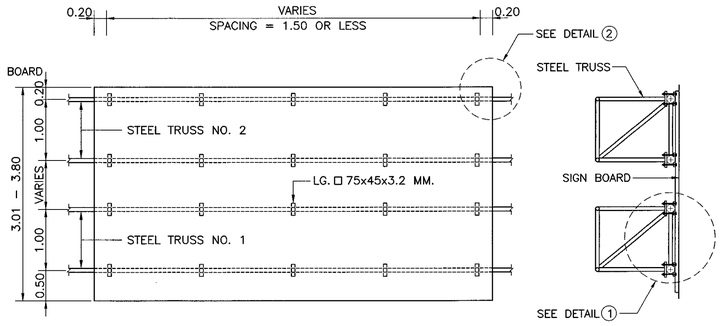

ERECTION FOR SIGN BOARD (FRONT VIEW)
SCALE 1 : 50

SIDE VIEW
SCALE 1 : 50

SIGN BOARD DETAIL FOR 3.01 – 3.80 M. HEIGHT

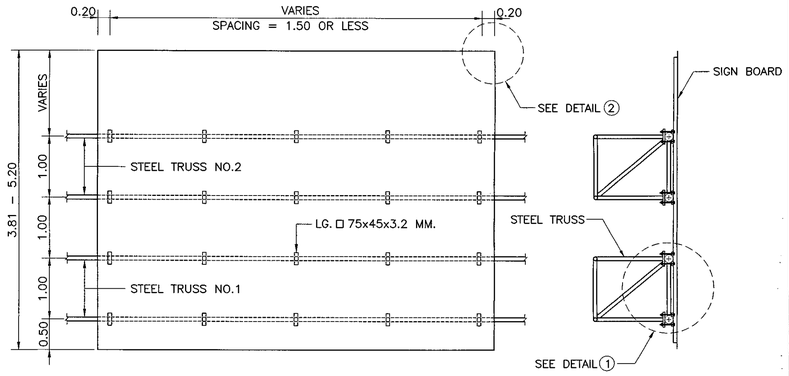

ERECTION FOR SIGN BOARD (FRONT VIEW)
SCALE 1 : 50

SIDE VIEW
SCALE 1 : 50

SIGN BOARD DETAIL FOR 3.81 – 5.20 M. HEIGHT

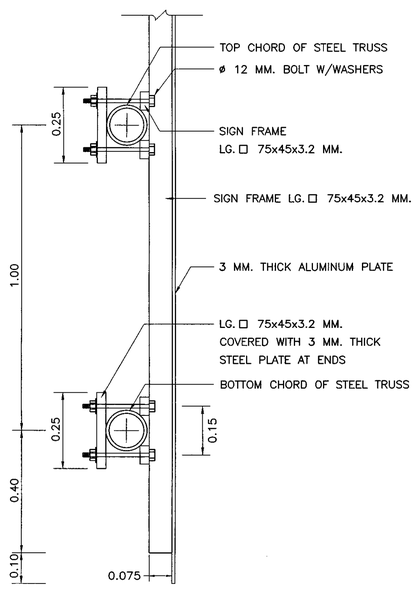

DETAIL ①
SCALE 1 : 10

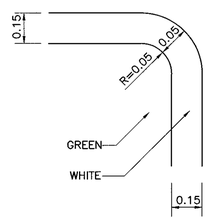

DETAIL ②
SCALE 1 : 5

NOTES :

1. ALL DIMENSIONS SHOWN ARE IN METERS EXCEPT WELDING SYMBOLS ARE IN MILLIMETERS, OR OTHERWISE INDICATED.
2. RECTANGULAR SECTION STEEL SHALL CONFORM TO TIS 107 GRADE HS 41.
3. STEEL SIGN FRAME SHALL BE CONNECTED TOGETHER WITH 3 MM. WELD AND CONFORM TO AWS.
4. ALL STEEL AND BOLT ASSEMBLY SHALL BE GALVANIZED ZINC COATING SHALL NOT BE LESS THAN 550 GRAMS PER SQUARE METER.
5. OVERHEAD SIGN BOARD SHALL BE COVERED BY ALUMINUM PLATE WITH REFLECTIVE SHEETING AS CONFORMED TO TIS 606 AND SHALL BE IN ACCORDANCE WITH THE DOH'S TRAFFIC CONTROL DEVICE MANUAL.

REF.	REVISION	SIGNATURE	DATE

KINGDOM OF THAILAND

MINISTRY OF TRANSPORT
DEPARTMENT OF HIGHWAYS

STANDARD DRAWING

OVERHEAD TRAFFIC SIGN
SIGN BOARD DETAILS

DESIGNED : D.O.H. & CONSULTANTS	**CHECKED :** BUREAU OF LOCATION & DESIGN	**DATE :** OCT 2015
SUBMITTED : (DIRECTOR OF LOCATION & DESIGN BUREAU)		**SCALE :** AS SHOWN
APPROVED : (FOR DIRECTOR GENERAL)		**DWG NO.** RS–403
		SHEET NO. 65

D:\std dwg 2015\RS-403(REV00)

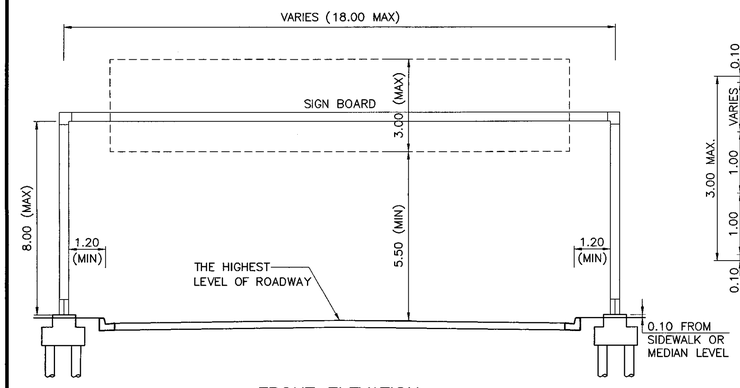

FRONT ELEVATION
SCALE 1 : 100

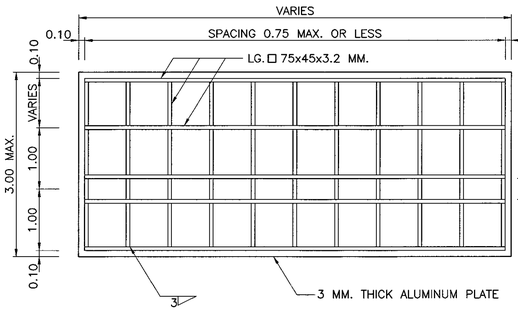

FRONT VIEW

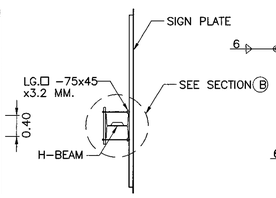

SIDE VIEW

SIGN FRAME (3.00 MAX.)
SCALE 1 : 50

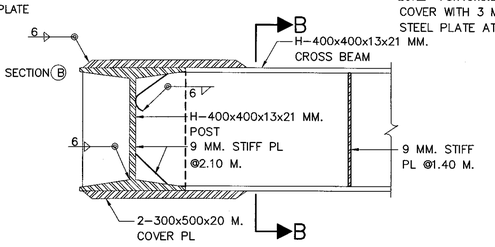

P L A N
SCALE 1 : 10

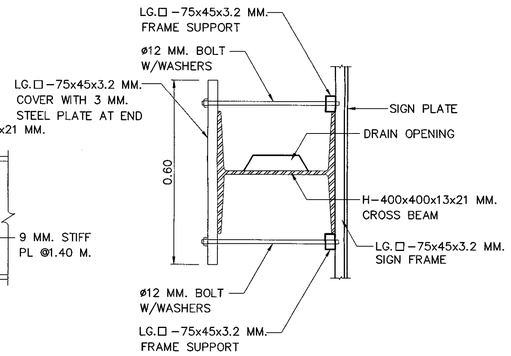

SECTION B – B
SCALE 1 : 10

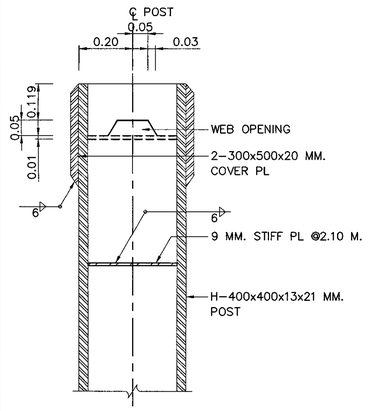

SECTION A – A
SCALE 1 : 10

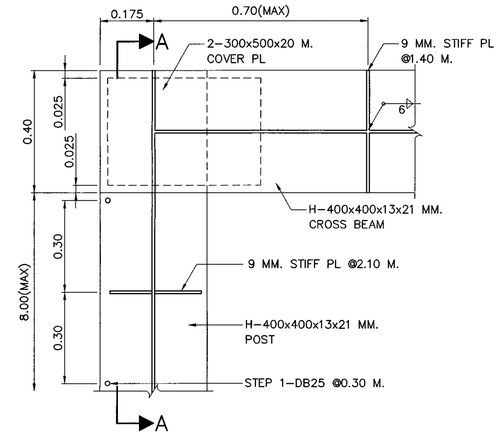

SECTIONAL ELEVATION FOR CROSS BEAM
SCALE 1 : 10

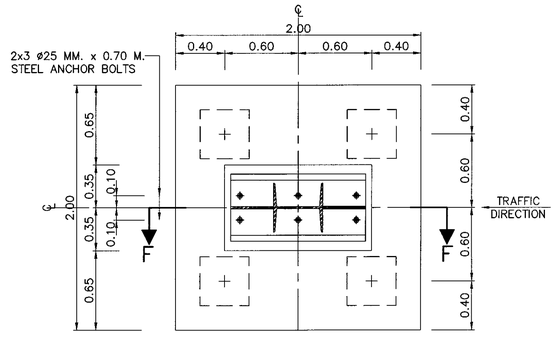

PILE FOOTING PLAN
SCALE 1 : 25

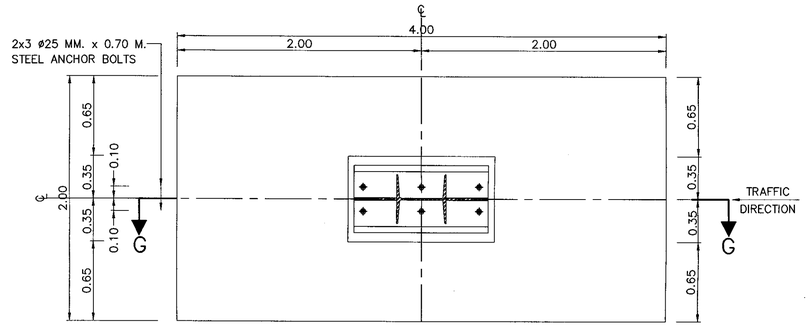

SPREAD FOOTING PLAN
SCALE 1 : 25

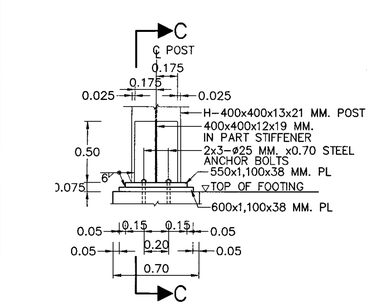

POST BASE DETAIL
SCALE 1 : 25

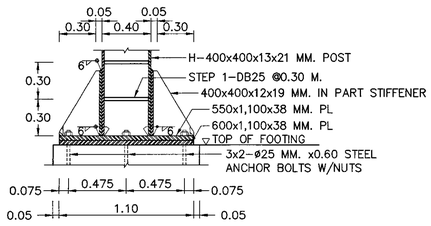

SECTION C – C
SCALE 1 : 25

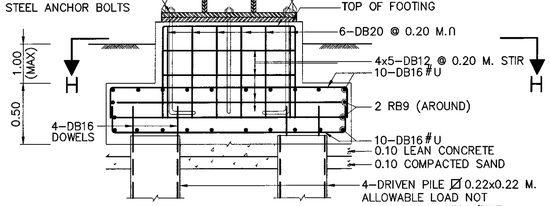

SECTION F – F
SCALE 1 : 25

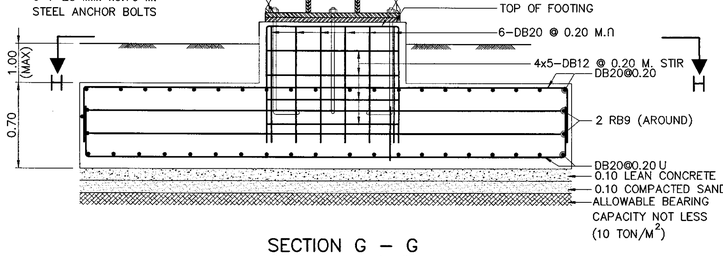

SECTION G – G
SCALE 1 : 25

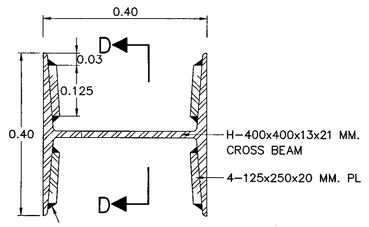

TYPICAL CONNECTION DETAILS AT CROSS BEAM
SCALE 1 : 7.5

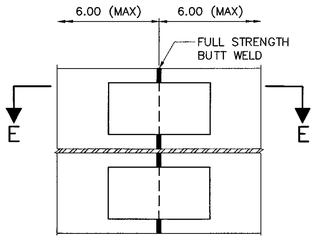

SECTION D – D
SCALE 1 : 7.5

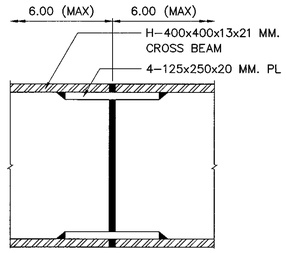

SECTION E – E
SCALE 1 : 7.5

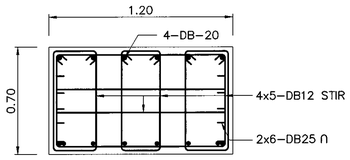

SECTION H – H
SCALE 1 : 20

NOTES :

1. ALL DIMENSIONS SHOWN ARE IN METERS, UNLESS OTHERWISE INDICATED.
2. STRUCTURAL STEEL SHALL CONFROM TO TIS 1227. GRADE SM400.
3. ALL WELDING WORK SHALL BE CONFORM TO AWS.
4. STEEL AND EXPOSED PARTS OF ANCHOR BOLT, NUT AND WASHER SHALL BE GALVANIZED ZINC COATING SHALL NOT BE LESS THAN 550 GRAMS PER SQUARE METER.
5. HIGH-STRENGTH BOLTS SHALL BE COMFORM TO TIS291 OR ASTM-A325 AND ANCHOR BOLTS SHALL BE CONFORM TO ASTM-A307
6. CONCRETE SHALL HAVE A MINIMUM ULTIMATE COMPRESSSIVE STRENGTH OF 30 MPA. (306 KSC) FOR 15x15x15 CM. CUBE AT 28 DAYS. CEMENT SHALL CONFORM TO TIS 15 TYPE I PORTLAND CEMENT OR APPROVAL TYPE.
7. REINFORCING STEEL SHALL CONFORM TO TIS 20 GRADE SR24 FOR ROUND BARS AND TIS24 GRADE SD40 FOR DEFORMED BARS.
8. SPREAD FOUNDATION MAY BE USED WHEN ONLY ALLOWABLE BEARING CAPACITY OF EXISTING SOIL IS OVER 100 KN/M^2 (10 TON/M^2)
9. R.C. PILE OR P.C. PILE SHALL BE SQUARE SECTION AND CONFORMED TO TIS.395 OR TIS.396 AND DOWEL BARS SHALL BE 4–DB25 (FULL LENGTH OF PILE)
10. SAFETY FACTOR OF 2.00 MUST BE APPLIED TO CALCULATE THE ULTIMATE PILE RESISTANCE, THE FINAL PILE TIP ELEVATION SHALL BE APPROVED BY THE ENGINEER.

NOTES :

KINGDOM OF THAILAND

MINISTRY OF TRANSPORT
DEPARTMENT OF HIGHWAYS

STANDARD DRAWING

OVERHEAD TRAFFIC SIGN
STEEL FRAME FOR MOUNTING WIDTH ⩽ 18.00 M.

REF.	REVISION	SIGNATURE	DATE

DESIGNED : D.O.H. & CONSULTANTS | CHECKED : BUREAU OF LOCATION & DESIGN | DATE : OCT 2015

SUBMITTED : (DIRECTOR OF LOCATION & DESIGN BUREAU) | SCALE : AS SHOWN

APPROVED : (FOR DIRECTOR GENERAL) | DWG NO. RS-404 | SHEET NO. 66

D:\std dwg 2015\RS-404(REV00)

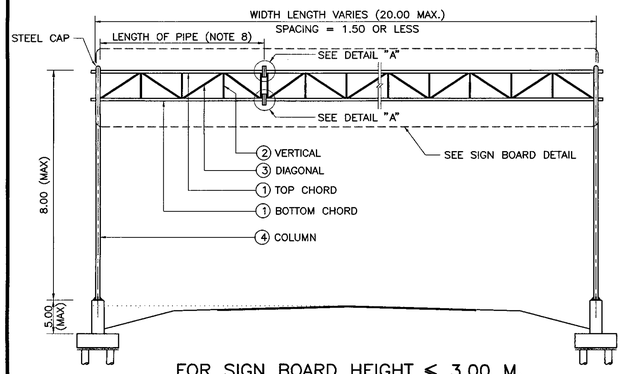

FOR SIGN BOARD HEIGHT ⩽ 3.00 M.

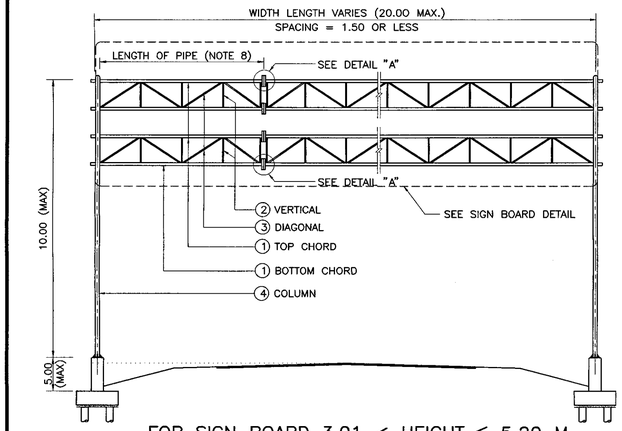

FOR SIGN BOARD 3.01 < HEIGHT ⩽ 5.20 M.

FRONT ELEVATION
SCALE 1:100

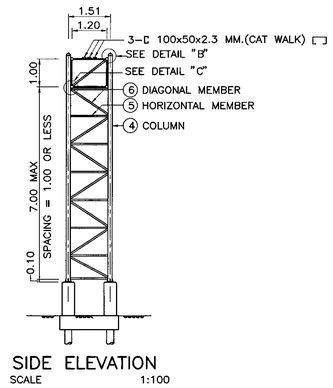

SIDE ELEVATION
SCALE 1:100

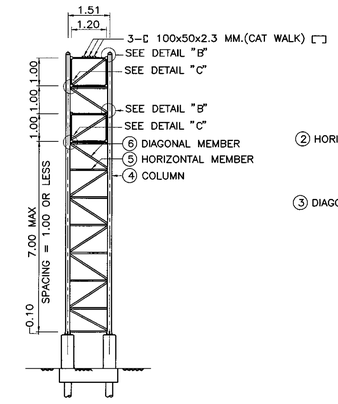

SIDE ELEVATION
SCALE 1:100

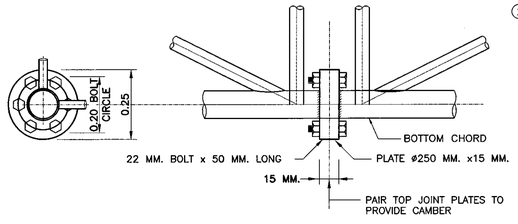

DETAIL "A"
SCALE 1:4

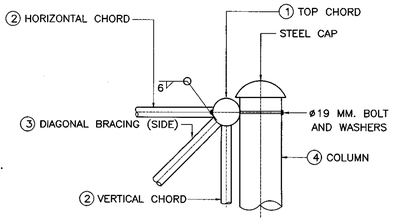

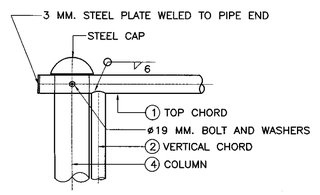

DETAIL "B"
SCALE 1:10

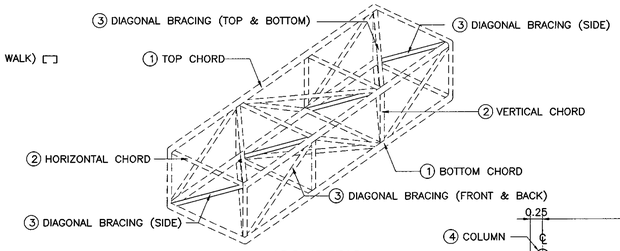

ISOMETRIC
SCALE 1:50

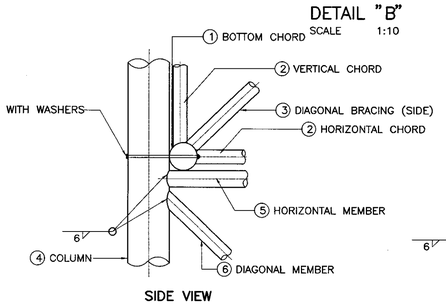

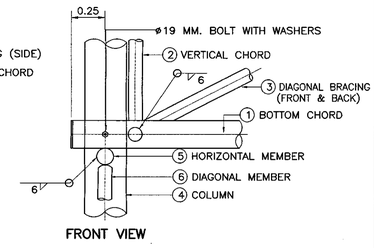

DETAIL "C"
SCALE 1:10

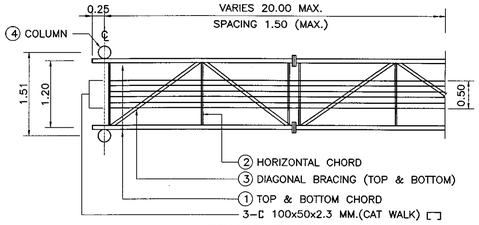

TRUSS PLAN
SCALE 1:50

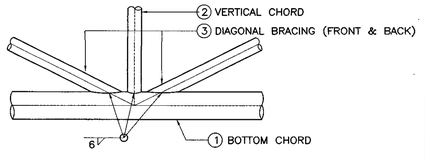

JOINT DETAILS
SCALE 1:10

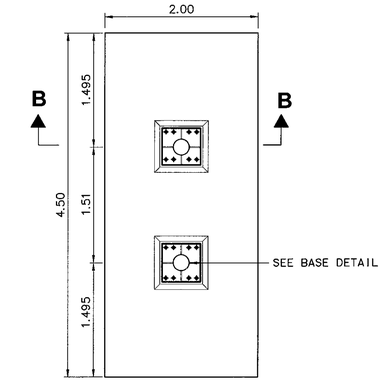

SPREAD FOOTING PLAN
SCALE 1:40

TABLE OF SCHEDULE OF STEEL PIPE MEMBER

	NO.	MEMBER	CIRCULAR HOLLOW SECTION FOR SIGN BOARD HEIGHT 3.00 M. MAX. (OUTSIDE DIAMETER x THICKNESS)	CIRCULAR HOLLOW SECTION FOR SIGN BOARD HEIGHT 3.01 – 5.20 M. MAX (OUTSIDE DIAMETER x THICKNESS)
TRUSS	1	TOP & BOTTOM CHORDS	DIA. 101.6 X 4.0 MM	DIA. 101.6 X 4.0 MM
	2	VERTICAL & HORIZONTAL CHORD	DIA. 76.3 x 3.2 MM	DIA. 76.3 x 3.2 MM
	3	DIAGONAL BRACING	DIA. 76.3 x 3.2 MM	DIA. 76.3 x 3.2 MM
COLUMN	4	COLUMN	DIA. 190.7 x 5.0 MM	DIA. 190.7 x 7.0 MM
	5	HORIZONTAL MEMBER	DIA. 89.1 x 4.0 MM	DIA. 114.3 x 4.5 MM
	6	DIAGONAL MEMBER	DIA. 76.3 x 3.2 MM	DIA. 89.1 x 4.0 MM

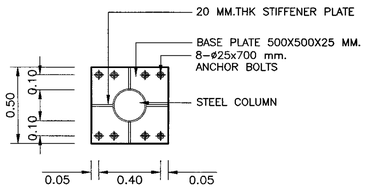

BASE DETAIL
SCALE 1:20

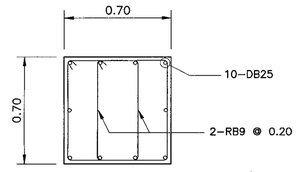

SECTION C – C
SCALE 1:20

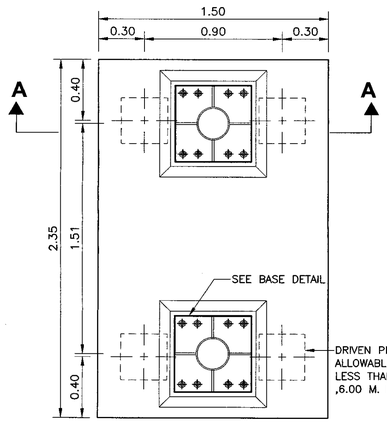

PILE FOOTING PLAN
SCALE 1:20

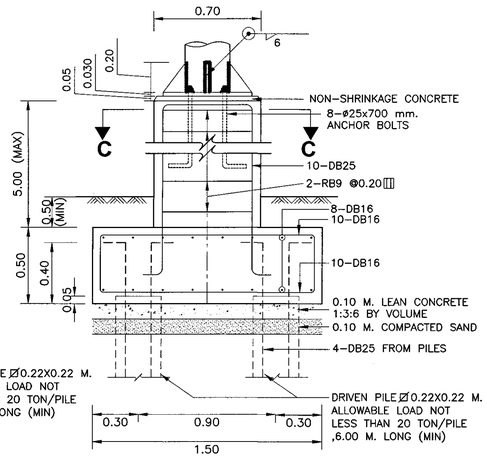

SECTION A – A
SCALE 1:20

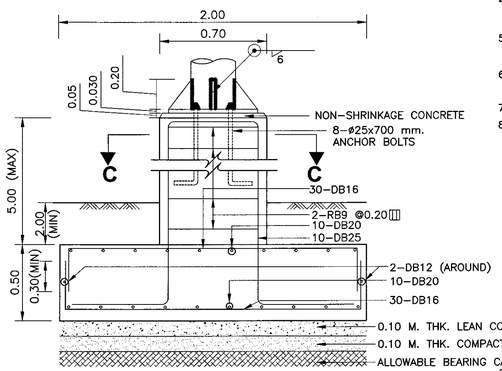

SECTION B – B
SCALE 1:20

NOTES :

1. ALL DIMENSIONS SHOWN ARE IN METERS, UNLESS OTHERWISE INDICATED.
2. STEEL PIPE SHALL CONFORM TO TIS 107 GRADE HS41.
3. ALL WELDING WORK SHALL BE CONFORM TO AWS.
4. STEEL AND EXPOSED PARTS OF ANCHOR BOLT, NUT AND WASHER SHALL BE GALVANIZED ZINC COATING SHALL NOT BE LESS THAN 550 GRAMS PER SQUARE METER.
5. HIGH–STRENGTH BOLTS SHALL BE COMFORM TO TIS291 OR ASTM–A325 AND ANCHOR BOLTS SHALL BE CONFORM TO ASTM–A307
6. CONCRETE SHALL HAVE A MINIMUM ULTIMATE COMPRESSSIVE STRENGTH OF 30 MPA. (306 KSC) FOR 15x15x15 CM. CUBE AT 28 DAYS. CEMENT SHALL CONFORM TO TIS 15 TYPE I PORTLAND CEMENT OR APPROVAL TYPE.
7. REINFORCING STEEL SHALL CONFORM TO TIS 20 GRADE SR24 FOR ROUND BARS AND TIS24 GRADE SD40 FOR DEFORMED BARS.
8. FOR COMFORTABLE TRANSPORTATION, STEEL TRUSS BEAM MAY BE BUILT IN PORTIONS AS SHOWN IN TABLE 1 AND INSTALLATION AT SITE BY BOLT & NUT ARE SHOWN IN DETAIL "A"

TABLE 1

SPAN LENGTH (M.)	LENGTH OF STEEL PIPE (M.)
17.00	6.00+5.50+6.00 = 17.50
18.00	6.00+3.25+3.25+6.00 = 18.50
19.00	6.00+3.75+3.75+6.00 = 19.50
20.00	6.00+4.25+4.25+6.00 = 20.50

REF.	REVISION	SIGNATURE	DATE

KINGDOM OF THAILAND

MINISTRY OF TRANSPORT
DEPARTMENT OF HIGHWAYS

STANDARD DRAWING

OVERHEAD TRAFFIC SIGN
STEEL FRAME FOR MOUNTING WIDTH ⩽ 20 M.

DESIGNED : D.O.H. & CONSULTANTS	CHECKED : BUREAU OF LOCATION & DESIGN	DATE : OCT 2015
SUBMITTED : (DIRECTOR OF LOCATION & DESIGN BUREAU)		SCALE : AS SHOWN
APPROVED : (FOR DIRECTOR GENERAL)		DWG NO. RS–405
		SHEET NO. 67

D:\std dwg 2015\RS-405(REV00)

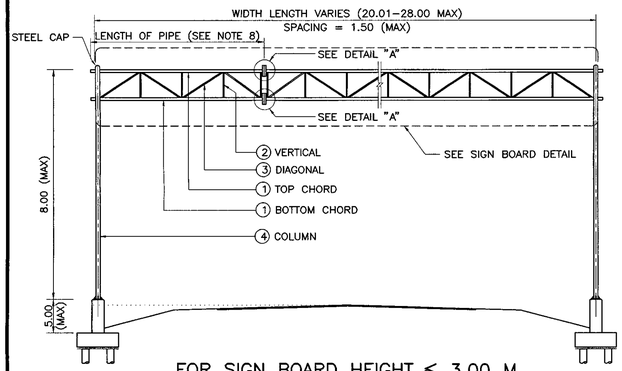

FOR SIGN BOARD HEIGHT ⩽ 3.00 M.

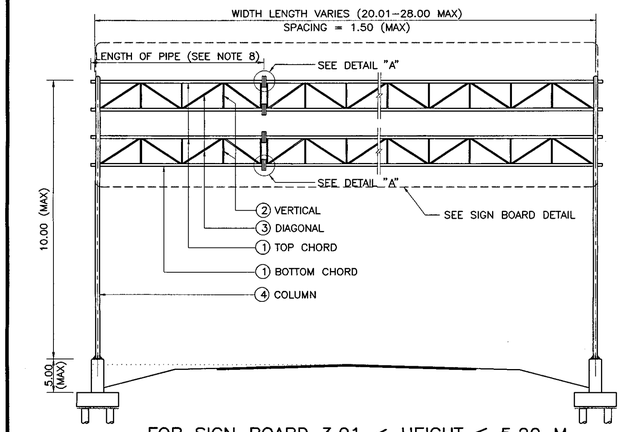

FOR SIGN BOARD 3.01 < HEIGHT ⩽ 5.20 M.

FRONT ELEVATION
SCALE 1:100

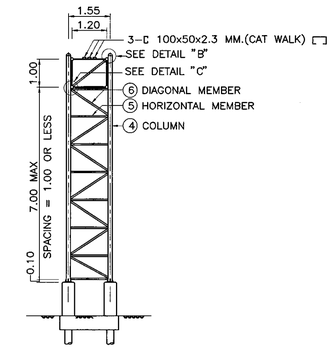

SIDE ELEVATION
SCALE 1:100

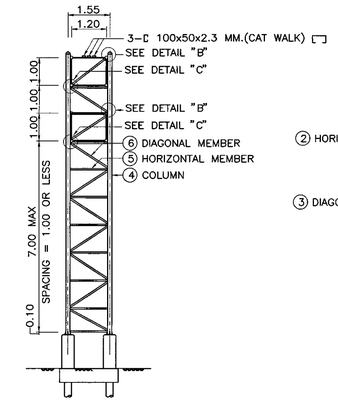

SIDE ELEVATION
SCALE 1:100

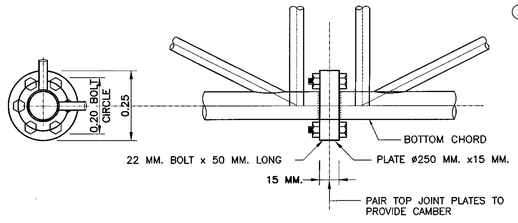

SIDE VIEW FRONT VIEW

DETAIL "A"
SCALE 1:4

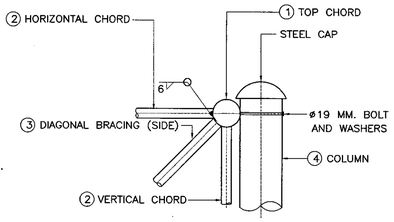

SIDE VIEW

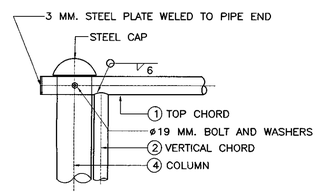

FRONT VIEW

DETAIL "B"
SCALE 1:10

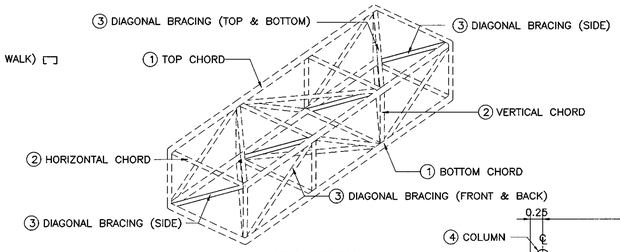

ISOMETRIC
SCALE 1:50

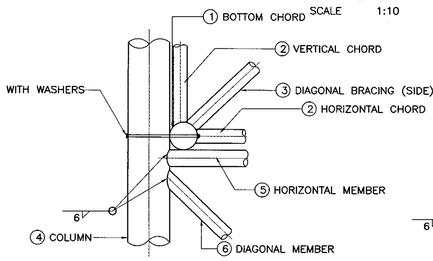

SIDE VIEW

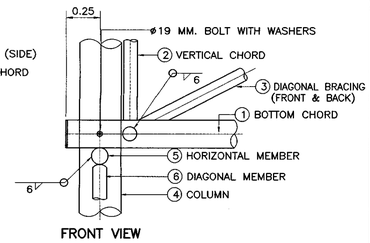

FRONT VIEW

DETAIL "C"
SCALE 1:10

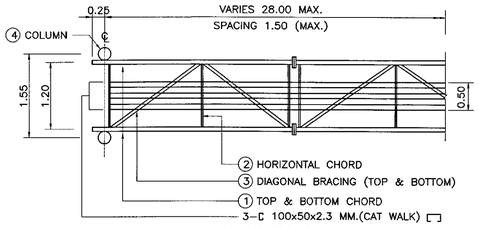

TRUSS PLAN
SCALE 1:50

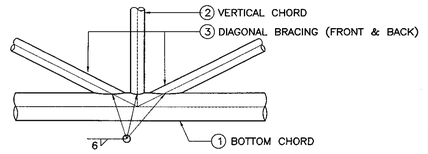

JOINT DETAILS
SCALE 1:10

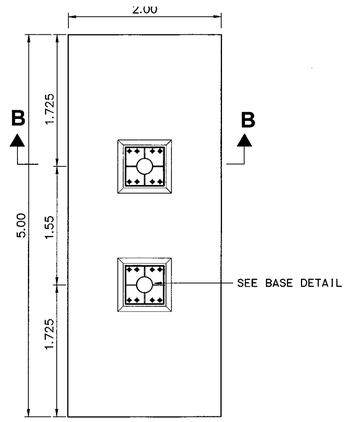

SPREAD FOOTING PLAN
SCALE 1:40

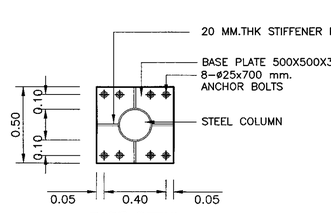

BASE DETAIL
SCALE 1:20

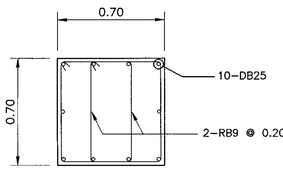

SECTION C – C
SCALE 1:20

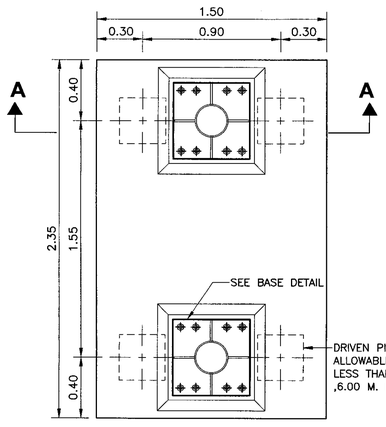

PILE FOOTING PLAN
SCALE 1:20

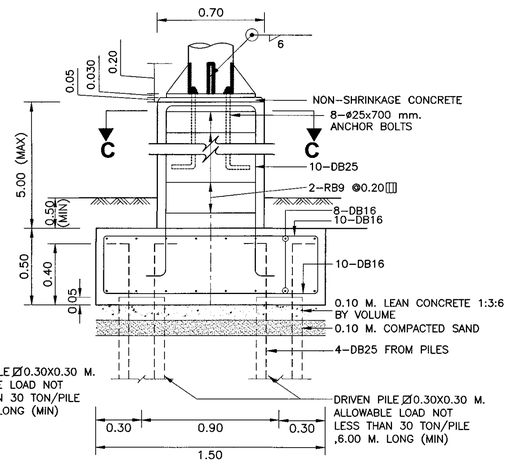

SECTION A – A
SCALE 1:20

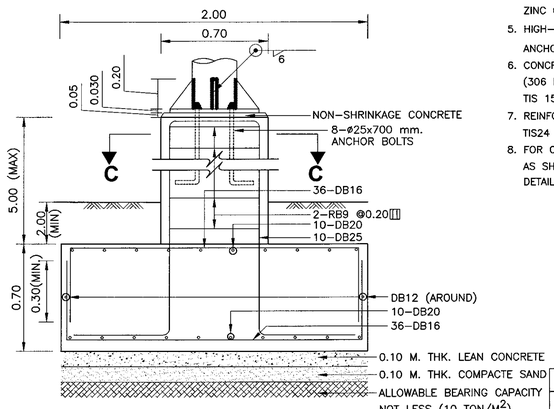

SECTION B – B
SCALE 1:20

TABLE OF SCHEDULE OF STEEL PIPE MEMBER

	NO.	MEMBER	CIRCULAR HOLLOW SECTION FOR SIGN BOARD HEIGHT 3.00 M. MAX. (OUTSIDE DIAMETER x THICKNESS)	CIRCULAR HOLLOW SECTION FOR SIGN BOARD HEIGHT 3.01 – 5.20 M. MAX (OUTSIDE DIAMETER x THICKNESS)
TRUSS	①	TOP & BOTTOM CHORDS	DIA. 114.3 x 5.6 MM	DIA. 114.3 x 5.6 MM
	②	VERTICAL & HORIZONTAL CHORD	DIA. 76.3 x 3.2 MM	DIA. 76.3 x 3.2 MM
	③	DIAGONAL BRACING	DIA. 76.3 x 3.2 MM	DIA. 76.3 x 3.2 MM
COLUMN	④	COLUMN	DIA. 216.3 x 6.0 MM	DIA. 216.3 x 8.0 MM
	⑤	HORIZONTAL MEMBER	DIA. 89.1 x 4.0 MM	DIA. 114.3 x 4.5 MM
	⑥	DIAGONAL MEMBER	DIA. 76.3 x 3.2 MM	DIA. 89.1 x 4.0 MM

NOTES :

1. ALL DIMENSIONS SHOWN ARE IN METERS, UNLESS OTHERWISE INDICATED.
2. STEEL PIPE SHALL CONFORM TO TIS 107 GRADE HS41.
3. ALL WELDING WORK SHALL BE CONFORM TO AWS.
4. STEEL AND EXPOSED PARTS OF ANCHOR BOLT, NUT AND WASHER SHALL BE GALVANIZED ZINC COATING SHALL NOT BE LESS THAN 550 GRAMS PER SQUARE METER.
5. HIGH–STRENGTH BOLTS SHALL BE COMFORM TO TIS291 OR ASTM–A325 AND ANCHOR BOLTS SHALL BE CONFORM TO ASTM–A307
6. CONCRETE SHALL HAVE A MINIMUM ULTIMATE COMPRESSSIVE STRENGTH OF 30 MPA. (306 KSC) FOR 15x15x15 CM. CUBE AT 28 DAYS. CEMENT SHALL CONFORM TO TIS 15 TYPE I PORTLAND CEMENT OR APPROVAL TYPE.
7. REINFORCING STEEL SHALL CONFORM TO TIS 20 GRADE SR24 FOR ROUND BARS AND TIS24 GRADE SD40 FOR DEFORMED BARS.
8. FOR COMFORTABLE TRANSPORTATION, STEEL TRUSS BEAM MAY BE BUILT IN PORTIONS AS SHOWN IN TABLE 1 AND INSTALLATION AT SITE BY BOLT & NUT ARE SHOWN IN DETAIL "A"

TABLE 1

SPAN LENGTH (M.)	LENGTH OF STEEL PIPE (M.)
21.00	6.00+4.75+4.75+6.00 = 21.50
22.00	6.00+5.25+5.25+6.00 = 22.50
23.00	6.00+5.75+5.75+6.00 = 23.50
24.00	6.00+4.25+4.00+4.25+6.00 = 24.50
25.00	6.00+4.50+4.50+4.50+6.00 = 25.50
26.00	6.00+5.00+4.50+5.00+6.00 = 26.50
27.00	6.00+5.50+4.50+5.50+6.00 = 27.50
28.00	6.00+6.00+4.50+6.00+6.00 = 28.50

KINGDOM OF THAILAND

MINISTRY OF TRANSPORT

DEPARTMENT OF HIGHWAYS

STANDARD DRAWING

OVERHEAD TRAFFIC SIGN

STEEL FRAME FOR MOUNTING 20.00 < WIDTH LENGTH ⩽ 28.00

DESIGNED : D.O.H. & CONSULTANTS	CHECKED : BUREAU OF LOCATION & DESIGN	DATE : OCT 2015
SUBMITTED : (DIRECTOR OF LOCATION & DESIGN BUREAU)		SCALE : AS SHOWN
APPROVED : (FOR DIRECTOR GENERAL)		DWG NO. RS–406
		SHEET NO. 68

REF.	REVISION	SIGNATURE	DATE

D:\std dwg 2015\RS-406(REV00)

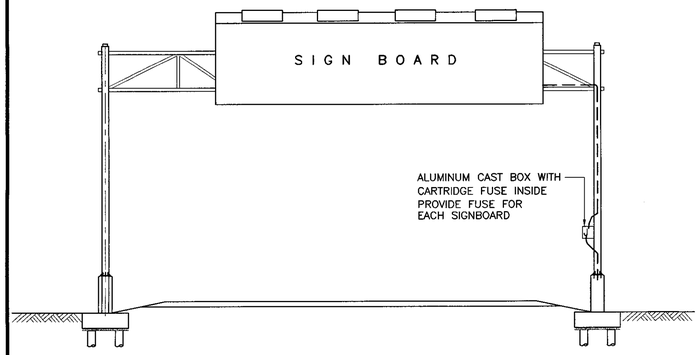

TYPICAL ILLUMINATED SIGN AT GRADE HIGHWAY

NOT TO SCALE

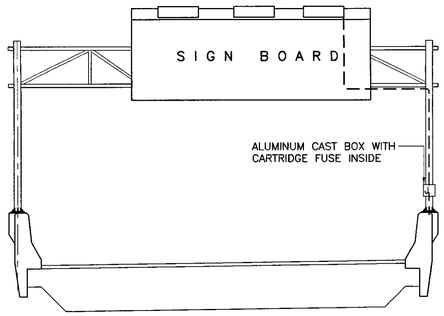

TYPICAL ILLUMINATED SIGN ON THE BRIDGE

NOT TO SCALE

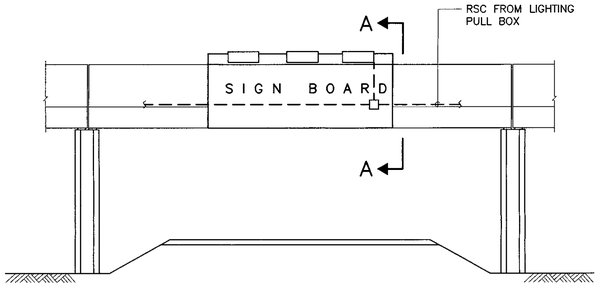

TYPICAL ILLUMINATED SIGN ON PARAPET

NOT TO SCALE

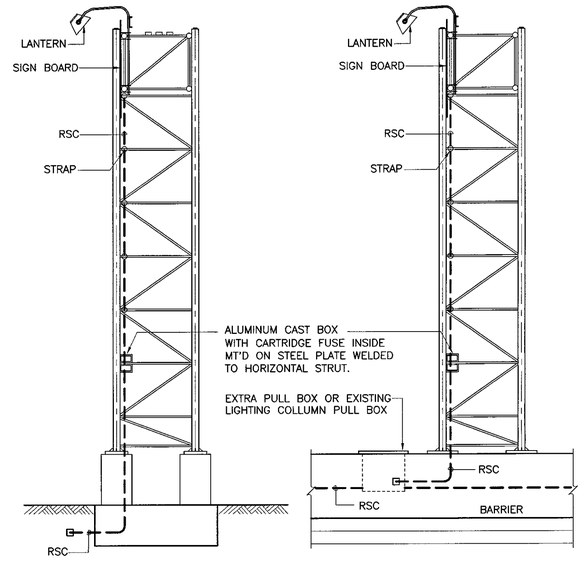

TYPICAL SUPPLY AT GRADE

NOT TO SCALE

TYPICAL SUPPLY AT BARRIER

NOT TO SCALE

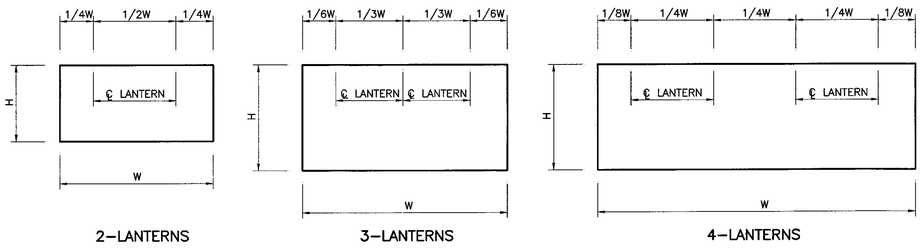

TYPICAL LANTERN LAYOUT

NOT TO SCALE

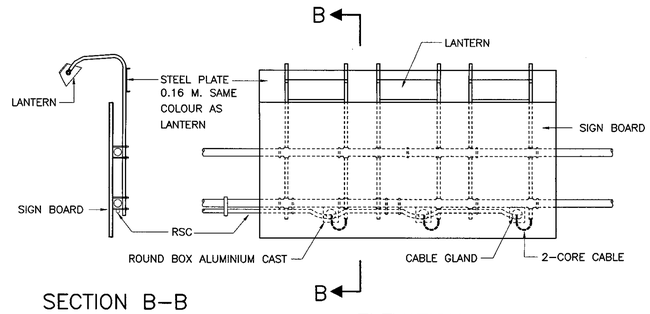

SECTION B–B

NOT TO SCALE

ELEVATION

NOT TO SCALE

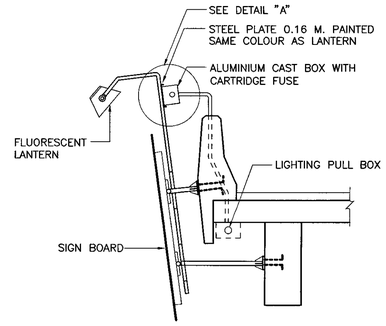

SECTION A–A

NOT TO SCALE

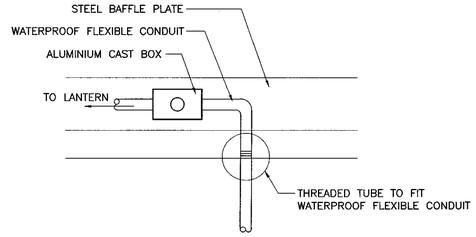

DETAIL "A"

NOT TO SCALE

RECOMMENDED OVERHEAD SIGN LIGHTING SCHEDULE FOR FLUORESCENT LANTERN				
SIGN BOARD HEIGHT	SIGN BOARD WIDTH	LANTERN TYPE	NO. OF LANTERN	REMARK
LESS THAN 2.00	1.50 – 2.50	2 X 36 W.	1	TO ADJUST ANGLE OF LANTERN FOR TRAFFIC SIGN BOARD.
"	OVER 2.50 – 4.50	"	2	
"	OVER 4.50 – 7.00	"	3	
OVER 2.00 – 3.00	OVER 2.50 – 4.50	"	2	
"	OVER 4.50 – 5.50	"	3	
"	OVER 5.50 – 7.00	"	4	

RECOMMENDED OVERHEAD SIGN LIGHTING SCHEDULE FOR METAL HALIDE LANTERN				
SIGN BOARD HEIGHT	SIGN BOARD WIDTH	LANTERN TYPE	NO. OF LANTERN	REMARK
LESS THAN 1.50	UP TO 2.50	150 W.	1	TO ADJUST ANGLE OF LANTERN FOR TRAFFIC SIGN BOARD.
OVER 1.50 – 2.00	1.50 –2.50	"	1	
OVER 1.50 – 3.00	OVER 2.50 – 3.50	"	1	
OVER 1.50 – 3.00	OVER 3.50 – 7.00	"	2	
OVER 3.00 – 3.80	OVER 2.50 – 4.50	"	2	
OVER 3.00 – 3.80	OVER 4.50 – 7.00	"	3	
OVER 3.80 – 5.20	OVER 2.50 – 3.50	250 W.	1	
OVER 3.80 – 5.20	OVER 3.50 – 7.00	"	2	

NOTES :

1. ILLUMINATED SIGN IS SUITABLE ONLY IN SPECIFIC LOCATIONS AND CERTAIN CONDITION, IT SHOULD BE APPLIED THE FIRM INFORMATIONS CONCERNED AND RECOMMENEDED BY THE ENGINEER

REF.	REVISION	SIGNATURE	DATE

KINGDOM OF THAILAND

MINISTRY OF TRANSPORT

DEPARTMENT OF HIGHWAYS

STANDARD DRAWING

OVERHEAD TRAFFIC SIGN
ILLUMINATED SIGN

DESIGNED : D.O.H. & CONSULTANTS	CHECKED : BUREAU OF LOCATION & DESIGN	DATE : OCT 2015
SUBMITTED : (DIRECTOR OF LOCATION & DESIGN BUREAU)		SCALE : AS SHOWN
APPROVED : (FOR DIRECTOR GENERAL)		DWG NO. RS–407
		SHEET NO. 69

D:\std dwg 2015\RS-407(REV00)

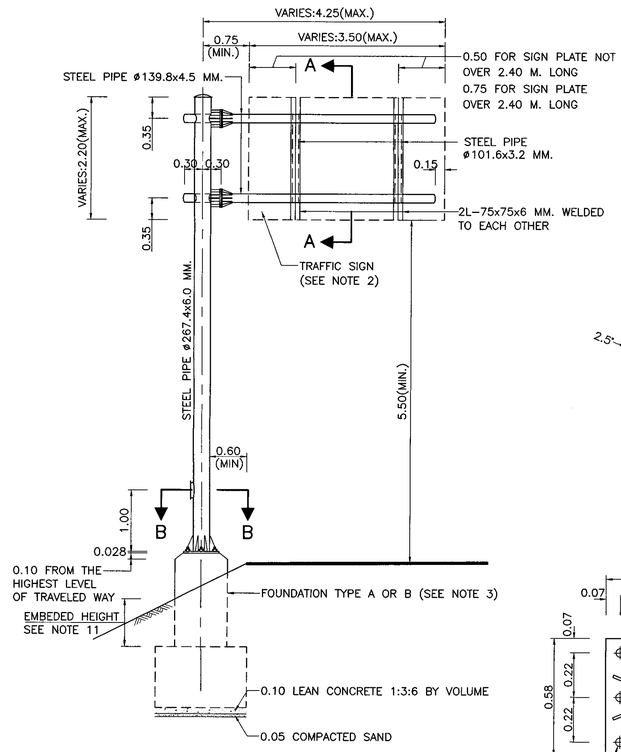

STEEL POLE FOR OVERHANGING TRAFFIC SIGN TYPE I
(AT SIDE SLOPE)
SCALE 1:50

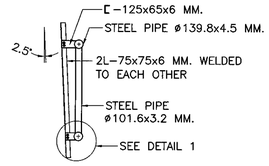

SECTION A-A
SCALE 1:50

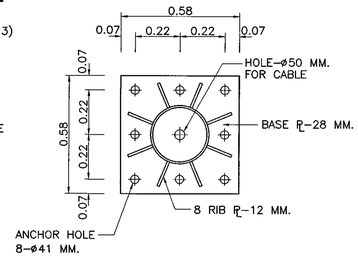

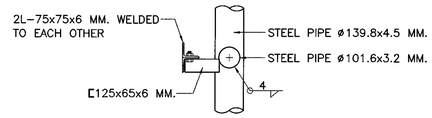

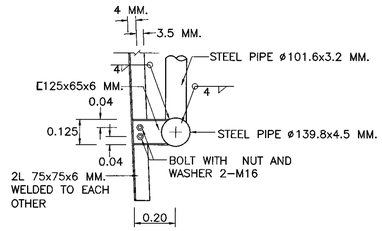

DETAIL 1
SCALE 1:15

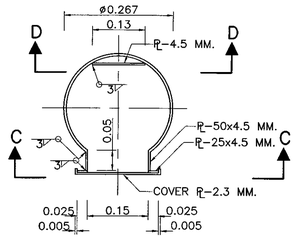

SECTOIN B-B
SCALE 1:7.5

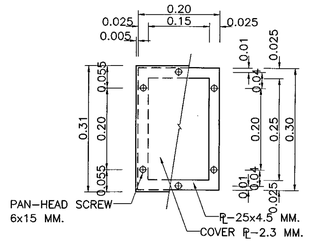

SECTOIN C-C
SCALE 1:7.5

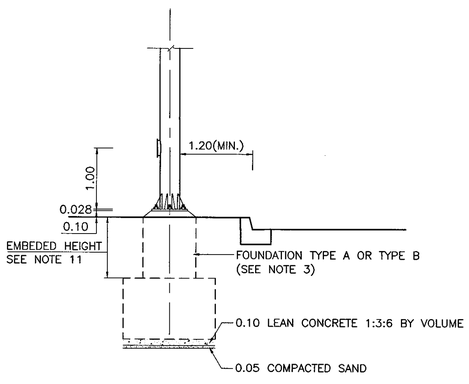

STEEL POLE FOR OVERHANGING TRAFFIC SIGN TYPE I
(AT SIDEWALK OR RAISED MEDIAN)
SCALE 1:50

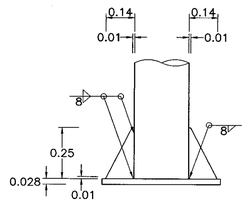

BASE OF STEEL POLE
SCALE 1:15

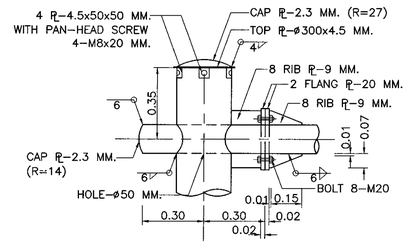

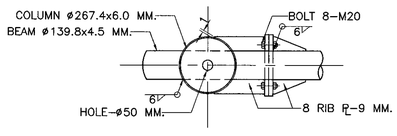

TOP OF STEEL POLE AND JOINT DETAIL
SCALE 1:15

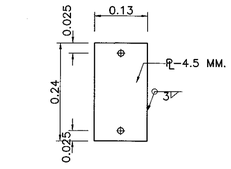

SECTOIN D-D
SCALE 1:7.5

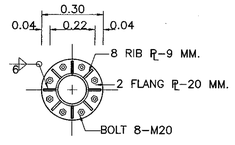

NOTES :

1. DIMENSIONS FOR WELDING SYMBOLS ARE IN MILLIMETERS, ALL OTHER DIMENSIONS ARE IN METERS UNLESS OTHERWISE INDICATED.
2. THIS DRAWING SHALL BE USED FOR TRAFFIC SIGNS, WHERE THE AREA OF THE SIGN INCLUDING THE GAPS BETWEEN PLATES IS NOT MORE THAN 52,800 SQ.CM. THE MAXIMUM LENGTH AND WIDTH OF THE SIGN SHALL NOT EXCEED 3.50 M. AND 2.20 M. RESPECTIVELY.
3. GENERALLY , THE FOUNDATION SHALL BE TYPE A OR TYPE B IN CASE OF THE PILES SHALL NOT BE DRIVEN TO THE SOIL OR THE ALLOWABLE SOIL BEARING CAPACITY UNDER THE FOUNDATION MORE THAN 10 TON PER SQUARE METER, THE FOUNDATION TYPE B SHALL BE USED.
4. THE DIMENSIONS OF STEEL PIPE SHOWN ARE OUTER DIAMETER AND THE THICKNESS OF THE PIPE.
5. STEEL PIPE SHALL CONFORM TO JIS.G3444 GRADE STK 400
6. STRUCTURAL STEEL SECTION SHALL CONFORM TO TIS. 1227 GRADE SM-400.
7. STEEL PIPE, STRUCTURAL STEEL SECTION, STEEL PLATE, BOLTS, NUTS, AND WASHERS SHALL BE GALVANIZED ZINC COATING SHALL NOT BE LESS THAN 550 GRAMS PER SQUARE METER.
8. ALL WELEDING WORK SHALL BE CONFORM TO AWS.
9. CANTILEVER BEAM SHALL BE INSTALLED PERPENDICULAR TO THE ROADWAY ALIGNMENT. CAMBER SHALL BE PROVIDED FOR BEAM DEFLECTION.
10. HIGH-STRENGTH BOLT SHALL BE CONFORM TO TIS.291 OR ASTM-A325.
11. MININUM EMBEDED HEIGHT IS 1.00 M. FOR SPREAD FOOTING

KINGDOM OF THAILAND

MINISTRY OF TRANSPORT
DEPARTMENT OF HIGHWAYS

STANDARD DRAWING

OVERHANG TRAFFIC SIGN
STEEL POLE TYPE I FOR SIGN PLATES
NOT MORE THAN 52,800 SQ.CM.

DESIGNED : D.O.H. & CONSULTANTS	**CHECKED :** BUREAU OF LOCATION & DESIGN	**DATE :** OCT 2015	
SUBMITTED : (DIRECTOR OF LOCATION & DESIGN BUREAU)		**SCALE :** AS SHOWN	
APPROVED : (FOR DIRECTOR GENERAL)		**DWG NO.** RS-501	
		SHEET NO. 70	

REF.	REVISION	SIGNATURE	DATE

D:\Std dwg 2015\RS\RS-501(REV.00).dgn

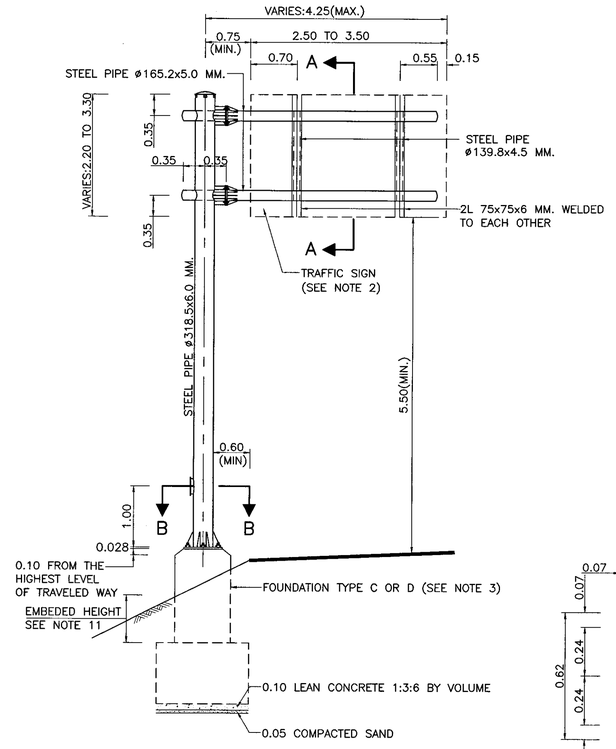

STEEL POLE FOR OVERHANGING TRAFFIC SIGN TYPE II
(AT SIDE SLOPE)
SCALE 1:50

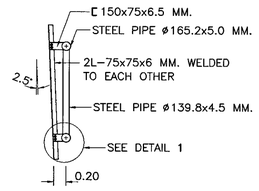

SECTION A-A
SCALE 1:50

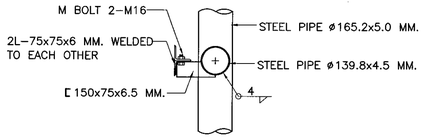

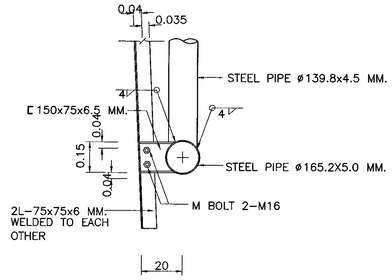

DETAIL 1
SCALE 1:15

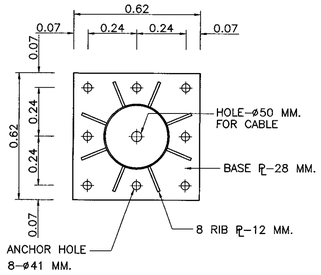

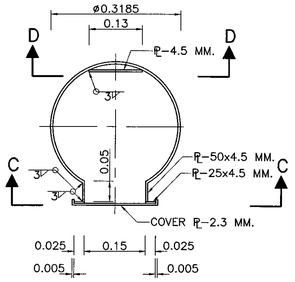

SECTOIN B-B
SCALE 1:7.5

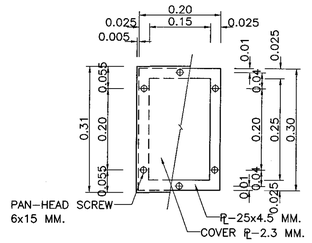

SECTOIN C-C
SCALE 1:7.5

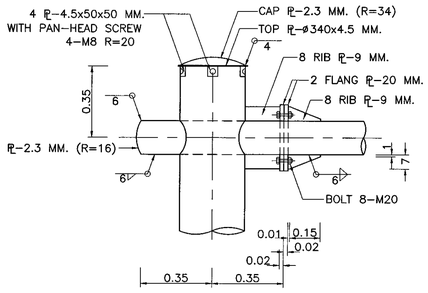

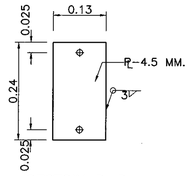

SECTOIN D-D
SCALE 1:7.5

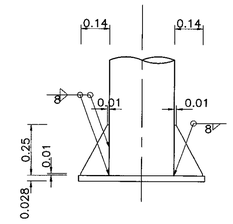

BASE OF STEEL POLE
SCALE 1:15

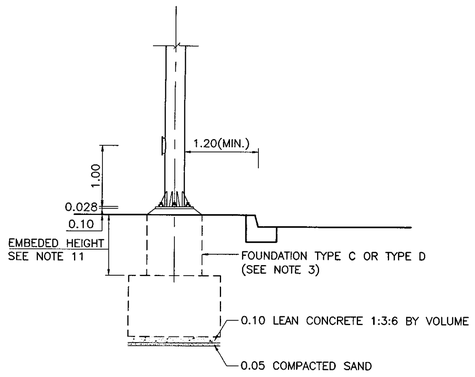

STEEL POLE FOR OVERHANGING TRAFFIC SIGN TYPE II
(AT SIDEWALK OR RAISED MEDIAN)
SCALE 1:50

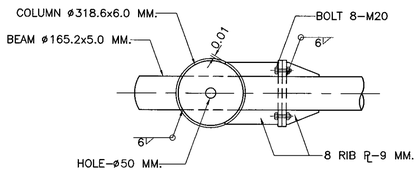

TOP OF STEEL POLE AND JOINT DETAIL
SCALE 1:15

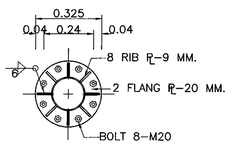

NOTES :

1. DIMENSIONS FOR WELDING SYMBOLS ARE IN MILLIMETERS, ALL OTHER DIMENSIONS ARE IN METERS UNLESS OTHERWISE INDICATED.
2. THIS DRAWING SHALL BE USED FOR TRAFFIC SIGNS, WHERE THE AREA OF THE SIGN IS NOT MORE THAN 108,000 SQ.CM. THE MAXIMUM LENGTH AND WIDTH OF THE SIGN SHALL NOT EXCEED 3.50 M. AND 3.30 RESPECTIVELY.
3. GENERALLY , THE FOUNDATION SHALL BE TYPE C OR TYPE D IN CASE OF THE PILES SHALL NOT BE DRIVEN TO THE SOIL OR THE ALLOWABLE SOIL BEARING CAPACITY UNDER THE FOUNDATION MORE THAN 10 TON PER SQUARE METER, THE FOUNDATION TYPE D SHALL BE USED.
4. THE DIMENSIONS OF STEEL PIPE SHOWN ARE OUTER DIAMETER AND THE THICKNESS OF THE PIPE.
5. STEEL PIPE SHALL CONFORM TO JIS.G3444 GRADE STK 400.
6. STRUCTURAL STEEL SECTION SHALL CONFORM TO TIS. 1227 GRADE SM-400.
7. STEEL PIPE, STRUCTURAL STEEL SECTION, STEEL PLATE, BOLTS, NUTS, AND WASHERS SHALL BE GALVANIZED ZINC COATING SHALL NOT BE LESS THAN 550 GRAMS PER SQUARE METER.
8. ALL WELEDING WORK SHALL BE CONFORM TO AWS.
9. CANTILEVER BEAM SHALL BE INSTALLED PERPENDICULAR TO THE ROADWAY ALIGNMENT. CAMBER SHALL BE PROVIDED FOR BEAM DEFLECTION.
10. HIGH-STRENGTH BOLT SHALL BE CONFORM TO TIS.291 OR ASTM-A325.
11. MININUM EMBEDED HEIGHT IS 1.00 M. FOR SPREAD FOOTING

REF.	REVISION	SIGNATURE	DATE

KINGDOM OF THAILAND

MINISTRY OF TRANSPORT
DEPARTMENT OF HIGHWAYS

STANDARD DRAWING

OVERHANG TRAFFIC SIGN
STEEL POLE TYPE II FOR SIGN PLATES
NOT MORE THAN 108,000 SQ.CM.

DESIGNED : D.O.H. & CONSULTANTS	**CHECKED :** BUREAU OF LOCATION & DESIGN	**DATE :** OCT 2015
SUBMITTED : (DIRECTOR OF LOCATION & DESIGN BUREAU)		**SCALE :** AS SHOWN
APPROVED : (FOR DIRECTOR GENERAL)		**DWG NO.** RS-502
		SHEET NO. 71

D:\std dwg 2015\RS-502(REV00)

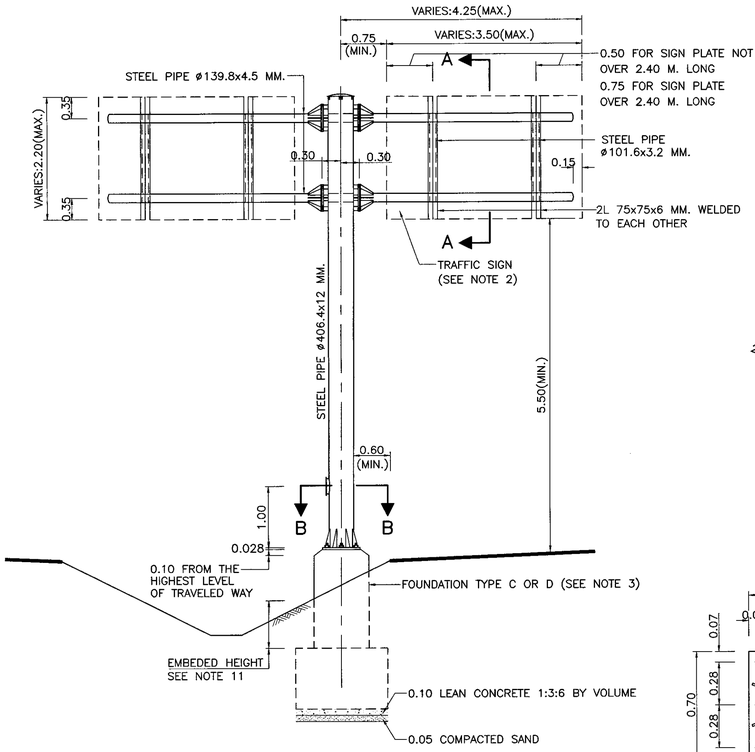

STEEL POLE FOR OVERHANGING TRAFFIC SIGN TYPE III
(AT SIDE SLOPE)
SCALE 1:50

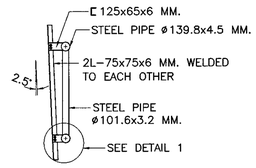

SECTION A-A
SCALE 1:50

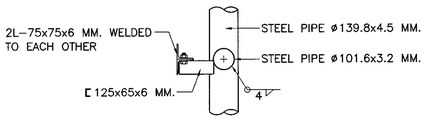

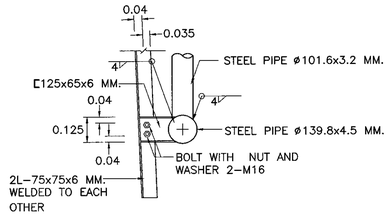

DETAIL 1
SCALE 1:15

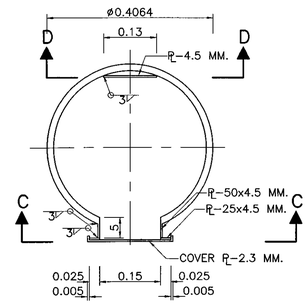

SECTOIN B-B
SCALE 1:7.5

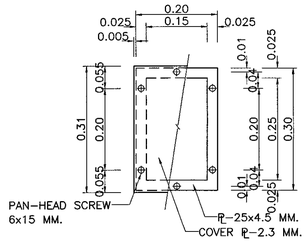

SECTOIN C-C
SCALE 1:7.5

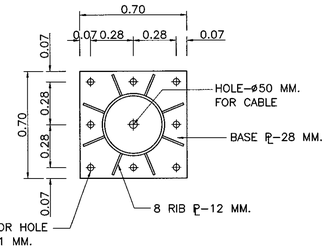

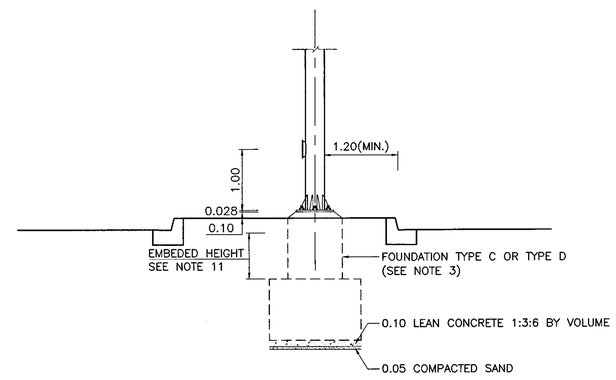

STEEL POLE FOR OVERHANGING TRAFFIC SIGN TYPE III
(AT SIDEWALK OR RAISED MEDIAN)
SCALE 1:50

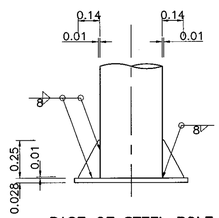

BASE OF STEEL POLE
SCALE 1:20

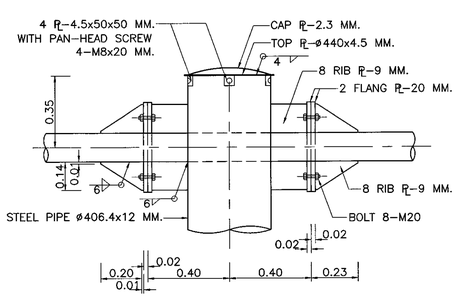

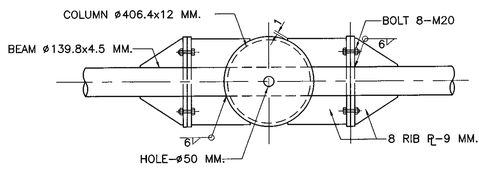

TOP OF STEEL POLE AND JOINT DETAIL
SCALE 1:15

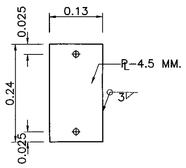

SECTOIN D-D
SCALE 1:7.5

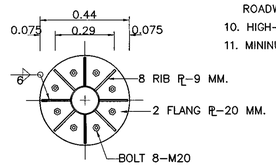

NOTES :

1. DIMENSIONS FOR WELDING SYMBOLS ARE IN MILLIMETERS, ALL OTHER DIMENSIONS ARE IN METERS UNLESS OTHERWISE INDICATED
2. THIS DRAWING SHALL BE USED FOR TRAFFIC SIGNS. WHERE THE AREA OF THE SIGN INCLUDING THE GAPS BETWEEN PLATES IS NOT MORE THAN 2 X 52,800 SQ. CM. THE MAXIMUM LENGTH AND WIDTH OF THE SIGN SHALL NOT EXCEED 350 CM. AND 220 CM. RESPECTIVELY.
3. GENERALLY , THE FOUNDATION SHALL BE TYPE C OR TYPE D IN CASE OF THE PILES SHALL NOT BE DRIVEN TO THE SOIL OR THE ALLOWABLE SOIL BEARING CAPACITY UNDER THE FOUNDATION MORE THAN 10 TON PER SQUARE METER, THE FOUNDATION TYPE D SHALL BE USED.
4. THE DIMENSIONS OF STEEL PIPE SHOWN ARE OUTER DIAMETER AND THE THICKNESS OF THE PIPE.
5. STEEL PIPE SHALL CONFORM TO JIS.G3444 GRADE STK 400
6. STRUCTURAL STEEL SECTION SHALL CONFORM TO TIS. 1227 GRADE SM-400.
7. STEEL PIPE, STRUCTURAL STEEL SECTION, STEEL PLATE, BOLTS, NUTS, AND WASHERS SHALL BE GALVANIZED ZINC COATING SHALL NOT BE LESS THAN 550 GRAMS PER SQUARE METER.
8. ALL WELEDING WORK SHALL BE CONFORM TO AWS.
9. CANTILEVER BEAM SHALL BE INSTALLED PERPENDICULAR TO THE ROADWAY ALIGNMENT. CAMBER SHALL BE PROVIDED FOR BEAM DEFLECTION.
10. HIGH-STRENGTH BOLT SHALL BE CONFORM TO TIS.291 OR ASTM-A325.
11. MININUM EMBEDED HEIGHT IS 1.00 M. FOR SPREAD FOOTING

REF.	REVISION	SIGNATURE	DATE

KINGDOM OF THAILAND

MINISTRY OF TRANSPORT
DEPARTMENT OF HIGHWAYS

STANDARD DRAWING

OVERHANG TRAFFIC SIGN
STEEL POLE TYPE III FOR SIGN PLATES
NOT MORE THAN 2x52,800 SQ.CM.

DESIGNED : D.O.H. & CONSULTANTS	**CHECKED :** BUREAU OF LOCATION & DESIGN	**DATE :** OCT 2015
SUBMITTED : (DIRECTOR OF LOCATION & DESIGN BUREAU)		**SCALE :** AS SHOWN
APPROVED : (FOR DIRECTOR GENERAL)		**DWG NO.** RS-503
		SHEET NO. 72

D:\std dwg 2015\RS-503(REV00)

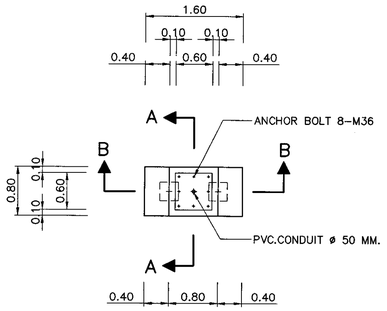

PLAN OF FOUNDATION TYPE A
SCALE 1 : 50

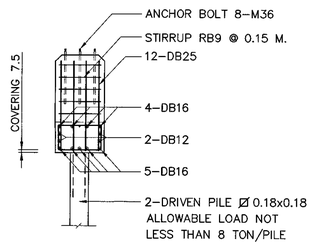

SECTION A– A
SCALE 1 : 50

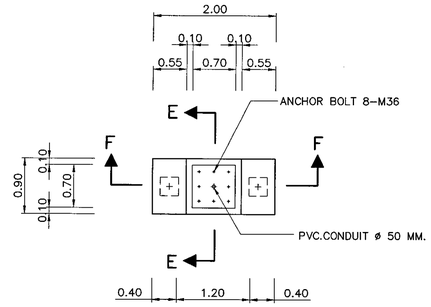

PLAN OF FOUNDATION TYPE C
SCALE 1 : 50

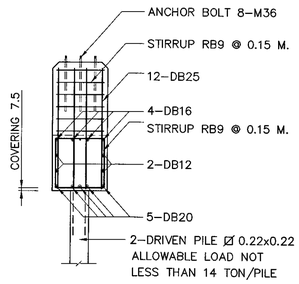

SECTION E – E
SCALE 1 : 50

DIMENSION OF STEEL FRAME FOR ANCHOR BOLTS

TYPE OF STEEL POLE	a	b
TYPE I	0.58	0.22
TYPE II	0.62	0.24
TYPE III	0.70	0.28

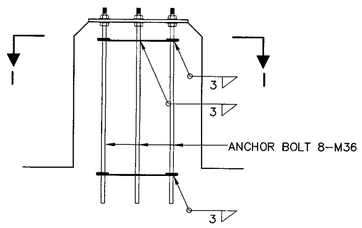

ANCHOR BOLT DETAIL
SCALE 1 : 50

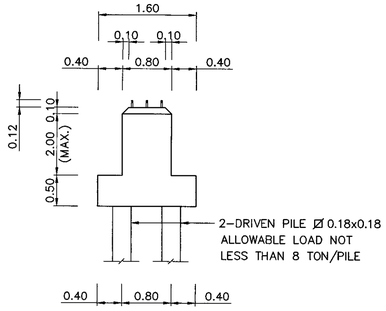

SIDE ELEVATION OF FOUNDATION TYPE A
SCALE 1 : 50

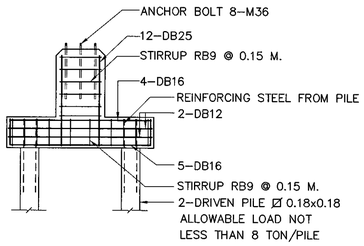

SECTION B – B
SCALE 1 : 50

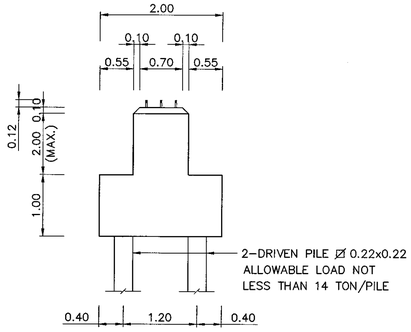

SIDE ELEVATION OF FOUNDATION TYPE C
SCALE 1 : 50

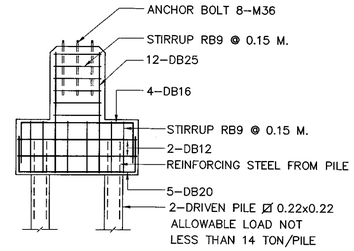

SECTION F – F
SCALE 1 : 50

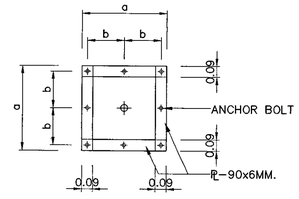

SECTION I – I FEEL FRAME FOR ANCHOR BOLTS
SCALE 1 : 50

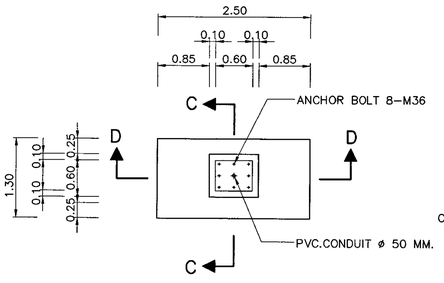

PLAN OF FOUNDATION TYPE B
SCALE 1 : 50

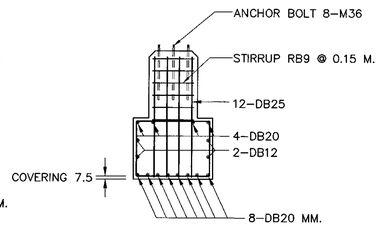

SECTION C – C
SCALE 1 : 50

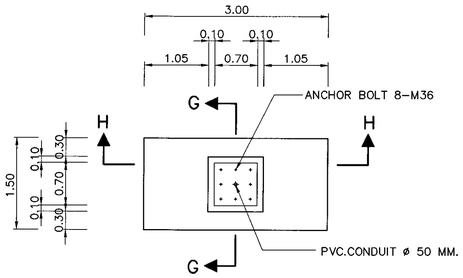

PLAN OF FOUNDATION TYPE D
SCALE 1 : 50

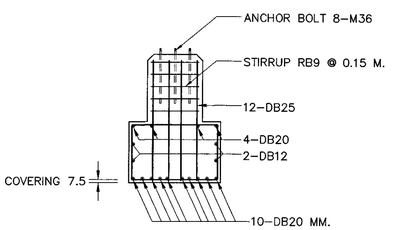

SECTION G – G
SCALE 1 : 50

NOTES :

1. ALL DIMENSIONS ARE IN METERS UNLESS OTHERWISED INDICATED
2. IN CASE OF FOUNDATION ARE NOT CONSTRRUCTED AS SPECIFIED IN THIS DRAWING, THE CONTRACTOR SHALL BE RESPONSIBLE FOR ADAPTATION TO CONSTRUCTION AS APPROVED BY THE ENGINEER.
3. CONCRETE SHALL HAVE A MINIMUM ULTIMATE COMPRESSIVE STRENGTH OF 30 MPa. (306 KSC.) FOR 15x15x15 CM. CUBE AT 28 DAY. CEMENT SHALL TO TIS 15 TYPE I PORTLAND CEMENT OR APPROVAL TYPE.
4. REINFORCING STEEL SHALL CONFORM TO TIS.20 GRADE SR.24 FOR ROUND BARS AND TIS.24 GRADE SD 40 FOR ALLOWABLE BEARING
5. SPREAD FOUNDATION MAY BE USED WHEN ONLY ALLOWABLE BEARING CAPACITY OF EXISTING SOIL IS OVER 100 KN/M^2 (10 TON/M^2)
6. R.C. PILE OR P.C. PILE SHALL BE SQUARE SECTION AND CONFORMED TO TIS.395 OR TIS.396 AND DOWEL BARS SHALL BE 4–DB25 (FULL LENGTH OF PILE)
7. SAFETY FACTOR OF 2.00 MUST BE APPLIED TO CALCULATE THE ULTIMATE PILE RESISTANCE, THE FINAL PILE TIP ELEVATION SHALL BE APPROVED BY THE ENGINEER.
8. HIGH–STRENGTH BOLTS SHALL BE COMFORM TO TIS291 OR ASTM–A325 AND ANCHOR BOLTS SHALL BE CONFORN TO ASTM–A307

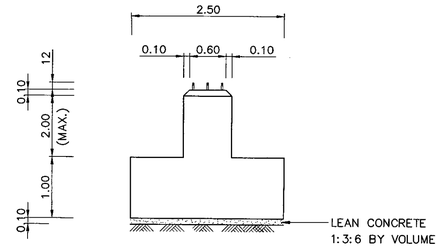

SIDE ELEVATION OF FOUNDATION TYPE B
SCALE 1 : 50

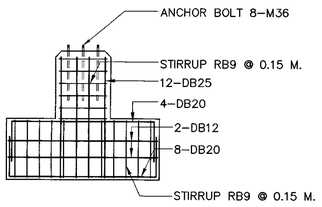

SECTION D – D
SCALE 1 : 50

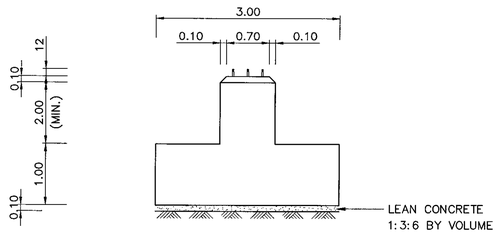

SIDE ELEVATION OF FOUNDATION TYPE D
SCALE 1 : 50

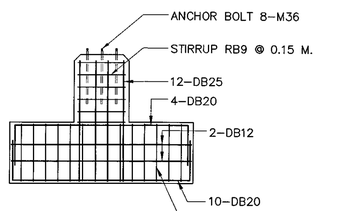

SECTION H – H
SCALE 1 : 50

REF.	REVISION	SIGNATURE	DATE

KINGDOM OF THAILAND

MINISTRY OF TRANSPORT
DEPARTMENT OF HIGHWAYS

STANDARD DRAWING

OVERHANG TRAFFIC SIGN
FOOTING DETAILS

DESIGNED : D.O.H. & CONSULTANTS	**CHECKED :** BUREAU OF LOCATION & DESIGN	**DATE :** OCT 2015
SUBMITTED : (DIRECTOR OF LOCATION & DESIGN BUREAU)		**SCALE :** AS SHOWN
APPROVED : (FOR DIRECTOR GENERAL)		**DWG NO.** RS–504
		SHEET NO. 73

D:\std dwg 2015\RS-504(REV00)

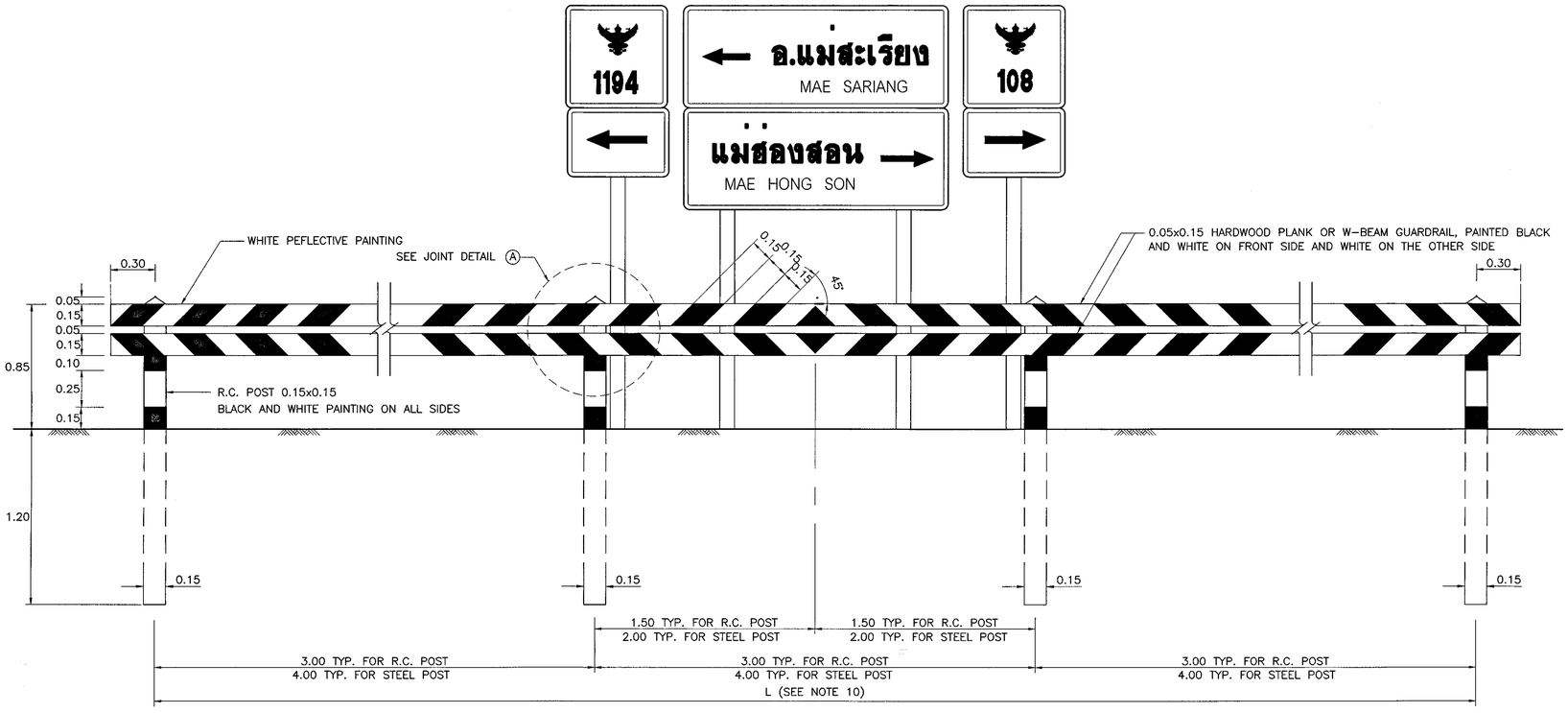

FRONT ELEVATION

SCALE 1 : 20

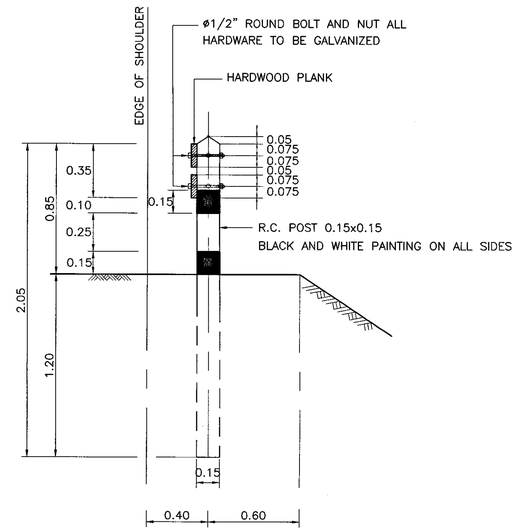

SIDE VIEW FOR TIMBER BARRICADE

SCALE 1 : 20

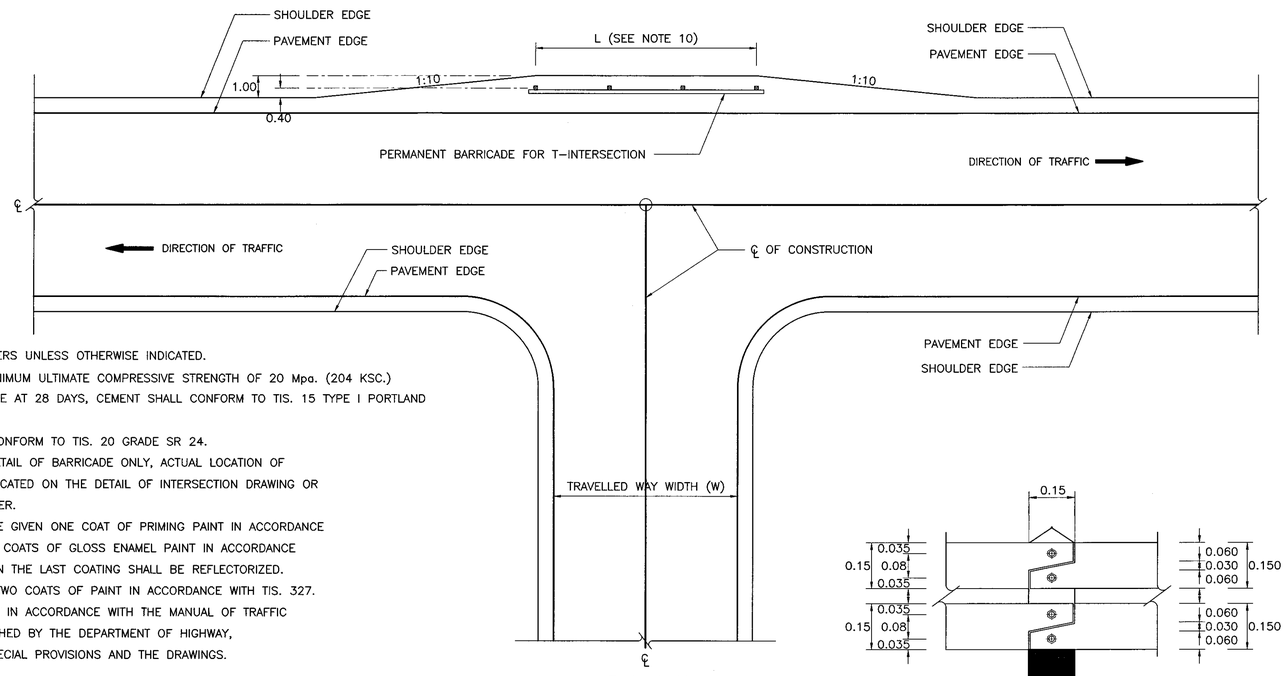

P L A N

SCALE 1 : 125

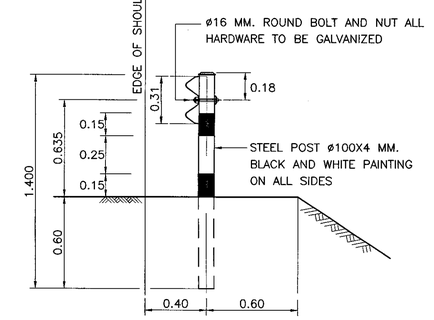

SIDE VIEW FOR W-BEAM GUARDRAIL (ALTERNATIVE)

SCALE 1 : 20

JOINT DETAIL "A" FOR HARDWOOD PLANK

SCALE 1 : 10

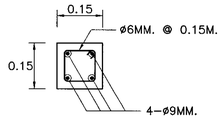

R.C. POST SECTION

SCALE 1 : 10

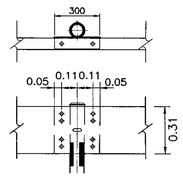

JOINT DETAIL "A" FOR W-BEAM GUARDRAIL

SCALE 1 : 20

NOTE :

1. ALL DIMENSIONS ARE IN METERS UNLESS OTHERWISE INDICATED.
2. CONCRETE SHALL HAVE A MINIMUM ULTIMATE COMPRESSIVE STRENGTH OF 20 Mpa. (204 KSC.) FOR 15 x 15 x 15 CM. CUBE AT 28 DAYS, CEMENT SHALL CONFORM TO TIS. 15 TYPE I PORTLAND CEMENT OR APPROVAL TYPE.
3. REINFORCING STEEL SHALL CONFORM TO TIS. 20 GRADE SR 24.
4. THE DRAWING SHOWN THE DETAIL OF BARRICADE ONLY, ACTUAL LOCATION OF BARRICADE SHALL BE AS INDICATED ON THE DETAIL OF INTERSECTION DRAWING OR AS DIRECTED BY THE ENGINEER.
5. ALL WOOD PORTION SHALL BE GIVEN ONE COAT OF PRIMING PAINT IN ACCORDANCE WITH TIS. 357 AND TO FIELD COATS OF GLOSS ENAMEL PAINT IN ACCORDANCE WITH TIS. 327 WHITE PAINT IN THE LAST COATING SHALL BE REFLECTORIZED.
6. R.C. POST SHALL BE GIVEN TWO COATS OF PAINT IN ACCORDANCE WITH TIS. 327.
7. ALL TRAFFIC SIGNS SHALL BE IN ACCORDANCE WITH THE MANUAL OF TRAFFIC CONTROL DEVICES AS PUBLISHED BY THE DEPARTMENT OF HIGHWAY, THE SPECIFICATIONS, THE SPECIAL PROVISIONS AND THE DRAWINGS.
8. CASE OF TYPICAL MATERIAL.
   8.1 IN CASE OF HARDWOOD PLANK COMPATIBLE WITH R.C. POST 0.15x0.15 M.
   8.2 IN CASE OF W-BEAM GUARDRAIL COMPATIBLE WITH STEEL POST DIAMETER 100 MM. AND THICKNESS 4 MM.
9. GUARDRAIL SHALL BE REFERENCED TO DWG. NO. RS-603 AND CONFORM TO TIS. 248.
10. LENGTH OF BARRICADE (L) NOT LESS THAN TRAVELLED WAY WIDTH (W).
    10.1 IN CASE OF R.C. POST, L = 9.00 (MIN.).
    10.2 IN CASE OF STEEL POST, L = 12.00 (MIN.).
11. BARRICADE MATERIAL SHALL BE CONSIDERED WITH THE FIRM INFORMATION CONCERNED AND RECOMMENDED BY THE ENGINEER.

REF.	REVISION	SIGNATURE	DATE

KINGDOM OF THAILAND

MINISTRY OF TRANSPORT

DEPARTMENT OF HIGHWAYS

STANDARD DRAWING

BARRICADE
TWO LANES AT T-INTERSECTION

DESIGNED : D.O.H. & CONSULTANTS	**CHECKED :** BUREAU OF LOCATION & DESIGN	**DATE :** OCT 2015
SUBMITTED : (DIRECTOR OF LOCATION & DESIGN BUREAU)		**SCALE :** AS SHOWN
APPROVED : (FOR DIRECTOR GENERAL)		**DWG NO.** RS-601
		SHEET NO. 74

D:\std dwg 2015\RS-601(REV00)

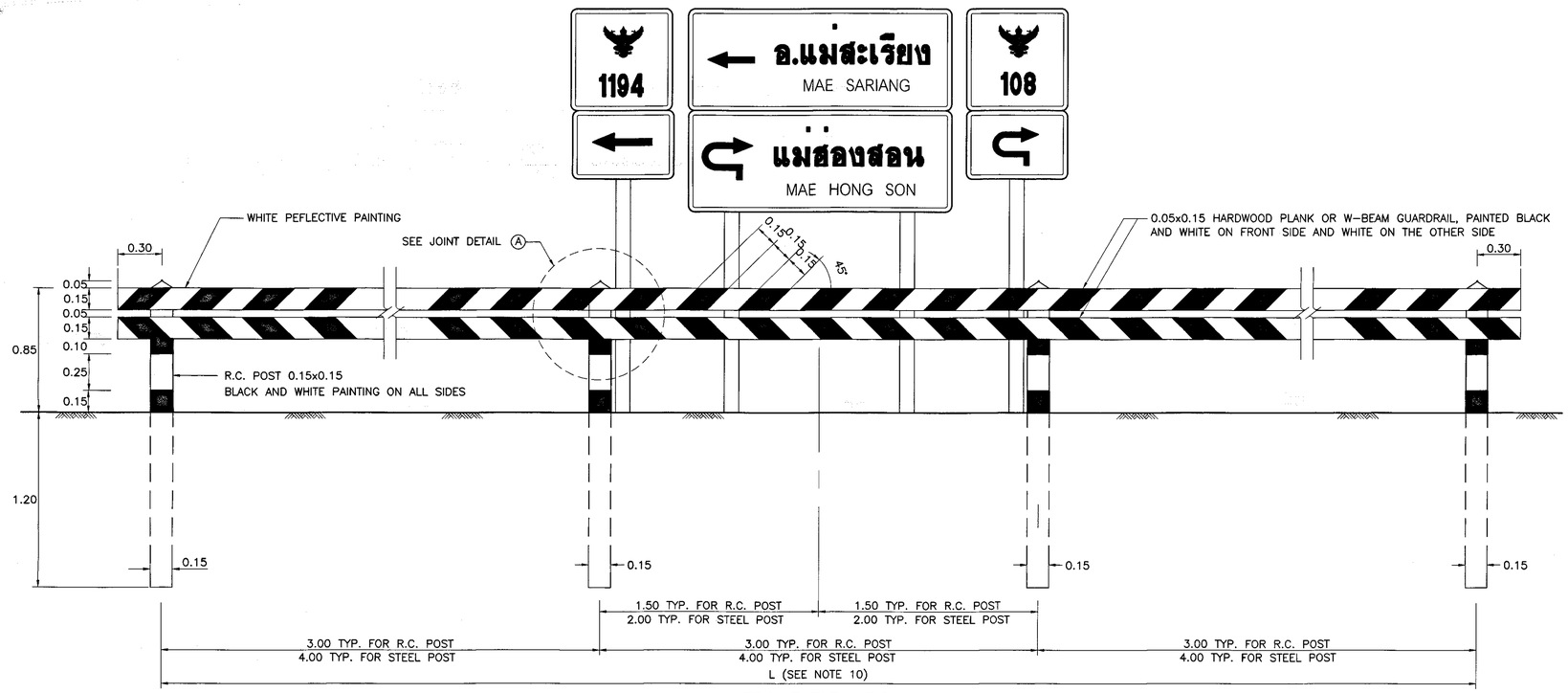

FRONT ELEVATION

SCALE 1 : 20

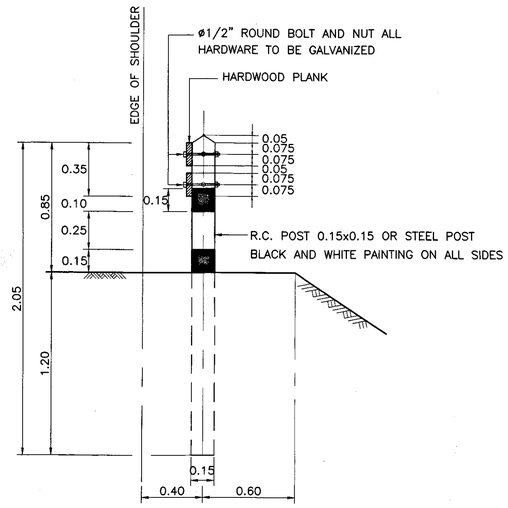

SIDE VIEW FOR TIMBER BARRICADE

SCALE 1 : 20

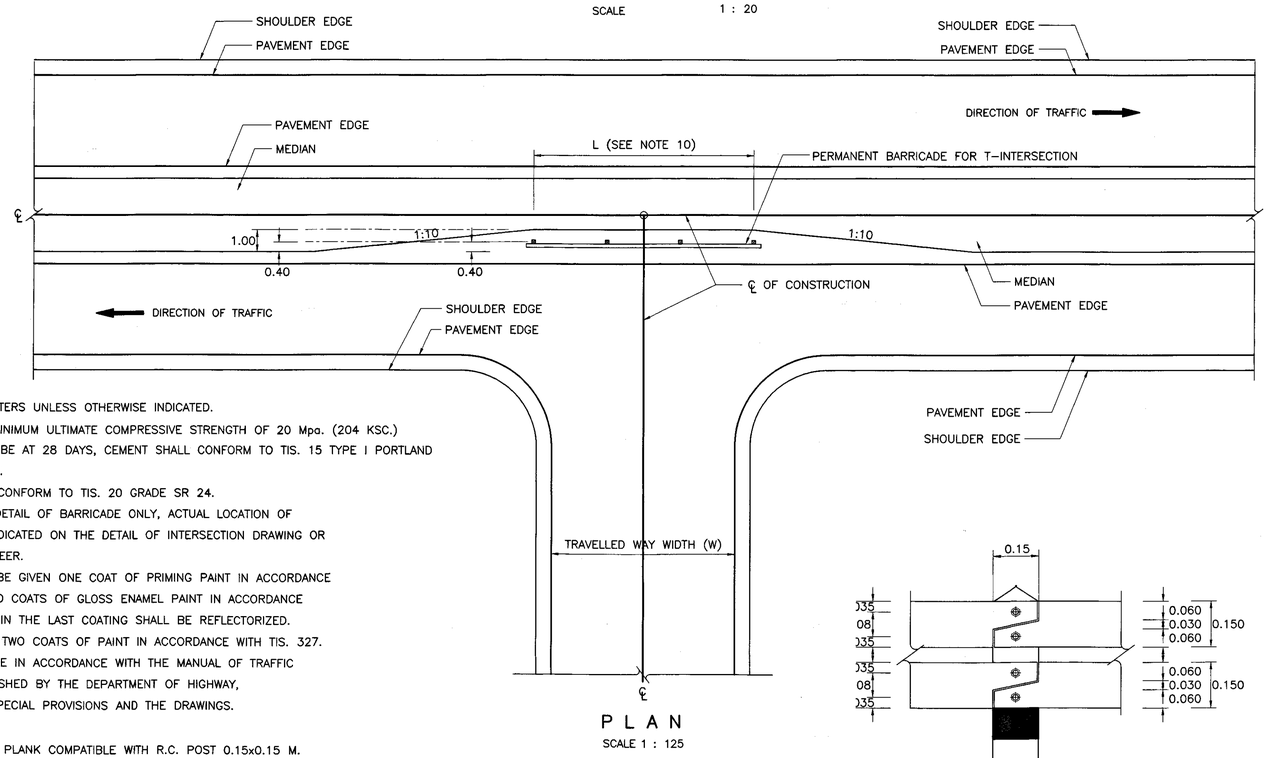

P L A N

SCALE 1 : 125

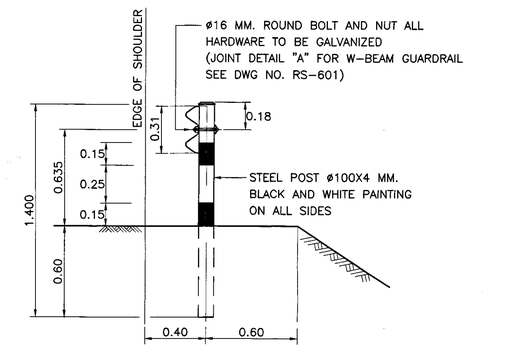

SIDE VIEW FOR W-BEAM GUARDRAIL (ALTERNATIVE)

SCALE 1 : 20

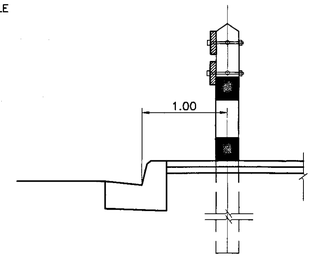

BARRICADE INSTALLATION AT RAISED MEDIAN

NOT TO SCALE

NT DETAIL "A" FOR HARDWOOD PLANK

E 1 : 10

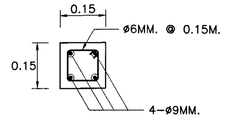

R.C. POST SECTION

SCALE 1 : 10

NOTE :

1. ALL DIMENSIONS ARE IN METERS UNLESS OTHERWISE INDICATED.
2. CONCRETE SHALL HAVE A MINIMUM ULTIMATE COMPRESSIVE STRENGTH OF 20 Mpa. (204 KSC.) FOR 15 x 15 x 15 CM. CUBE AT 28 DAYS, CEMENT SHALL CONFORM TO TIS. 15 TYPE I PORTLAND CEMENT OR APPROVAL TYPE.
3. REINFORCING STEEL SHALL CONFORM TO TIS. 20 GRADE SR 24.
4. THE DRAWING SHOWN THE DETAIL OF BARRICADE ONLY, ACTUAL LOCATION OF BARRICADE SHALL BE AS INDICATED ON THE DETAIL OF INTERSECTION DRAWING OR AS DIRECTED BY THE ENGINEER.
5. ALL WOOD PORTION SHALL BE GIVEN ONE COAT OF PRIMING PAINT IN ACCORDANCE WITH TIS. 357 AND TO FIELD COATS OF GLOSS ENAMEL PAINT IN ACCORDANCE WITH TIS. 327 WHITE PAINT IN THE LAST COATING SHALL BE REFLECTORIZED.
6. R.C. POST SHALL BE GIVEN TWO COATS OF PAINT IN ACCORDANCE WITH TIS. 327.
7. ALL TRAFFIC SIGNS SHALL BE IN ACCORDANCE WITH THE MANUAL OF TRAFFIC CONTROL DEVICES AS PUBLISHED BY THE DEPARTMENT OF HIGHWAY, THE SPECIFICATIONS, THE SPECIAL PROVISIONS AND THE DRAWINGS.
8. CASE OF TYPICAL MATERIAL.
   8.1 IN CASE OF HARDWOOD PLANK COMPATIBLE WITH R.C. POST 0.15x0.15 M.
   8.2 IN CASE OF W-BEAM GUARDRAIL COMPATIBLE WITH STEEL POST DIAMETER 100 MM. AND THICKNESS 4 MM.
9. GUARDRAIL SHALL BE REFERENCED TO DWG. NO. RS-603 AND CONFORM TO TIS. 248.
10. LENGTH OF BARRICADE (L) NOT LESS THAN TRAVELLED WAY WIDTH (W).
    10.1 IN CASE OF R.C. POST, L = 9.00 (MIN.).
    10.2 IN CASE OF STEEL POST, L = 12.00 (MIN.).
11. BARRICADE MATERIAL SHALL BE CONSIDERED WITH THE FIRM INFORMATION CONCERNED AND RECOMMENDED BY THE ENGINEER.
12. FOR MORE SAFETY ON MINOR ROAD THE CHANNELIZATION DESIGN SHALL BE CONSIDERED UNDER SITE CONDITIONS AND APPROVAL OF THE ENGINEER.

REF.	REVISION	SIGNATURE	DATE

KINGDOM OF THAILAND

MINISTRY OF TRANSPORT

DEPARTMENT OF HIGHWAYS

STANDARD DRAWING

BARRICADE
MULTILANES AT T-INTERSECTION

DESIGNED : D.O.H. & CONSULTANTS	CHECKED : BUREAU OF LOCATION & DESIGN	DATE : OCT 2015
SUBMITTED : (DIRECTOR OF LOCATION & DESIGN BUREAU)		SCALE : AS SHOWN
APPROVED : (FOR DIRECTOR GENERAL)		DWG NO. RS-602
		SHEET NO. 75

D:\std dwg 2015\RS-602(REV00)

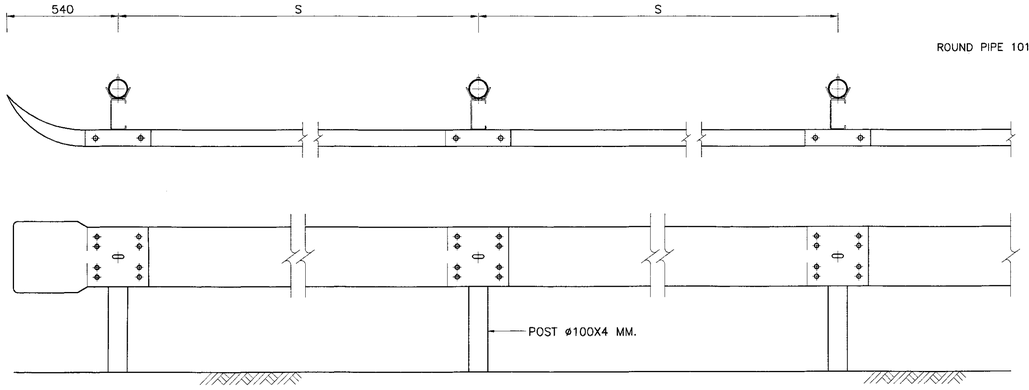

PLAN AND SECTION
NOT TO SCALE

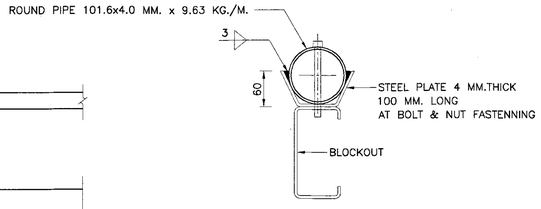

DETAIL "A"
NOT TO SCALE

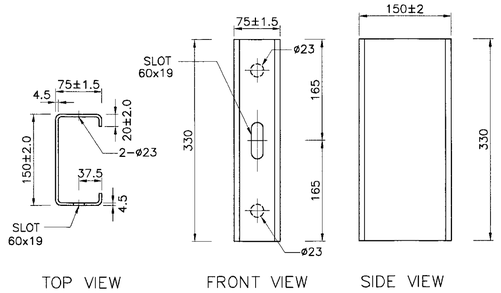

BLOCKOUT DETAILS
SCALE 1 : 5

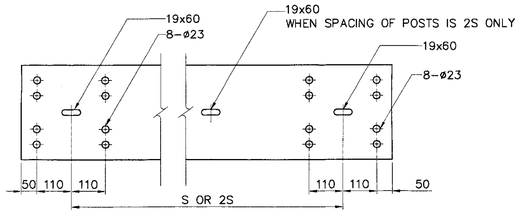

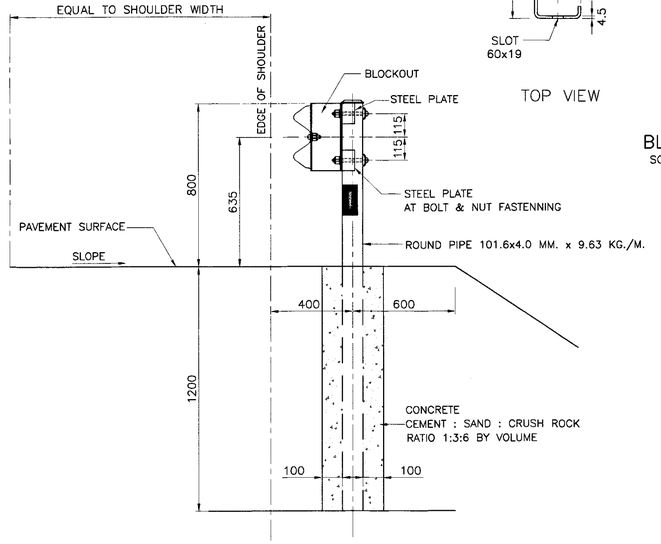

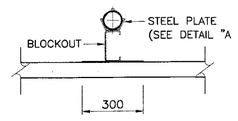

BACKUP PLATE
SCALE 1 : 15

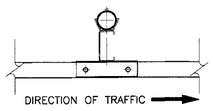

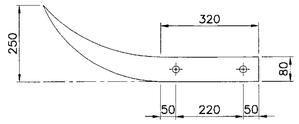

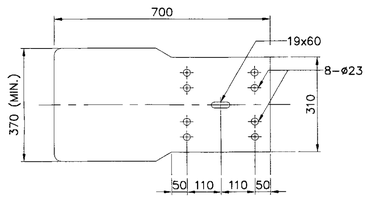

TERMINAL SECTION
SCALE 1 : 10

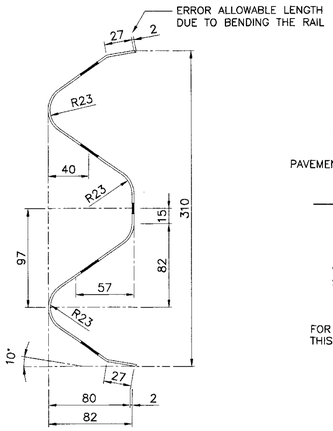

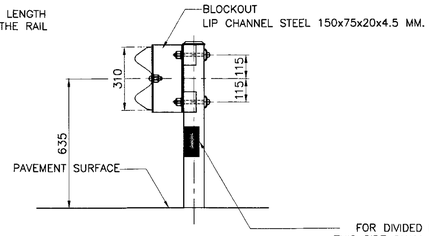

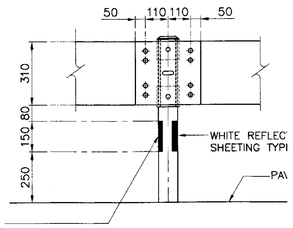

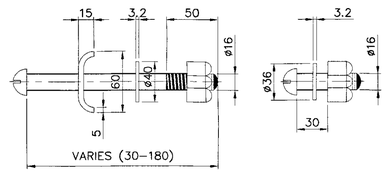

BOLT & NUT
SCALE 1 : 3

RAIL SECTION
SCALE 1 : 3

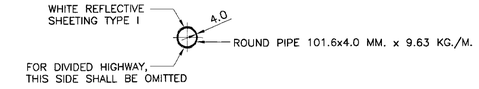

POST
SCALE 1 : 15

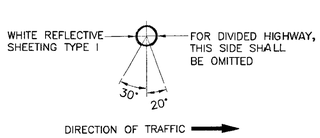

NOTES :

1. ALL DIMENSIONS ARE IN MILLIMETERS UNLESS OTHERWISE INDICATED.
2. GUARDRAIL SHALL CONFORM TO THE FOLLOWING REQUIREMENT :
   2.1 STEEL RAIL SHALL BE MADE FROM STEEL OF THICKNESS NOT LESS THAN THE MINIMUM THICKNESS SPECIFIED FOR EACH CLASS OF RAIL AND SHALL BE GALVANIZED WITH THE MINIMUM WEIGHT OF ZINC COATING ACCORDING TO THE TYPE OF RAIL AS SPECIFIED IN TABLE BELOW.

RAIL		MIN.RAIL THICKNESS (MILLIMETER)	MIN.WEIGHT OF ZINC COATING (GRAMS PER SQUAREMETER)
CLASS	TYPE		
1	1	3.2	550
	2	3.2	1,100
2	1	2.5	550
	2	2.5	1,100

2.2 MECHANICAL PROPERTIES OF RAIL

RAIL		MIN.ULTIMATE TENSILES STRENGTH (KG./MM.^{2})	MIN.PERCENTAGE OF ELONGATION	MAX. DEFLECTION			
				MAX. LOAD TRAFFIC FACE UP		MAX. LOAD TRAFFIC FACE DOWN	
CLASS	TYPE			KG.	DEFLECTION (MIN.)	KG.	DEFLECTION (MIN.)
1	1	41	21	910	50	720	50
	2	41	21	1,360	75	1,090	75
2	1	41	21	680	50	545	50
	2	41	21	910	75	720	75

   2.3 POST SHALL BE IN ACCORDANCE WITH TIS. 107.
   2.4 THE GALVANIZING OF BOLTS, NUTS, WASHERES AND SIMILAR THREADED FASTENERS SHALL BE IN ACCORDANCE WITH TIS. 171 CLASS 5.8.
   2.5 BLOCKOUT SHALL BE IN ACCORDANCE WITH TIS. 1228.
   2.6 STEEL PLATE SHALL BE IN ACCORDANCE WITH TIS. 1499 SM 400.
   2.7 ALL STEEL SHALL BE GALVANIZED ZINC COATING SHALL NOT BE LESS THAN 550 GRAMS PER SQUARE METER.
3. UNLESS OTHERWISE SPECIFIED, GUARDRAIL CLASS 1 SHALL BE USED FOR HIGHWAY CLASS D AND CLASS 1 FOR OTHER HIGHWAY CLASS, GUARDRAIL CLASS 2 SHALL BE USED.
4. IN CASE OF HIGH RESISTANCE TO CORROSION REQUIREMENT, GUARDRAIL TYPE 2 SHALL BE USED.
5. SPACING OF POSTS SHALL BE LOCATION AS FOLLOWS.

RADIUS OF CURVE R (M.)	SPACING OF POSTS S (M.)
ON TANGENT OR ⩾ 700	4.00
450 ⩽ R < 700	3.00
150 ⩽ R < 450	2.00
R < 150	1.00

*HEIGHT OF FILL H (M.)	SPACING OF POSTS S (M.)
H ⩽ 300	4.00
3.00 < H ⩽ 4.00	3.00
4.00 < H ⩽ 5.00	2.00
5.00 < H ⩽ 7.00	1.00

* FOR SIDE SLOPE 2:1 OR STEEPER

FOR HORIZONTAL CURVE WITH HIGH FILL, THE MINIMUM SPACING VALUE OF THE ONE SHALL BE GOVERN.

6. IN GENERAL, GUARDRAIL IS MORE SUITABLE THAN GUIDE POST ON HORIZONTAL CURVE SECTION WITH HIGH FILL MORE THAN 5.00 M. (AND SIDE SLOPE IS STEEPER THAN 3:1) AND NOT RECOMMENDED FOR HIGH FILL OVER 7.00 M.
7. GUARDRAIL INSTALLED IN CURVE WHERE RADIUS IS LESS THAN 50 M. SHALL BE PRE-BENT FROM THE FACTORY.
8. BACKUP PLATE OF THE SAME CLASS AND TYPE AS THE RAIL WITH INTERMEDIATE POST SHALL BE PROVIDED WHERE SPACING OF POSTS IS 2S M.
9. UNLESS OTHERWISE SPECIFIED ON THIS DRAWING, GUARDRAIL SHALL BE IN ACCORDANCE WITH TIS. 248.
10. REFLECTIVE SHEETING SHALL CONFORM TO TIS. 606 TYPE 1. (COEFFICIENT OF RETRO-REFLECTION LEVEL 1)
11. W-BEAM GUARDRAIL INSTALLATION SEE DRAWING NO. RS-605 OR RS-606.

REMARK :

THE SINGLE W-BEAM GUARDRAIL IS SUITABLE ONLY IN SPECIFIC LOCATIONS AND CERTAIN CONDITION. IF OTHER CONDITION SUCH AS DEEP VALLEYS, APPEARED OBSTACLE, HAZARD OR MOUNTAINOUS AREA, AND ROCKS ON THE FILL SLOPE WHICH MAY POSSIBLE GIVE SERIOUS DAMAGE TO VEHICLES ARE EXISTED, THE CONCRETE BARRIER OR DOUBLE W-BEAM GUARDRAIL SHOULD BE INSTALLED. IT SHOULD BE APPLIED WITH THE FIRM INFORMATION CONCERNED AND RECOMMENDED BY THE ENGINEER.

KINGDOM OF THAILAND

MINISTRY OF TRANSPORT

DEPARTMENT OF HIGHWAYS

STANDARD DRAWING

GUARDRAIL

SINGLE W-BEAM GUARDRAIL

DESIGNED : D.O.H. & CONSULTANTS	**CHECKED :** BUREAU OF LOCATION & DESIGN	**DATE :** OCT 2015	
SUBMITTED : (DIRECTOR OF LOCATION & DESIGN BUREAU)		**SCALE :** AS SHOWN	
APPROVED : (FOR DIRECTOR GENERAL)		**DWG NO.** RS-603	
		SHEET NO. 76/R1	

REV.	REVISION	SIGNATURE	DATE
REV.1	REVISION 1/2017		JUN 2017

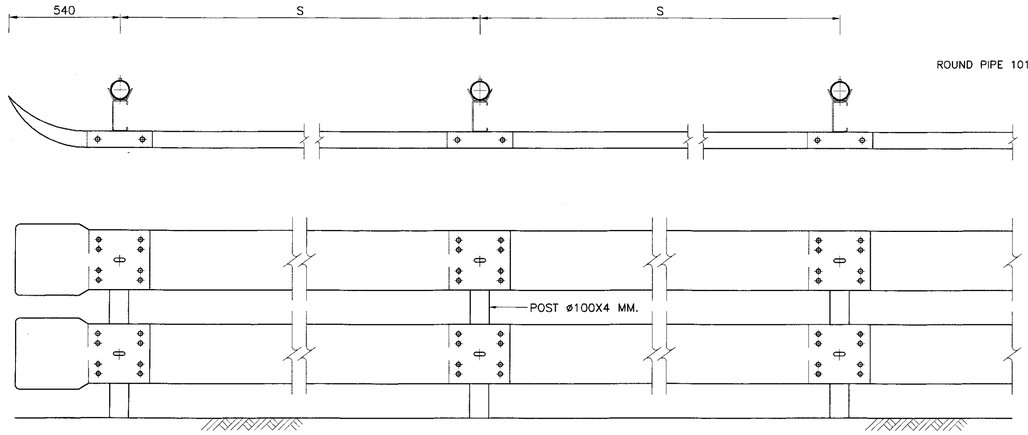

PLAN AND SECTION
NOT TO SCALE

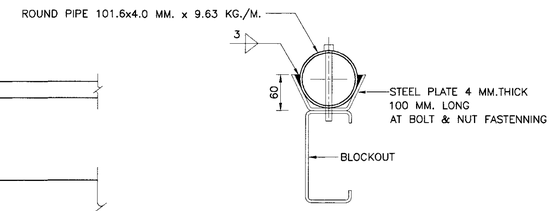

DETAIL "A"
NOT TO SCALE

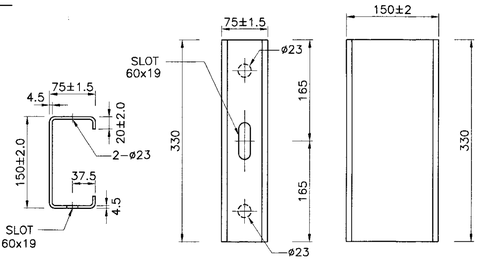

TOP VIEW FRONT VIEW SIDE VIEW

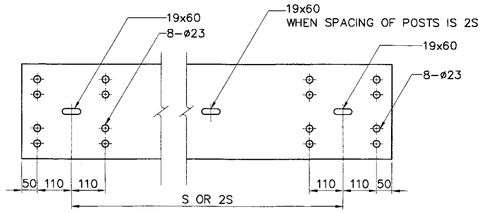

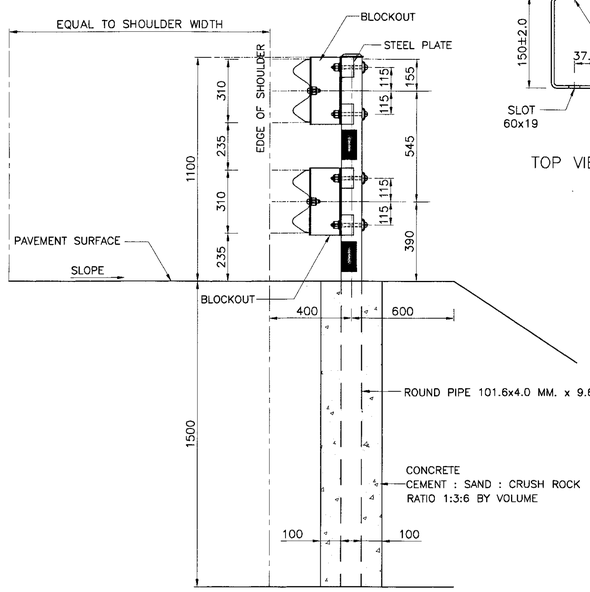

BLOCKOUT DETAILS
SCALE 1 : 5

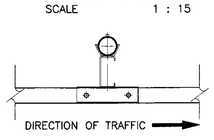

BACKUP PLATE
SCALE 1 : 15

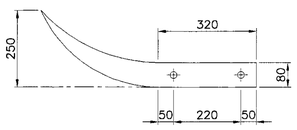

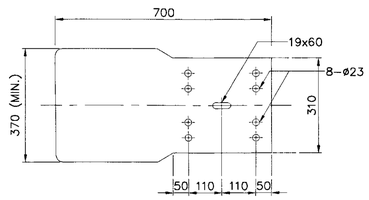

TERMINAL SECTION
SCALE 1 : 10

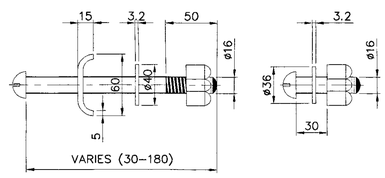

BOLT & NUT
SCALE 1 : 3

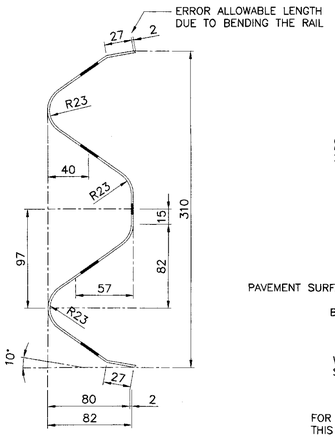

RAIL SECTION
SCALE 1 : 3

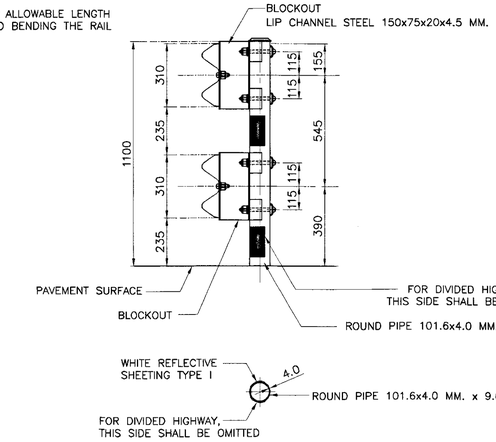

POST
SCALE 1 : 15

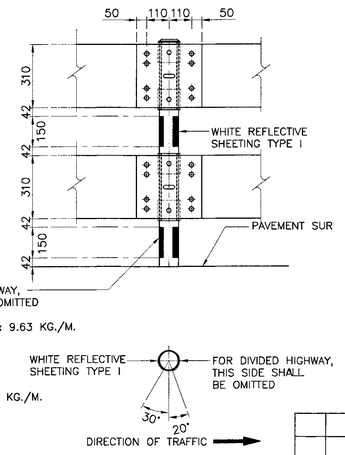

NOTES :

1. ALL DIMENSIONS ARE IN MILLIMETERS UNLESS OTHERWISE INDICATED.
2. GUARDRAIL SHALL CONFORM TO THE FOLLOWING REQUIREMENT :
   2.1 STEEL RAIL SHALL BE MADE FROM STEEL OF THICKNESS NOT LESS THAN THE MINIMUM THICKNESS SPECIFIED FOR EACH CLASS OF RAIL AND SHALL BE GALVANIZED WITH THE MINIMUM WEIGHT OF ZINC COATING ACCORDING TO THE TYPE OF RAIL AS SPECIFIED IN TABLE BELOW.

RAIL		MIN.RAIL THICKNESS (MILLIMETER)	MIN.WEIGHT OF ZINC COATING (GRAMS PER SQUAREMETER)
CLASS	TYPE		
1	1	3.2	550
	2	3.2	1,100
2	1	2.5	550
	2	2.5	1,100

2.2 MECHANICAL PROPERTIES OF RAIL

RAIL		MIN.ULTIMATE TENSILES STRENGTH (KG./MM.^{2})	MIN.PERCENTAGE OF ELONGATION	MAX. DEFLECTION			
				MAX. LOAD TRAFFIC FACE UP		MAX. LOAD TRAFFIC FACE DOWN	
CLASS	TYPE			KG.	DEFLECTION (MIN.)	KG.	DEFLECTION (MIN.)
1	1	41	21	910	50	720	50
	2	41	21	1,360	75	1,090	75
2	1	41	21	680	50	545	50
	2	41	21	910	75	720	75

   2.3 POST SHALL BE IN ACCORDANCE WITH TIS. 107.
   2.4 THE GALVANIZING OF BOLTS, NUTS, WASHERES AND SIMILAR THREADED FASTENERS SHALL BE IN ACCORDANCE WITH TIS. 171 CLASS 5.8.
   2.5 BLOCKOUT SHALL BE IN ACCORDANCE WITH TIS. 1228.
   2.6 STEEL PLATE SHALL BE IN ACCORDANCE WITH TIS. 1499 SM 400.
   2.7 ALL STEEL SHALL BE GALVANIZED ZINC COATING SHALL NOT BE LESS THAN 550 GRAMS PER SQUARE METER.
3. UNLESS OTHERWISE SPECIFIED, GUARDRAIL CLASS 1 SHALL BE USED FOR HIGHWAY CLASS D AND CLASS 1 FOR OTHER HIGHWAY CLASS, GUARDRAIL CLASS 2 SHALL BE USED.
4. IN CASE OF HIGH RESISTANCE TO CORROSION REQUIREMENT, GUARDRAIL TYPE 2 SHALL BE USED.
5. SPACING OF POSTS SHALL BE LOCATION AS FOLLOWS.

RADIUS OF CURVE R (M.)	SPACING OF POSTS S (M.)
ON TANGENT OR ≥ 700	2.00
450 ≤ R < 700	1.50
R < 450	1.00

*HEIGHT OF FILL H (M.)	SPACING OF POSTS S (M.)
H ≤ 300	2.00
3.00 < H ≤ 4.00	1.50
4.00 < H	1.00

* FOR SIDE SLOPE 2:1 OR STEEPER
FOR HORIZONTAL CURVE WITH HIGH FILL, THE MINIMUM SPACING VALUE OF THE ONE SHALL BE GOVERN.

6. IN GENERAL, GUARDRAIL IS MORE SUITABLE THAN GUIDE POST ON HORIZONTAL CURVE SECTION WITH HIGH FILL MORE THAN 5.00 M. (AND SIDE SLOPE IS STEEPER THAN 3:1) AND NOT RECOMMENDED FOR HIGH FILL OVER 7.00 M.
7. GUARDRAIL INSTALLED IN CURVE WHERE RADIUS IS LESS THAN 50 M. SHALL BE PRE-BENT FROM THE FACTORY.
8. BACKUP PLATE OF THE SAME CLASS AND TYPE AS THE RAIL WITH INTERMEDIATE POST SHALL BE PROVIDED WHERE SPACING OF POSTS IS 2S M.
9. UNLESS OTHERWISE SPECIFIED ON THIS DRAWING, GUARDRAIL SHALL BE IN ACCORDANCE WITH TIS. 248.
10. REFLECTIVE SHEETING SHALL CONFORM TO TIS. 606 TYPE 1. (COEFFICIENT OF RETRO-REFLECTION LEVEL 1)
11. W-BEAM GUARDRAIL INSTALLATION SEE DRAWING NO. RS-605 OR RS-606.

REMARK :

THE DOUBLE W-BEAM GUARDRAIL IS SUITABLE ONLY IN SPECIFIC LOCATIONS AND CERTAIN CONDITION. IN CASE OF SUFFICIENT OR HAZARD AREA, THE CONCRETE BARRIER SHOULD BE INSTALLED. IT SHOULD BE APPLIED WITH THE FIRM INFORMATION CONCERNED AND RECOMMENDED BY THE ENGINEER.

REV.	REVISION	SIGNATURE	DATE
REV.1	REVISION 1/2017		JUN 2017

KINGDOM OF THAILAND

MINISTRY OF TRANSPORT
DEPARTMENT OF HIGHWAYS

STANDARD DRAWING

GUARDRAIL
DOUBLE W-BEAM GUARDRAIL

DESIGNED : D.O.H. & CONSULTANTS	**CHECKED :** BUREAU OF LOCATION & DESIGN	**DATE :** OCT 2015
SUBMITTED : (DIRECTOR OF LOCATION & DESIGN BUREAU)		**SCALE :** AS SHOWN
APPROVED : (FOR DIRECTOR GENERAL)		**DWG NO.** RS-604
		SHEET NO. 77/RI

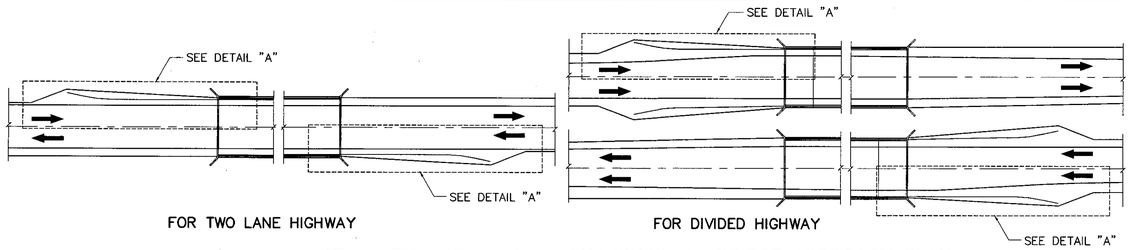

FOR TWO LANE HIGHWAY

FOR DIVIDED HIGHWAY

INSTALLATION OF W-BEAM GUARDRAIL AT BRIDGE APPROACH PLAN

SCALE 1 : 500

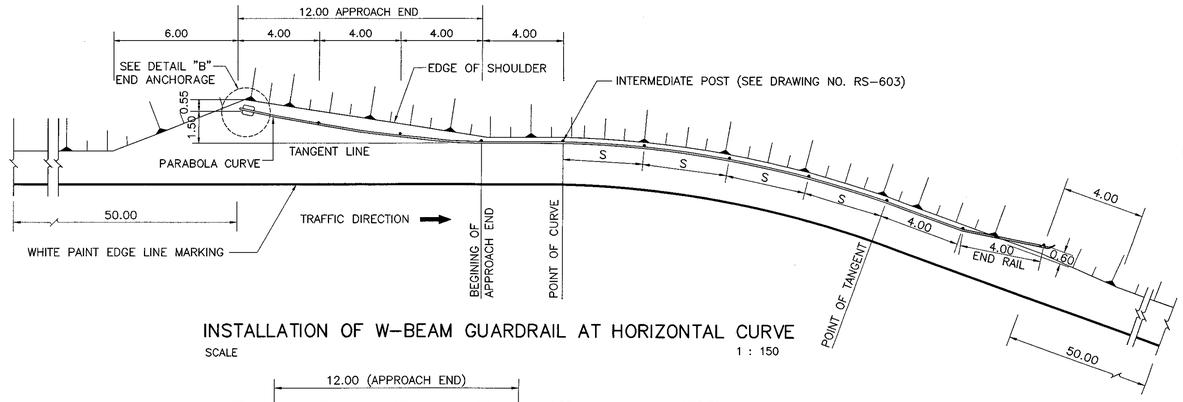

INSTALLATION OF W-BEAM GUARDRAIL AT HORIZONTAL CURVE

SCALE 1 : 150

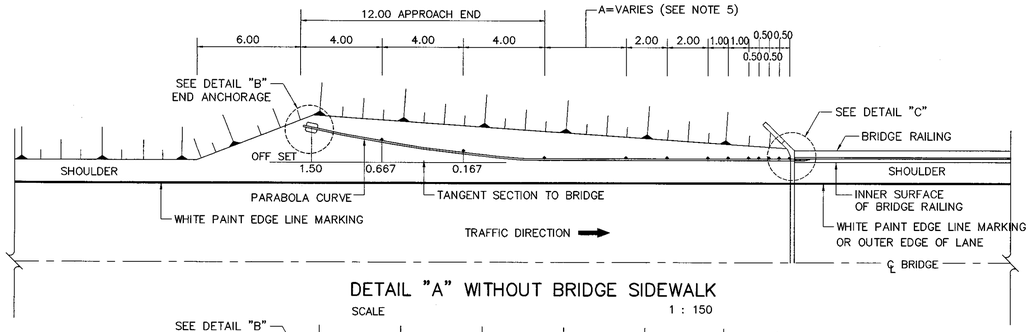

DETAIL "A" WITHOUT BRIDGE SIDEWALK

SCALE 1 : 150

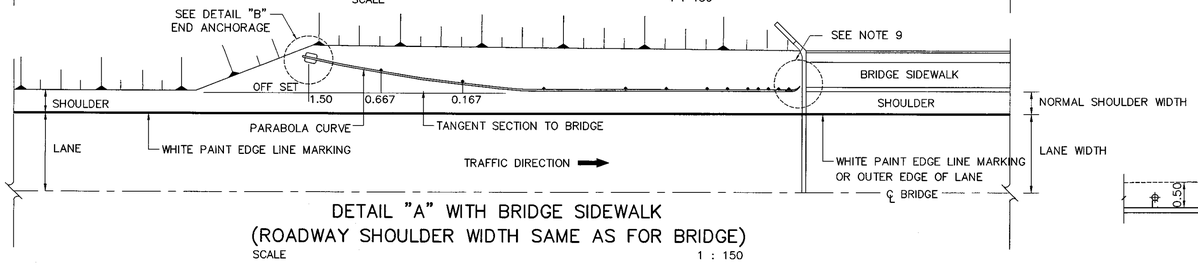

DETAIL "A" WITH BRIDGE SIDEWALK (ROADWAY SHOULDER WIDTH SAME AS FOR BRIDGE)

SCALE 1 : 150

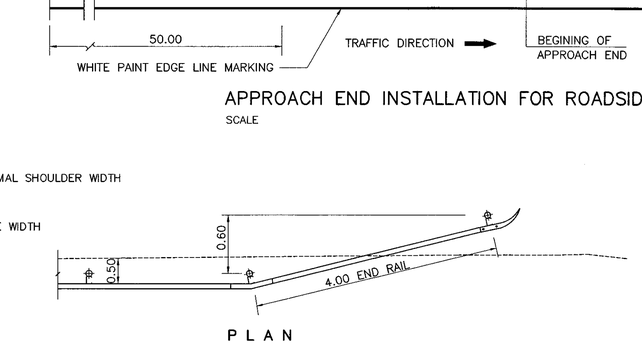

PLAN

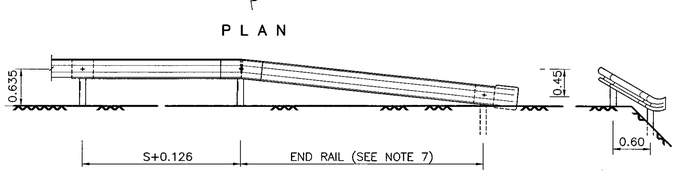

ELEVATION SIDE VIEW

END RAIL

SCALE 1 : 50

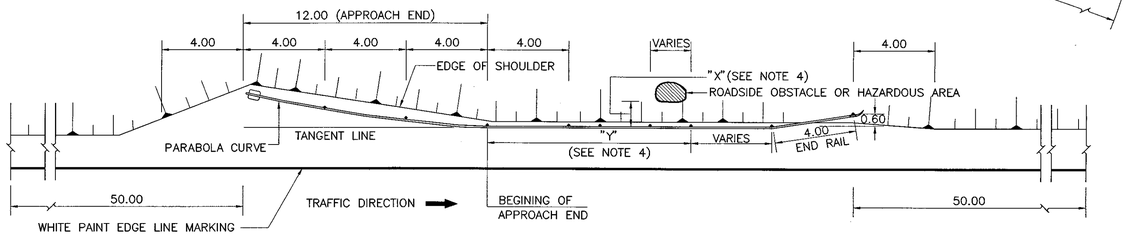

APPROACH END INSTALLATION FOR ROADSIDE OBSTACLE

SCALE 1 : 150

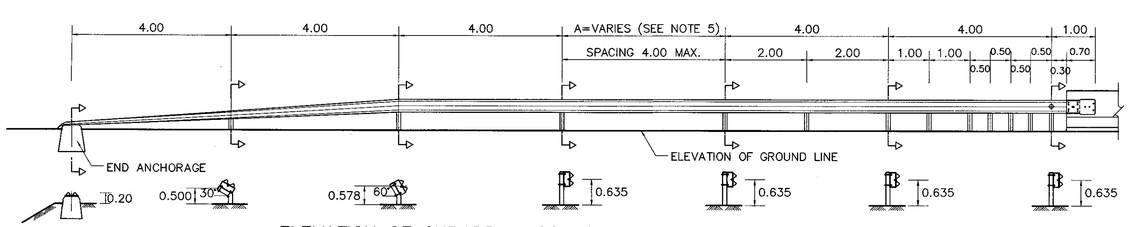

ELEVATION OF GURADRAIL CONNECTION TO BRIDGE RAILING

SCALE 1 : 75

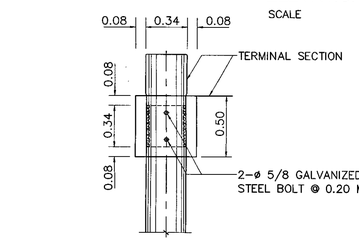

PLAN CONCRETE ANCHOR

SCALE 1 : 25

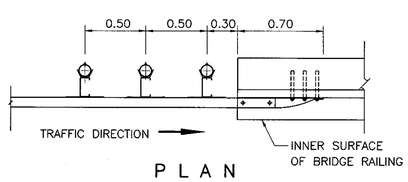

PLAN

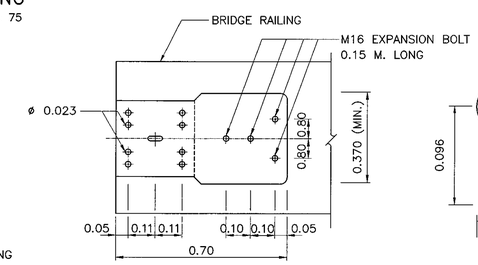

W-BEAM CONNECTION TO BRIDGE RAIL

NOT TO SCALE

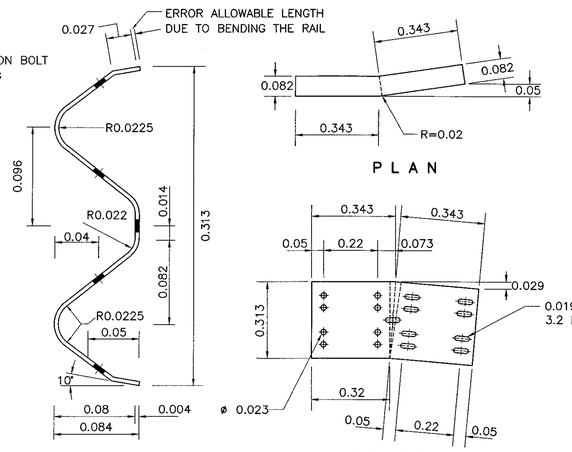

SPLICE SECTION

NOT TO SCALE

PLAN

ELEVATION

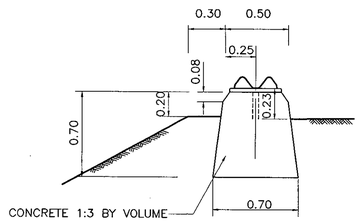

DETAIL "B"

SCALE 1 : 25

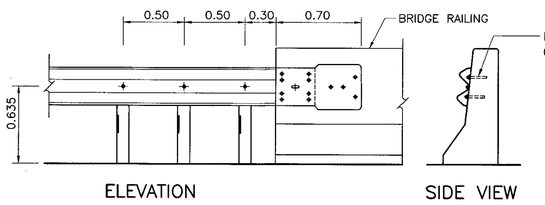

ELEVATION SIDE VIEW

DETAIL "C"

SCALE 1 : 25

NOTES :

1. ALL DIMENSIONS ARE IN METERS UNLESS OTHERWISE INDICATED.
2. PAYMENT SHALL BE MEASURED BY LINEAR METERS OF RAIL INCLUDING TERMINAL SECTION CONCRETE ANCHOR AND SPLICE SECTION.
3. OBSTACLE MEANS PERMANENT STRUCTURE WHICH MAY BE DANGEROUS TO VEHICLES STRIKING SUCH AS, ELECTRIC POLE, BRIDGE PIER, ETC.
4. SPACING "X" AND "Y" ARE AS FOLLOWS.
   4.1 "X" = 0.50 – 1.50 M. "Y" = 4.00 M. POST SPACING 2.00 M.
   4.2 "X" = 1.50 – 3.00 M. "Y" = 8.00 M. POST SPACING 2.00 M.
5. THE PORTION OF GUARDRAIL INDICATED BY "A" SHALL NOT APPLY IF EMBANKMENT HEIGHT IS LESS THAN 4.00 M. (SIDE SLOPE 1.5 : 1 MAX.)
6. THIS TYPE OF INSTALLATION SHALL BE FOR HIGHWAY CLASSIFICATIONS OF D AND 1 OR OTHERWISE INDICATED.
7. DIVIDED HIGHWAY DO NOT NEED END RAIL.
8. GUARDRAIL SHALL CONFORM TO TIS. 248.
9. THE PLAN SHALL SEE DETAIL "D" ON THE DRAWING NO. RS-606.
10. IN CASE OF ROADWAY SHOULDER IS WIDER THAN BRIDGE SHALL SEE THE DRAWING NO. RS-606.
11. MARKINGS SHALL BE IN ACCORDANCE WITH THE DEPARTMENT OF HIGHWAYS' TRAFFIC CONTROL DEVICE MANUAL, CONFORMING TO TIS. 542.

WARRANTING FEATURES FOR W-BEAM GUARDRAIL INSTALLATION

1. HEIGHT OF EMBANKMENT OF ROADWAY IS MORE THAN 5.00 M. (7.00 M. MAXIMUM) AND SIDE SLOPE IS STEEPER THAN 3:1.
2. STEEPNESS OF DOWNGRADE IS MORE THAN 6% AND HEIGHT OF EMBANKMENT IS MORE THAN 3.00 M.
3. DEPTH OF WATER AT TOE OF SLOPE IS MORE THAN 1.50 M.
4. HORIZONTAL CURVE WITH RADIUS OF CURVE LESS THAN 150 M.

KINGDOM OF THAILAND

MINISTRY OF TRANSPORT
DEPARTMENT OF HIGHWAYS

STANDARD DRAWING

GUARDRAIL
INSTALLATION AND W-BEAM GUARDRAIL APPROACH TYPE-I

DESIGNED : D.O.H. & CONSULTANTS	**CHECKED :** BUREAU OF LOCATION & DESIGN		**DATE :** OCT 2015
SUBMITTED : (DIRECTOR OF LOCATION & DESIGN BUREAU)			**SCALE :** AS SHOWN
APPROVED : (FOR DIRECTOR GENERAL)			**DWG NO.** RS-605
			SHEET NO. 78

REF.	REVISION	SIGNATURE	DATE

D:\std dwg 2015\RS-605(REV00)

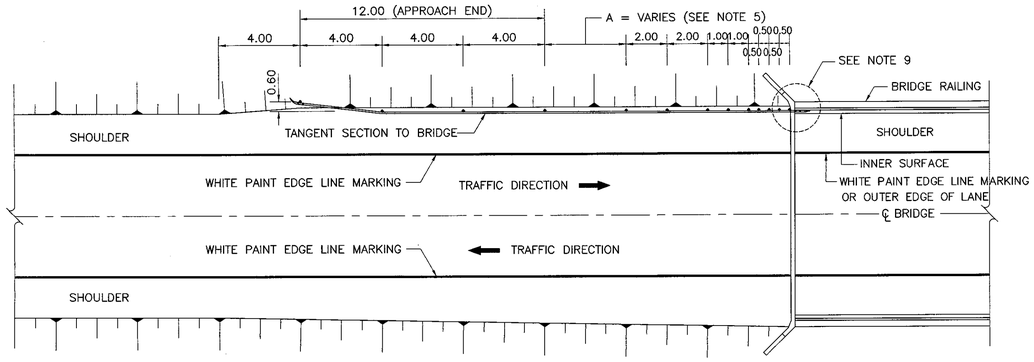

INSTALLATION OF W–BEAM GUARDRAIL AT BRIDGE APPROACH WITHOUT BRIDGE SIDEWALK

SCALE 1 : 150

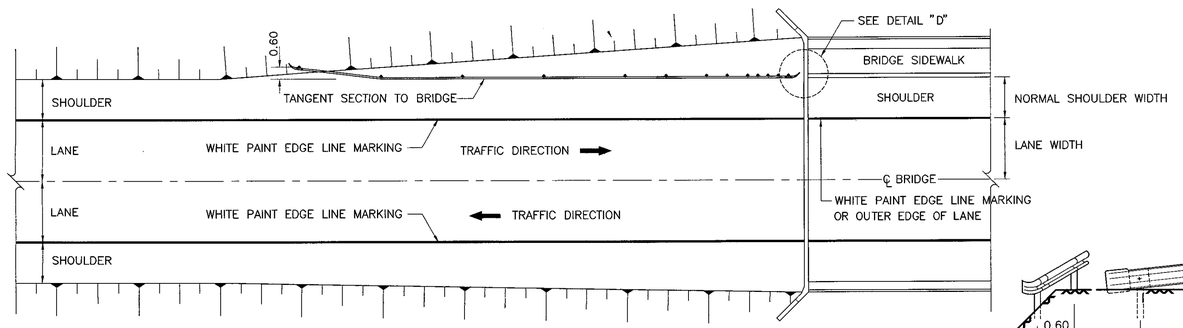

INSTALLATION OF W–BEAM GUARDRAIL AT BRIDGE APPROACH WITH BRIDGE SIDEWALK
(ROADWAY SHOULDER WIDTH SAME AS FOR BRIDGE)

SCALE 1 : 150

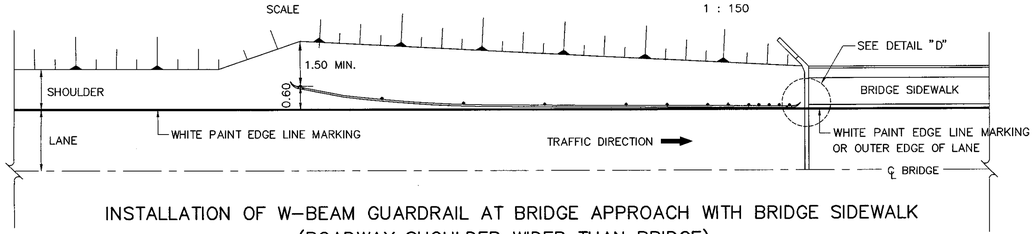

INSTALLATION OF W–BEAM GUARDRAIL AT BRIDGE APPROACH WITH BRIDGE SIDEWALK
(ROADWAY SHOULDER WIDER THAN BRIDGE)

SCALE 1 : 150

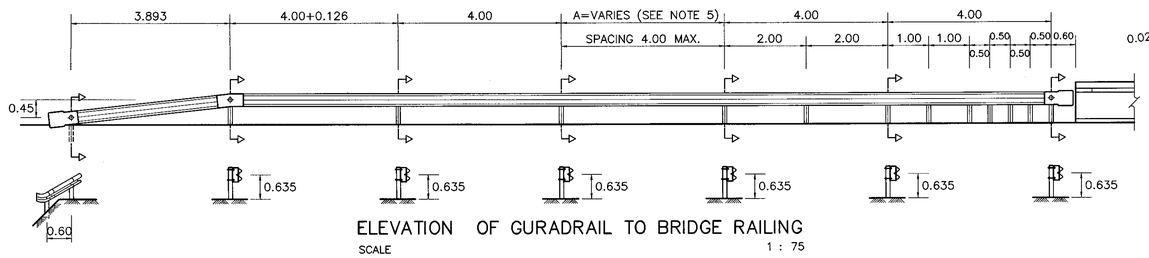

ELEVATION OF GURADRAIL TO BRIDGE RAILING

SCALE 1 : 75

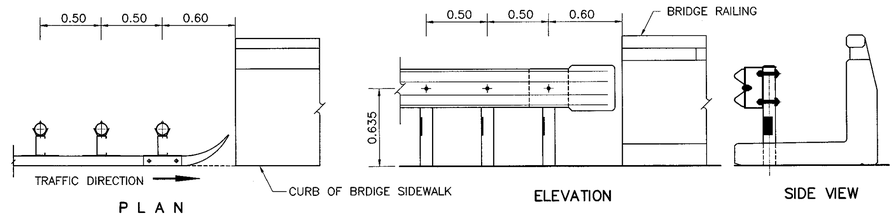

PLAN ELEVATION SIDE VIEW

DETAIL "D"

SCALE 1 : 25

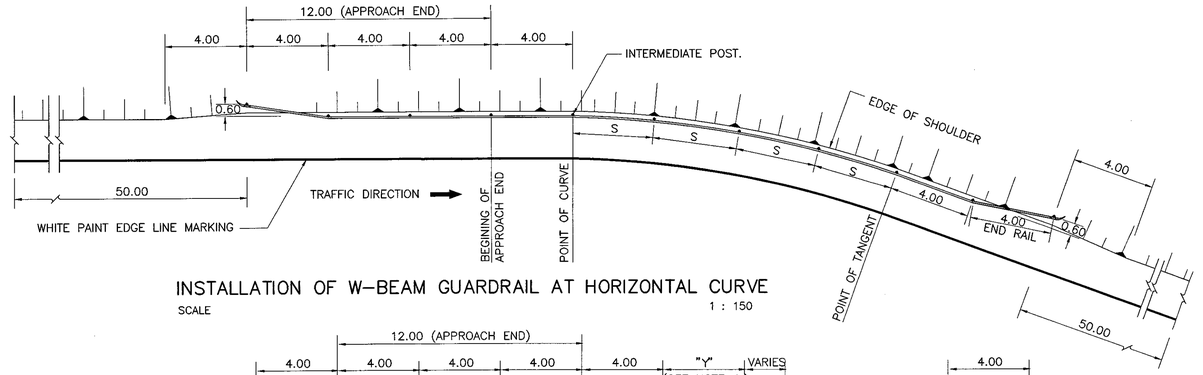

INSTALLATION OF W–BEAM GUARDRAIL AT HORIZONTAL CURVE

SCALE 1 : 150

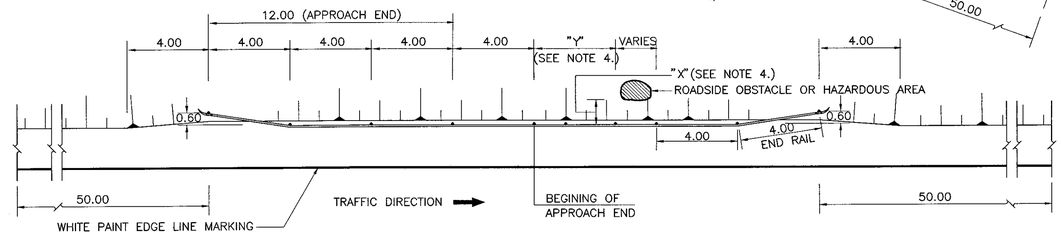

APPROACH END INSTALLATION FOR ROADSIDE OBSTACLE

SCALE 1 : 150

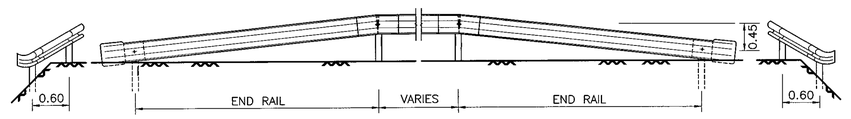

ELEVATION

SCALE 1 : 50

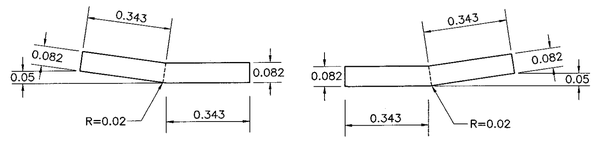

PLAN

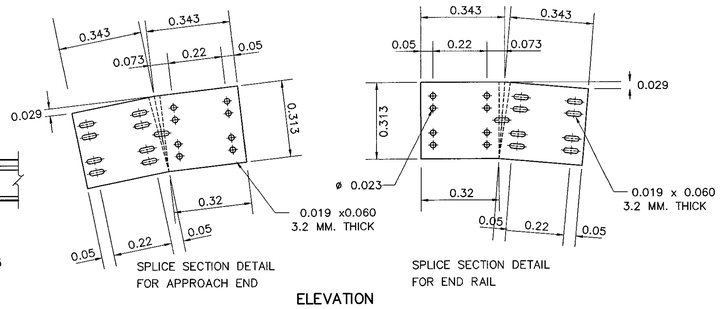

ELEVATION

SPLICE SECTION

NOT TO SCALE

NOTES ;

1. ALL DIMENSIONS ARE IN METERS UNLESS OTHERWISE INDICATED.
2. PAYMENT SHALL BE MEASURED BY LINEAR METERS OF RAIL INCLUDING TERMINAL SECTION CONCRETE ANCHOR AND SPLICE SECTION.
3. OBSTACLE MEANS PERMANENT STRUCTURE WHICH MAY BE DANGEROUS TO VEHICLES STRIKING SUCH AS, ELECTRIC POLE, BRIDGE PIER, ETC.
4. SPACING "X" AND "Y" ARE AS FOLLOWS.
   4.1 "X" = 0.50 – 1.50 M. "Y" = 4.00 M. POST SPACING 2.00 M.
   4.2 "X" = 1.50 – 3.00 M. "Y" = 8.00 M. POST SPACING 2.00 M.
5. THE PORTION OF GUARDRAIL INDICATED BY "A" SHALL NOT APPLY IF EMBANKMENT HEIGHT IS LESS THAN 4.00 M. (SIDE SLOPE 1.5 : 1 MAX.)
6. THIS TYPE OF INSTALLATION SHALL BE FOR HIGHWAY CLASSIFICATIONS OF 2, 3 AND 4.
7. GUARDRAIL SHALL CONFORM TO TIS. 248.
8. W–BEAM GUARDRAIL DETAILS AS SHOW ON THE DRAWING NO. RS–603.
9. THE DETAILS OF CONNECTION SEE DETAIL "C" ON THE DRAWING NO. RS–605.
10. MARKINGS SHALL BE IN ACCORDANCE WITH THE DEPARTMENT OF HIGHWAYS' TRAFFIC CONTROL DEVICE MANUAL, CONFORMING TO TIS. 542.

WARRANTING FEATURES FOR W–BEAM GUARDRAIL INSTALLATION

1. HEIGHT OF EMBANKMENT OF ROADWAY IS MORE THAN 5.00 M. (7.00 M. MAXIMUM) AND SIDE SLOPE IS STEEPER THAN 3:1.
2. STEEPNESS OF DOWNGRADE IS MORE THAN 6% AND HEIGHT OF EMBANKMENT IS MORE THAN 3.00 M.
3. DEPTH OF WATER AT TOE OF SLOPE IS MORE THAN 1.50 M.
4. HORIZONTAL CURVE WITH RADIUS OF CURVE LESS THAN 150 M.

KINGDOM OF THAILAND

MINISTRY OF TRANSPORT

DEPARTMENT OF HIGHWAYS

STANDARD DRAWING

GUARDRAIL

INSTALLATION AND W–BEAM GUARDRAIL APPROACH TYPE–II

DESIGNED : D.O.H. & CONSULTANTS	CHECKED : BUREAU OF LOCATION & DESIGN	DATE : OCT 2015
SUBMITTED : (DIRECTOR OF LOCATION & DESIGN BUREAU)		SCALE : AS SHOWN
APPROVED : (FOR DIRECTOR GENERAL)		DWG NO. RS–606
		SHEET NO. 79

REF.	REVISION	SIGNATURE	DATE

D:\std dwg 2015\RS-606(REV00)

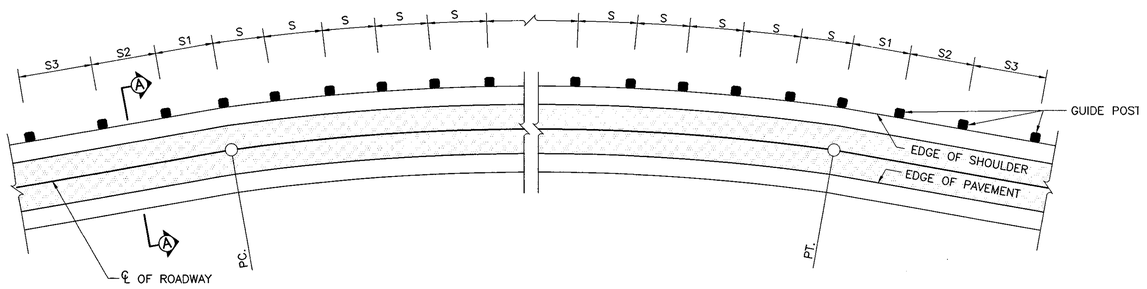

PLAN
NOT TO SCALE

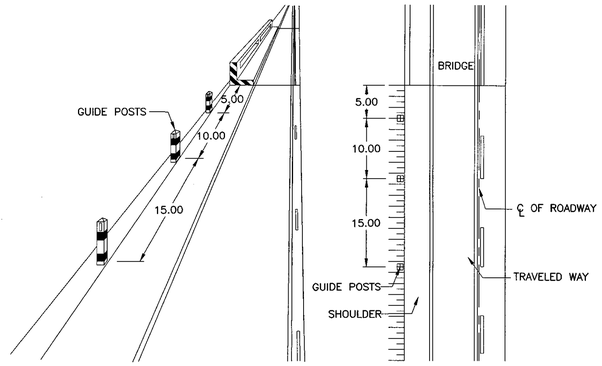

GUIDE POST INSTALLATION AT BRIDGE APPROACH
NOT TO SCALE

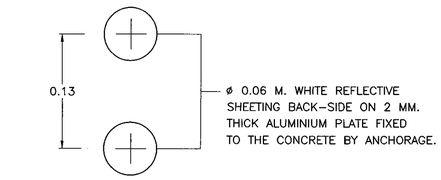

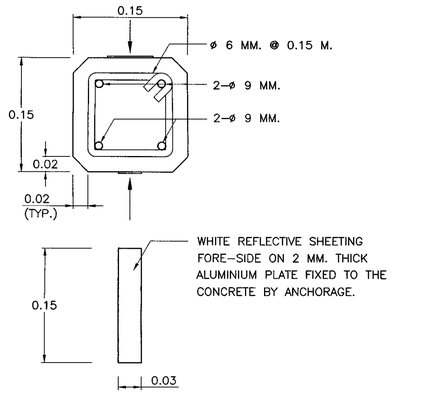

SECTION B – B CONCRETE TYPE
SCALE 1 : 4

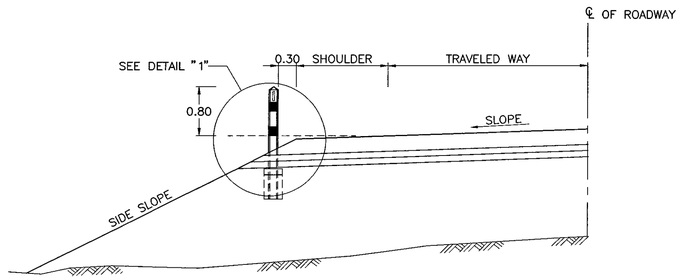

SECTION A – A CONCRETE TYPE
NOT TO SCALE

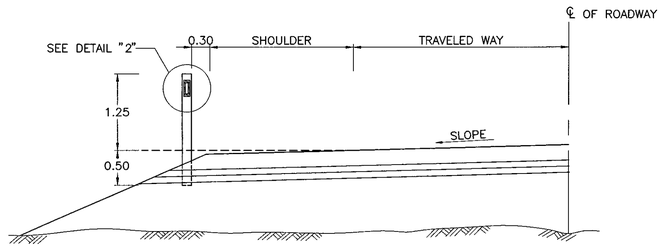

SECTION A – A FLEXIBLE TYPE
NOT TO SCALE

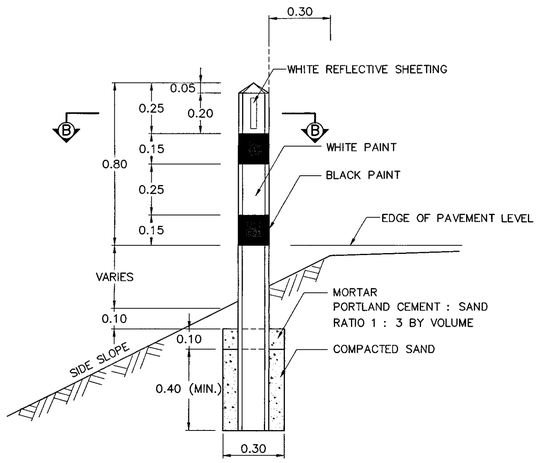

DETAIL "1"
SCALE 1 : 15

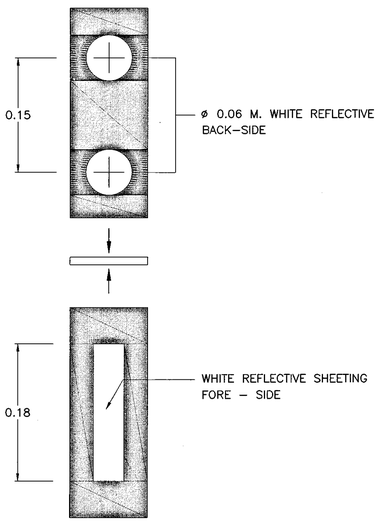

DETAIL "2"
SCALE 1 : 4

(EXAMPLE OF FLEXIBLE TYPE OF GUIDE POST)

TABLE SPACING OF GUIDE POST

RADIUS OF CURVE (METER)	SPACING OF GUIDE POST (METER)			
	S	S1	S2	S3
15	6	12	18	36
75	13	26	39	78
100	16	32	48	90
150	20	40	60	90
200	23	46	69	90
300	29	58	87	90
400	33	66	90	90
500	37	74	90	90

NOTES :

1. ALL DIMENSIONS ARE IN METERS UNLESS OTHERWISE INDICATED.
2. CONCRETE SHALL HAVE A MINIMUM ULTIMATE COMPRESSIVE STRENGTH OF 20 Mpa. (204 KSC.) FOR 15 x 15 x 15 CM. CUBE AT 28 DAYS, CEMENT SHALL CONFORM TO TIS. 15 TYPE I PORTLAND CEMENT OR APPROVAL TYPE.
3. REFLECTIVE SHEETING SHALL CONFORM TIS. 606 TYPE 9. (COEFFICIENT OF RETRO–REFLECTION LEVEL 9)
4. BLACK AND WHITE PAINTS SHALL CONFORM TO TIS. 327 AND SHALL BE APPLIED ON ALL FACES IN TWO LAYERS.
5. POST SHALL BE ERECTED TRULY VERTICAL.
6. REINFORCING STEEL SHALL CONFORM TO TIS. 20 GRADE SR. 24.
7. FLEXIBLE GUIDE POST MUST BE PRODUCED FROM ELASTICITY PLASTIC, THE PROPERTY OF MATERIALS ARE ABLE TO REVERT TO ORIGINAL FORM AFTER CRASHED AND ABLE TO HIGH RESIST TO IMPACTION AND HEAT. THERE ARE UNDER APPROVAL OF THE ENGINEER.
8. FOR GUIDE POST INSTALLATION AT SIDEWALK OR RAISED MEDIAN THE LATERAL OFFSET TO EDGE OF GUIDE POST IS APPROXIMATE 0.60 METERS FROM FACE OF CURB.
9. GUIDE POST SHALL BE INSTALLED AT BRIDGE APPROACH WHEN GUARDRAIL NOT ABLE TO INSTALL ONLY.

GUIDE POST SELECTION

1. FLEXIBLE GUIDE POST IS SUITABLE INSTALLATION AT NARROW CURVE, NARROW SHOULDER, VARIATION OF ROADWAY WIDTH AND SO ON.
2. CONCRETE GUIDE POST IS SUITABLE INSTALLATION AT ROADSIDE HAZARD SUCH AS DITCH, SWAMP, END OF CULVERT AND SO ON.

REF.	REVISION	SIGNATURE	DATE

KINGDOM OF THAILAND
MINISTRY OF TRANSPORT
DEPARTMENT OF HIGHWAYS

STANDARD DRAWING

GUIDE POST

DESIGNED : D.O.H. & CONSULTANTS	**CHECKED :** BUREAU OF LOCATION & DESIGN	**DATE :** OCT 2015
SUBMITTED :	(DIRECTOR OF LOCATION & DESIGN BUREAU)	**SCALE :** AS SHOWN
		DWG NO. RS–607
APPROVED :	(FOR DIRECTOR GENERAL)	**SHEET NO.** 80

D:\Std dwg 2015\RS-607(Feb-v00)

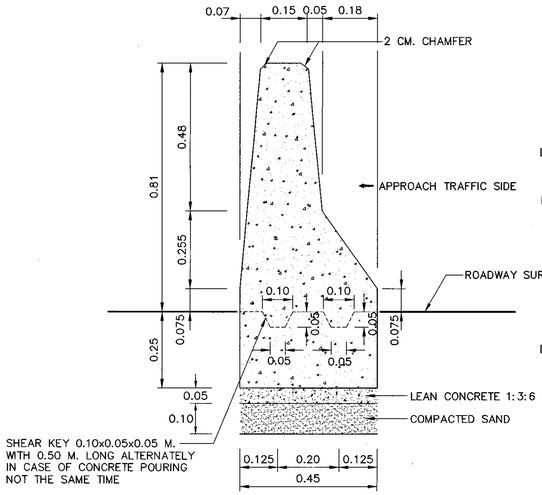

FRONT ELEVATION OF CONCRETE BARRIER TYPE I
SCALE 1 : 10

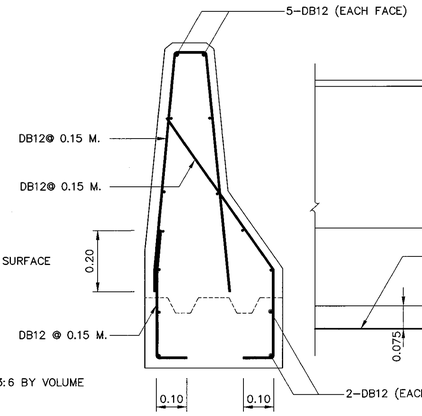

CONCRETE BARRIER TYPE I
REINFORCEMENT DETAIL
SCALE 1 : 10

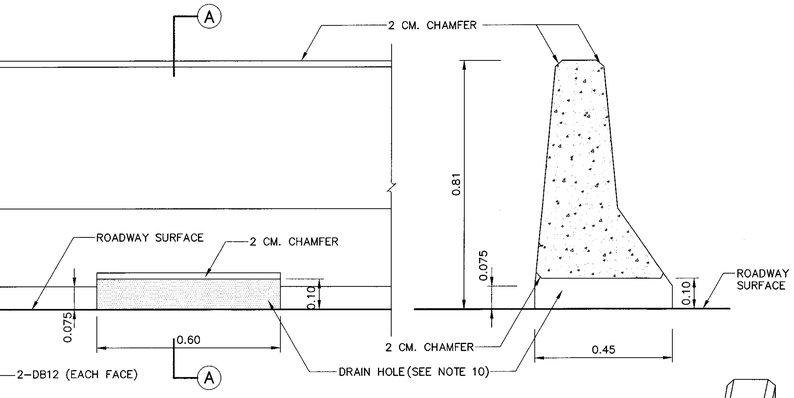

SIDE ELEVATION OF CONCRETE BARRIER TYPE I
SCALE 1 : 10

SECTION (A) – (A)
SCALE 1 : 10

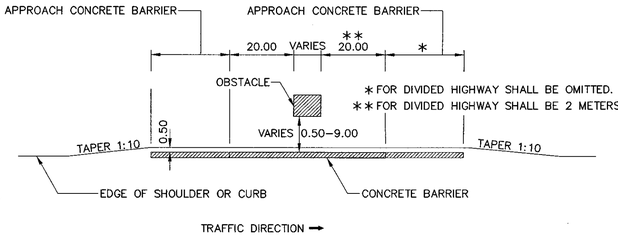

INSTALLATION OF CONCRETE BARRIER AT OBSTACLE
NOT TO SCALE

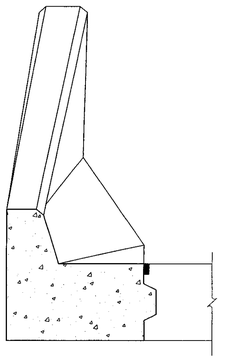

FRONT ELEVATION OF APPROACH CONCRETE BARRIER TYPE (A)
SCALE 1 : 10

NOTES :

1. ALL DIMENSION ARE IN METERS UNLESS OTHERWISE INDICATED.
2. CONCRETE SHALL HAVE A MINIMUM ULTIMATE COMPRESSIVE STRENGTH OF 30 MPa. (306 KSC.) FOR 15x15x15 CM. CUBE AT 28 DAYS, CEMENT SHALL CONFORM TO TIS. 15 TYPE I PORTLAND CEMENT OR APPROVAL TYPE.
3. REINFORCING STEEL SHALL CONFORM TO TIS. 20 GRADE SR. 24 FOR ROUND BARS AND TIS. 24 GRADE SD 40 FOR DEFORMED BARS.
4. CLEAR CONCRETE COVER SHALL BE 5 CM.
5. REINFORCING AND OTHER DETAILS OF APPROACH CONCRETE BARRIER SHALL BE THE SAME AS CONCRETE BARRIER.
6. CONSTRUCTION JOINT SHALL BE PROVIDED AT 10.00 M. INTERVAL.
7. EXPANSION JOINT WITH NON–EXTRUDING JOINT FILLER SHALL BE PROVIDED AT 60.00 M. INTERVAL.
8. APPROACH CONCRETE BARRIER SHALL BE PAINTED IN BLACK AND WHITE STRIPE 0.50 M. WIDE, IN TWO COATS. THE PAINT SHALL CONFORM TO TIS. 327.
9. PRECAST CONCRETE BARRIER TYPE IA AND TYPE IB ACCORDING TO DRAWING NO. RS–611 AND NO. RS–612 RESPECTIVELY, SHALL BE USED INSTEAD OF CAST–IN–SITU CONCRETE BARRIER.
10. IF NECESSARY TO DRAINAGE, THE DRAIN HOLES SHALL BE APPLIED WITH 10.00 M. SPACING OR OTHER SPACING AS DIRECTED BY THE ENGINEER.

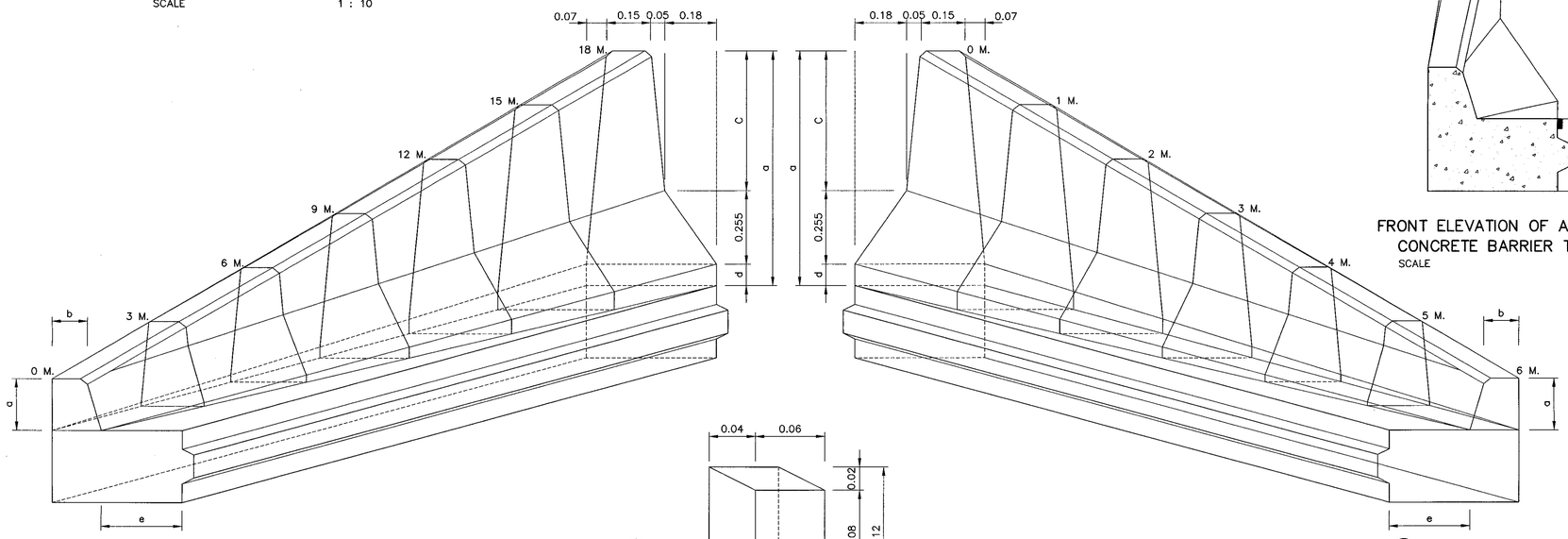

ISOMETRIC DIAGRAM OF APPROACH CONCRETE BARRIER TYPE (A)
NOT TO SCALE

ISOMETRIC DIAGRAM OF END CONCRETE BARRIER TYPE (A)
NOT TO SCALE

TABLE OF DIMENSIONS FOR APPROACH CONCRETE BARRIER TYPE A

TRANSITION DISTANCE (M.)	DIMENSION (M.)				
	a	b	c	d	e
0	0.20	0.15	0.00	0.00	0.30
3	0.30	0.15	0.09	0.01	0.25
6	0.40	0.15	0.16	0.03	0.20
9	0.51	0.15	0.24	0.04	0.15
12	0.61	0.15	0.32	0.05	0.10
15	0.71	0.15	0.40	0.06	0.05
18	0.81	0.15	0.48	0.075	0.00

END CONCRETE BARRIER TYPE A

TRANSITION DISTANCE (M.)	DIMENSION (M.)				
	a	b	c	d	e
0	0.81	0.15	0.48	0.075	0.00
1	0.71	0.15	0.40	0.06	0.05
2	0.61	0.15	0.32	0.05	0.10
3	0.51	0.15	0.24	0.04	0.15
4	0.40	0.15	0.16	0.03	0.20
5	0.30	0.15	0.09	0.01	0.25
6	0.20	0.15	0.00	0.00	0.30

REMARK :

THIS BARRIER IS SUITABLE ONLY IN SPECIFIC LOCATIONS AND CERTAIN CONDITIONS, IT SHOULD BE APPLIED WITH THE FIRM INFORMATIONS CONCERNED AND RECOMMENDED BY THE ENGINEER.

SHEAR KEY DETAIL
SCALE 1 : 2.5

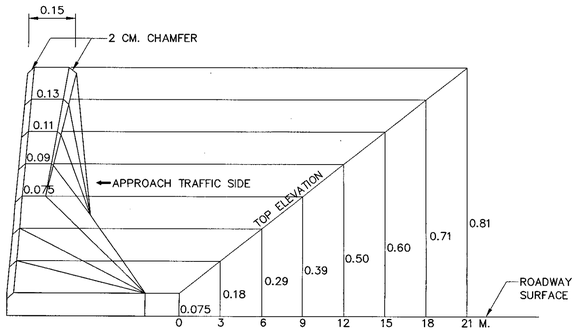

APPROACH CONCRETE BARRIER TYPE (B)
SCALE 1 : 10

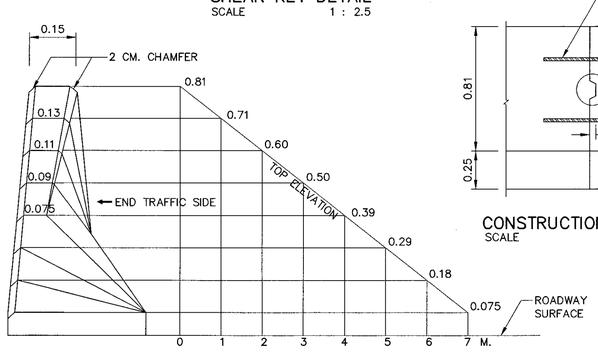

END CONCRETE BARRIER TYPE (B)
SCALE 1 : 10

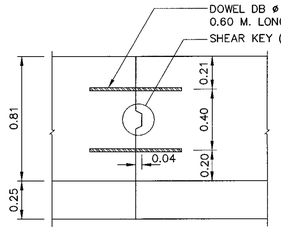

CONSTRUCTION JOINT DETAIL
SCALE 1 : 20

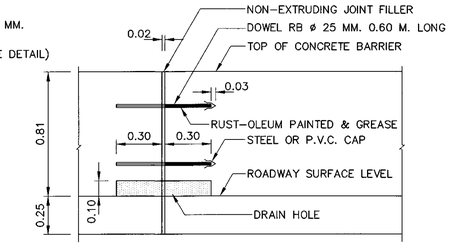

EXPANSION JOINT DETAIL
SCALE 1 : 20

KINGDOM OF THAILAND

MINISTRY OF TRANSPORT
DEPARTMENT OF HIGHWAYS

STANDARD DRAWING

CONCRETE BARRIER
TYPE I

DESIGNED : D.O.H. & CONSULTANTS	**CHECKED :** BUREAU OF LOCATION & DESIGN	**DATE :** OCT 2015	
SUBMITTED : (DIRECTOR OF LOCATION & DESIGN BUREAU)		**SCALE :** AS SHOWN	
APPROVED : (FOR DIRECTOR GENERAL)		**DWG NO.** RS–608	
		SHEET NO. 81	

REF.	REVISION	SIGNATURE	DATE

D:\std dwg 2015\RS-608(REV00)

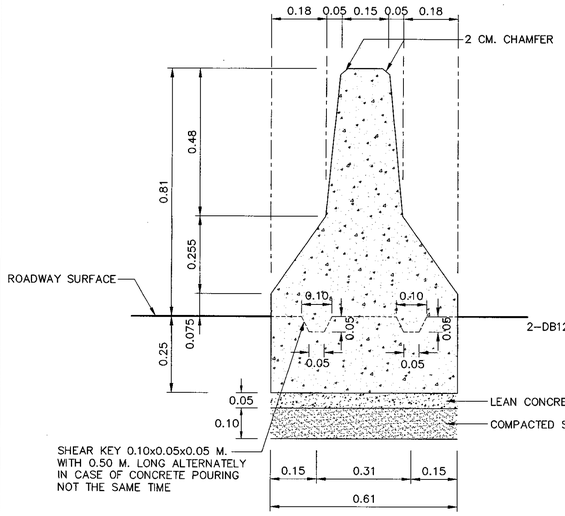

FRONT ELEVATION OF
CONCRETE BARRIER TYPE II
SCALE 1 : 10

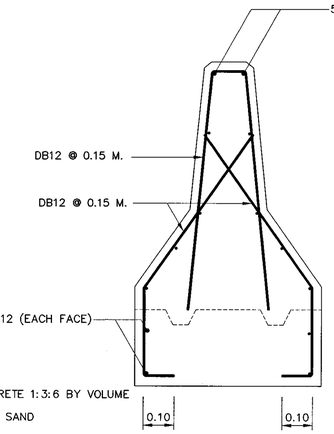

CONCRETE BARRIER TYPE II
REINFORCEMENT DETAIL
SCALE 1 : 10

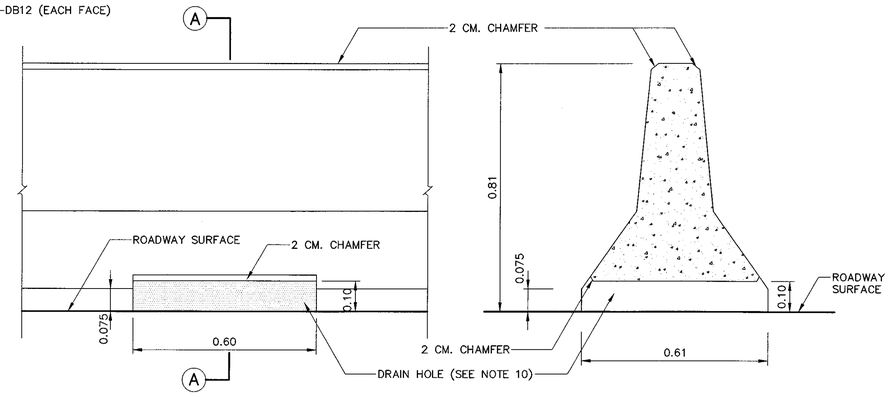

SIDE ELEVATION OF CONCRETE BARRIER TYPE II
SCALE 1 : 10

SECTION (A) – (A)
SCALE 1 : 10

NOTES :

1. ALL DIMENSION ARE IN METERS UNLESS OTHERWISE INDICATED.
2. CONCRETE SHALL HAVE A MINIMUM ULTIMATE COMPRESSIVE STRENGTH OF 30 MPa. (306 KSC.) FOR 15x15x15 CM. CUBE AT 28 DAYS, CEMENT SHALL CONFORM TO TIS. 15 TYPE I PORTLAND CEMENT OR APPROVAL TYPE.
3. REINFORCING STEEL SHALL CONFORM TO TIS. 20 GRADE SR. 24 FOR ROUND BARS AND TIS. 24 GRADE SD 40 FOR DEFORMED BARS.
4. CLEAR CONCRETE COVER SHALL BE 5 CM.
5. REINFORCING AND OTHER DETAILS OF APPROACH CONCRETE BARRIER SHALL BE THE SAME AS CONCRETE BARRIER.
6. CONSTRUCTION JOINT SHALL BE PROVIDED AT 10.00 M. INTERVAL.
7. EXPANSION JOINT WITH NON-EXTRUDING JOINT FILLER SHALL BE PROVIDED AT 60.00 M. INTERVAL.
8. APPROACH CONCRETE BARRIER SHALL BE PAINTED IN BLACK AND WHITE STRIPE 0.50 M. WIDE, IN TWO COATS. THE PAINT SHALL CONFORM TO TIS. 327.
9. PRECAST CONCRETE BARRIER TYPE IIA AND TYPE IIB ACCORDING TO DRAWING NO. RS-613 AND NO. RS-614 RESPECTIVELY, SHALL BE USED INSTEAD OF CAST-IN-SITU CONCRETE BARRIER.
10. IF NECESSARY TO DRAINAGE, THE DRAIN HOLES SHALL BE APPLIED WITH 10.00 M. SPACING OR OTHER SPACING AS DIRECTED BY THE ENGINEER.

TABLE OF DIMENSIONS FOR
APPROACH AND END CONCRETE BARRIER TYPE D

TRANSITION DISTANCE (M.)	DIMENSION (M.)				
	a	b	c	d	e
0	0.20	0.15	0.00	0.00	0.30
3	0.30	0.15	0.09	0.01	0.25
6	0.40	0.15	0.16	0.03	0.20
9	0.51	0.15	0.24	0.04	0.15
12	0.61	0.15	0.32	0.05	0.10
15	0.71	0.15	0.40	0.06	0.05
18	0.81	0.15	0.48	0.075	0.00

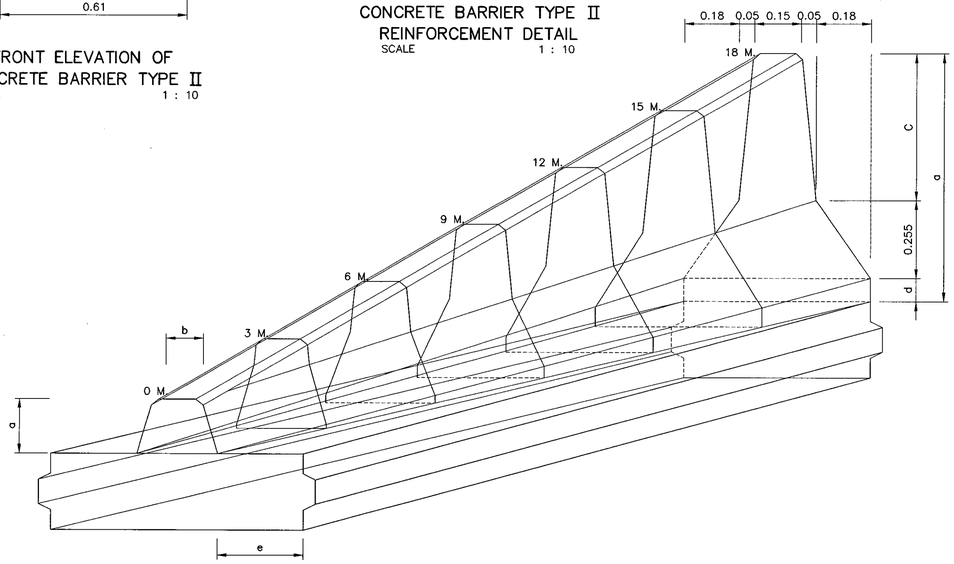

ISOMETRIC DIAGRAM OF APPROACH AND END CONCRETE BARRIER TYPE (C)
NOT TO SCALE

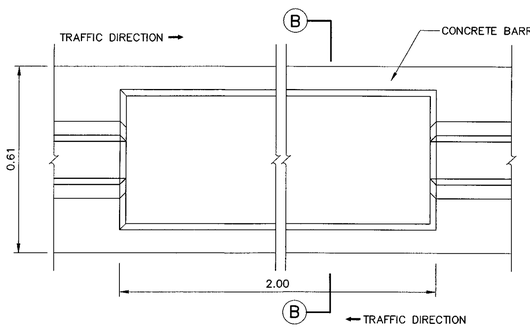

PLAN OF CONCRETE BARRIER OPEN FOR
PEDESTRAIN CROSS WALK
SCALE 1 : 10

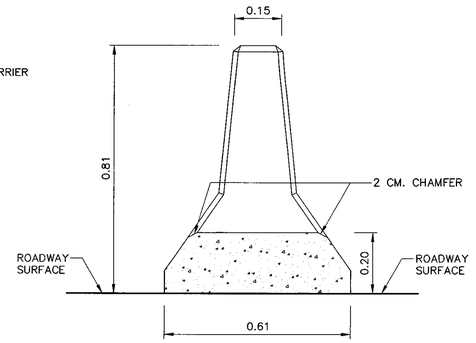

SECTION (B) – (B)
SCALE 1 : 10

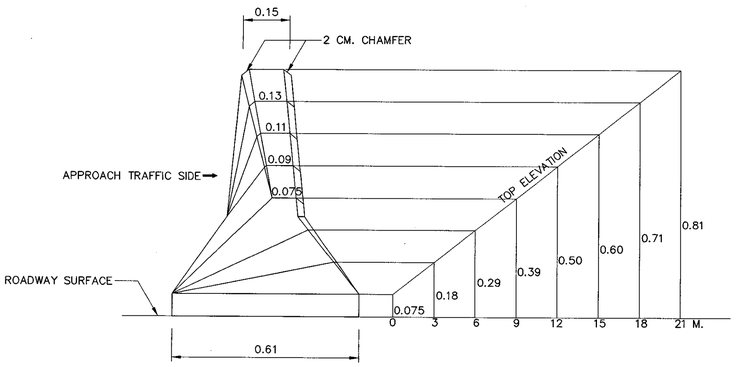

APPROACH AND END CONCRETE BARRIER TYPE (D)
SCALE 1 : 10

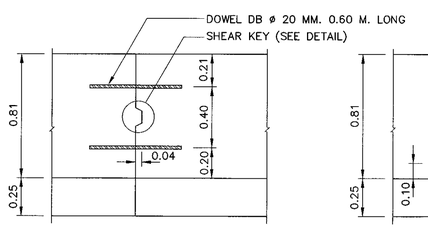

CONSTRUCTION JOINT DETAIL
SCALE 1 : 20

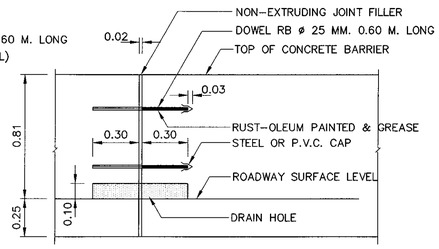

EXPANSION JOINT DETAIL
SCALE 1 : 20

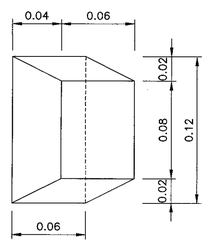

SHEAR KEY DETAIL
SCALE 1 : 2.5

REMARK :
THIS BARRIER IS SUITABLE ONLY IN SPECIFIC LOCATIONS AND CERTAIN CONDITIONS, IT SHOULD BE APPLIED WITH THE FIRM INFORMATIONS CONCERNED AND RECOMMENDED BY THE ENGINEER.

REF.	REVISION	SIGNATURE	DATE

KINGDOM OF THAILAND
MINISTRY OF TRANSPORT
DEPARTMENT OF HIGHWAYS

STANDARD DRAWING

CONCRETE BARRIER
TYPE II

DESIGNED : D.O.H. & CONSULTANTS	CHECKED : BUREAU OF LOCATION & DESIGN	DATE : OCT 2015
SUBMITTED : (DIRECTOR OF LOCATION & DESIGN BUREAU)		SCALE : AS SHOWN
APPROVED : (FOR DIRECTOR GENERAL)		DWG NO. RS-609
		SHEET NO. 82

D:\std dwg 2015\RS-609(REV00)

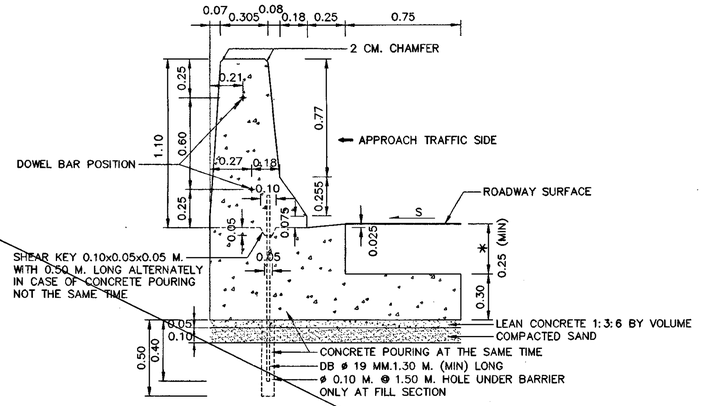

* IN CASE OF CONCRETE PAVEMENT 23 CM. THICKNESS. SPECIFY HIGHNESS TO BE 23 CM.

FRONT ELEVATION OF
CONCRETE BARRIER TYPE III
SCALE 1 : 20

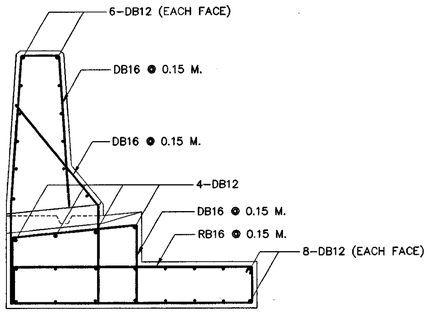

CONCRETE BARRIER TYPE III
REINFORCEMENT DETAIL
SCALE 1 : 20

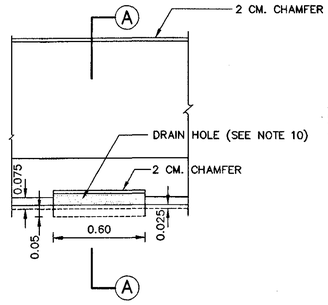

SIDE ELEVATION OF
CONCRETE BARRIER TYPE III
SCALE 1 : 20

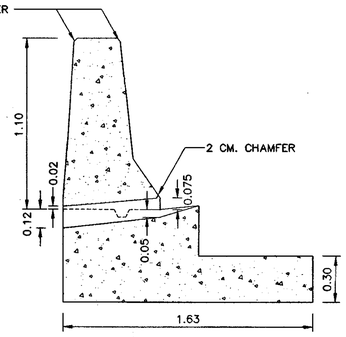

SECTION Ⓐ – Ⓐ
SCALE 1 : 20

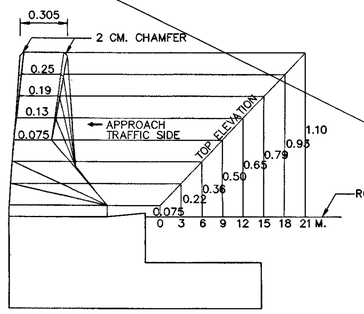

APPROACH CONCRETE BARRIER TYPE E
SCALE 1 : 20

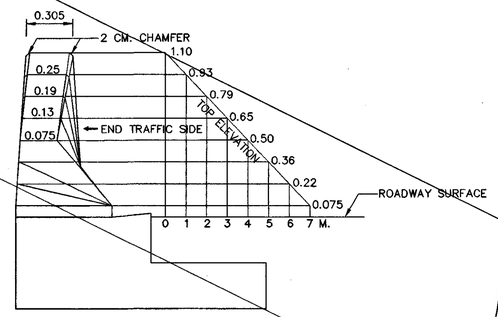

END CONCRETE BARRIER TYPE E
SCALE 1 : 20

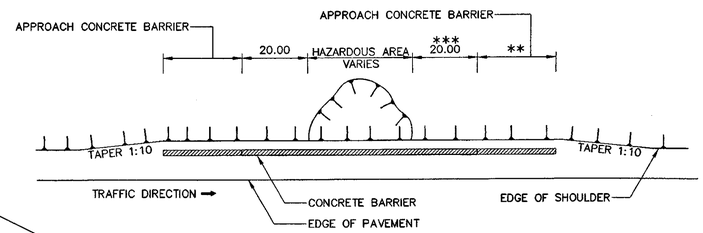

** FOR DIVIDED HIGHWAY SHALL BE OMITTED.
*** FOR DIVIDED HIGHWAY SHALL BE 2 METERS.

INSTALLATION OF CONCRETE BARRIER
NOT TO SCALE

NOTES :

1. ALL DIMENSION ARE IN METERS UNLESS OTHERWISE INDICATED.
2. CONCRETE SHALL HAVE A MINIMUM ULTIMATE COMPRESSIVE STRENGTH OF 30 MPa. (306 KSC.) FOR 15x15x15 CM. CUBE AT 28 DAYS, CEMENT SHALL CONFORM TO TIS. 15 TYPE I PORTLAND CEMENT OR APPROVAL TYPE.
3. REINFORCING STEEL SHALL CONFORM TO TIS. 20 GRADE SR. 24 FOR ROUND BARS AND TIS. 24 GRADE SD 40 FOR DEFORMED BARS.
4. CLEAR CONCRETE COVER SHALL BE 5 CM.
5. REINFORCING AND OTHER DETAILS OF APPROACH CONCRETE BARRIER SHALL BE THE SAME AS CONCRETE BARRIER.
6. CONSTRUCTION JOINT SHALL BE PROVIDED AT 10.00 M. INTERVAL.
7. EXPANSION JOINT WITH NON-EXTRUDING JOINT FILLER SHALL BE PROVIDED AT 60.00 M. INTERVAL AND/OR DRAIN CHUTE POSITION.
8. OUTLET OF CONCRETE BARRIER AT OUTER EDGE SHALL NOT BE CONSTRUCTED WHERE SHOULDER SLOPES TOWARD INNER EDGE AND EXPANSION JOINT SHALL BE PROVIDED NOT MORE THAN 30.00 M. INTERVAL.
9. APPROACH CONCRETE BARRIER SHALL BE PAINTED IN BLACK AND WHITE STRIPE 0.50 M. WIDE, IN TWO COATS. THE PAINT SHALL CONFORM TO TIS. 327.
10. IF NECESSARY TO DRAINAGE THE DRAIN HOLES SHALL BE APPLIED WITH 10.00 M. SPACING. MOREOVER, SPACING MAYBE ADJUSTED AS DIRECTED BY THE ENGINEER.

REMARK :

THIS BARRIER IS SUITABLE ONLY IN SPECIFIC LOCATIONS AND CERTAIN CONDITIONS, IT SHOULD BE APPLIED WITH THE FIRM INFORMATIONS CONCERNED AND RECOMMENDED BY THE ENGINEER.

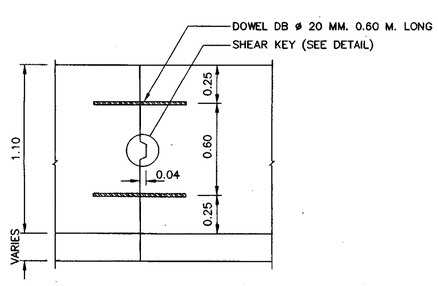

CONSTRUCTION JOINT DETAIL
SCALE 1 : 20

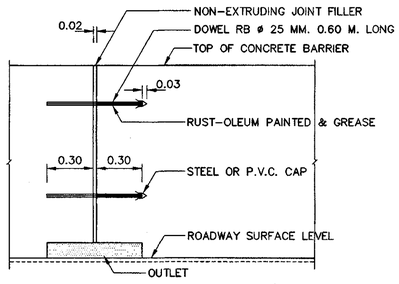

EXPANSION JOINT DETAIL
SCALE 1 : 20

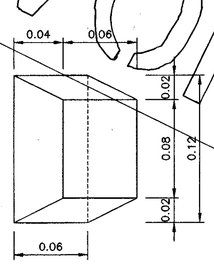

SHEAR KEY DETAIL
SCALE 1 : 2.5

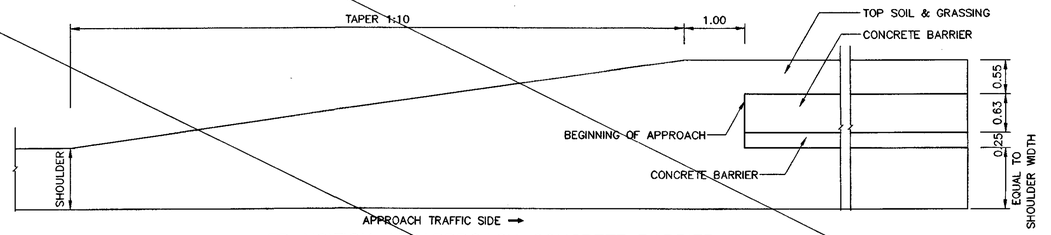

TRANSITION AT APPROACH CONCRETE BARRIER
SCALE 1 : 50

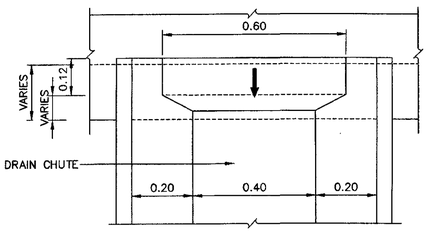

DETAIL OF OUTLET WITH DRAIN CHUTE
SCALE 1 : 10

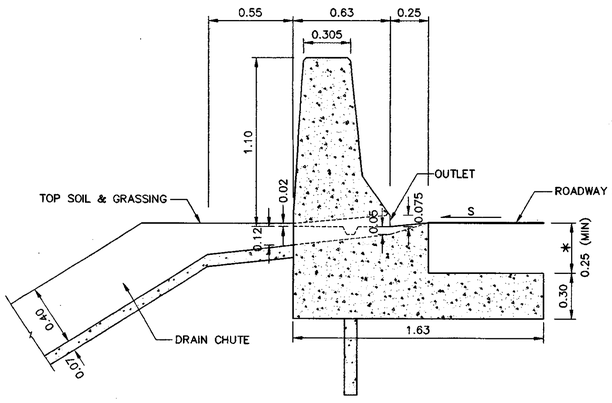

CONCRETE BARRIER TYPE III AT HIGH FILL SECTION
SCALE 1 : 20

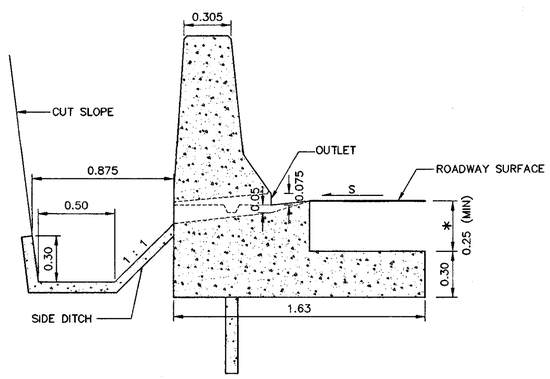

CONCRETE BARRIER TYPE III AT DEEP CUT SECTION
SCALE 1 : 20

VOID

REF.	REVISION	SIGNATURE	DATE

KINGDOM OF THAILAND

MINISTRY OF TRANSPORT
DEPARTMENT OF HIGHWAYS

STANDARD DRAWING

CONCRETE BARRIER
TYPE III : FOR DEEP CUT AND HIGH FILL

DESIGNED : D.O.H. & CONSULTANTS	CHECKED : BUREAU OF LOCATION & DESIGN	DATE : OCT 2015
SUBMITTED : (DIRECTOR OF LOCATION & DESIGN BUREAU)		SCALE : AS SHOWN
APPROVED : (FOR DIRECTOR GENERAL)		DWG NO. RS-610
		SHEET NO. 83

D:\std dwg 2015\RS-610(REV00)

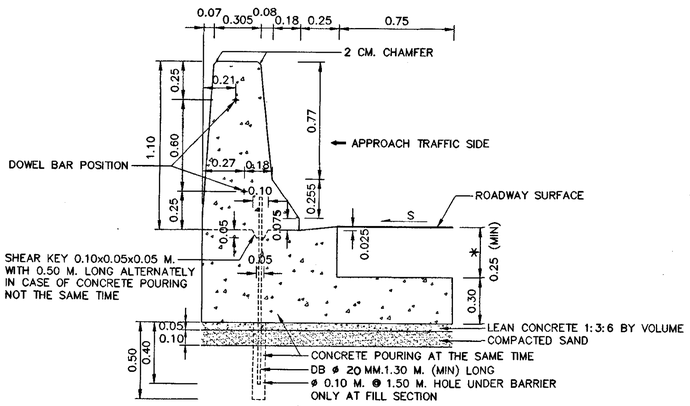

* IN CASE OF CONCRETE PAVEMENT 23 CM. THCKNESS. SPECIFY HIGHNESS TO BE 23 CM.

FRONT ELEVATION OF
CONCRETE BARRIER TYPE III
SCALE 1 : 20

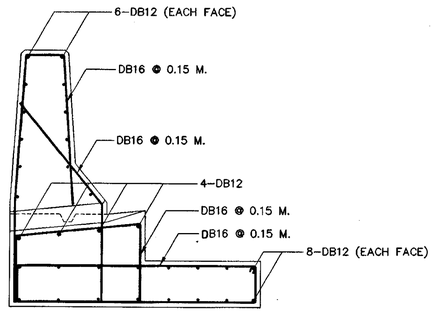

CONCRETE BARRIER TYPE III
REINFORCEMENT DETAIL
SCALE 1 : 20

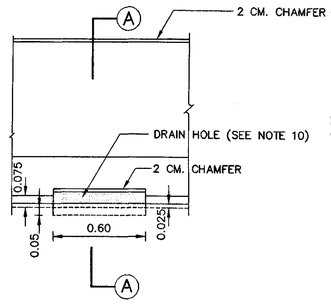

SIDE ELEVATION OF
CONCRETE BARRIER TYPE III
SCALE 1 : 20

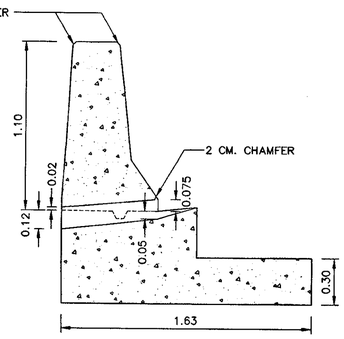

SECTION Ⓐ – Ⓐ
SCALE 1 : 20

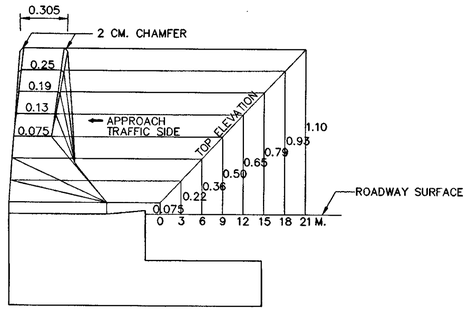

APPROACH CONCRETE BARRIER TYPE E
SCALE 1 : 20

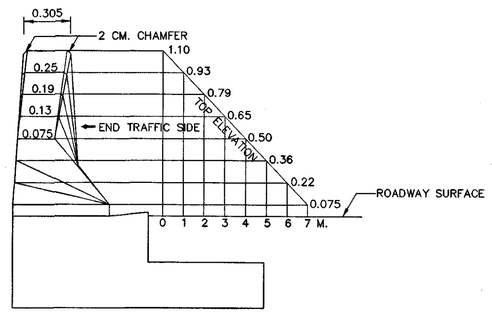

END CONCRETE BARRIER TYPE E
SCALE 1 : 20

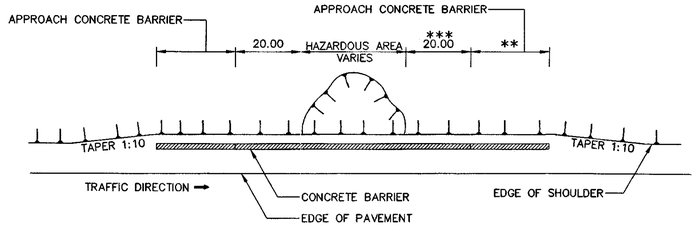

** FOR DIVIDED HIGHWAY SHALL BE OMITTED.
*** FOR DIVIDED HIGHWAY SHALL BE 2 METERS.

INSTALLATION OF CONCRETE BARRIER
NOT TO SCALE

NOTES :

1. ALL DIMENSION ARE IN METERS UNLESS OTHERWISE INDICATED.
2. CONCRETE SHALL HAVE A MINIMUM ULTIMATE COMPRESSIVE STRENGTH OF 30 MPa. (306 KSC.) FOR 15x15x15 CM. CUBE AT 28 DAYS, CEMENT SHALL CONFORM TO TIS. 15 TYPE I PORTLAND CEMENT OR APPROVAL TYPE.
3. REINFORCING STEEL SHALL CONFORM TO TIS. 20 GRADE SR. 24 FOR ROUND BARS AND TIS. 24 GRADE SD 40 FOR DEFORMED BARS.
4. CLEAR CONCRETE COVER SHALL BE 5 CM.
5. REINFORCING AND OTHER DETAILS OF APPROACH CONCRETE BARRIER SHALL BE THE SAME AS CONCRETE BARRIER.
6. CONSTRUCTION JOINT SHALL BE PROVIDED AT 10.00 M. INTERVAL.
7. EXPANSION JOINT WITH NON-EXTRUDING JOINT FILLER SHALL BE PROVIDED AT 60.00 M. INTERVAL AND/OR DRAIN CHUTE POSITION.
8. OUTLET OF CONCRETE BARRIER AT OUTER EDGE SHALL NOT BE CONSTRUCTED WHERE SHOULDER SLOPES TOWARD INNER EDGE AND EXPANSION JOINT SHALL BE PROVIDED NOT MORE THAN 30.00 M. INTERVAL.
9. APPROACH CONCRETE BARRIER SHALL BE PAINTED IN BLACK AND WHITE STRIPE 0.50 M. WIDE, IN TWO COATS. THE PAINT SHALL CONFORM TO TIS. 327.
10. IF NECESSARY TO DRAINAGE THE DRAIN HOLES SHALL BE APPLIED WITH 10.00 M. SPACING. MOREOVER, SPACING MAYBE ADJUSTED AS DIRECTED BY THE ENGINEER.

REMARK :

THIS BARRIER IS SUITABLE ONLY IN SPECIFIC LOCATIONS AND CERTAIN CONDITIONS, IT SHOULD BE APPLIED WITH THE FIRM INFORMATIONS CONCERNED AND RECOMMENDED BY THE ENGINEER.

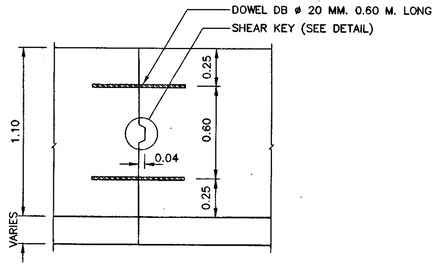

CONSTRUCTION JOINT DETAIL
SCALE 1 : 20

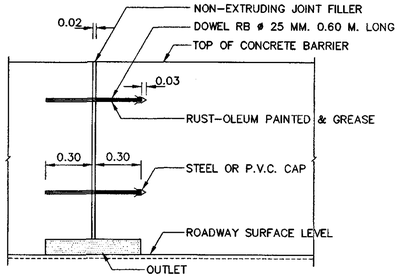

EXPANSION JOINT DETAIL
SCALE 1 : 20

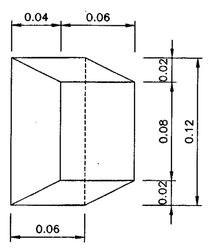

SHEAR KEY DETAIL
SCALE 1 : 2.5

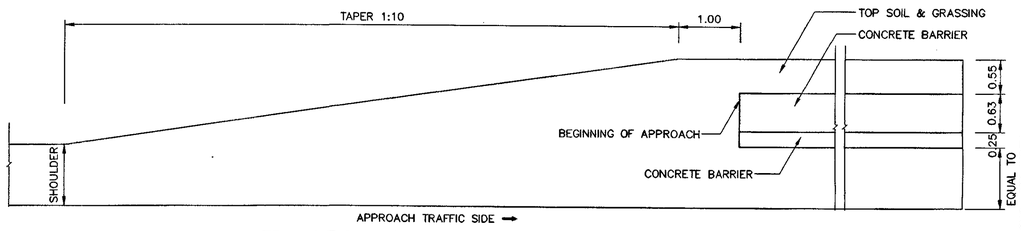

TRANSITION AT APPROACH CONCRETE BARRIER
SCALE 1 : 50

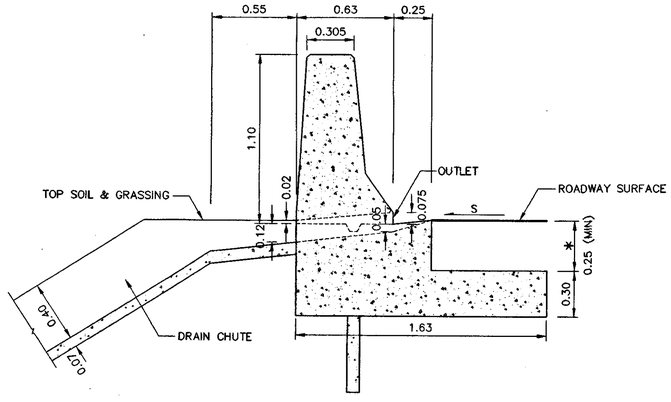

CONCRETE BARRIER TYPE III AT HIGH FILL SECTION
SCALE 1 : 20

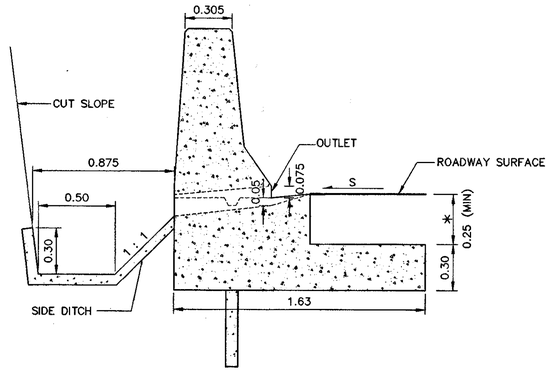

CONCRETE BARRIER TYPE III AT DEEP CUT SECTION
SCALE 1 : 20

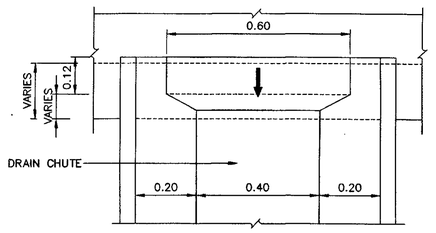

DETAIL OF OUTLET WITH DRAIN CHUTE
SCALE 1 : 10

KINGDOM OF THAILAND

MINISTRY OF TRANSPORT
DEPARTMENT OF HIGHWAYS

STANDARD DRAWING

CONCRETE BARRIER
TYPE III : FOR DEEP CUT AND HIGH FILL

DESIGNED : D.O.H. & CONSULTANTS	CHECKED : BUREAU OF LOCATION & DESIGN	DATE : OCT 2015	
SUBMITTED : (DIRECTOR OF LOCATION & DESIGN BUREAU)		SCALE : AS SHOWN	
APPROVED : (FOR DIRECTOR GENERAL)		DWG NO. RS-610	
		SHEET NO. 83/R1	

REF.	REVISION	SIGNATURE	DATE
REV.1	REVISION 1/2018		MAR 2018

D:\std dwg 2015\RS-610(REV00)

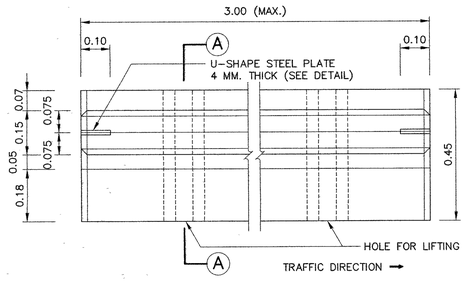

PLAN
NOT TO SCALE

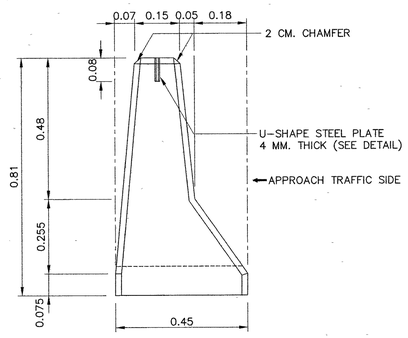

FRONT ELEVATION
SCALE 1 : 10

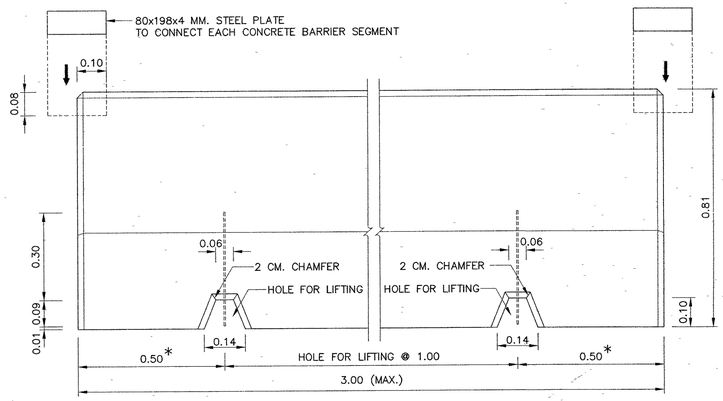

* IF BARRIER LENGTH IS LESS THAN 2 M.,
USING 0.25 M.

SIDE ELEVATION
SCALE 1 : 10

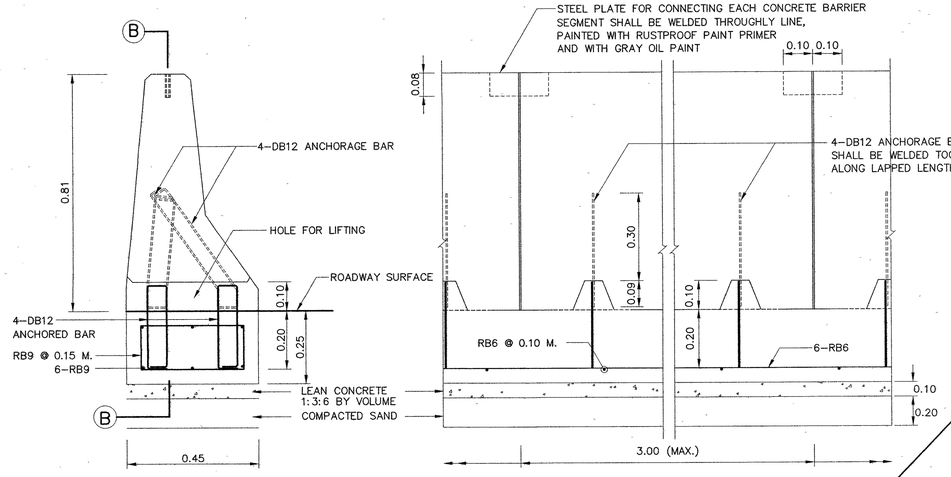

SECTION (A) – (A)

SECTION (B) – (B)

PERMANENT INSTALLATION
SCALE 1 : 10

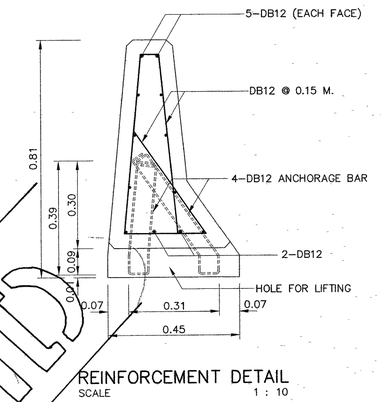

REINFORCEMENT DETAIL
SCALE 1 : 10

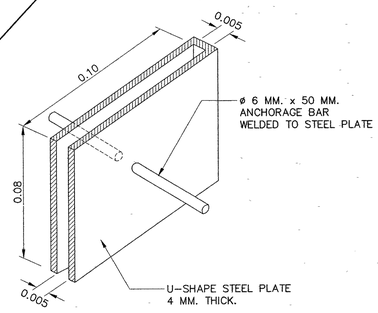

DETAIL OF U-SHAPE STEEL PLATE
NOT TO SCALE

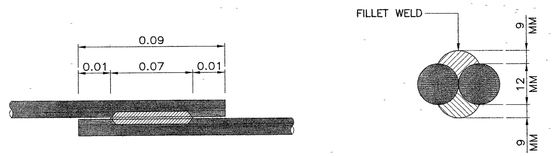

WELDING DETAIL
NOT TO SCALE

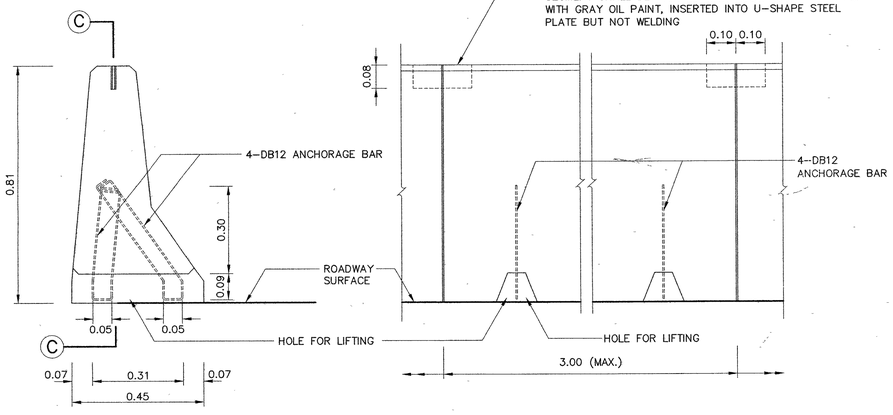

SECTION (A) – (A)

SECTION (C) – (C)

TEMPORARY INSTALLATION
SCALE 1 : 10

GENERAL NOTES :

1. ALL DIMENSION ARE IN METERS UNLESS OTHERWISE INDICATED.
2. CONCRETE SHALL HAVE A MINIMUM ULTIMATE COMPRESSIVE STRENGTH OF 35 MPa. (357 KSC.) FOR 15x15x15 CM. CUBE AT 28 DAYS, CEMENT SHALL CONFORM TO TIS. 15 TYPE I PORTLAND CEMENT OR APPROVAL TYPE.
3. REINFORCING STEEL SHALL CONFORM TO TIS. 20 GRADE SR. 24 FOR ROUND BARS AND TIS. 24 GRADE SD 40 FOR DEFORMED BARS.
4. CLEAR CONCRETE COVER SHALL BE 5 CM.
5. STRUCTURAL STEEL SECTION SHALL CONFORM TO TIS. 1499, PAINTED WITH RUSTPROOF RUST-OLEUM PAINT OR EQUIVALENT TWICE.
6. PRECAST CONCRETE BARRIER SHALL CONFORM TO ASTM C825-79 STANDARD SPECIFICATION FOR PRE-CAST CONCRETE BARRIER.
7. METHOD AND TYPE OF WELDING TO CONNECT EACH CONCRETE BARRIER SEGMENT WHICH STRONGER THAN THAT SHOW IN THIS DRAWING MAY BE USED AS APPROVED BY THE ENGINEER.
8. APPROACH CONCRETE BARRIER SHALL BE PAINTED IN BLACK AND WHITE STRIPE 0.50 M. WIDE, IN TWO COATS. THE PAINT SHALL CONFORM TO TIS. 327.
9. IF NECESSARY, DRAIN HOLE SIZE 0.40 M. WIDE, 0.10 M. HIGH SHALL BE APPLIED FOR DRAINAGE.

PERMANENT INSTALLATION :

METHOD OF INSTALLATION :

1. 0.25 M. BASE SHALL BE CAST-IN-SITU WITH INSERTING ANCHORAGE BAR AS SHOWN IN THE FIGURE.
2. GENERALLY THICKNESS OF THE BASE SHALL BE 0.25 M., FOR CONCRETE PAVEMENT THE THICKNESS SHALL EQUAL TO THICKNESS OF CONCRETE PAVEMENT
3. GENERALLY WIDTH OF THE BASE SHALL BE 0.45 M., IF EDGE OF PAVEMENT CONSTRUCTED ADJACENT TO CONCRETE BARRIER, THE WIDTH SHALL BE ADJUSTED TO 1.45 M. MINIMUM.
4. PRECAST CONCRETE BARRIER SHALL BE LIFTED AT HOLE FOR LIFTING TO INSTALLED. THE ANCHORAGE BARS SHALL BE IN THE SAME POSITION IF NOT, THE CONCRETE BASE SHALL BE ADJUSTED.
5. BOTH ANCHORAGE BARS SHALL WELDED TOGETHER WITH WELDING LENGTH NOT LESS THAN 7.0 CM.
6. 80x198x4 MM. STEEL PLATE SHALL BE INSERTED INTO U-SHAPE STEEL PLATE BOTH STEEL PLATES SHALL BE WELDED TOGETHER. THE WELDING FILLED FULLY U-SHAPE STEEL PLATE TO WATERPROOF, PAINTED WITH RUSTPROOF RUST-OLEUM PAINT OR EQUIVALENT TWICE AND WITH GRAY OIL PAINT TWICE (TIS. 327).
7. THE HOLE FOR LIFTING SHALL BE FILLED FULLY WITH CONCRETE RATIO 1:2:4 BY VOLUME, THE OUTER FACE SHALL BE SMOOTH.
8. JOINTS SHALL BE DECORATED SMOOTHLY BY MORTAR RATIO 1:3 BY VOLUME.
9. IF NECESSARY TO DRAINAGE, THE DRAIN HOLES SHALL BE APPLIED WITH 10.00 M. SPACING OR OTHER SPACING AS DIRECTED BY THE ENGINEER.
10. APPROACH AND END CONCRETE BARRIER SEE DRAWING NO. RS-608.

TEMPORARY INSTALLATION :

METHOD OF INSTALLATION :

1. PRECAST CONCRETE BARRIER SHALL BE LIFTED AT HOLE FOR LIFTING TO INSTALLED. THE ANCHORAGE BARS SHALL BE IN THE SAME POSITION IF NOT, THE CONCRETE BASE SHALL BE ADJUSTED.
2. 80x198x4 MM. STEEL PLATE SHALL BE INSERTED INTO U-SHAPE STEEL PLATE, NOT BE WELDED TOGETHER THE STEEL PLATES SHALL BE PAINTED WITH RUSTPROOF RUST-OLEUM PAINT OR EQUIVALENT TWICE AND WITH GRAY OIL PAINT TWICE (TIS. 327).
3. TEMPORARY INSTALLATION SHALL BE USED AS NECESSARY ONLY BECAUSE LACK OF STRENGTH. THE CONCRETE BARRIER SHALL BE REMOVED IMMEDIATELY IF NOT USED OR CONVERTED TO PERMANENT INSTALLATION AS SOON AS.

REMARK :

THIS BARRIER IS SUITABLE ONLY IN SPECIFIC LOCATIONS AND CERTAIN CONDITIONS, IT SHOULD BE APPLIED WITH THE FIRM INFORMATIONS CONCERNED AND RECOMMENDED BY THE ENGINEER.

VOID

REF.	REVISION	SIGNATURE	DATE

KINGDOM OF THAILAND

MINISTRY OF TRANSPORT
DEPARTMENT OF HIGHWAYS

STANDARD DRAWING

CONCRETE BARRIER
PRE-CAST CONCRETE BARRIER TYPE IA

DESIGNED : D.O.H. & CONSULTANTS	**CHECKED :** BUREAU OF LOCATION & DESIGN	**DATE :** OCT 2015
SUBMITTED : (DIRECTOR OF LOCATION & DESIGN BUREAU)		**SCALE :** AS SHOWN
APPROVED : (FOR DIRECTOR GENERAL)		**DWG NO.** RS-611
		SHEET NO. 84

D:\std dwg 2015\RS-611(REV00)

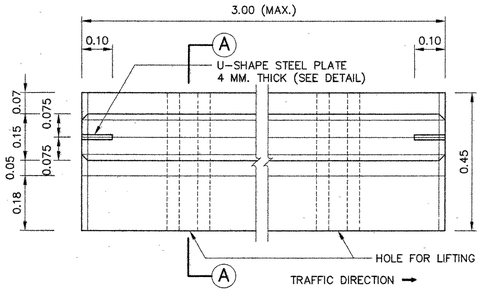

PLAN
NOT TO SCALE

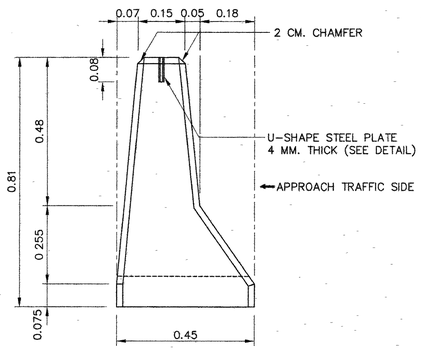

FRONT ELEVATION
SCALE 1 : 10

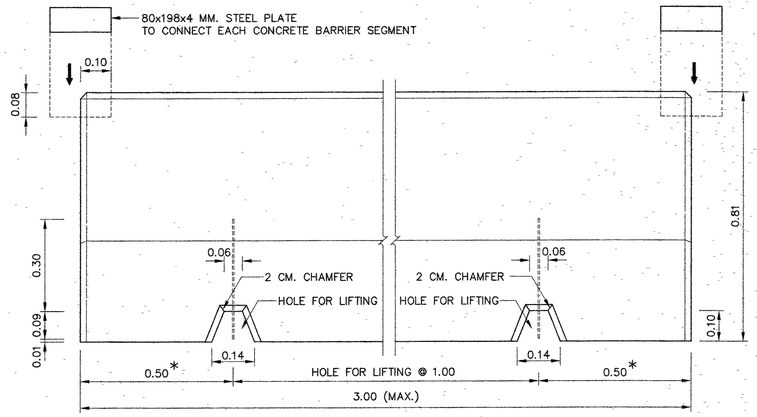

* IF BARRIER LENGTH IS LESS THAN 2 M., USING 0.25 M.

SIDE ELEVATION
SCALE 1 : 10

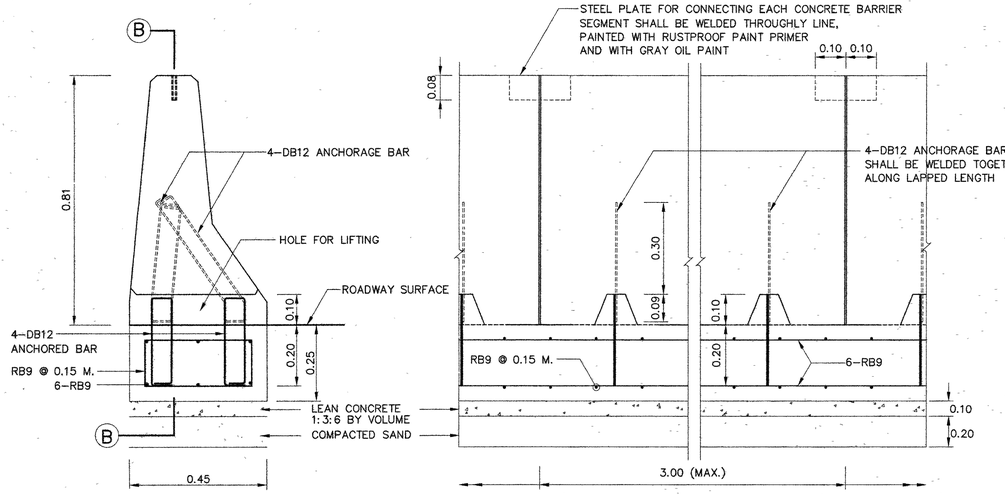

SECTION Ⓐ – Ⓐ

SECTION Ⓑ – Ⓑ

PERMANENT INSTALLATION
SCALE 1 : 10

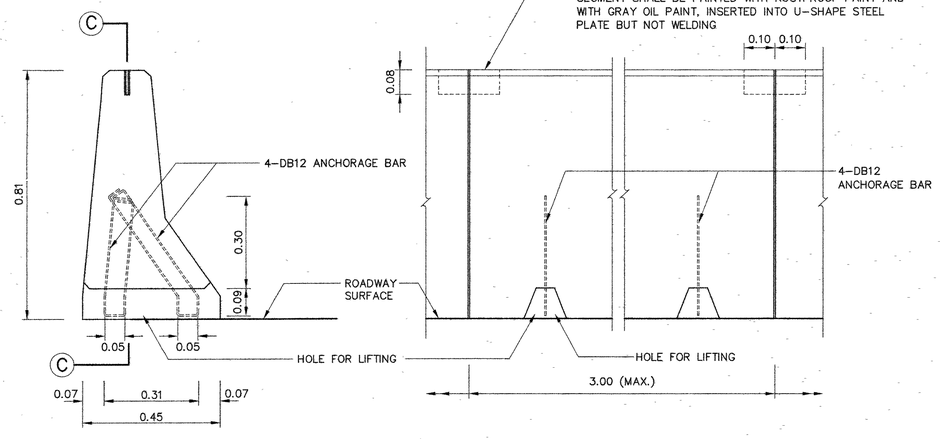

SECTION Ⓐ – Ⓐ

SECTION Ⓒ – Ⓒ

TEMPORARY INSTALLATION
SCALE 1 : 10

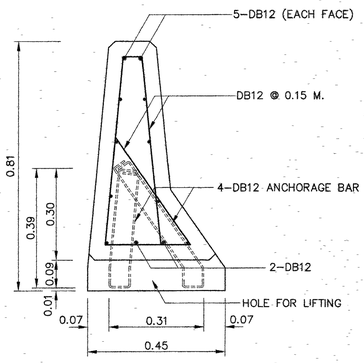

REINFORCEMENT DETAIL
SCALE 1 : 10

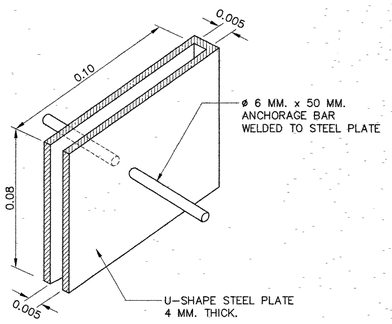

DETAIL OF U-SHAPE STEEL PLATE
NOT TO SCALE

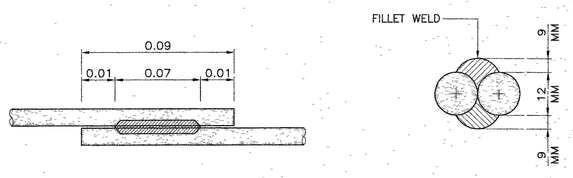

WELDING DETAIL
NOT TO SCALE

GENERAL NOTES :

1. ALL DIMENSION ARE IN METERS UNLESS OTHERWISE INDICATED.
2. CONCRETE SHALL HAVE A MINIMUM ULTIMATE COMPRESSIVE STRENGTH OF 35 MPa. (357 KSC.) FOR 15x15x15 CM. CUBE AT 28 DAYS, CEMENT SHALL CONFORM TO TIS. 15 TYPE I PORTLAND CEMENT OR APPROVAL TYPE.
3. REINFORCING STEEL SHALL CONFORM TO TIS. 20 GRADE SR. 24 FOR ROUND BARS AND TIS. 24 GRADE SD 40 FOR DEFORMED BARS.
4. CLEAR CONCRETE COVER SHALL BE 5 CM.
5. STRUCTURAL STEEL SECTION SHALL CONFORM TO TIS. 1499, PAINTED WITH RUSTPROOF RUST-OLEUM PAINT OR EQUIVALENT TWICE.
6. PRECAST CONCRETE BARRIER SHALL CONFORM TO ASTM C825-79 STANDARD SPECIFICATION FOR PRE-CAST CONCRETE BARRIER.
7. METHOD AND TYPE OF WELDING TO CONNECT EACH CONCRETE BARRIER SEGMENT WHICH STRONGER THAN THAT SHOW IN THIS DRAWING MAY BE USED AS APPROVED BY THE ENGINEER.
8. APPROACH CONCRETE BARRIER SHALL BE PAINTED IN BLACK AND WHITE STRIPE 0.50 M. WIDE, IN TWO COATS. THE PAINT SHALL CONFORM TO TIS. 327.
9. IF NECESSARY, DRAIN HOLE SIZE 0.40 M. WIDE, 0.10 M. HIGH SHALL BE APPLIED FOR DRAINAGE.

PERMANENT INSTALLATION :

METHOD OF INSTALLATION :

1. 0.25 M. BASE SHALL BE CAST-IN-SITU WITH INSERTING ANCHORAGE BAR AS SHOWN IN THE FIGURE.
2. GENERALLY THICKNESS OF THE BASE SHALL BE 0.25 M., FOR CONCRETE PAVEMENT THE THICKNESS SHALL EQUAL TO THICKNESS OF CONCRETE PAVEMENT
3. GENERALLY WIDTH OF THE BASE SHALL BE 0.45 M., IF EDGE OF PAVEMENT CONSTRUCTED ADJACENT TO CONCRETE BARRIER, THE WIDTH SHALL BE ADJUSTED TO 1.45 M. MINIMUM.
4. PRECAST CONCRETE BARRIER SHALL BE LIFTED AT HOLE FOR LIFTING TO INSTALLED. THE ANCHORAGE BARS SHALL BE IN THE SAME POSITION IF NOT, THE CONCRETE BASE SHALL BE ADJUSTED.
5. BOTH ANCHORAGE BARS SHALL WELDED TOGETHER WITH WELDING LENGTH NOT LESS THAN 7.0 CM.
6. 80x198x4 MM. STEEL PLATE SHALL BE INSERTED INTO U-SHAPE STEEL PLATE BOTH STEEL PLATES SHALL BE WELDED TOGETHER. THE WELDING FILLED FULLY U-SHAPE STEEL PLATE TO WATERPROOF, PAINTED WITH RUSTPROOF RUST-OLEUM PAINT OR EQUIVALENT TWICE AND WITH GRAY OIL PAINT TWICE (TIS. 327).
7. THE HOLE FOR LIFTING SHALL BE FILLED FULLY WITH CONCRETE RATIO 1:2:4 BY VOLUME, THE OUTER FACE SHALL BE SMOOTH.
8. JOINTS SHALL BE DECORATED SMOOTHLY BY MORTAR RATIO 1:3 BY VOLUME.
9. IF NECESSARY TO DRAINAGE, THE DRAIN HOLES SHALL BE APPLIED WITH 10.00 M. SPACING OR OTHER SPACING AS DIRECTED BY THE ENGINEER.
10. APPROACH AND END CONCRETE BARRIER SEE DRAWING NO. RS-608.

TEMPORARY INSTALLATION :

METHOD OF INSTALLATION :

1. PRECAST CONCRETE BARRIER SHALL BE LIFTED AT HOLE FOR LIFTING TO INSTALLED. THE ANCHORAGE BARS SHALL BE IN THE SAME POSITION IF NOT, THE CONCRETE BASE SHALL BE ADJUSTED.
2. 80x198x4 MM. STEEL PLATE SHALL BE INSERTED INTO U-SHAPE STEEL PLATE, NOT BE WELDED TOGETHER THE STEEL PLATES SHALL BE PAINTED WITH RUSTPROOF RUST-OLEUM PAINT OR EQUIVALENT TWICE AND WITH GRAY OIL PAINT TWICE (TIS. 327).
3. TEMPORARY INSTALLATION SHALL BE USED AS NECESSARY ONLY BECAUSE LACK OF STRENGTH. THE CONCRETE BARRIER SHALL BE REMOVED IMMEDIATELY IF NOT USED OR CONVERTED TO PERMANENT INSTALLATION AS SOON AS.

REMARK :

THIS BARRIER IS SUITABLE ONLY IN SPECIFIC LOCATIONS AND CERTAIN CONDITIONS, IT SHOULD BE APPLIED WITH THE FIRM INFORMATIONS CONCERNED AND RECOMMENDED BY THE ENGINEER.

REF	REVISION	SIGNATURE	DATE

KINGDOM OF THAILAND

MINISTRY OF TRANSPORT

DEPARTMENT OF HIGHWAYS

STANDARD DRAWING

CONCRETE BARRIER

PRE-CAST CONCRETE BARRIER TYPE IA

DESIGNED : D.O.H. & CONSULTANTS	**CHECKED :** BUREAU OF LOCATION & DESIGN	**DATE :** OCT 2015
SUBMITTED : (DIRECTOR OF LOCATION & DESIGN BUREAU)		**SCALE :** AS SHOWN
APPROVED : (FOR DIRECTOR GENERAL)		**DWG NO.** RS-611
		SHEET NO. 84/RI

D:\STD DWG 2015\RS-611(REV01)

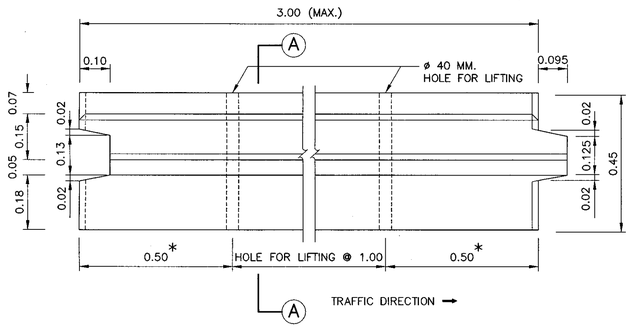

* IF BARRIER LENGTH IS LESS THAN 2 M., USING 0.25 M.

PLAN
SCALE 1 : 10

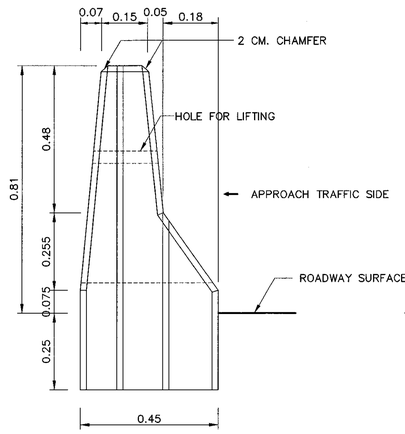

FRONT ELEVATION
SCALE 1 : 10

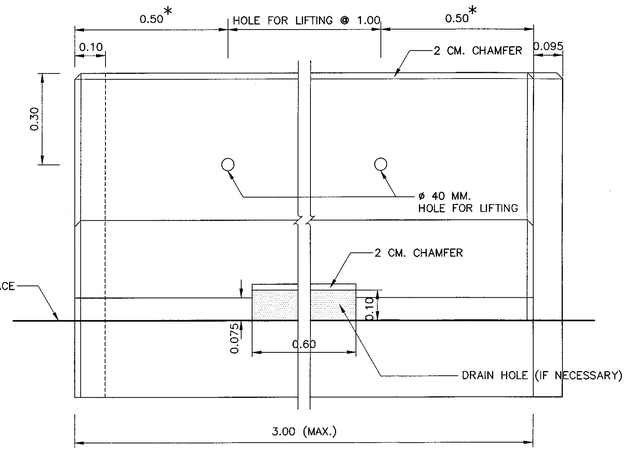

SIDE ELEVATION
SCALE 1 : 10

NOTES :

1. ALL DIMENSION ARE IN METERS UNLESS OTHERWISE INDICATED.
2. CONCRETE SHALL HAVE A MINIMUM ULTIMATE COMPRESSIVE STRENGTH OF 35 MPa. (357 KSC.) FOR 15x15x15 CM. CUBE AT 28 DAYS, CEMENT SHALL CONFORM TO TIS. 15 TYPE I PORTLAND CEMENT OR APPROVAL TYPE.
3. REINFORCING STEEL SHALL CONFORM TO TIS. 20 GRADE SR. 24 FOR ROUND BARS AND TIS. 24 GRADE SD 40 FOR DEFORMED BARS.
4. CLEAR CONCRETE COVER SHALL BE 5 CM.
5. STRUCTURAL STEEL SECTION SHALL CONFORM TO TIS. 528, PAINTED WITH RUSTPROOF RUST–OLEUM PAINT OR EQUIVALENT TWICE.
6. PRECAST CONCRETE BARRIER SHALL CONFORM TO ASTM C825–79 STANDARD SPECIFICATION FOR PRE–CAST CONCRETE BARRIER.
7. METHOD AND TYPE OF WELDING TO CONNECT EACH CONCRETE BARRIER SEGMENT WHICH STRONGER THAN THAT SHOW IN THIS DRAWING MAY BE USED AS APPROVED BY THE ENGINEER.
8. APPROACH CONCRETE BARRIER SHALL BE PAINTED IN BLACK AND WHITE STRIPE 0.50 M. WIDE, IN TWO COATS. THE PAINT SHALL CONFORM TO TIS. 327.
9. IF NECESSARY, DRAIN HOLE SIZE 0.60 M. WIDE, 0.10 M. HIGH SHALL BE APPLIED WITH 10.00 M. SPACING OR OTHER SPACING AS DIRECTED BY THE ENGINEER.
10. THE HOLE FOR LIFTING SHALL BE FILLED FULLY WITH NON–SHRINK MORTOR, THE OUTER FACE SHALL BE SMOOTH.
11. JOINTS SHALL BE DECORATED SMOOTHLY BY MORTAR RATIO 1:3 BY VOLUME.
12. APPROACH AND END CONCRETE BARRIER SEE DRAWING NO. RS–608.

REMARK :

THIS BARRIER IS SUITABLE ONLY IN SPECIFIC LOCATIONS AND CERTAIN CONDITIONS, IT SHOULD BE APPLIED WITH THE FIRM INFORMATIONS CONCERNED AND RECOMMENDED BY THE ENGINEER.

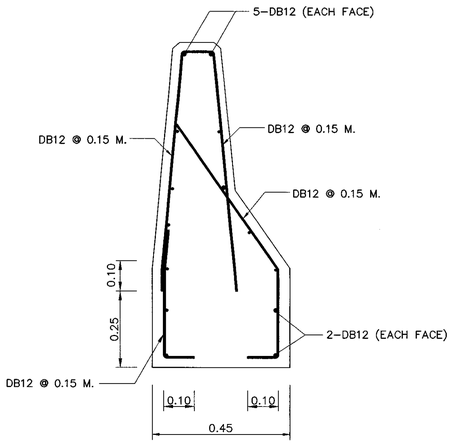

REINFORCEMENT DETAIL
SCALE 1 : 10

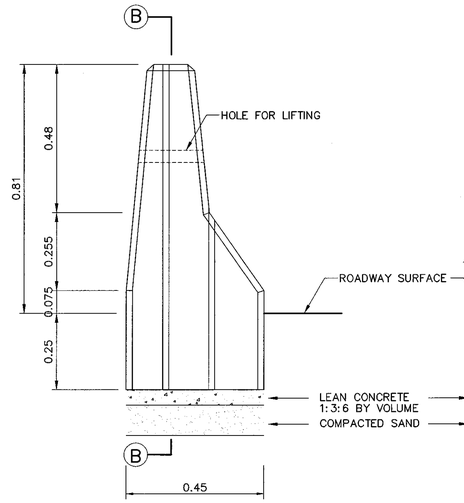

SECTION Ⓐ – Ⓐ

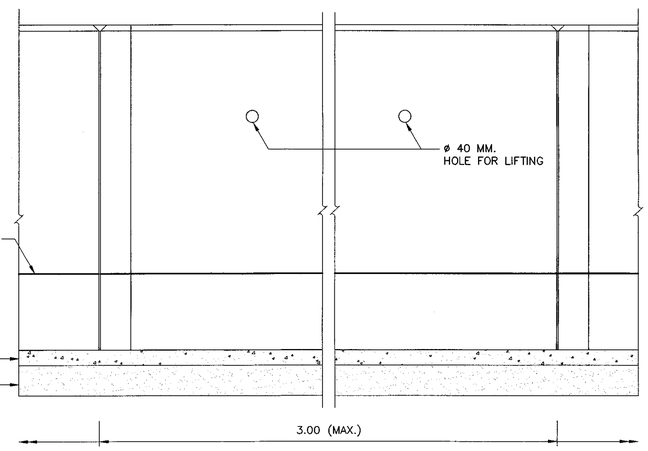

SECTION Ⓑ – Ⓑ

INSTALLATION
SCALE 1 : 10

KINGDOM OF THAILAND

MINISTRY OF TRANSPORT
DEPARTMENT OF HIGHWAYS

STANDARD DRAWING

CONCRETE BARRIER
PRE–CAST CONCRETE BARRIER TYPE IB

DESIGNED : D.O.H. & CONSULTANTS	CHECKED : BUREAU OF LOCATION & DESIGN	DATE : OCT 2015	
SUBMITTED : (DIRECTOR OF LOCATION & DESIGN BUREAU)		SCALE : AS SHOWN	
APPROVED : (FOR DIRECTOR GENERAL)		DWG NO. RS–612	
		SHEET NO. 85	

REF.	REVISION	SIGNATURE	DATE

D:\std dwg 2015\RS-612(REV00)

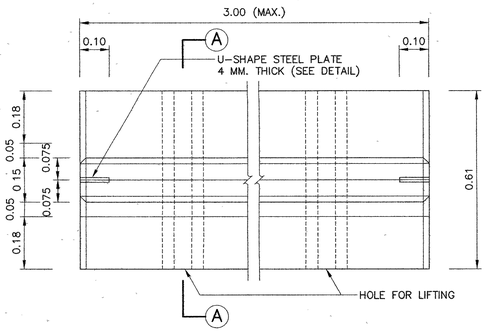

PLAN
SCALE 1 : 10

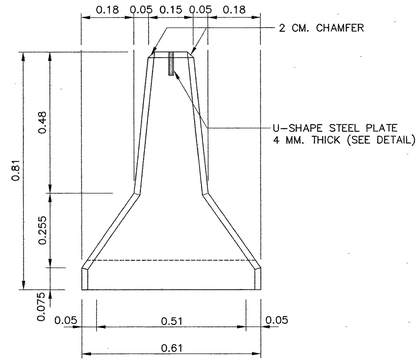

FRONT ELEVATION
SCALE 1 : 10

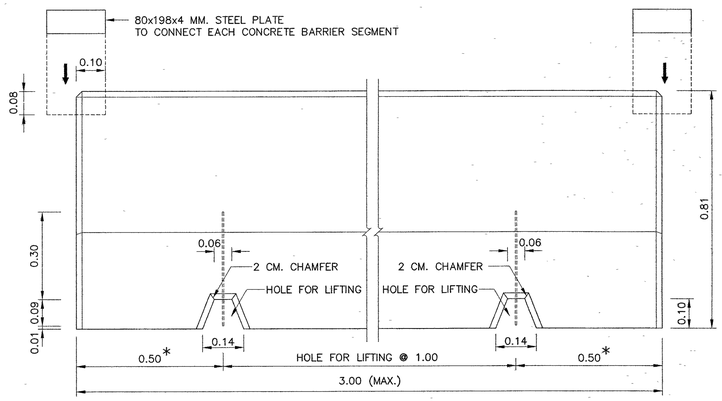

* IF BARRIER LENGTH IS LESS THAN 2 M.,
USING 0.25 M.

SIDE ELEVATION
SCALE 1 : 10

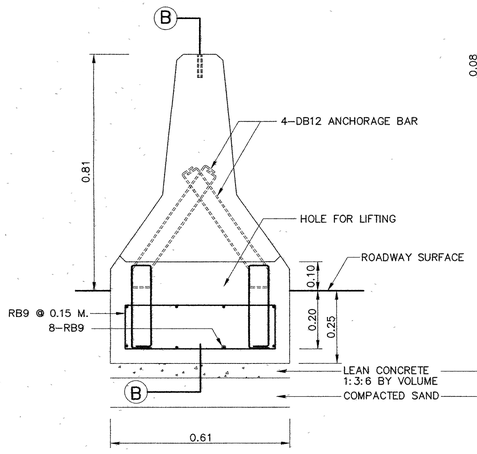

SECTION (A) – (A)

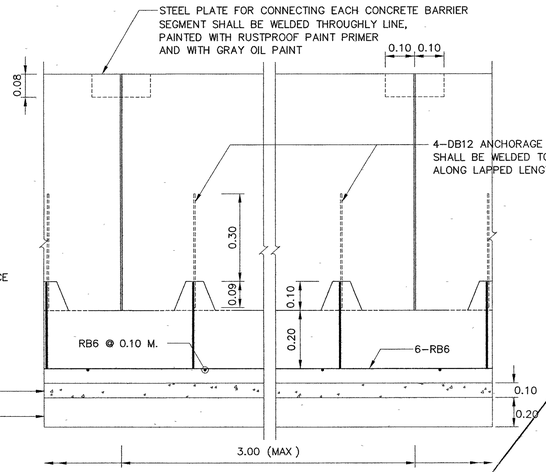

SECTION (B) – (B)

PERMANENT INSTALLATION
SCALE 1 : 10

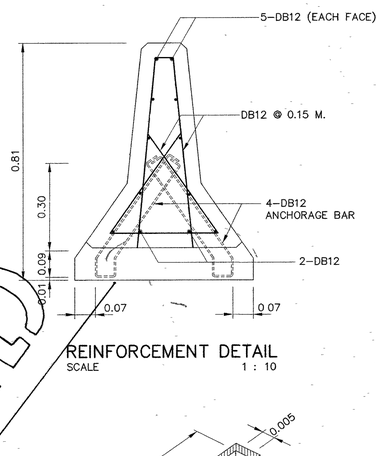

REINFORCEMENT DETAIL
SCALE 1 : 10

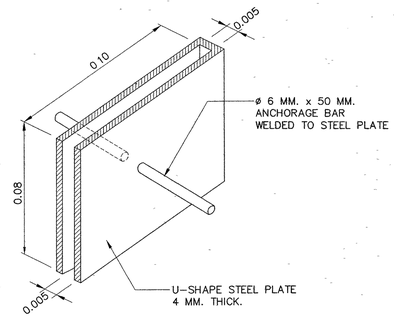

DETAIL OF U-SHAPE STEEL PLATE
NOT TO SCALE

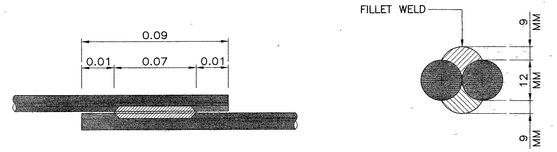

WELDING DETAIL
NOT TO SCALE

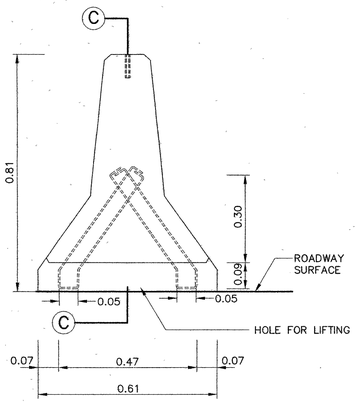

SECTION (A) – (A)

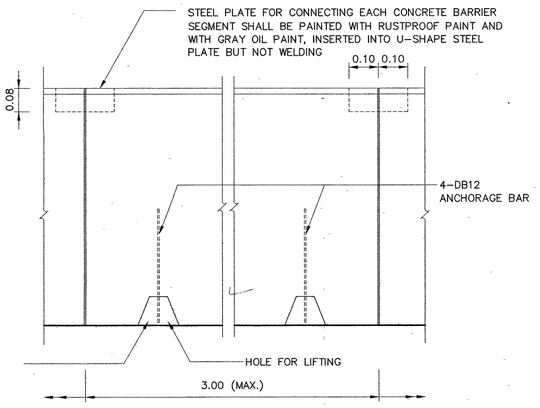

SECTION (C) – (C)

TEMPORARY INSTALLATION
SCALE 1 : 10

GENERAL NOTES :

1. ALL DIMENSION ARE IN METERS UNLESS OTHERWISE INDICATED.
2. CONCRETE SHALL HAVE A MINIMUM ULTIMATE COMPRESSIVE STRENGTH OF 35 MPa. (357 KSC.) FOR 15x15x15 CM. CUBE AT 28 DAYS, CEMENT SHALL CONFORM TO TIS. 15 TYPE I PORTLAND CEMENT OR APPROVAL TYPE.
3. REINFORCING STEEL SHALL CONFORM TO TIS. 20 GRADE SR. 24 FOR ROUND BARS AND TIS. 24 GRADE SD 40 FOR DEFORMED BARS.
4. CLEAR CONCRETE COVER SHALL BE 5 CM.
5. STRUCTURAL STEEL SECTION SHALL CONFORM TO TIS. 1499, PAINTED WITH RUSTPROOF RUST-OLEUM PAINT OR EQUIVALENT TWICE.
6. PRECAST CONCRETE BARRIER SHALL CONFORM TO ASTM C825-79 STANDARD SPECIFICATION FOR PRE-CAST CONCRETE BARRIER.
7. METHOD AND TYPE OF WELDING TO CONNECT EACH CONCRETE BARRIER SEGMENT WHICH STRONGER THAN THAT SHOW IN THIS DRAWING MAY BE USED AS APPROVED BY THE ENGINEER.
8. APPROACH CONCRETE BARRIER SHALL BE PAINTED IN BLACK AND WHITE STRIPE 0.50 M. WIDE, IN TWO COATS. THE PAINT SHALL CONFORM TO TIS. 327.
9. IF NECESSARY, DRAIN HOLE SIZE 0.40 M. WIDE, 0.10 M. HIGH SHALL BE APPLIED FOR DRAINAGE.

PERMANENT INSTALLATION :

METHOD OF INSTALLATION :

1. 0.25 M. BASE SHALL BE CAST-IN-SITU WITH INSERTING ANCHORAGE BAR AS SHOWN IN THE FIGURE.
2. GENERALLY THICKNESS OF THE BASE SHALL BE 0.25 M., FOR CONCRETE PAVEMENT THE THICKNESS SHALL EQUAL TO THICKNESS OF CONCRETE PAVEMENT
3. PRECAST CONCRETE BARRIER SHALL BE LIFTED AT HOLE FOR LIFTING TO INSTALLED. THE ANCHORAGE BARS SHALL BE IN THE SAME POSITION IF NOT, THE CONCRETE BASE SHALL BE ADJUSTED.
4. BOTH ANCHORAGE BARS SHALL WELDED TOGETHER WITH WELDING LENGTH NOT LESS THAN 7.0 CM.
5. 80x198x4 MM. STEEL PLATE SHALL BE INSERTED INTO U-SHAPE STEEL PLATE BOTH STEEL PLATES SHALL BE WELDED TOGETHER. THE WELDING FILLED FULLY U-SHAPE STEEL PLATE TO WATERPROOF, PAINTED WITH RUSTPROOF RUST-OLEUM PAINT OR EQUIVALENT TWICE AND WITH GRAY OIL PAINT TWICE (TIS. 327).
6. THE HOLE FOR LIFTING SHALL BE FILLED FULLY WITH CONCRETE RATIO 1:2:4 BY VOLUME, THE OUTER FACE SHALL BE SMOOTH.
7. JOINTS SHALL BE DECORATED SMOOTHLY BY MORTAR RATIO 1:3 BY VOLUME.
8. IF NECESSARY TO DRAINAGE, THE DRAIN HOLES SHALL BE APPLIED WITH 10.00 M. SPACING OR OTHER SPACING AS DIRECTED BY THE ENGINEER.
9. APPROACH AND END CONCRETE BARRIER SEE DRAWING NO. RS-609.

TEMPORARY INSTALLATION :

METHOD OF INSTALLATION :

1. PRECAST CONCRETE BARRIER SHALL BE LIFTED AT HOLE FOR LIFTING TO INSTALLED. THE ANCHORAGE BARS SHALL BE IN THE SAME POSITION IF NOT, THE CONCRETE BASE SHALL BE ADJUSTED.
2. 80x198x4 MM. STEEL PLATE SHALL BE INSERTED INTO U-SHAPE STEEL PLATE, NOT BE WELDED TOGETHER THE STEEL PLATES SHALL BE PAINTED WITH RUSTPROOF RUST-OLEUM PAINT OR EQUIVALENT TWICE AND WITH GRAY OIL PAINT TWICE (TIS. 327).
3. TEMPORARY INSTALLATION SHALL BE USED AS NECESSARY ONLY BECAUSE LACK OF STRENGTH. THE CONCRETE BARRIER SHALL BE REMOVED IMMEDIATELY IF NOT USED OR CONVERTED TO PERMANENT INSTALLATION AS SOON AS.

REMARK :

THIS BARRIER IS SUITABLE ONLY IN SPECIFIC LOCATIONS AND CERTAIN CONDITIONS, IT SHOULD BE APPLIED WITH THE FIRM INFORMATIONS CONCERNED AND RECOMMENDED BY THE ENGINEER.

VOID

REF.	REVISION	SIGNATURE	DATE

KINGDOM OF THAILAND

MINISTRY OF TRANSPORT
DEPARTMENT OF HIGHWAYS

STANDARD DRAWING

CONCRETE BARRIER
PRE-CAST CONCRETE BARRIER TYPE IIA

DESIGNED : D.O.H. & CONSULTANTS	**CHECKED :** BUREAU OF LOCATION & DESIGN	**DATE :** OCT 2015
SUBMITTED : (DIRECTOR OF LOCATION & DESIGN BUREAU)		**SCALE :** AS SHOWN
APPROVED : (FOR DIRECTOR GENERAL)		**DWG NO.** RS-613
		SHEET NO. 86

D:\std dwg 2015\RS-613(REV00)

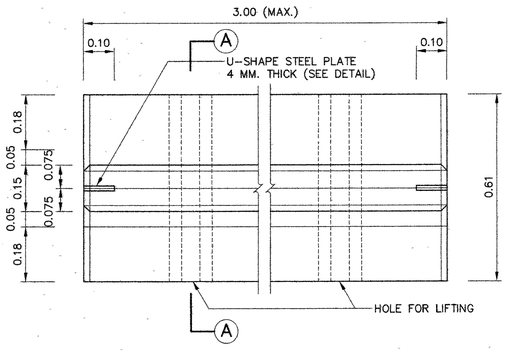

PLAN
SCALE 1 : 10

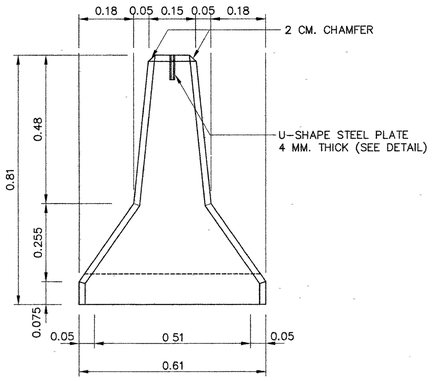

FRONT ELEVATION
SCALE 1 : 10

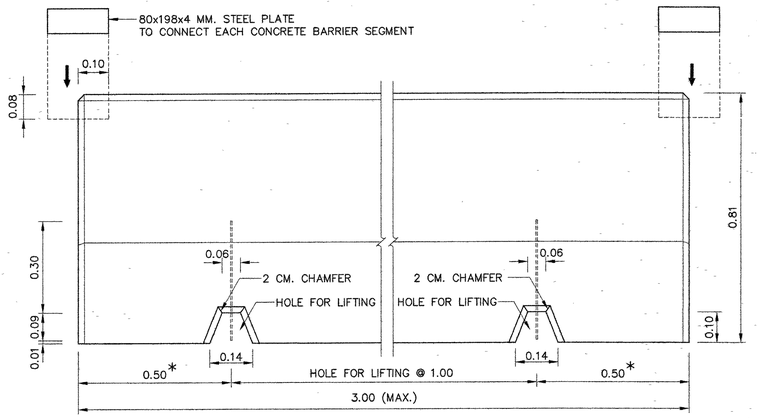

* IF BARRIER LENGTH IS LESS THAN 2 M.,
USING 0.25 M.

SIDE ELEVATION
SCALE 1 : 10

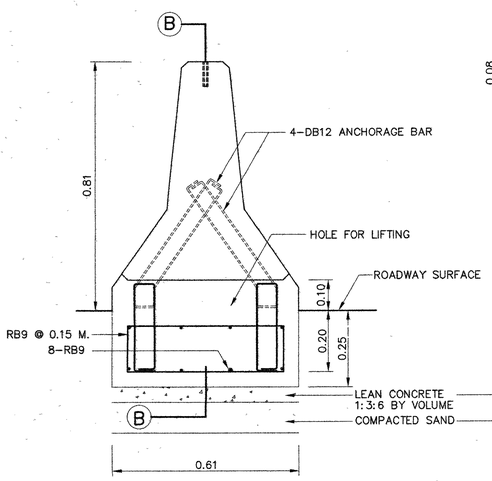

SECTION Ⓐ – Ⓐ

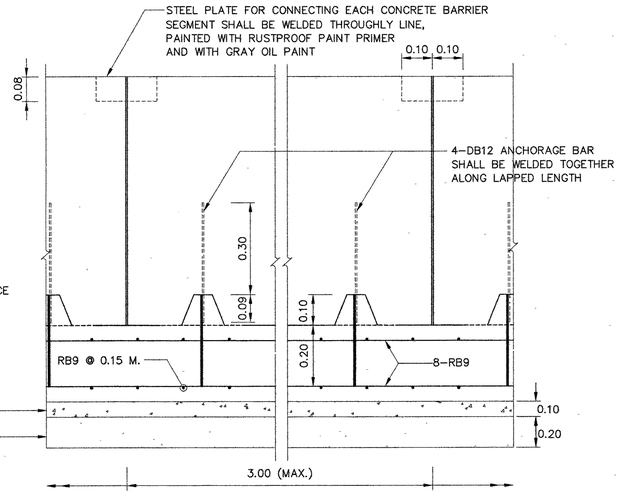

SECTION Ⓑ – Ⓑ

PERMANENT INSTALLATION
SCALE 1 : 10

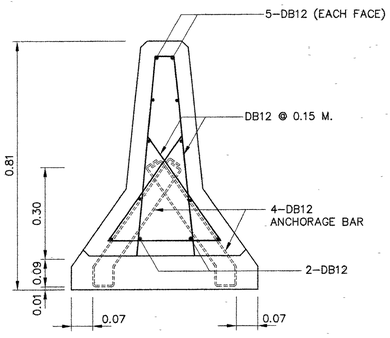

REINFORCEMENT DETAIL
SCALE 1 : 10

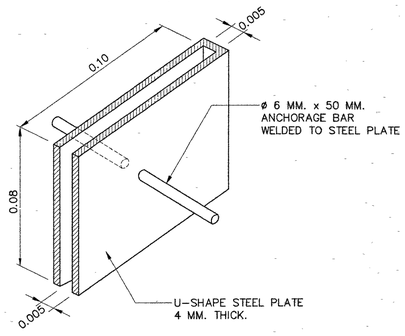

DETAIL OF U-SHAPE STEEL PLATE
NOT TO SCALE

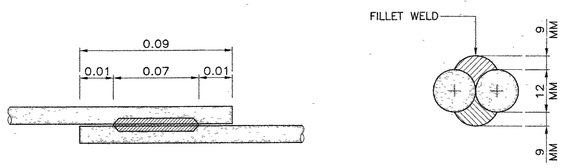

WELDING DETAIL
NOT TO SCALE

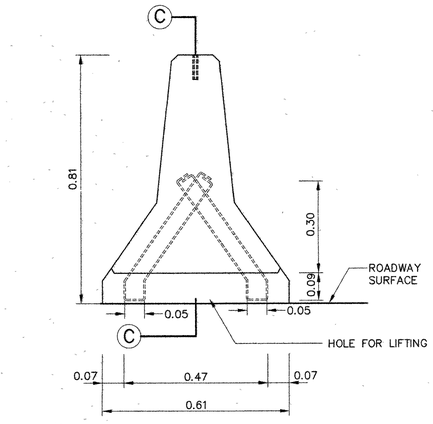

SECTION Ⓐ – Ⓐ

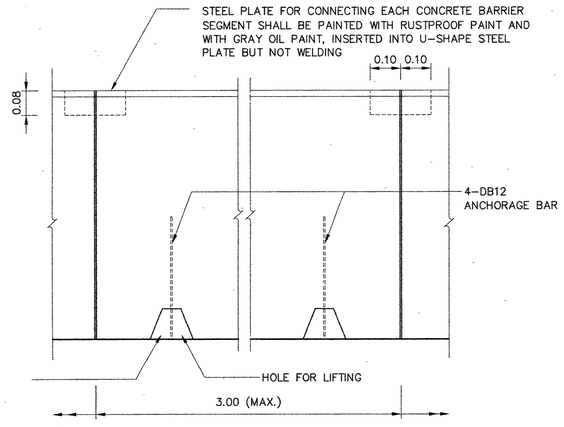

SECTION Ⓒ – Ⓒ

TEMPORARY INSTALLATION
SCALE 1 : 10

GENERAL NOTES :

1. ALL DIMENSION ARE IN METERS UNLESS OTHERWISE INDICATED.
2. CONCRETE SHALL HAVE A MINIMUM ULTIMATE COMPRESSIVE STRENGTH OF 35 MPa. (357 KSC.) FOR 15x15x15 CM. CUBE AT 28 DAYS, CEMENT SHALL CONFORM TO TIS. 15 TYPE I PORTLAND CEMENT OR APPROVAL TYPE.
3. REINFORCING STEEL SHALL CONFORM TO TIS. 20 GRADE SR. 24 FOR ROUND BARS AND TIS. 24 GRADE SD 40 FOR DEFORMED BARS.
4. CLEAR CONCRETE COVER SHALL BE 5 CM.
5. STRUCTURAL STEEL SECTION SHALL CONFORM TO TIS. 1499, PAINTED WITH RUSTPROOF RUST-OLEUM PAINT OR EQUIVALENT TWICE.
6. PRECAST CONCRETE BARRIER SHALL CONFORM TO ASTM C825-79 STANDARD SPECIFICATION FOR PRE-CAST CONCRETE BARRIER.
7. METHOD AND TYPE OF WELDING TO CONNECT EACH CONCRETE BARRIER SEGMENT WHICH STRONGER THAN THAT SHOW IN THIS DRAWING MAY BE USED AS APPROVED BY THE ENGINEER.
8. APPROACH CONCRETE BARRIER SHALL BE PAINTED IN BLACK AND WHITE STRIPE 0.50 M. WIDE, IN TWO COATS. THE PAINT SHALL CONFORM TO TIS. 327.
9. IF NECESSARY, DRAIN HOLE SIZE 0.40 M. WIDE, 0.10 M. HIGH SHALL BE APPLIED FOR DRAINAGE.

PERMANENT INSTALLATION :

METHOD OF INSTALLATION :

1. 0.25 M. BASE SHALL BE CAST-IN-SITU WITH INSERTING ANCHORAGE BAR AS SHOWN IN THE FIGURE.
2. GENERALLY THICKNESS OF THE BASE SHALL BE 0.25 M., FOR CONCRETE PAVEMENT THE THICKNESS SHALL EQUAL TO THICKNESS OF CONCRETE PAVEMENT
3. PRECAST CONCRETE BARRIER SHALL BE LIFTED AT HOLE FOR LIFTING TO INSTALLED. THE ANCHORAGE BARS SHALL BE IN THE SAME POSITION IF NOT, THE CONCRETE BASE SHALL BE ADJUSTED.
4. BOTH ANCHORAGE BARS SHALL WELDED TOGETHER WITH WELDING LENGTH NOT LESS THAN 7.0 CM.
5. 80x198x4 MM. STEEL PLATE SHALL BE INSERTED INTO U-SHAPE STEEL PLATE BOTH STEEL PLATES SHALL BE WELDED TOGETHER. THE WELDING FILLED FULLY U-SHAPE STEEL PLATE TO WATERPROOF, PAINTED WITH RUSTPROOF RUST-OLEUM PAINT OR EQUIVALENT TWICE AND WITH GRAY OIL PAINT TWICE (TIS. 327).
6. THE HOLE FOR LIFTING SHALL BE FILLED FULLY WITH CONCRETE RATIO 1:2:4 BY VOLUME, THE OUTER FACE SHALL BE SMOOTH.
7. JOINTS SHALL BE DECORATED SMOOTHLY BY MORTAR RATIO 1:3 BY VOLUME.
8. IF NECESSARY TO DRAINAGE, THE DRAIN HOLES SHALL BE APPLIED WITH 10.00 M. SPACING OR OTHER SPACING AS DIRECTED BY THE ENGINEER.
9. APPROACH AND END CONCRETE BARRIER SEE DRAWING NO. RS-609.

TEMPORARY INSTALLATION :

METHOD OF INSTALLATION :

1. PRECAST CONCRETE BARRIER SHALL BE LIFTED AT HOLE FOR LIFTING TO INSTALLED. THE ANCHORAGE BARS SHALL BE IN THE SAME POSITION IF NOT, THE CONCRETE BASE SHALL BE ADJUSTED.
2. 80x198x4 MM. STEEL PLATE SHALL BE INSERTED INTO U-SHAPE STEEL PLATE, NOT BE WELDED TOGETHER THE STEEL PLATES SHALL BE PAINTED WITH RUSTPROOF RUST-OLEUM PAINT OR EQUIVALENT TWICE AND WITH GRAY OIL PAINT TWICE (TIS. 327).
3. TEMPORARY INSTALLATION SHALL BE USED AS NECESSARY ONLY BECAUSE LACK OF STRENGTH. THE CONCRETE BARRIER SHALL BE REMOVED IMMEDIATELY IF NOT USED OR CONVERTED TO PERMANENT INSTALLATION AS SOON AS.

REMARK :

THIS BARRIER IS SUITABLE ONLY IN SPECIFIC LOCATIONS AND CERTAIN CONDITIONS, IT SHOULD BE APPLIED WITH THE FIRM INFORMATIONS CONCERNED AND RECOMMENDED BY THE ENGINEER.

KINGDOM OF THAILAND

MINISTRY OF TRANSPORT
DEPARTMENT OF HIGHWAYS

STANDARD DRAWING

CONCRETE BARRIER
PRE-CAST CONCRETE BARRIER TYPE IIA

DESIGNED : D.O.H. & CONSULTANTS	**CHECKED :** BUREAU OF LOCATION & DESIGN		**DATE :** OCT 2015
SUBMITTED : (DIRECTOR OF LOCATION & DESIGN BUREAU)			**SCALE :** AS SHOWN
APPROVED : (FOR DIRECTOR GENERAL)			**DWG NO.** RS-613
			SHEET NO. 86/RI

REF	REVISION	SIGNATURE	DATE

D:\STD DWG 2015\RS-613(REV01)

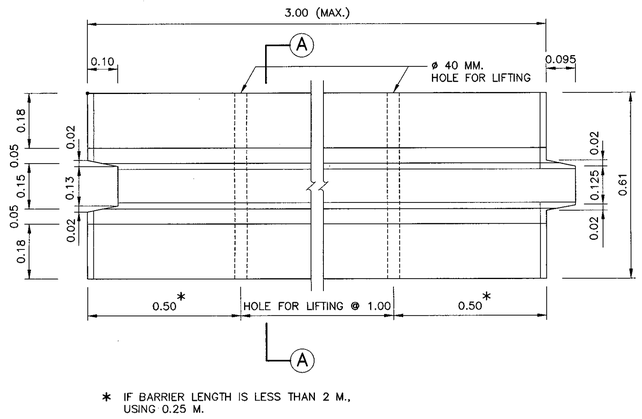

* IF BARRIER LENGTH IS LESS THAN 2 M., USING 0.25 M.

PLAN
SCALE 1 : 10

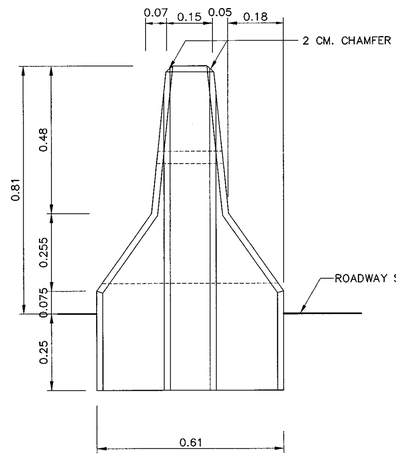

FRONT ELEVATION
SCALE 1 : 10

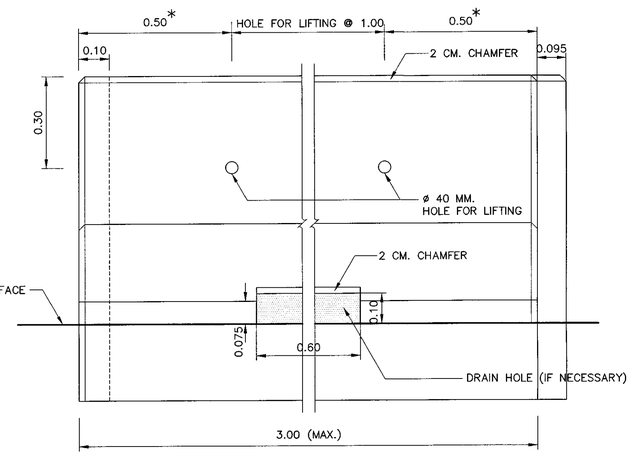

SIDE ELEVATION
SCALE 1 : 10

NOTES :

1. ALL DIMENSION ARE IN METERS UNLESS OTHERWISE INDICATED.
2. CONCRETE SHALL HAVE A MINIMUM ULTIMATE COMPRESSIVE STRENGTH OF 35 MPa. (357 KSC.) FOR 15x15x15 CM. CUBE AT 28 DAYS, CEMENT SHALL CONFORM TO TIS. 15 TYPE I PORTLAND CEMENT OR APPROVAL TYPE.
3. REINFORCING STEEL SHALL CONFORM TO TIS. 20 GRADE SR. 24 FOR ROUND BARS AND TIS. 24 GRADE SD 40 FOR DEFORMED BARS.
4. CLEAR CONCRETE COVER SHALL BE 5 CM.
5. STRUCTURAL STEEL SECTION SHALL CONFORM TO TIS. 528, PAINTED WITH RUSTPROOF RUST-OLEUM PAINT OR EQUIVALENT TWICE.
6. PRECAST CONCRETE BARRIER SHALL CONFORM TO ASTM C825-79 STANDARD SPECIFICATION FOR PRE-CAST CONCRETE BARRIER.
7. METHOD AND TYPE OF WELDING TO CONNECT EACH CONCRETE BARRIER SEGMENT WHICH STRONGER THAN THAT SHOW IN THIS DRAWING MAY BE USED AS APPROVED BY THE ENGINEER.
8. APPROACH CONCRETE BARRIER SHALL BE PAINTED IN BLACK AND WHITE STRIPE 0.50 M. WIDE, IN TWO COATS. THE PAINT SHALL CONFORM TO TIS. 327.
9. IF NECESSARY, DRAIN HOLE SIZE 0.60 M. WIDE, 0.10 M. HIGH SHALL BE APPLIED WITH 10.00 M. SPACING OR OTHER SPACING AS DIRECTED BY THE ENGINEER.
10. THE HOLE FOR LIFTING SHALL BE FILLED FULLY WITH NON-SHRINK MORTOR, THE OUTER FACE SHALL BE SMOOTH.
11. JOINTS SHALL BE DECORATED SMOOTHLY BY MORTAR RATIO 1:3 BY VOLUME.
12. APPROACH AND END CONCRETE BARRIER SEE DRAWING NO. RS-609.

REMARK :

THIS BARRIER IS SUITABLE ONLY IN SPECIFIC LOCATIONS AND CERTAIN CONDITIONS, IT SHOULD BE APPLIED WITH THE FIRM INFORMATIONS CONCERNED AND RECOMMENDED BY THE ENGINEER.

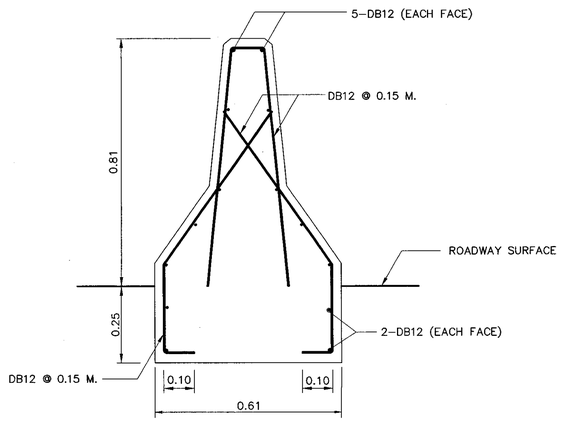

REINFORCEMENT DETAIL
SCALE 1 : 10

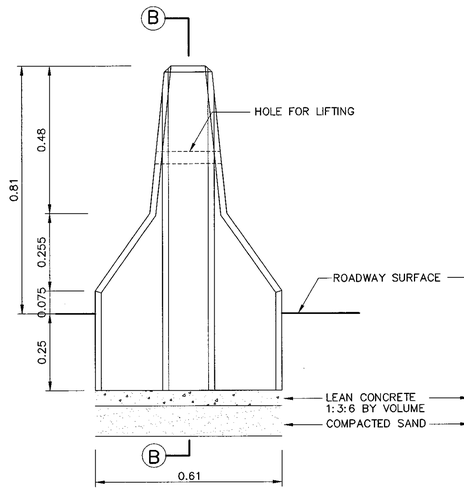

SECTION Ⓐ – Ⓐ

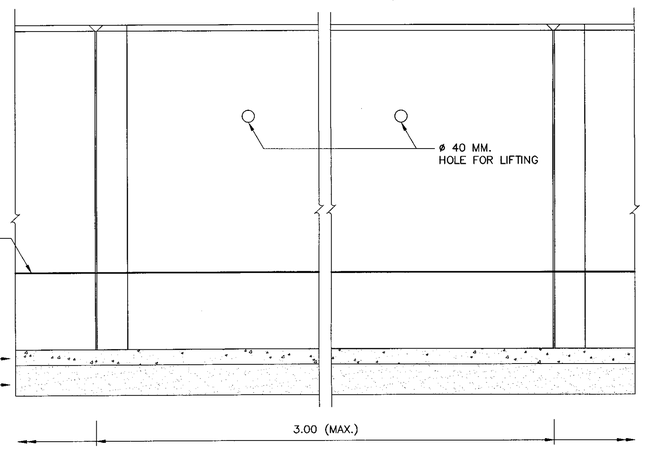

SECTION Ⓑ – Ⓑ

INSTALLATION
SCALE 1 : 10

KINGDOM OF THAILAND

MINISTRY OF TRANSPORT
DEPARTMENT OF HIGHWAYS

STANDARD DRAWING

CONCRETE BARRIER
PRE-CAST CONCRETE BARRIER TYPE IIB

DESIGNED : D.O.H. & CONSULTANTS	CHECKED : BUREAU OF LOCATION & DESIGN	DATE : OCT 2015
SUBMITTED : (DIRECTOR OF LOCATION & DESIGN BUREAU)		SCALE : AS SHOWN
APPROVED : (FOR DIRECTOR GENERAL)		DWG NO. RS-614
		SHEET NO. 87

REF.	REVISION	SIGNATURE	DATE

D:\std dwg 2015\RS-614(REV00)

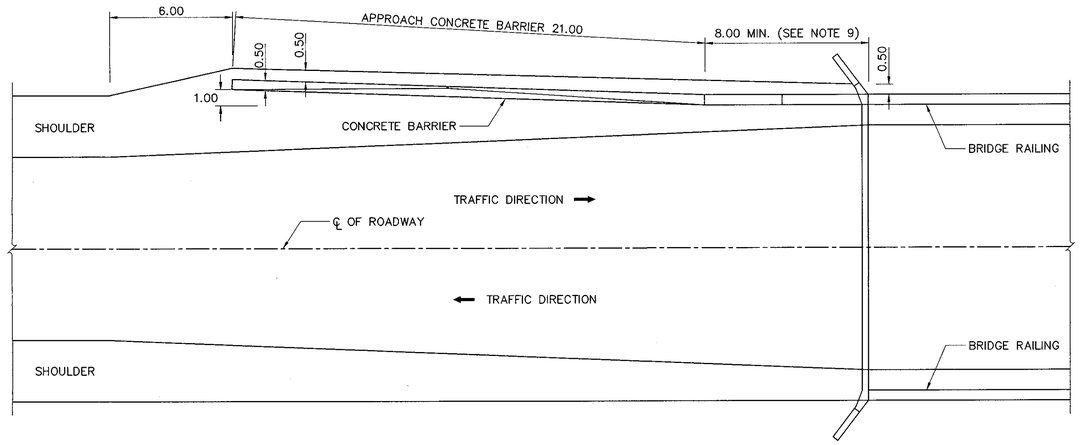

CONCRETE BARRIER AT BRIDGE APPROACH FOR TWO-WAY TRAFFIC

SCALE 1 : 150

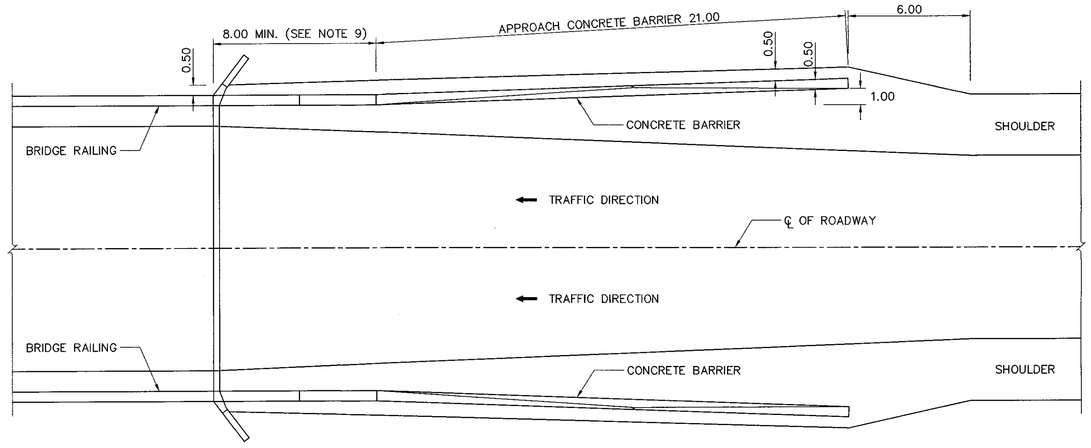

CONCRETE BARRIER AT BRIDGE APPROACH FOR DIVIDED HIGHWAY

SCALE 1 : 150

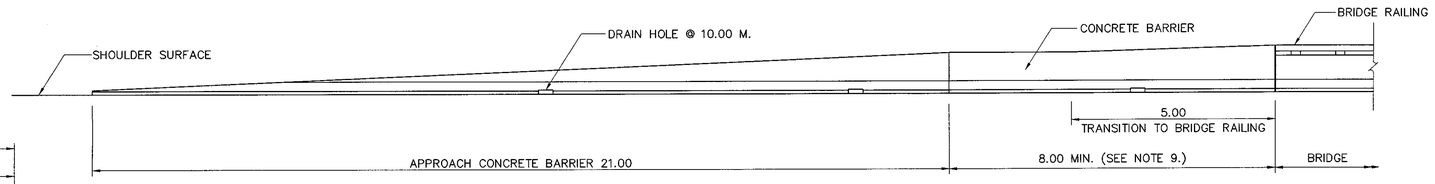

SIDE ELEVATION

SCALE 1 : 75

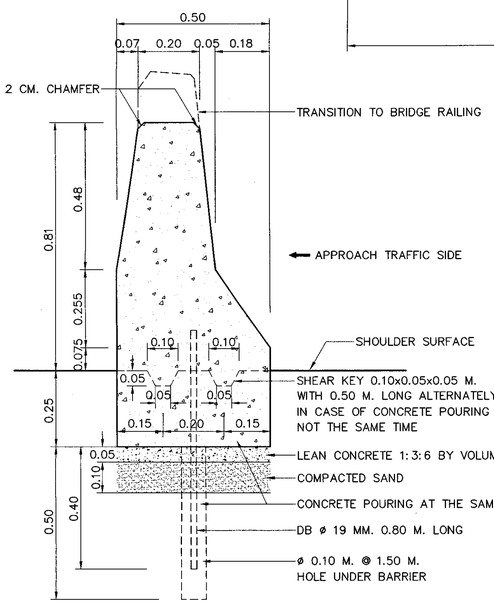

FRONT ELEVATION OF CONCRETE BARRIER

SCALE 1 : 10

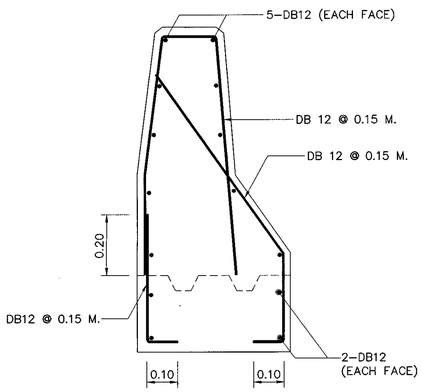

CONCRETE BARRIER REINFORCEMENT DETAIL

SCALE 1 : 10

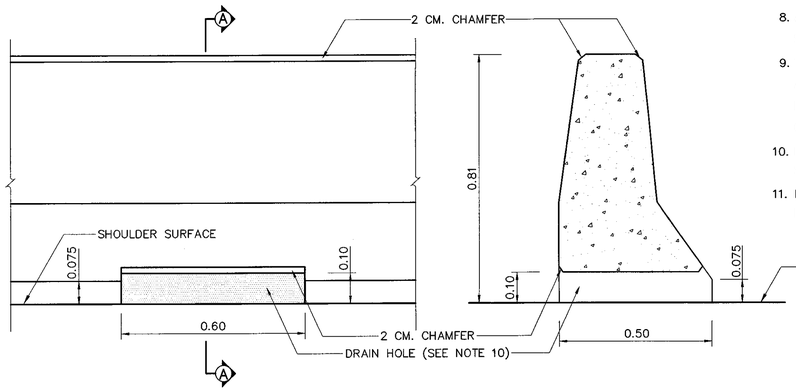

SIDE ELEVATION OF CONCRETE BARRIER

SCALE 1 : 10

SECTION Ⓐ – Ⓐ

SCALE 1 : 10

NOTES :

1. ALL DIMENSION ARE IN METERS UNLESS OTHERWISE INDICATED.
2. CONCRETE SHALL HAVE A MINIMUM ULTIMATE COMPRESSIVE STRENGTH OF 30 MPa. (306 KSC.) FOR 15x15x15 CM. CUBE AT 28 DAYS, CEMENT SHALL CONFORM TO TIS. 15 TYPE I PORTLAND CEMENT OR APPROVAL TYPE.
3. REINFORCING STEEL SHALL CONFORM TO TIS. 20 GRADE SR 24 FOR ROUND BARS AND TIS. 24 GRADE SD 40 FOR DEFORMED BARS.
4. CLEAR CONCRETE COVER SHALL BE 5 CM.
5. REINFORCEMENT AND OTHER DETAILS OF APPROACH CONCRETE BARRIER SHALL BE THE SAME AS CONCRETE BARRIER.
6. CONSTRUCTION JOINT SHALL BE PROVIDED AT 10.00 M. INTERVAL.
7. EXPANSION JOINT WITH NON-EXTRUDING JOINT FILLER SHALL BE PROVIDED AT 60.00 M. INTERVAL.
8. APPROACH CONCRETE BARRIER SHALL BE PAINTED IN BLACK AND WHITE STRIPE 0.50 M. WIDE, IN TWO COATS. THE PAINT SHALL CONFORM TO TIS. 327.
9. THE LENGTH SHALL BE BETWEEN BRIDGE ABUTMENT AND POSITION AT EMBANKMENT 2.50 M. HIGH, BUT NOT LESS THAN 8.00 M. IN CASE OF DEEP CUT AND HIGH FILL, DRAWING NO. RS-610 SHALL BE USED INSTEAD OF THIS DRAWING.
10. IF NECESSARY TO DRAINAGE THE DRAIN HOLES SHALL BE APPLIED WITH 10.00 M. SPACING, OR OTHER SPACING AS DIRECTED BY THE ENGINEER.
11. LENGTH OF APPROACH CONCRETE BARRIER FROM CURB AND GUTTER TO BRIDGE RAILING SHALL BE 18 M.

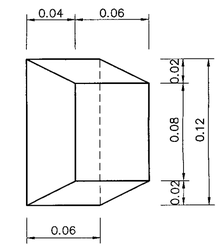

SHEAR KEY DETAIL

SCALE 1 : 2.5

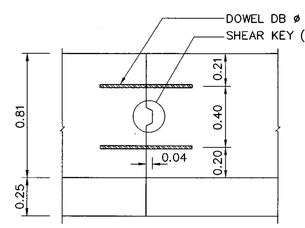

CONSTRUCTION JOINT DETAIL

SCALE 1 : 20

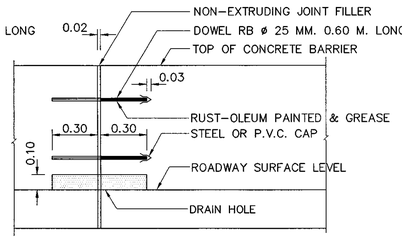

EXPANSION JOINT DETAIL

SCALE 1 : 20

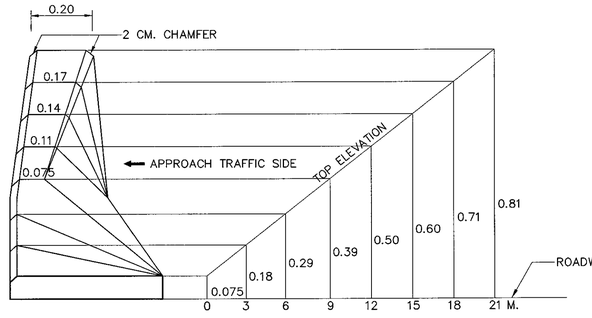

APPROACH CONCRETE BARRIER TYPE Ⓕ

SCALE 1 : 10

REMARK :

THIS BARRIER IS SUITABLE ONLY IN SPECIFIC LOCATIONS AND CERTAIN CONDITIONS, IT SHOULD BE APPLIED WITH THE FIRM INFORMATIONS CONCERNED AND RECOMMENDED BY THE ENGINEER.

REF.	REVISION	SIGNATURE	DATE

KINGDOM OF THAILAND

MINISTRY OF TRANSPORT

DEPARTMENT OF HIGHWAYS

STANDARD DRAWING

CONCRETE BARRIER

CONCRETE BARRIER AT BRIDGE APPROACH

DESIGNED : D.O.H. & CONSULTANTS	**CHECKED :** BUREAU OF LOCATION & DESIGN	**DATE :** OCT 2015
SUBMITTED : (DIRECTOR OF LOCATION & DESIGN BUREAU)		**SCALE :** AS SHOWN
APPROVED : (FOR DIRECTOR GENERAL)		**DWG NO.** RS-615
		SHEET NO. 88

D:\std dwg 2015\RS-615(REV00)

SECTION 4) DRAINAGE SYSTEMS

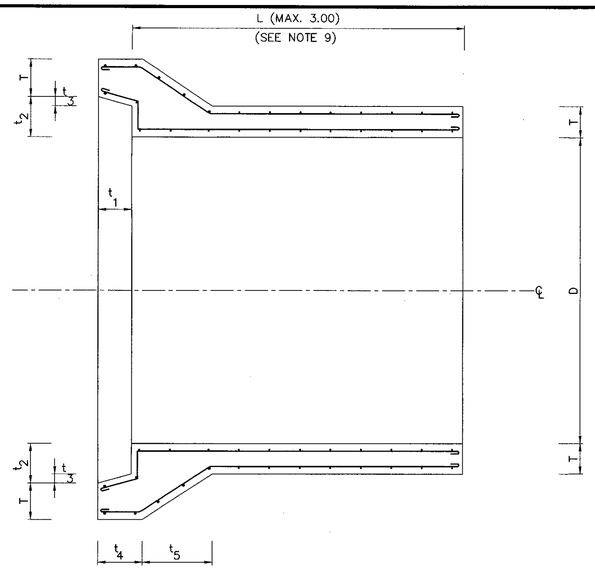

BELL AND SPIGOT TYPE

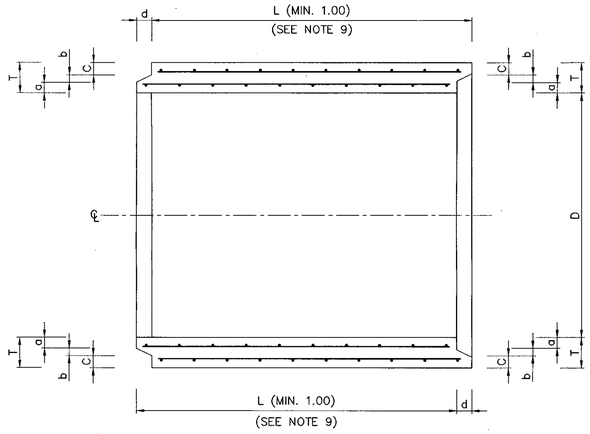

TONGUE AND GROOVE TYPE

DETAIL OF R.C. PIPE CULVERT
NOT TO SCALE

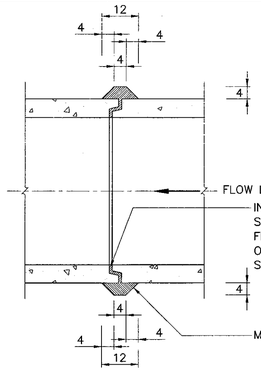

TONGUE AND GROOVE TYPE

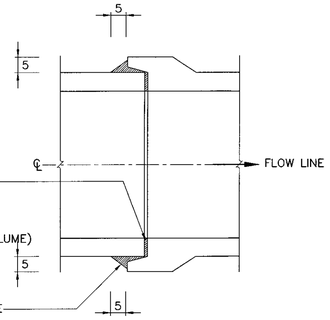

BELL AND SPIGOT TYPE

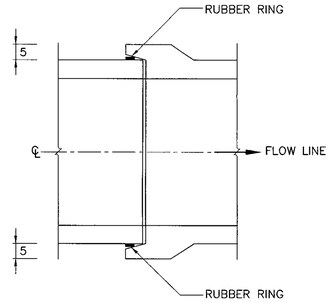

BELL AND SPIGOT TYPE
WITH RUBBER RING

PIPE CONNECTION DETAILS
NOT TO SCALE

TABLE 1 SPECIFICATION

R.C.PIPE CULVERT CLASS	INSIDE DIAMETER (D) (CM.)	WALL (T) (CM.)	MIN. CIRCULAR REINFORCEMENT (CM.²/M.)		CRUSHING LOAD TO PRODUCE 0.30 CM. CRACK WIDTH AND 30 CM. CRACK LENGTH (KG./M.)	MAXIMUM CRUSHING LOAD (KG./M.)	ULTIMATE COMPRESSIVE STRENGTH FOR 15x15x15 CM. CONCRETE CUBE AT 28 DAYS AGE MPa.(KSC.)	OVER FILL ON R.C. PIPE CULVERT NOT MORE THAN (METERS)
			INNER	OUTER				
2	30	5.0	1.5	–	3,060	4,590	35 (357)	10.0
	40	6.0	2.5	–	4,080	6,120		
	50	7.0	3.8	–	5,100	7,650		
	60	7.5	5.7	–	6,120	9,180		
	80	9.5	5.8	4.1	8,160	12,240		
	100	11.0	7.0	5.2	10,200	15,300		
	120	12.5	8.9	6.8	12,240	18,360		
	150	15.0	12.5	9.5	15,300	22,950	40 (408)	11.0
3	30	5.0	1.5	–	1,990	3,060	35 (357)	8.0
	40	6.0	1.5	–	2,650	4,080		
	50	7.0	1.5	–	3,320	5,100		
	60	7.5	1.5	–	3,980	6,120		
	80	9.5	4.0	–	5,300	8,160		
	100	11.0	4.2	3.2	6,630	10,200		
	120	12.5	5.1	3.8	7,960	12,240		
	150	15.0	7.2	5.5	9,950	15,300		

NOTES :

1. ALL DIMENSIONS ARE IN METERS UNLESS OTHERWISE INDICATED.
2. REINFORCED CONCRETE PIPE CULVERT CLASSES 2 AND 3 SHALL CONFORM TO TIS 128.
3. CEMENT , STEEL REINFORCEMENT , AGGREGATES AND TEST METHODS USED FOR R.C. PIPE CULVERT SHALL CONFORM TO THE REQUIREMENT OF TIS. 128 OR TO THE DEPARTMENT OF HIGHWAYS STANDARDS.
   - 3.1 CONCRETE COVER FOR SINGLE LAYER CIRCULAR REINFORCEMENT SHALL BE 0.35 TO 0.5 TIME OF WALL THICKNESS (MEASURED FROM INNER WALL)
   - 3.2 CONCRETE COVER FOR DOUBLE LAYERS CIRCULAR REINFORCEMENT SHALL BE 2.5 CM. IN AVERAGE BUT NOT LESS THAN 1.5 CM.
   - 3.3 LONGITUDINAL REINFORCEMENT SPACING FOR PIPE SIZE ø 50 CM. OR SMALLER SHALL BE A MINIMUM OF 4–ø 4 MM. BARS OR 8–ø 4 MM. BARS FOR PIPE ø 60 CM. OR LARGER.
   - 3.4 CIRCULAR REINFORCEMENT SPACING FOR PIPE SIZE ø 30 CM. TO ø 80 CM. SHALL BE 10 CM. OR LESS AND FOR PIPE SIZE ø 100 CM. TO ø 150 CM. SHALL BE 15 CM. OR LESS BUT NOT MORE THAN THEIR WALL THICKNESS.
4. THE CULVERT WHICH HAVING TRANSVERSE REINFORCEMENT IN ELLIPTICAL CAGE AS SPECIFIED IN THE TIS. 128 SHALL NOT BE USED.
5. PIPE MAY BE EITHER BELL AND SPIGOT TYPE OR TONGUE AND GROOVE TYPE AS DIRECTED BY THE ENGINEER.
6. CULVERT JOINTS SHALL BE MORTARED AS SHOWN ON THE DRAWING WITH CEMENT MORTAR (1:2 BY VOLUME)
7. CULVERT JOINTS WITH RUBBER RING SHALL BE USED WHEN INSTALLATION ON THE SOFT CLAY WITH CBR. ⩽ 2%
8. RUBBER RING SHALL CONFORM TO TIS. 237
9. CULVERT LENGTH (L) SHALL BE 1.00 M. UNLESS OTERWISE SPECIFIED.
10. REINFORCED CONCRETE PIPE CULVERT CLASS 2 SHALL BE USED UNDER PAVEMENT.
11. REINFORCED CONCRETE PIPE CULVERT CLASS 3 SHALL BE USED UNDER SIDEWALK.

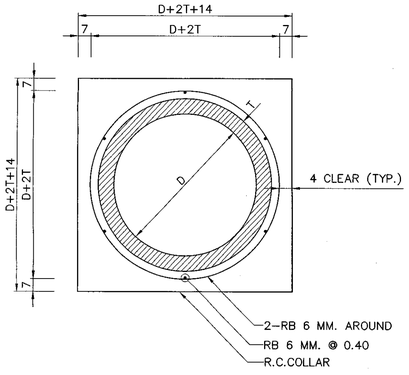

TRANSVERSE SECTION

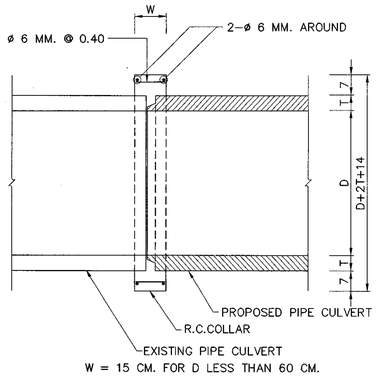

LONGITUDINAL SECTION

PIPE EXTENSION
NOT TO SCALE

TABLE 2 PIPE END DETAILS

R.C.PIPE CULVERT CLASS	INSIDE DIAMETER (D) (CM.)	WALL (T) (CM.)	PIPE END DETAILS (CM.)								
			BELL & SPIGOT TYPE					TONGUE & GROOVE TYPE			
			t_1	t_2	t_3	t_4	t_5 (MIN.)	a	b	c	d
2 & 3	30	5.0	6.0	6.6	0.4	8.5	15.0	1.9	0.8	2.3	3.0
	40	6.0	6.7	7.6	0.4	9.7	18.0	2.3	1.0	2.7	3.0
	50	7.0	7.0	8.6	0.4	10.5	21.0	2.8	1.0	3.2	4.0
	60	7.5	7.6	9.1	0.4	11.4	22.5	2.8	1.5	3.2	4.0
	80	9.5	8.9	11.1	0.4	13.7	28.5	3.8	1.5	4.2	4.5
	100	11.0	9.5	12.6	0.4	15.0	33.0	4.3	2.0	4.7	4.5
	120	12.5	10.1	14.1	0.4	16.5	37.5	4.8	2.5	5.2	5.0
	150	15.0	10.0	16.6	0.4	17.7	45.0	5.7	3.0	6.3	6.0

REF.	REVISION	SIGNATURE	DATE

KINGDOM OF THAILAND
MINISTRY OF TRANSPORT
DEPARTMENT OF HIGHWAYS

STANDARD DRAWING
R.C. PIPE CULVERT
DIMENSION AND REINFORCEMENT DETAILS

DESIGNED : D.O.H. & CONSULTANTS	CHECKED : BUREAU OF LOCATION & DESIGN	DATE : OCT 2015
SUBMITTED : (DIRECTOR OF LOCATION & DESIGN BUREAU)		SCALE : AS SHOWN
APPROVED : (FOR DIRECTOR GENERAL)		DWG NO. DS–101
		SHEET NO. 89

D:\std dwg 2015\DS-101(REV00)

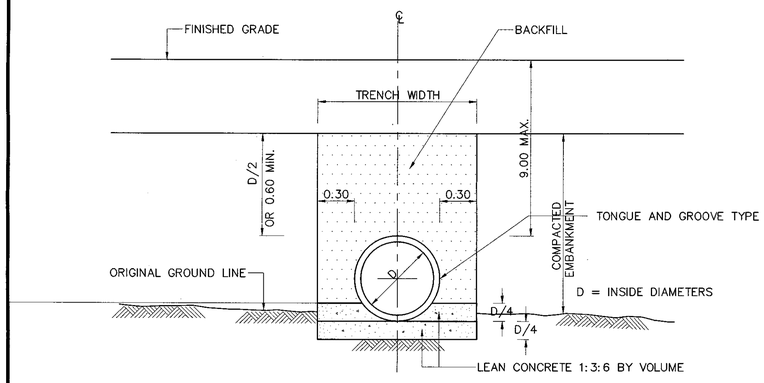

(a1) BEDDING FOR TONGUE AND GROOVE TYPE PIPE

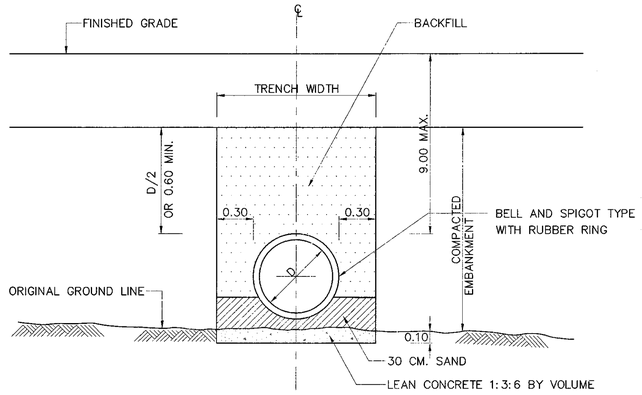

(a2) BEDDING FOR BELL AND SPIGOT TYPE PIPE

CASE I : SOFT SOIL FOUNDATION, CBR ⩽ 2%)

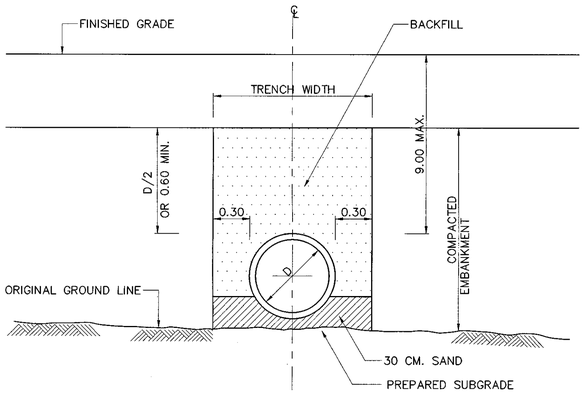

(b) ORDINARY BEDDING

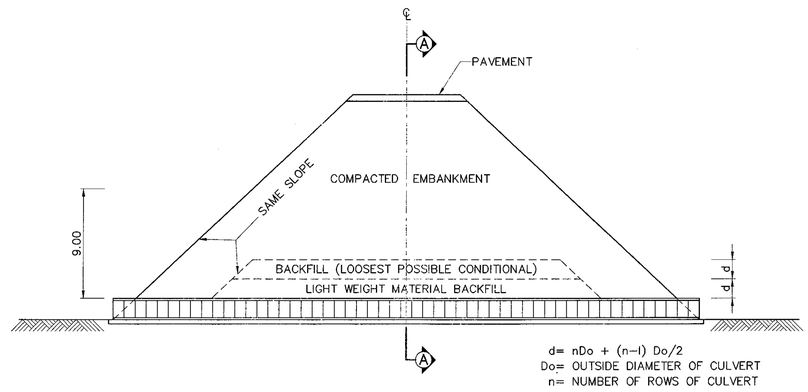

LONGITUDINAL SECTION

SCALE 1 : 250

CASE II : GENERAL SOFT FOUNDATION, CBR > 2%)

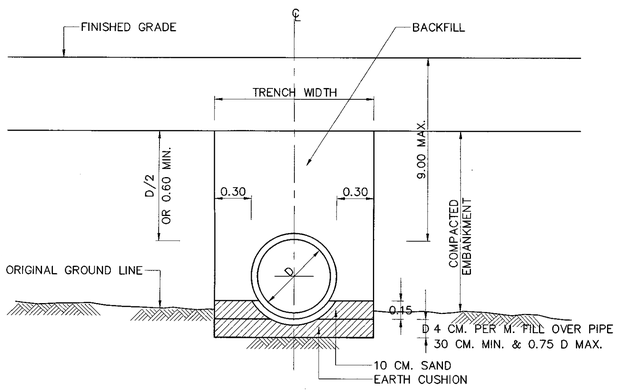

CASE III : ROCK OR UNYIELDING FOUNDATION

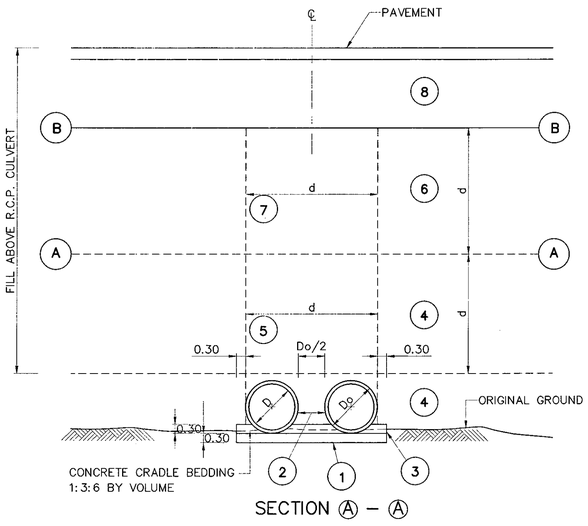

SECTION Ⓐ – Ⓐ

R.C. PIPE CULVERT INSTALLATION FILL ABOVE PIPE OVER 9.00 M.

NOT TO SCALE

R.C. PIPE CULVERT INSTALLATION BY TRENCH METHOD

NOT TO SCALE

NOTES :

REINFORCED CONCRETE CULVERT PIPE INSTALLATION (MAX. FILL HEIGHT 9.00 M.)

A.) CONSTRUCTION METHODS WHEN FILL HEIGHT IS LESS THAN 1.20 M.

1. THE PROJECTION METHODS SHALL BE USED FOR PIPE INSTALLATION.
2. THE PIPE LINE LAYOUT SHALL BE SUITABLE FOR THE TERRAIN. THE EXISTING GROUND ALONG THE LINE OF CULVERT SHALL BE PREPARED TO THE SPECIFIED SLOPE.
3. PIPE BEDDING SHALL BE TYPE (a),(b) OR (c) AS SHOWN ON THE DRAWING AND SHALL DEPEND UPON PREVAILING SOIL CONDITION AND THE JUDGEMENT OF THE ENGINEER.
4. AFTER THE PIPE HAS BEEN PLACED, THE SUBGRADE AND/OR PORTION OF PAVEMENT SECTION WHICH ARE TO BE LAID ALONG BOTH SIDES OF THE LINE WITH IN A DISTANCE OF 4 PIPE DIAMETERS BUT NOT LESS THAN 5.00 M. FROM CENTERLINE OF THE PIPE SHALL BE CONSTRUCED LIGHT WEIGHT CONSTRUCTION EQUIPMENT USED FOR COMPACTION SHALL OPERATE IN A DIRECTION PERPENDICULAR TO CENTERLINE OF ROADWAY OR PARALLEL TO PIPE LINE UNTIL THE BACKFILL HAS REACHED AN ELEVATION OF AT LEAST 30 CM. ABOVE THE TOP OF PIPE.

B.) CONSTRUCTION METHODS WHEN FILL HEIGHT EXCEEDS 1.20 M.

1. PIPE INSTALLATION SHALL BE BY TRENCH METHOD. SUBGRADE SHALL BE FIRST CONSTRUCTED TO AN ELEVATION D/2 OR AT LEAST 60 CM. OVER TOP OF PROPOSED PIPE. A TRENCH SHALL THEN BE EXCAVATED ALONG THE PROPOSED LINE AS SHOWN ON THE DRAWING. TRENCH WALLS SHALL HAVE A SMOOTH SURFACE AND SHALL BE CONSTRUCTED VERTICALLY.
2. THE TRENCH BED SHALL BE PREPARED TO THE SPECIFIED SLOPE BEDDING TYPE SHALL BE (a),(b) OR (c) DEPEDING ON FOUNDATION SOIL AN AS DIRECTED BY THE ENGINEER.
3. PIPE SHALL BE INSTALLED ACCORDING TO SIZES SHOWN ON THE DRAWING. BACKFILLING OF PIPE CULVERTS SHALL NOT BE PERMITTED UNTIL AT LEAST 48 HOURS HAVE ELAPSED AFTER JOINT HAVE BEEN COMPLETED.
4. BACKFILL SHALL BE PLACED TO THE SUBGRADE ELEVATION AS DESCRIBED IN NOTE 1. BACKFILL SHALL BE A SELECT MATERIAL AND SHALL REQUIRE THE APPROVAL OF THE ENGINEER. METHOD OF COMPACTION OF BACKFILL SHALL BE THE SAME AS REQUIRED FOR SUBGRADE. COMPACTION EQUIPMENT SHALL BE APPROVED BY THE ENGINEER.

REINFORCED CONCRETE CULVERT PIPE INSTALLATION (FILL HEIGHT OVER 9.00 M.)

1. AFTER EXISTING GROUND HAS BEEN PREPARED TO SPECIFIED SLOPE AND ELEVATION. CONCRETE BEDDING FOR PIPE SUPPORT SHALL BE PLACED AS SHOWN IN SECTION Ⓐ
2. THE NUMBER OF PIPE BARRELS AND SIZE OF PIPE CULVERT SHALL BE INSTALLED AS SHOWN.
3. A CONCRETE CRADLE SHALL THEN BE PLACED AS SHOWN IN SECTION Ⓐ
4. EMBANKMENT SHALL BE CONSTRUCTED WITH SELECTED MATERIAL AND COMPACTED IN ACCORDANCE WITH THE TYPICAL CROSS-SECTION FOR THE ROUTE. EMBANKMENT SHALL BE COMPACTED TO THE Ⓐ – Ⓐ LEVEL, "d" METERS ABOVE THE TOP OF PIPE WITH LIGHT WEIGHT COMPACTION EQUIPMENT. CONSTRUCTION PROCEDURES SHALL REQUIRE SUPERVISION BY THE ENGINEER.
5. A TRENCH SHALL BE EXCAVATED TO A WIDTH "d" METERS WITH VERTICAL, SMOOTH WALL AND BACKFILL WITH LIGHT WEIGHT MATERIAL OF A TYPE SPECIFIED BY THE ENGINEER.
6. A) WHEN FILL HEIGHT IS LESS THAN 18.00 M. THE CONSTRUCTION HAS REACHED THE Ⓐ – Ⓐ LEVEL AS DESCRIBED IN NOTE 4 & 5 ABOVE , FULL EMBANKMENT SHALL THE BE PLACED TO MEET THE FINISHED SUBGRADE LEVEL.
   B) WHEN FILL HEIGHT EXCEEDS 18.00 M., EMBANKMENT CONSTRUCTION SHALL CONTINUE AS DESCRIBED IN NOTE 4 ABOVE UNTIL THE Ⓑ – Ⓑ LEVEL IS REACHED.
7. A TRENCH SHALL THEN BE EXCAVATED AS DESCRIBED IN NOTE 5 ABOVE EXCEPT BACKFILL SHALL BE REGULAR BACKFILL MATERIAL AND SHALL BE PLACED AS LOOSELY AS POSSIBLE WITHOUT COMPACTION.
8. THE REMAINING EMBANKMENT SHALL THEN BE CONSTRUCTED TO SUBGRADE LEVEL AND COMPACTED BY METHODS NORMALLY USED.
9. ALL DIMENSIONS ARE IN METERS UNLESS OTHERWISE INDICATED.

REF.	REVISION	SIGNATURE	DATE

KINGDOM OF THAILAND
MINISTRY OF TRANSPORT
DEPARTMENT OF HIGHWAYS

STANDARD DRAWING
R.C. PIPE CULVERT
INSTALLATION DETAILS

DESIGNED : D.O.H. & CONSULTANTS	CHECKED : BUREAU OF LOCATION & DESIGN	DATE : OCT 2015
SUBMITTED : (DIRECTOR OF LOCATION & DESIGN BUREAU)		SCALE : AS SHOWN
APPROVED : (FOR DIRECTOR GENERAL)		DWG NO. DS-102
		SHEET NO. 90

D:\std dwg 2015\DS-102(REV00)

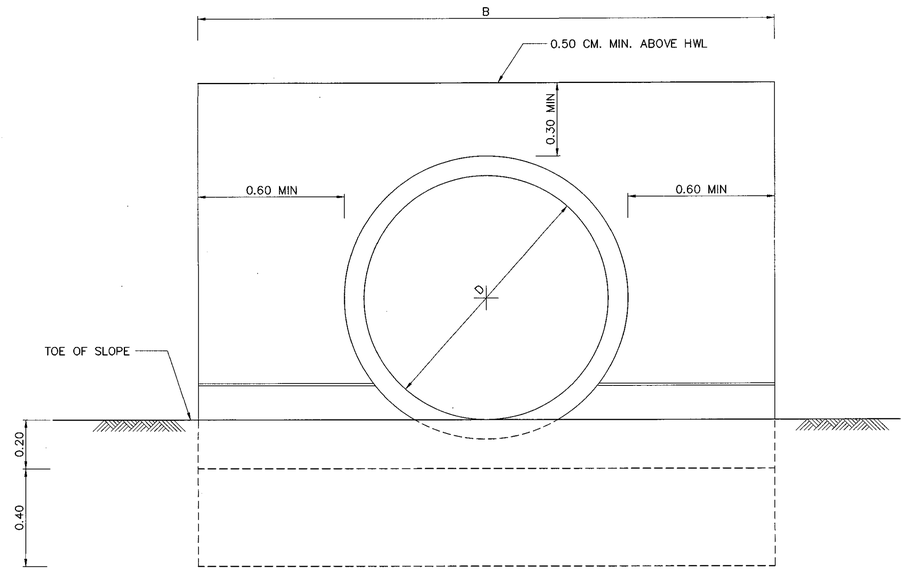

SINGLE PIPE
SCALE 1 : 12.5

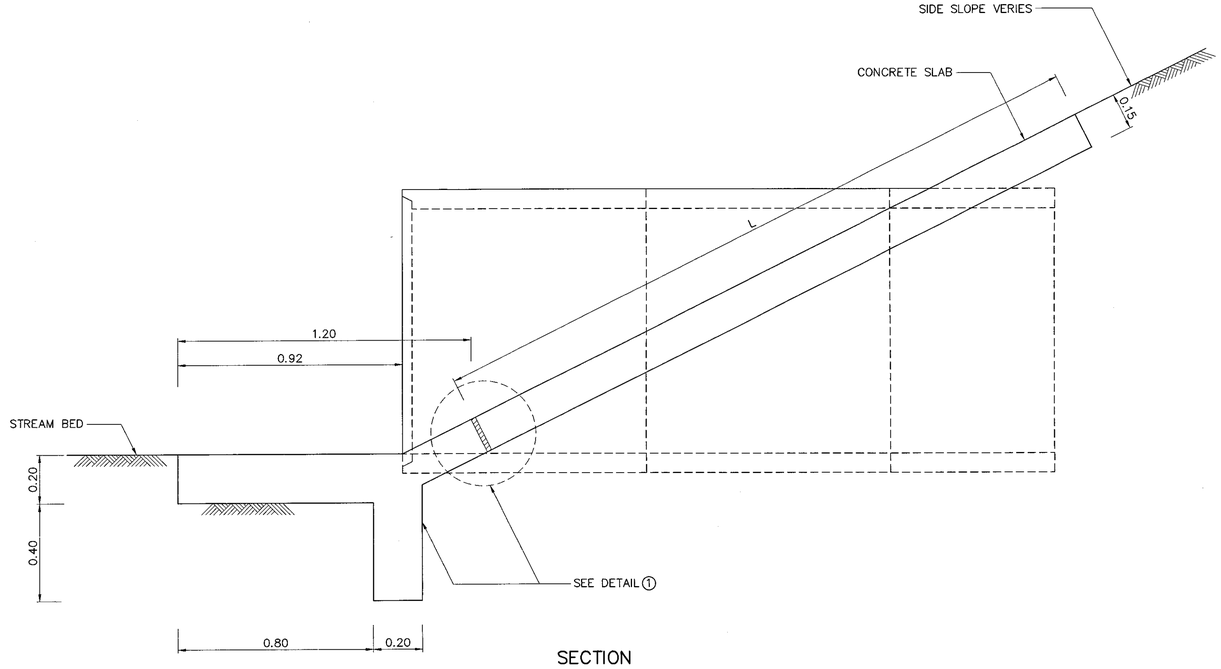

SECTION
SCALE 1 : 12.5

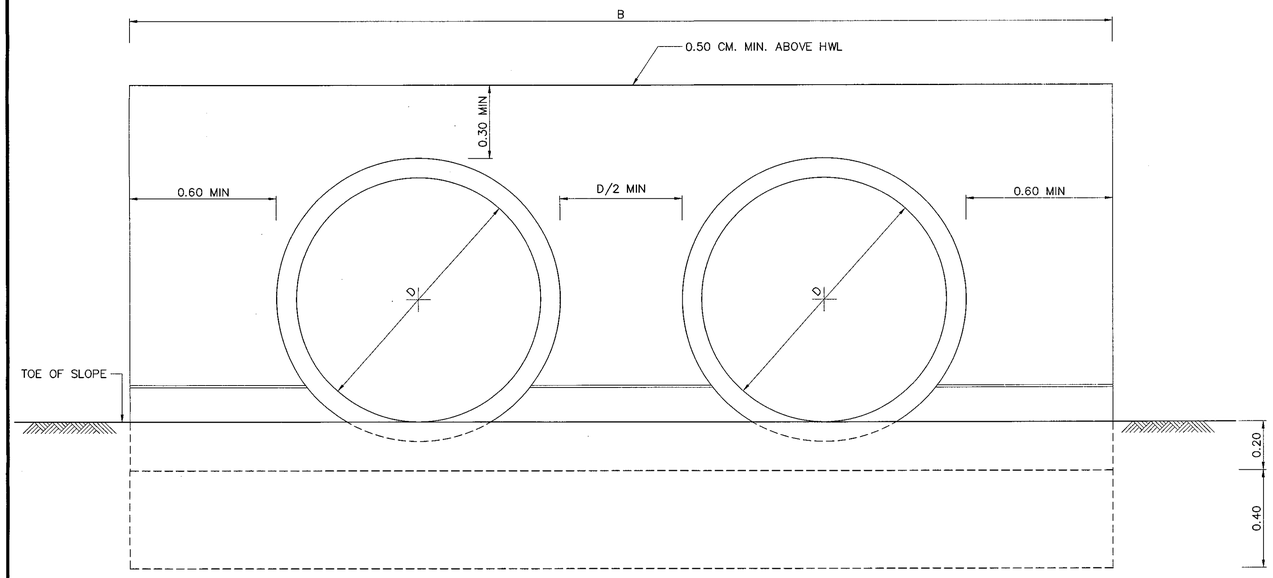

MULTIPLE PIPES
SCALE 1 : 12.5

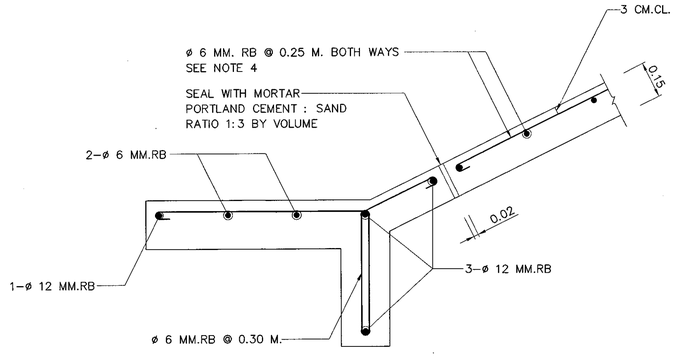

DETAIL ①
SCALE 1 : 12.5

NOTES :

1. ALL DIMENSIONES ARE IN METERS UNLESS OTHERWISE INDICATED.
2. CONCRETE SHALL HAVE A MINIMUM ULTIMATE COMPRESSIVE STRENGTH OF 18 MPa.(184 KSC.) FOR 15X15X15 CM. CUBE AT 28 DAYS. CEMENT SHALL CONFORM TO TIS. 15 TYPE I PORTLAND CEMENTOR APPROVAL TYPE.
3. REINFORCING STEEL SHALL CONFORM TO TIS.20 GRADE SR 24 FOR ROUND BARS.
4. STEEL REINFORCED IN CONCRETE SLAB SHALL BE REQUIRED ONLY WHEN (B x L) IS MORE THAN 9.00 SQ.M.
5. FOR ROLLING AND MOUNTAINOUS TERRAINS,THESE HEADWALLS SHALL BE USED AS NECESSARY AND DEPEND ON SURFACE RUNOFF CONDITIONS.

KINGDOM OF THAILAND

MINISTRY OF TRANSPORT
DEPARTMENT OF HIGHWAYS

STANDARD DRAWING

CONCRETE HEADWALL FOR R.C. PIPE CULVERT
END WALL TYPE

DESIGNED : D.O.H. & CONSULTANTS	**CHECKED :** BUREAU OF LOCATION & DESIGN	**DATE :** OCT 2015
SUBMITTED : (DIRECTOR OF LOCATION & DESIGN BUREAU)		**SCALE :** AS SHOWN
APPROVED : (FOR DIRECTOR GENERAL)		**DWG NO.** DS–103
		SHEET NO. 91

REF.	REVISION	SIGNATURE	DATE

D:\std dwg 2015\DS-103(REV00)

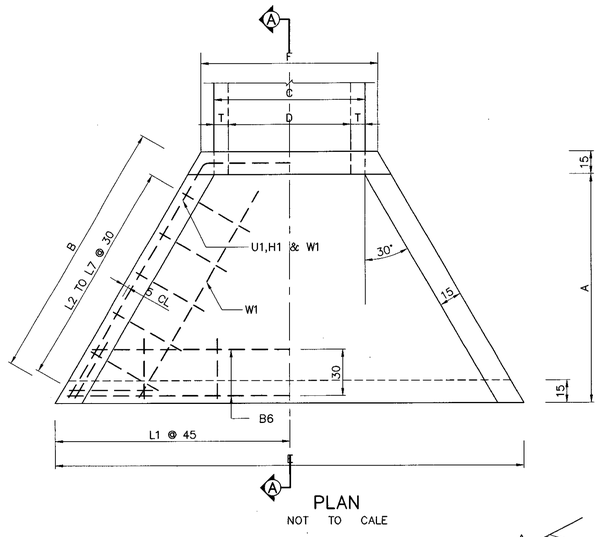

PLAN
NOT TO CALE

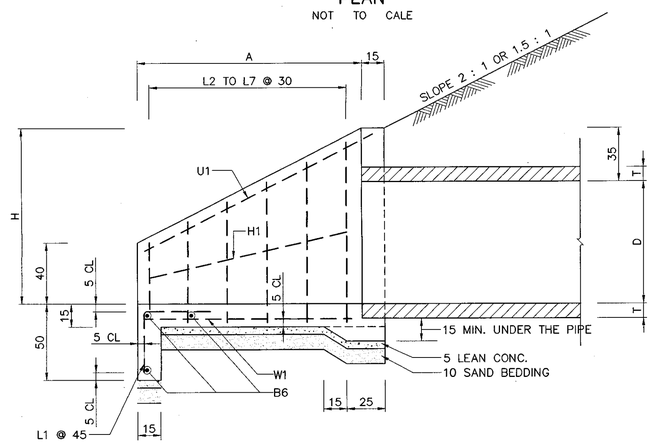

SECTION Ⓐ – Ⓐ
NOT TO SCALE

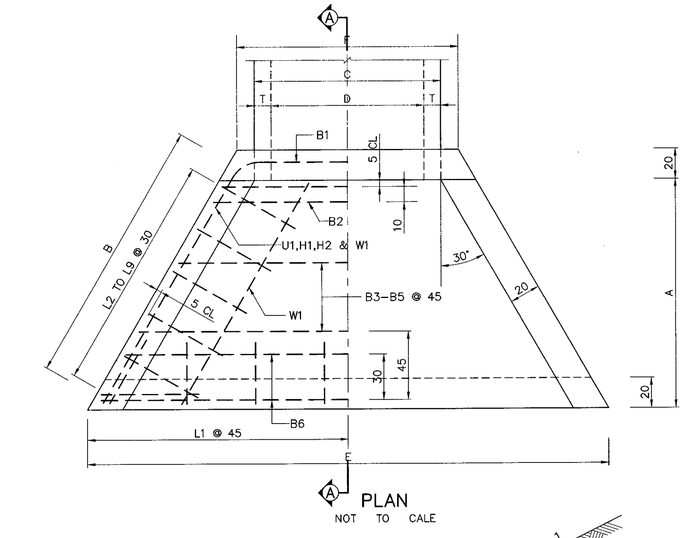

PLAN
NOT TO CALE

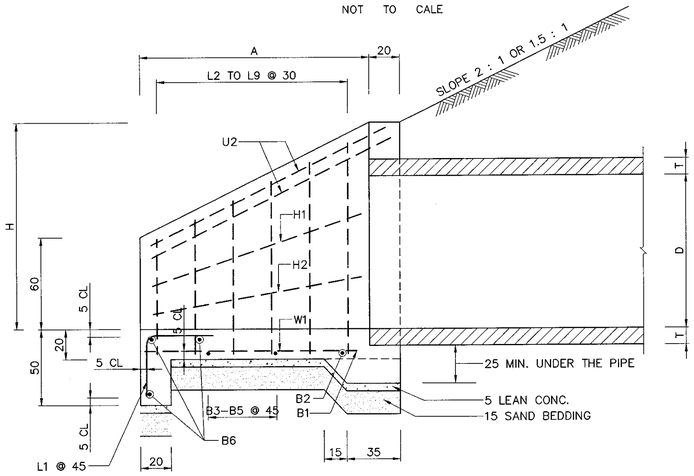

SECTION Ⓑ – Ⓑ
NOT TO SCALE

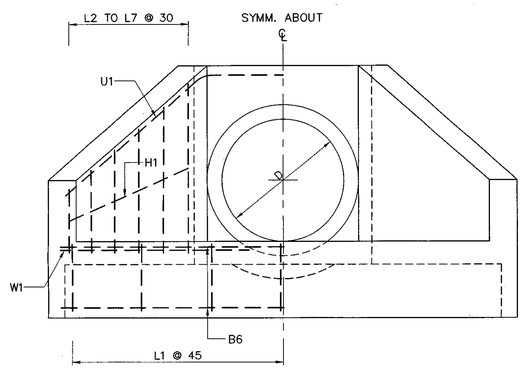

END VIEW

DETAILS FOR ø60 & ø80 PIPE CULVERTS
NOT TO SCALE

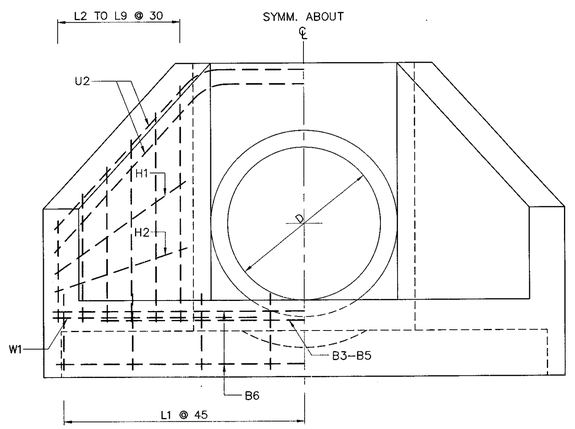

END VIEW

DETAILS FOR ø100 & ø120 PIPE CULVERTS
NOT TO SCALE

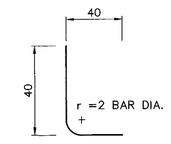

L1

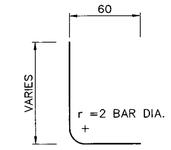

L2 TO L9

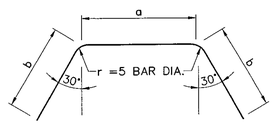

U1 & U2

BAR BENDING DIAGRAMS
NOT TO SCALE

TABLE OF REINFORCEMENT

BAR MARK	SIZE ø (MM.)	D=60 NO.	D=60 LENGTH	D=80 NO.	D=80 LENGTH	D=100 NO.	D=100 LENGTH	D=120 NO.	D=120 LENGTH
U1	12	1	374	1	498	–	–	–	–
U2	16	–	–	–	–	2	535	2	658
L1	12	8	80	8	80	8	80	10	80
L2	16(12)	2	107	2	107	2	132	2	132
L3	16(12)	2	120	2	120	2	145	2	145
L4	16(12)	2	133	2	133	2	158	2	158
L5	16(12)	2	146	2	146	2	171	2	171
L6	16(12)	2	159	2	159	2	184	2	184
L7	16(12)	2	–	2	172	2	197	2	197
L8	16	–	–	–	–	–	–	2	120
L9	16	–	–	–	–	–	–	2	225
W1	12	4	119	4	165	4	165	4	211
B1	16	–	–	–	–	1	162	1	185
B2	16	–	–	–	–	1	174	1	197
B3	12	–	–	–	–	1	220	1	242
B4	12	–	–	–	–	1	272	1	294
B5	12	–	–	–	–	–	–	1	346
B6	12	3	–	3	–	3	–	3	–
H1	12	2	122	2	169	2	181	2	225
H2	12	–	–	–	–	2	177	2	223
REINF. (KG.)		32		41		84		111	
CONC. (M^3)		0.8		1.2		2.0		2.8	

NOTE: FOR ø60 & ø 80 PIPE CULVERTS,L2–L7 SHALL BE ø12 MM. REBARS

TABLE OF DIMENSION

DIA. OF PIPE "D"	WALL THICKNESS T	DIMENSIONS A S=2:1	A S=1.5:1	B	C	E	F	H	a	b
60	7.5	110	90	127	75	237	92	95	88	143
80	9.5	150	120	173	99	307	116	115	112	193
100	11	150	120	173	122	341	145	135	143	196
120	12.5	190	150	219	145	411	168	155	166	246

NOTE :

1. ALL DIMENSIONS ARE IN CENTIMETERS UNLESS OTHERWISE INDICATED.
2. CONCRETE SHALL HAVE A MINIMUM ULTIMATE COMPRESSIVE STRENGTH OF 20 MPa.(204 KSC.) FOR 15x15x15 CM. CUBE AT 28 DAYS, CEMENT SHALL CONFORM TO TIS. 15 TYPE I PORTLAND CEMENTOR APPROVAL TYPE.
3. REINFORCING STEEL SHALL CONFORM TO TIS.20 GRADE SR 24 FOR ROUND BARS AND TIS. 24 GRADE SD 40 FOR DEFORMED BARS.
4. CLEAR CONCRETE COVER SHALL BE 4 CM. UNLESS OTHERWISE INDICATED.
5. LOCATIONS OF LAP SPLICE OF REBARS SHALL BE APPROVED BY THE ENGINEER.
6. LAP LENGTH SHALL NOT BE LESS THAN 24 BAR DIAMETERS.
7. ALL CONCRETE EXPOSED CORNERS SHALL HAVE 2 CM. CHAMFERS UNLESS OTHERWISE INDICATED.
8. DIMENSIONS OF HEADWALL AND QUANTITIES OF MATERIAL SHOWN IN THE TABLES ARE FOR EMBANKMENT SLOPE OF 2:1 ONLY FOR EMBANKMENT SLOPE 1.5:1, ALL DIMENSION SHALL BE WORKED OUT FROM DIMENSION OF "A" AS SHOWN TOGETHER WITH THE FLARE ANGLE OF 30° AND THEN QUANTITIES OF MATERIALS SHALL BE CHANGED ACCORDINGLY.
9. UNLESS OTHERWISE SPECIFILED, THESE HEADWALLS SHALL BE USED FOR HIGHWAYS CLASS D AND CLASS 1.
10. FOR ROLLING AND MOUNTAINOUS TERRAINS,THESE HEADWALLS SHALL BE USED AS NECESSARY AND DEPEND ON SURFACE RUNOFF CONDITIONS.

KINGDOM OF THAILAND

MINISTRY OF TRANSPORT
DEPARTMENT OF HIGHWAYS

STANDARD DRAWING

CONCRETE HEADWALL FOR R.C. PIPE CULVERT
WING WALL TYPE FOR SINGLE CULVERT

DESIGNED : D.O.H. & CONSULTANTS	CHECKED : BUREAU OF LOCATION & DESIGN		DATE : OCT 2015
SUBMITTED : (DIRECTOR OF LOCATION & DESIGN BUREAU)			SCALE : AS SHOWN
APPROVED : (FOR DIRECTOR GENERAL)			DWG NO. DS–104
			SHEET NO. 92

REF.	REVISION	SIGNATURE	DATE

D:\std dwg 2015\DS-104(REV00)

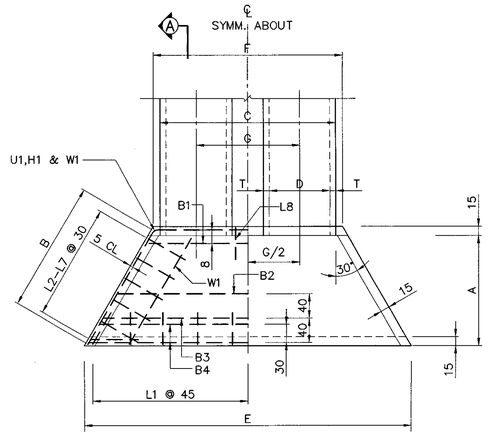

PLAN

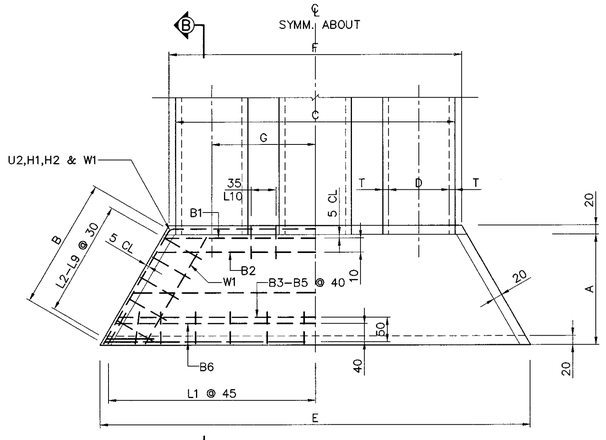

PLAN

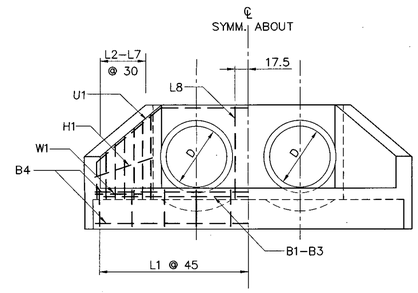

END VIEW

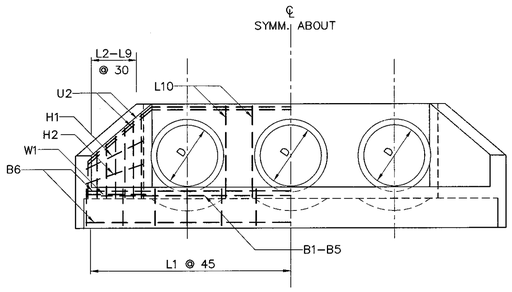

END VIEW

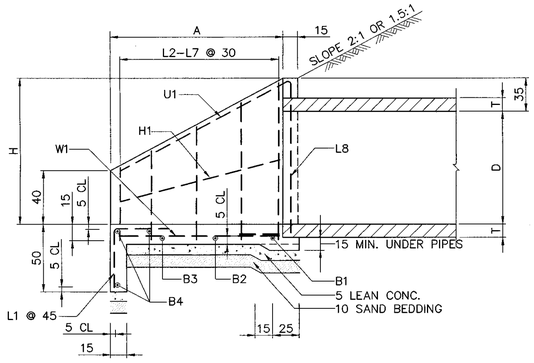

SECTION 'A'

DETAILS FOR ø60 & ø80 PIPE CULVERTS

NOT TO SCALE

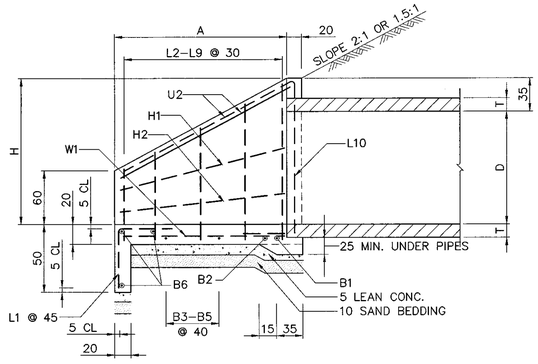

SECTION 'B'

DETAILS FOR ø100 & ø120 PIPE CULVERTS

NOT TO SCALE

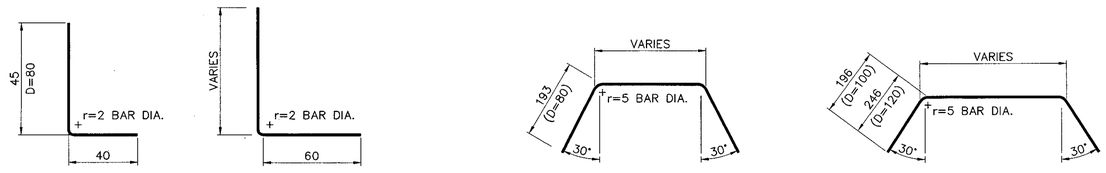

BAR BENDING DIAGRAMS

NOT TO SCALE

TABLE OF REINFORCEMENT

BAR MARK	SIZE ø (mm.)	FOR ø60, ø80, ø100, & ø120 CM.													
		FOR 2 PIPES								FOR 3 PIPES					
		D = 60		D = 80		D = 100		D = 120		D = 60		D = 80		D = 100		D = 120	
		NO.	LENGTH	NO.	LENGTH	NO.	LENGTH	NO.	LENGTH	NO.	LENGTH	NO.	LENGTH	NO.	LENGTH	NO.	LENGTH
B1	12	1	223	1	267	1	332	1	375	1	345	1	407	1	502	1	565
B2	12	1	246	1	336	1	344	1	387	1	366	1	476	1	514	1	577
B3	12	1	292	1	382	1	351	1	440	1	412	1	552	1	521	1	630
B4	12	3	–	3	–	1	398	1	487	3	–	3	–	1	568	1	677
B5	12	–	–	–	–	1	444	1	533	–	–	–	–	1	614	1	723
B6	12	–	–	–	–	3	–	3	–	–	–	–	–	3	–	3	–
H1	12	–	–	–	–	2	177	2	223	–	–	–	–	2	177	2	223
H2	12	–	–	–	–	2	181	2	235	–	–	–	–	2	181	2	235
L1	12	9	85	11	85	12	105	14	105	11	85	14	85	16	105	18	105
L2	16(12)	10	–	12	–	2	132	2	132	10	–	12	–	2	132	2	132
L3	16(12)	10	–	12	–	2	145	2	145	10	–	12	–	2	145	2	145
L4	16(12)	10	–	12	–	2	158	2	158	10	–	12	–	2	158	2	158
L5	16(12)	10	–	12	–	2	171	2	171	10	–	12	–	2	171	2	171
L6	16(12)	10	–	12	–	2	186	2	186	10	–	12	–	2	186	2	186
L7	16(12)	10	–	12	–	2	197	2	197	10	–	12	–	2	197	2	197
L8	16(12)	2	160	2	180	–	–	2	210	4	180	4	160	–	–	2	210
L9	16	–	–	–	–	–	–	2	225	–	–	–	–	–	–	2	225
L10	16	–	–	–	–	2	205	2	225	–	–	–	–	4	205	4	225
U1	12	1	494	1	638	–	–	–	–	1	778	1	614	–	–	–	–
U2	16	–	–	–	–	2	705	2	444	–	–	–	–	2	475	2	1038
H1	12	2	122	2	169	–	–	–	–	2	169	2	122	–	–	–	–
W1	12	4	119	4	165	4	165	4	211	4	165	4	119	4	165	4	211

NOTE: FOR ø 60 , ø 80 PIPE CULVERTS,L2–L8 SHALL BE ø12 MM. REBARS

TABLE OF DIMENSIONS

DIA. OF PIPE "D"	T	DIMENSIONS SAME FOR ALL MULTIPLES					DIMENSIONS					
		A		B	H	G	FOR 2 PIPES			FOR 3 PIPES		
		S=2:1	S=1.5:1				C	E	F	C	E	F
60	7.5	110	90	127	95	120	195	357	212	315	477	332
80	9.5	150	120	173	115	140	239	447	256	379	587	396
100	11.0	150	120	173	135	170	292	511	315	462	681	485
120	12.5	190	150	219	155	190	335	601	358	525	781	548

TABLE OF QUANTITIES

DIA. OF PIPE "D"	T	CONCRETE^3 (1–HDWL) M		REINF. BARS, TOTAL WT. (1–HDWL) KG	
		FOR 2 PIPES	FOR 3 PIPES	FOR 2 PIPES	FOR 3 PIPES
60	7.5	1.2	1.6	50	63
80	9.5	1.8	2.3	64	79
100	11.0	3.0	4.0	121	151
120	12.5	4.0	5.3	141	175

NOTES

1. ALL DIMENSIONS ARE IN CENTIMETERS UNLESS OTHERWISE INDICATED.
2. CONCRETE SHALL HAVE A MINIMUM ULTIMATE COMPRESSIVE STRENGTH OF 20 MPa.(204 KSC.) FOR 15x15x15 CM. CUBE AT 28 DAYS, CEMENT SHALL CONFORM TO TIS. 15 TYPE I PORTLAND CEMENTOR APPROVAL TYPE.
3. REINFORCING STEEL SHALL CONFORM TO TIS.20 GRADE SR 24 FOR ROUND BARS AND TIS. 24 GRADE SD 40 FOR DEFORMED BARS.
4. CLEAR CONCRETE COVER SHALL BE 4 CM. UNLESS OTHERWISE INDICATED.
5. LOCATIONS OF LAP SPLICE OF REBARS SHALL BE APPROVED BY THE ENGINEER.
6. LAP LENGTH SHALL NOT BE LESS THAN 24 BAR DIAMETERS.
7. ALL CONCRETE EXPOSED CORNERS SHALL HAVE 2 CM. CHAMFERS UNLESS OTHERWISE INDICATED.
8. DIMENSIONS OF HEADWALL AND QUANTITIES OF MATERIAL SHOWN IN THE TABLES ARE FOR EMBANKMENT SLOPE OF 2:1 ONLY FOR EMBANKMENT SLOPE 1.5:1, ALL DIMENSION SHALL BE WORKED OUT FROM DIMENSION OF "A" AS SHOWN TOGETHER WITH THE FLARE ANGLE OF 30° AND THEN QUANTITIES OF MATERIALS SHALL BE CHANGED ACCORDINGLY.
9. UNLESS OTHERWISE SPECIFILED, THESE HEADWALLS SHALL BE USED FOR HIGHWAYS CLASS D AND CLASS 1.
10. FOR ROLLING AND MOUNTAINOUS TERRAINS,THESE HEADWALLS SHALL BE USED AS NECESSARY AND DEPEND ON SURFACE RUNOFF CONDITIONS.

REF.	REVISION	SIGNATURE	DATE

KINGDOM OF THAILAND

MINISTRY OF TRANSPORT

DEPARTMENT OF HIGHWAYS

STANDARD DRAWING

CONCRETE HEADWALL FOR R.C. PIPE CULVERT WING WALL TYPE FOR MULTIPLE CULVERTS

DESIGNED : D.O.H. & CONSULTANTS	**CHECKED :** BUREAU OF LOCATION & DESIGN	**DATE :** OCT 2015
SUBMITTED : (DIRECTOR OF LOCATION & DESIGN BUREAU)		**SCALE :** AS SHOWN
APPROVED : (FOR DIRECTOR GENERAL)		**DWG NO.** DS–105
		SHEET NO. 93

D:\std dwg 2015\DS-105(REV00)

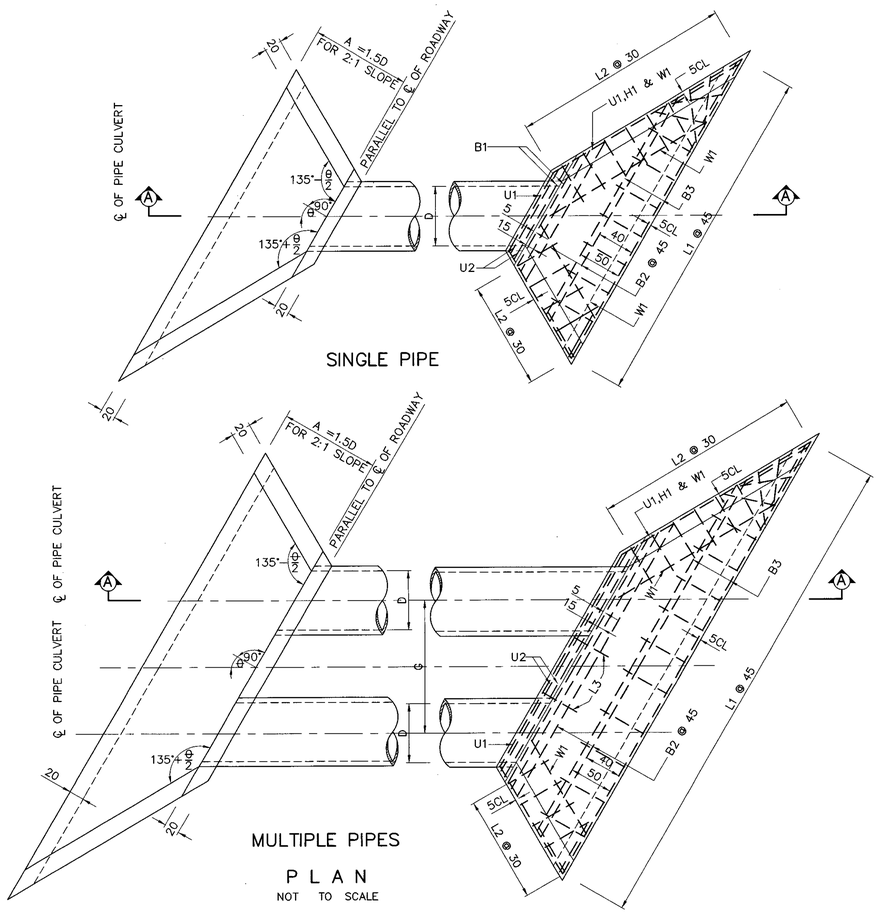

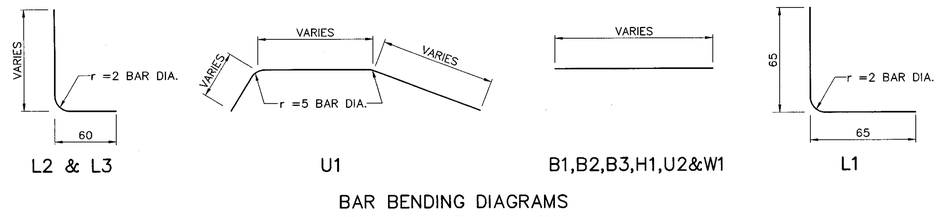

BAR BENDING DIAGRAMS
NOT TO SCALE

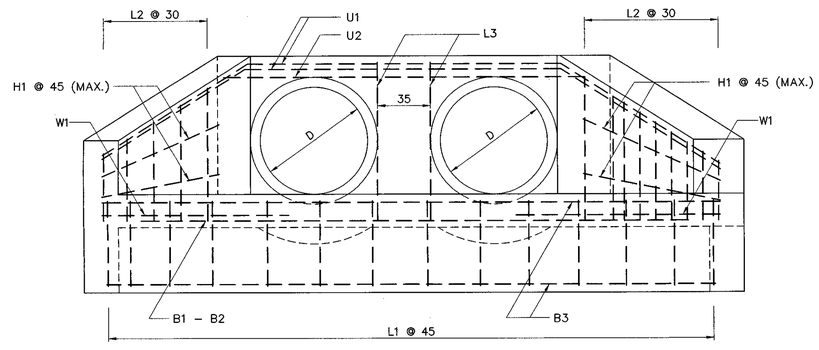

MULTIPLE PIPES

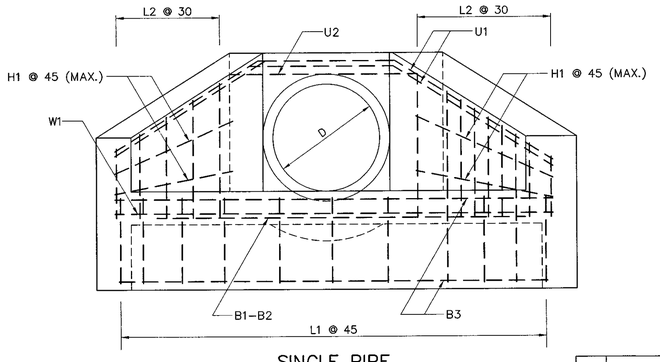

SINGLE PIPE

END VIEWS
NOT TO SCALE

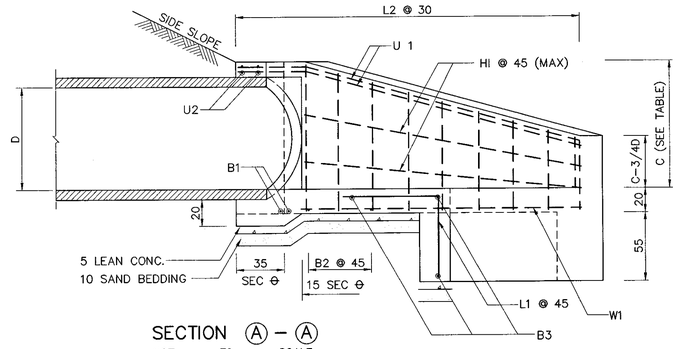

SECTION Ⓐ – Ⓐ
NOT TO SCALE

TABLE OF REINFORCEMENT
FOR D = 80 CM.

BAR MARK	SIZE ø (mm.)	@	FOR 1 PIPES						FOR 2 PIPES						FOR 3 PIPES					
			SKEW15°		SKEW30°		SKEW45°		SKEW15°		SKEW30°		SKEW45°		SKEW15°		SKEW30°		SKEW45°	
			NO.	L	NO.	L	NO.	L	NO.	L	NO.	L	NO.	L	NO.	L	NO.	L	NO.	L
B1	16	–	2	–	2	–	2	–	2	–	2	–	2	–	2	–	2	–	2	–
B2	16	45	2	–	2	–	2	–	2	–	2	–	2	–	2	–	2	–	2	–
B3	16	–	3	–	2	–	2	–	2	–	2	–	2	–	2	–	2	–	2	–
H1	12	–	4	–	4	–	4	–	4	–	4	–	4	–	4	–	4	–	4	–
L1	12	45	9	130	11	130	13	130	12	130	14	130	16	130	15	130	18	130	20	130
L2	16	30	13	–	14	–	16	–	13	–	14	–	16	–	13	–	14	–	16	–
L3	16	–	–	–	–	–	–	–	2	113	2	113	2	113	4	113	4	113	4	113
U1	16	–	2	488	2	144	2	175	2	275	2	306	2	373	2	420	2	468	2	571
U2	16	–	2	130	2	531	2	622	2	633	2	693	2	820	2	778	2	855	2	1018
W1	12	–	4	–	4	–	4	–	4	–	4	–	4	–	4	–	4	–	4	–
CONC.(M^3)			1.74		1.93		2.29		2.45		2.72		3.26		3.16		3.51		4.23	
REINF.(KG)			99		108		127		129		145		169		159		181		211	

TABLE OF REINFORCEMENT
FOR D = 100 CM.

BAR MARK	SIZE ø (mm.)	@	FOR 1 PIPES						FOR 2 PIPES						FOR 3 PIPES					
			SKEW15°		SKEW30°		SKEW45°		SKEW15°		SKEW30°		SKEW45°		SKEW15°		SKEW30°		SKEW45°	
			NO.	L	NO.	L	NO.	L	NO.	L	NO.	L	NO.	L	NO.	L	NO.	L	NO.	L
B1	16	–	2	–	2	–	2	–	2	–	2	–	2	–	2	–	2	–	2	–
B2	16	45	2	–	2	–	2	–	2	–	2	–	2	–	2	–	2	–	2	–
B3	16	–	3	–	2	–	2	–	2	–	2	–	2	–	2	–	2	–	2	–
H1	12	–	4	–	4	–	4	–	4	–	4	–	4	–	4	–	4	–	4	–
L1	12	45	11	130	12	130	14	130	15	130	16	130	19	130	19	130	20	130	24	130
L2	16	30	16	–	16	–	20	–	16	–	16	–	20	–	16	–	16	–	20	–
L3	16	–	–	–	–	–	–	–	2	135	2	135	2	135	4	135	4	135	4	135
U1	16	–	2	574	2	648	2	761	2	744	2	837	2	993	2	914	2	1026	2	1225
U2	16	–	2	120	2	166	2	206	2	290	2	355	2	438	2	460	2	544	2	670
W1	12	–	4	–	4	–	4	–	4	–	4	–	4	–	4	–	4	–	4	–
CONC.(M^3)			2.49		2.70		3.23		3.45		3.76		4.53		4.41		4.82		5.83	
REINF.(KG)			124		134		163		162		175		214		199		216		266	

TABLE OF REINFORCEMENT
FOR D = 120 CM.

BAR MARK	SIZE ø (mm.)	@	FOR 1 PIPES						FOR 2 PIPES						FOR 3 PIPES					
			SKEW15°		SKEW30°		SKEW45°		SKEW15°		SKEW30°		SKEW45°		SKEW15°		SKEW30°		SKEW45°	
			NO.	L	NO.	L	NO.	L	NO.	L	NO.	L	NO.	L	NO.	L	NO.	L	NO.	L
B1	16	–	2	–	2	–	2	–	2	–	2	–	2	–	2	–	2	–	2	–
B2	16	45	3	–	3	–	3	–	3	–	3	–	3	–	3	–	3	–	3	–
B3	16	–	3	–	2	–	2	–	2	–	2	–	2	–	2	–	2	–	2	–
H1	12	–	6	–	6	–	6	–	6	–	6	–	6	–	6	–	6	–	6	–
L1	12	45	13	130	14	130	17	130	17	130	19	130	23	130	21	130	24	130	29	130
L2	16	30	18	–	19	–	23	–	18	–	19	–	23	–	18	–	19	–	23	–
L3	16	–	–	–	–	–	–	–	2	158	2	158	2	158	4	158	4	158	4	158
U1	16	–	2	721	2	783	2	919	2	918	2	1002	2	1188	2	1115	2	1221	2	1457
U2	16	–	2	179	2	200	2	244	2	376	2	419	2	513	2	573	2	638	2	782
W1	12	–	4	–	4	–	4	–	4	–	4	–	4	–	4	–	4	–	4	–
CONC.(M^3)			3.34		3.66		4.38		4.58		5.04		6.07		5.82		6.42		7.76	
REINF.(KG)			162		174		210		209		225		273		256		276		335	

TABLE OF REINFORCEMENT
FOR D = 150 CM.

BAR MARK	SIZE ø (mm.)	@	FOR 1 PIPES						FOR 2 PIPES						FOR 3 PIPES					
			SKEW15°		SKEW30°		SKEW45°		SKEW15°		SKEW30°		SKEW45°		SKEW15°		SKEW30°		SKEW45°	
			NO.	L	NO.	L	NO.	L	NO.	L	NO.	L	NO.	L	NO.	L	NO.	L	NO.	L
B1	16	–	2	–	2	–	2	–	2	–	2	–	2	–	2	–	2	–	2	–
B2	16	45	4	–	4	–	4	–	4	–	4	–	4	–	4	–	4	–	4	–
B3	16	–	3	–	2	–	2	–	2	–	2	–	2	–	2	–	2	–	2	–
H1	12	–	6	–	6	–	6	–	6	–	6	–	6	–	6	–	6	–	6	–
L1	12	45	16	130	17	130	21	130	21	130	23	130	28	130	26	130	29	130	35	130
L2	16	30	23	–	24	–	29	–	23	–	24	–	29	–	23	–	24	–	29	–
L3	16	–	–	–	–	–	–	–	2	113	2	113	2	113	4	113	4	113	4	113
U1	16	–	2	892	2	974	2	1146	2	1125	2	1234	2	1464	2	1358	2	1494	2	1782
U2	16	–	2	214	2	240	2	290	2	447	2	500	2	608	2	680	2	760	2	926
W1	12	–	4	–	4	–	4	–	4	–	4	–	4	–	4	–	4	–	4	–
CONC.(M^3)			4.81		5.28		6.36		6.52		7.19		8.68		8.23		9.10		11.02	
REINF.(KG)			216		237		280		275		299		359		335		365		438	

INSIDE DIA. OF PIPE "D"	DIMENSION	
	C	G
80	103	140
100	125	164
120	148	190
150	180	225

NOTE :

1. ALL DIMENSIONS ARE IN CENTIMETERS UNLESS OTHERWISE INDICATED.
2. CONCRETE SHALL HAVE A MINIMUM ULTIMATE COMPRESSIVE STRENGTH OF 20 MPa.(204 KSC.) FOR 15x15x15 CM. CUBE AT 28 DAYS, CEMENT SHALL CONFORM TO TIS. 15 TYPE I PORTLAND CEMENTOR APPROVAL TYPE.
3. REINFORCING STEEL SHALL CONFORM TO TIS.24 GRADE SD 40 FOR DEFORMED BARS.
4. CLEAR CONCRETE COVER SHALL BE 4 CM. UNLESS OTHERWISE INDICATED.
5. LOCATIONS OF LAP SPLICE OF REBARS SHALL BE APPROVED BY THE ENGINEER.
6. LAP LENGTH SHALL NOT BE LESS THAN 24 BAR DIAMETERS.
7. ALL CONCRETE EXPOSED CORNERS SHALL HAVE 2 CM. CHAMFERS UNLESS OTHERWISE INDICATED.
8. DIMENSIONS OF HEADWALL AND QUANTITIES OF MATERIAL SHOWN IN THE TABLES ARE FOR EMBANKMENT SLOPE OF 2:1 ONLY FOR EMBANKMENT SLOPE 1.5:1, ALL DIMENSION SHALL BE WORKED OUT FROM DIMENSION OF "A" = 1.2 D.
9. THE SKEW ANGLE (⊖) AS SHOWN ON THIS DRAWING SHALL NOT EXCEED 45°.
10. WALL AND SLAB THICKNESSES SHALL BE 20 CM. FOR ALL SKEWED HEADWALLS.
11. UNLESS OTHERWISE SPECIFILED, THESE HEADWALLS SHALL BE USED FOR HIGHWAYS CLASS D AND CLASS 1.
12. FOR ROLLING AND MOUNTAINOUS TERRAINS, THESE HEADWALLS SHALL BE USED AS NECESSARY AND DEPEND ON SURFACE RUNOFF CONDITIONS.

KINGDOM OF THAILAND
MINISTRY OF TRANSPORT
DEPARTMENT OF HIGHWAYS

STANDARD DRAWING

CONCRETE HEADWALL FOR R.C. PIPE CULVERT
WING WALL TYPE FOR SKEW CULVERTS

DESIGNED : D.O.H. & CONSULTANTS	**CHECKED :** BUREAU OF LOCATION & DESIGN		**DATE :** OCT 2015
SUBMITTED :	(DIRECTOR OF LOCATION & DESIGN BUREAU)		**SCALE :** AS SHOWN
			DWG NO. DS-106
APPROVED :	(FOR DIRECTOR GENERAL)		**SHEET NO.** 94

REF.	REVISION	SIGNATURE	DATE

D:\std dwg 2015\DS-106(REV00)

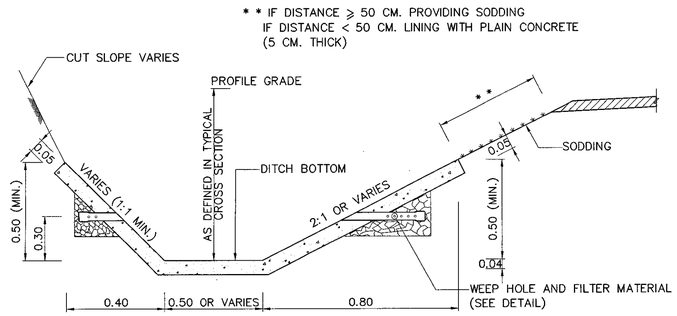

TYPE I PLAIN CONCRETE DITCH LINING
NOT TO SCALE

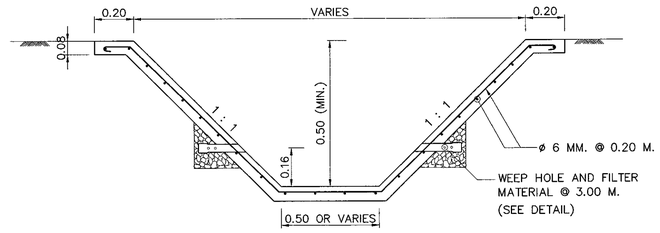

TYPE IV SIDE DITCH FOR VILLAGE SECTION
NOT TO SCALE

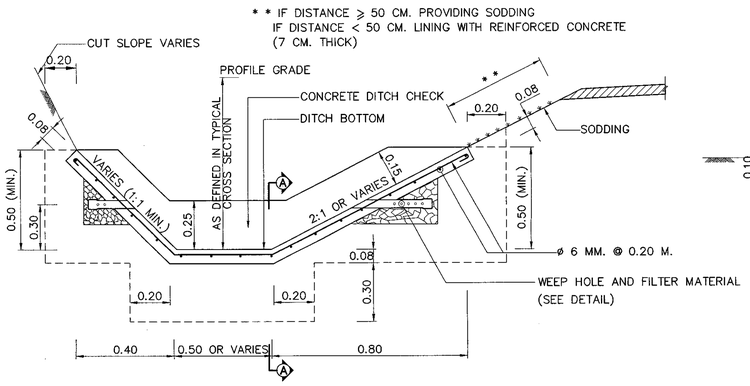

TYPE II REINFORCED CONCRETE DITCH LINING
NOT TO SCALE

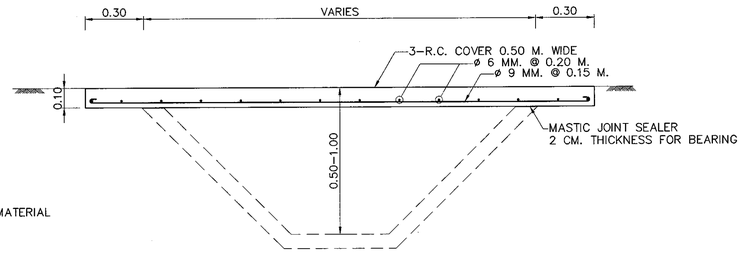

DETAIL FOR R.C. COVER FOR CROSS WALK
NOT TO SCALE

NOTES :

1. ALL DIMENSIONS ARE IN METERS UNLESS OTHERWISE INDICATED.
2. CONCRETE SHALL HAVE A MINIMUM ULTIMATE COMPRESSIVE STRENGTH OF 18 MPa.(184 KSC.) FOR 15x15x15 CM. CUBE AT 28 DAYS, CEMENT SHALL CONFORM TO TIS. 15 TYPE I PORTLAND CEMENTOR APPROVAL TYPE.
3. REINFORCING STEEL SHALL CONFORMED TO TIS 20 GRADE SR 24.
4. THE THREE TYPES OF DITCH LINING SHALL BE CONSTRUCTED IN THE AREA OF RAINFALL INTENSITY NOT OVER 10 IN/HR. IN CASE OF RAINFALL INTENSITY IS OVER 10 IN /HR, DITCH LINING SHALL BE DESIGNED BY THE ENGINEER
5. DITCH LINING SHALL BE CONSTRUCTED BY CONSIDERATION OF THE SOIL CONDITION, EROSION AND THE DISCHARGE IN THE DITCH GENERALLY, DITCH LINING SHALL BE CONSTRUCTED IF ROADWAY GRADE EXCEEDS 6%
6. IN CASE OF LENGTH OF DITCH > 500 M. DITCH LINING SHALL BE DESIGNED BY THE ENGINEER
7. CONCRETE DITCH CHECK SHALL BE CONSTRUCTED FOR TYPE II AND TYPE III OF THE LINING GENERALLY THE SPACING OF DITCH CHECK SHALL NOT EXCEED 150 M., 120 M., 100 M. AND 80 M. FOR ROADWAY GRADE OF 6%, 8%, 10% AND 12% RESPECTIVELY, BUT THE LOCATION SHALL SUITABLY BE CONSIDERED IN THE FIELD AND BY THE APPROVAL OF THE ENGINEER FOR THE PARTICULAR TYPE OF TERRAINS.
8. FOR TYPE IV THE CONCRETE SIDE DITCH WITH R.C. COVER FOR CROSS WALK SHALL BE USED AT COMUNITY AS DIRECTED BY THE ENGINEER AND SHALL BE PLACE IN SECTION OF 3.00 M. INTERVAL, THE JOINT WIDTH BETWEEN SECTIONS SHALL NOT EXCEED 1 CM. AND THE JOINTS SHALL BE SEALED WITH SAND ASPHALT CEMENT WITH 4:1 MIXTURE RATIO
9. CONCRETE DITCH TYPE V AT HILLSIDE SHALL BE CONSTRUCTED AT THE HIGH CUT GRADIENT OR THE AREA IN WHICH NARROW., CONSTRUCTION JOINT OF 1 CM. WIDTH MUST BE PROVIDED AT THE INTERVAL OF 10 M. AND FILLED WITH MOTAR 1:3 BY VOLUMN.

CONSTRUCTION DETAILS

TYPE I , TYPE II CONCRETE DITCH LINING

1.1 THE EXISTING DITCH OR CHANNEL SHALL BE EXCAVATED AND SHAPED IN ACCORDANCE WITH THE DRAWINGS AND THE GROUND SHALL BE COMPACTED PROPERLY THE DITCH GRADENT SHALL BE THE SAME OR SIMILAR TO THE ROADWAY GRADIENT

1.2 CONCRETE SHALL HAVE A MINIMUM ULTIMATE COMPRESSIVE STRENGTH OF 18 MPa.(180 KSC.) FOR 15x15x15 CM. AT 28 DAYS.

1.3 BEFORE PLACING CONCRETE, THE AREA SHALL BE THROUGHLY MOISTENED WITH WATER TO ATTAIN OPTIMUM MOISTURE CONCRETE SHALL BE PLACED IN SECTIONS OF 1.00 M.MAXIMUM IN LENGTH FOR TYPE I AND 3.00 M. MAXIMUM FOR TYPE II, THE JOINT WIDTH BETWEEN SECTIONS SHALL NOT EXCEED 1 CM. AND THE JOINTS SHALL BE SEALED WITH SAND ASPHALT CEMENT WITH 4:1 MIXTURE RATIO

1.4 REINFORCING STEEL SHALL BE PLAIN ROUND BARS CONFORMING TO TIS 20 GRADE SR 24 LAPPING FOR ø 6 MM. REINFORCING STEEL SHALL BE 25 CM. MINIMUM

1.5 REINFORCING STEEL SHALL ALSO BE WELDED WIRE FABRIC WITH THE SPECIFICATIONS AS FOLLOWS :

1.5.1 SPECIFICATION SHALL CONFORM TO AASHTO DESIGNATION M 55–75 (ASTM DESIGNATION A 185–73) AND AASHTO DESIGNATION M 32–78 (ASTM DESIGNATION A 82–76)

1.5.2 LAPPED SPLICES OF WELDED WIRE FABHIC IS 15 CM. MINIMUM

1.5.3 MESH SIZE OF THE WIRE FABRIC IS 2"x2"

1.5.4 THE QUANTITIES OF THE WELDED WIRE FABRIC CALCULATED FROM NOMINAL AREA MUST BE AT LEAST 0.730 $CM.^2/M.$ (IN EACH DIRECTION) AND THE WELDED WIRE FABRIC SHALL BE SMOOTH AND THE WELDED JOINT SHALL NOT LOOSE OVER 1% WHILE PLACING FOR CONSTRUCTION OF CONCRETE DITCH LINING

1.5.5 CONCRETE SHALL BE CURED AFTER PLACING

TYPE III MORTAR RIP – RAP DITCH LINING

2.1 THE METHOD OF CONSTRUCTION SHALL BE THE SAME AS IN NO. 1.1

2.2 THE STONES USED FOR RIP – RAP DITCH LINING SHALL WEIGHT 20–45 KG. EACH AND AT LEAST 50% SHALL WEIGHT MORE THAN 35 KG. STONES SHALL HAVE SUCH AND DIMENSIONS AS TO MINIMIZE THE INTERSPLICES AFTER PLACING. THE THICKNESS OF THE STONES SHALL BE APPROXIMATELY 15 CM.

2.3 THE LARGER STONES SHALL BE PLACED FIRST AND THE INTERSPLICES SHALL BE FILLED WITH SPALLS OR SMALL STONES UNTIL A SMOOTH SURFACE IS OBTAINED FRESH MORTAR SHALL THEN BE APPLIED TO SEAL ALL JOINTS

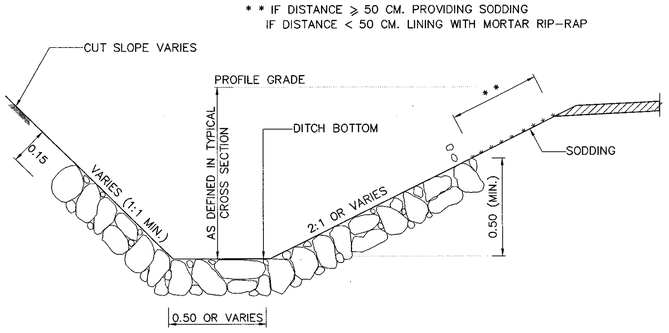

TYPE III MORTAR RIP–RAP DITCH LINING
NOT TO SCALE

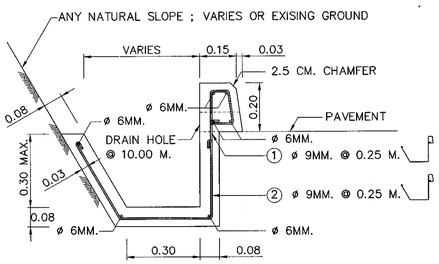

TYPE V CONCRETE DITCH AT HILLSIDE
SCALE 1 : 12.5

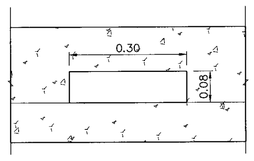

DETAIL FOR DRAIN HOLE
NOT TO SCALE

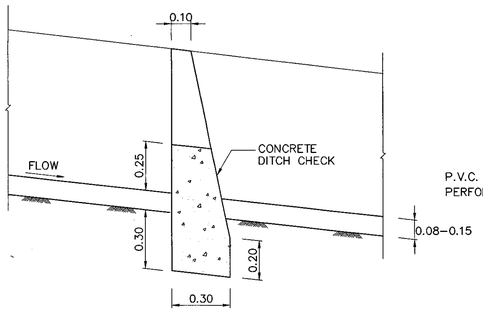

SECTION Ⓐ – Ⓐ DETAIL FOR DITCH CHECK
SCALE 1 : 10

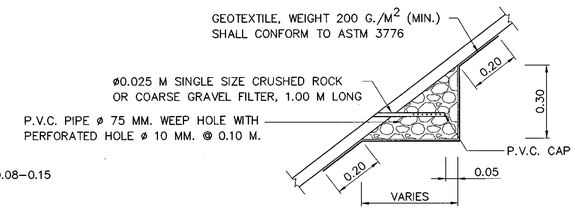

DETAIL OF WEEP HOLE AND FILTER MATERIAL
SCALE 1 : 10

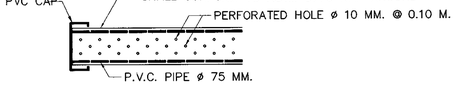

DETAIL OF PERFORATED PIPE
NOT TO SCALE

REF.	REVISION	SIGNATURE	DATE

KINGDOM OF THAILAND

MINISTRY OF TRANSPORT
DEPARTMENT OF HIGHWAYS

STANDARD DRAWING

SIDE DITCH LINING

DESIGNED : D.O.H. & CONSULTANTS	CHECKED : BUREAU OF LOCATION & DESIGN	DATE : OCT 2015
SUBMITTED : (DIRECTOR OF LOCATION & DESIGN BUREAU)		SCALE : AS SHOWN
APPROVED : (FOR DIRECTOR GENERAL)		DWG NO. DS–201
		SHEET NO. 95

D:\std dwg 2015\DS-201(REV00)

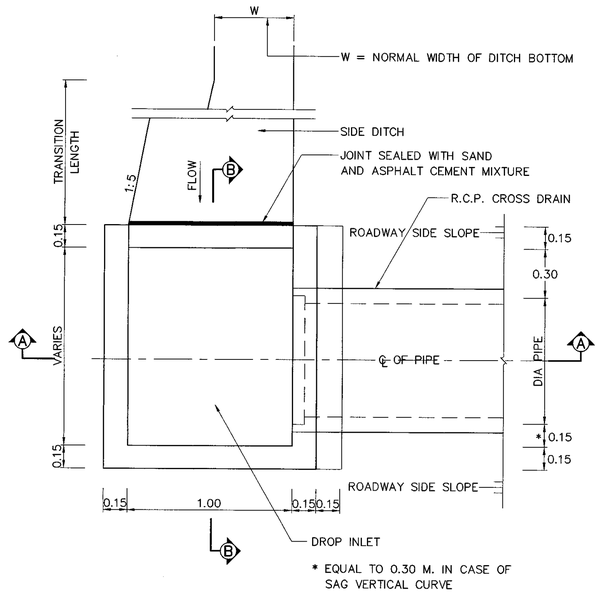

PLAN VIEW OF DROP INLET
NOT TO SCALE

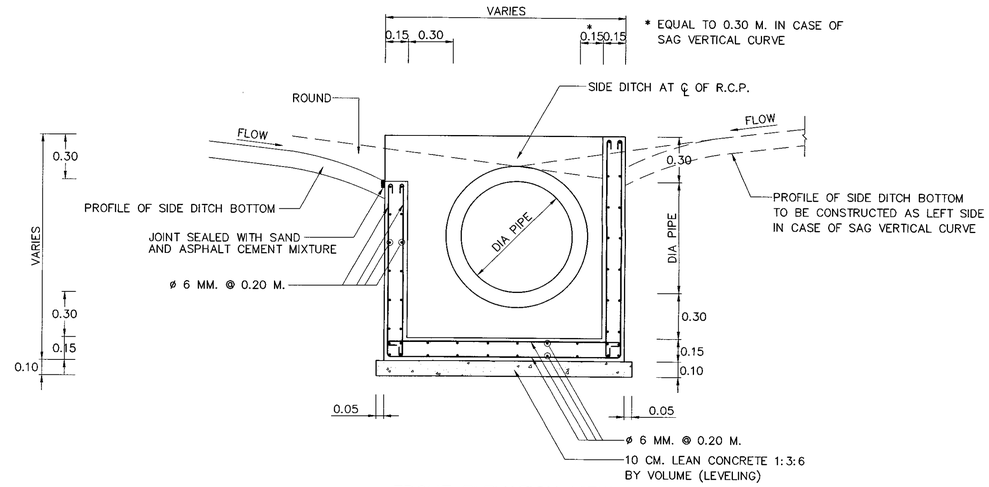

FRONT ELEVATION VIEW

SECTION Ⓑ – Ⓑ
NOT TO SCALE

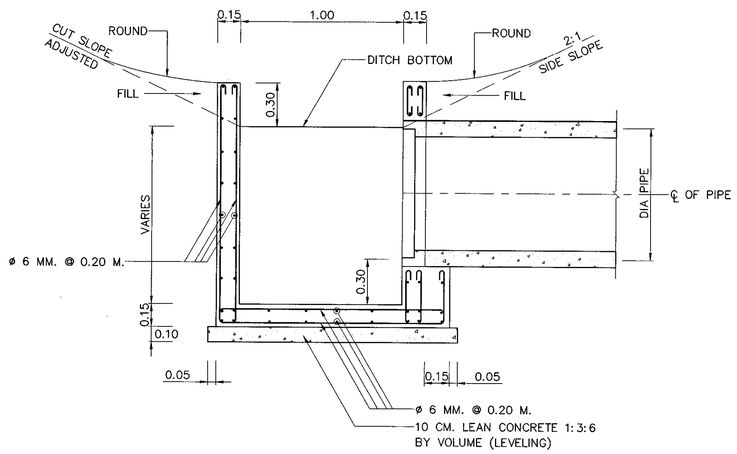

SIDE ELEVATION VIEW

SECTION Ⓐ – Ⓐ
NOT TO SCALE

NOTES :

1. ALL DIMENSIONS ARE IN METERS UNLESS OTHERWISE INDICATED.
2. CONCRETE SHALL HAVE A MINIMUM ULTIMATE COMPRESSIVE STRENGTH OF 18 MPa.(184 KSC.) FOR 15x15x15 CM. CUBE AT 28 DAYS, CEMENT SHALL CONFORM TO TIS. 15 TYPE I PORTLAND CEMENTOR APPROVAL TYPE.
3. REINFORCING STEEL SHALL CONFORM TO TIS.20 GRADE SR 24 FOR ROUND BARS.
4. CLEAR CONCRETE COVER SHALL BE 2.5 CM.
5. DROP INLET SHALL BE CONSTRUCTED IN THE LONG AND STEEP SIDE DITCH OR SIDE DITCH ALONG CIRCULAR CURVE AND THE HIGH CUT GRADIENT IN WHICH THE WATER CAN BE DRAINED TO THE OTHER SIDE OF THE ROADWAY OR AT THE LOWEST POINT OF THE SIDE DITCH IN THE SAG VERTICAL CURVE.
6. THE SIZE OF THE R.C. PIPE CULVERT INSTALLED AT THE DROP INLET SHALL BE SELECTED SUITABLY IN THE FIELD. GENERALLY THE R.C. PIPE CULVERT SHALL BE ø 0.80 M.
7. THE QUANTITIES OF THE DROP INLET SHALL INCLUDE TAPERED LENGTH OF THE SIDE DITCH TO THE DROP INLET.
8. HEADWALL SHALL BE CONSTRUCTED AT THE OUTLET OF THE R.C. PIPE CULVERT. WHEN THE OUTLET END OF THE DRAIN PIPE IS NOT AT THE TOE OF SLOPE, R.C. DRAIN CHUTE SHALL BE CONSTRUCTED.

REF.	REVISION	SIGNATURE	DATE

KINGDOM OF THAILAND

MINISTRY OF TRANSPORT
DEPARTMENT OF HIGHWAYS

STANDARD DRAWING

INLET FOR R.C. PIPE CULVERT
DROP INLET FOR SIDE DITCH

DESIGNED : D.O.H. & CONSULTANTS	**CHECKED :** BUREAU OF LOCATION & DESIGN	**DATE :** OCT 2015
SUBMITTED : (DIRECTOR OF LOCATION & DESIGN BUREAU)		**SCALE :** AS SHOWN
APPROVED : (FOR DIRECTOR GENERAL)		**DWG NO.** DS-301
		SHEET NO. 96

D:\std dwg 2015\DS-301(REV00)

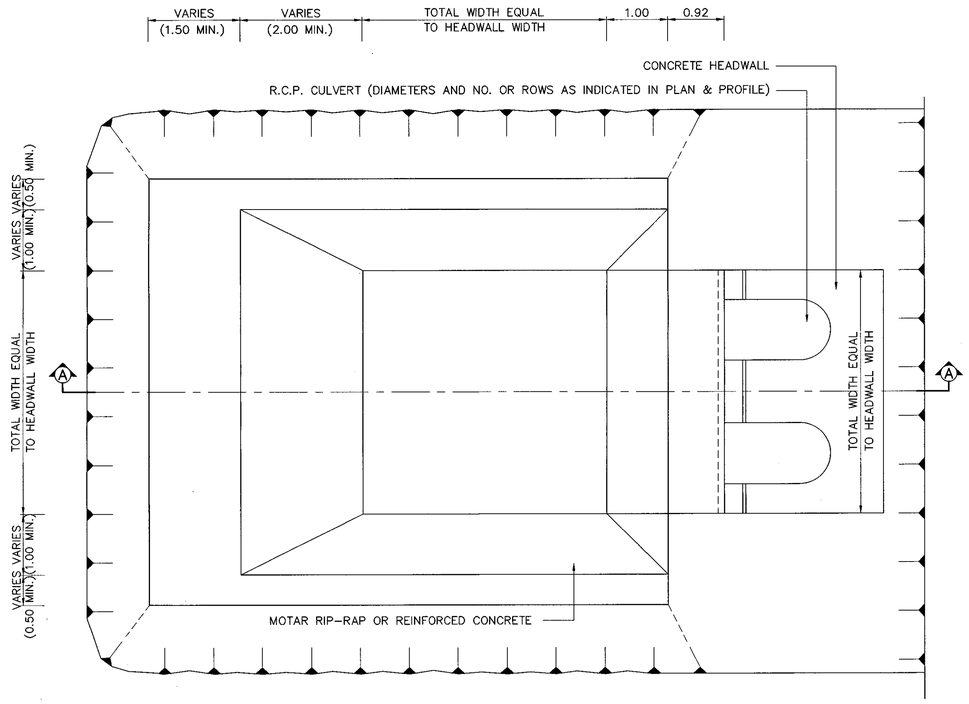

PLAN OF CATCH BASIN
SCALE 1 : 50

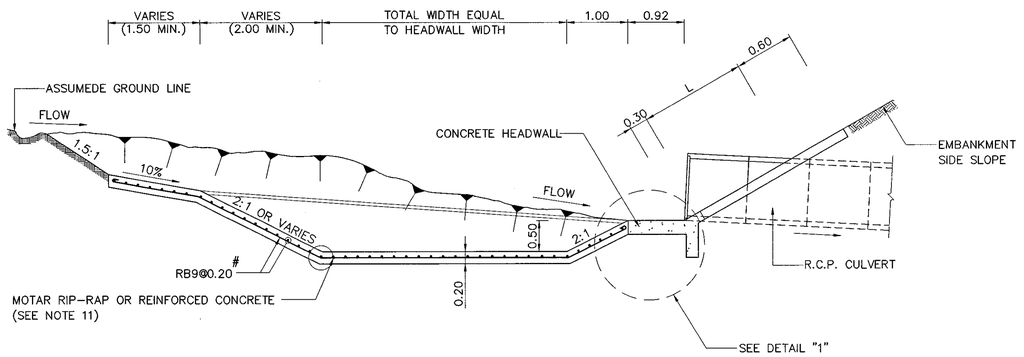

SECTION Ⓐ – Ⓐ
SCALE 1 : 50

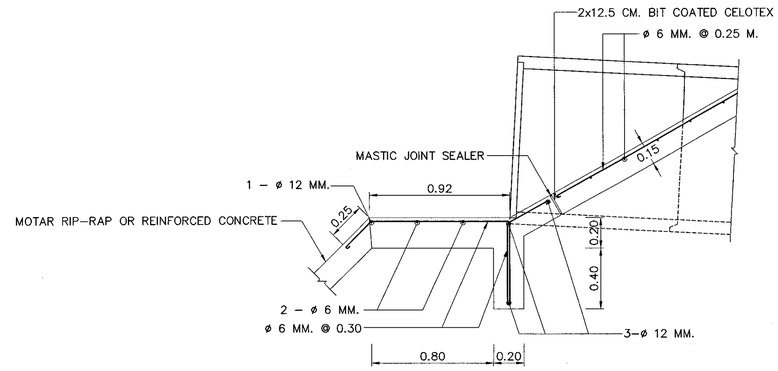

DETAIL "1"
SCALE 1 : 20

NOTES :

1. ALL DIMENSIONS ARE IN METERS UNLESS OTHERWISE INDICATED.
2. CONCRETE SHALL HAVE A MINIMUM ULTIMATE COMPRESSIVE STRENGTH OF 18 MPa.(184 KSC.) FOR 15x15x15 CM. CUBE AT 28 DAYS, CEMENT SHALL CONFORM TO TIS. 15 TYPE I PORTLAND CEMENT OR APPROVAL TYPE.
3. REINFORCING STEEL SHALL CONFORM TO TIS.20 GRADE SR 24 FOR ROUND BARS.
4. CLEAR CONCRETE COVER SHALL BE 3 CM.
5. STONE USED FOR MORTAR RIP-RAP SHALL WEIGH BETWEEN 20-45 KG. EACH AND AT LEAST 50 PERCENT SHALL WEIGH MORE THAN 35 KG. STONES SHALL HAVE SUCH SHAPE AND DIMENSIONS AS TO MINIMIZE THE INTERSTICES AFTER PLACING. THE THICKNESS OF THE STONES SHALL BE APPROXIMATELY 15 CM. OR SHOWN ON THE DRAWING.
6. THE LARGEST STONE SHALL BE PLACED FIRST. THE INTERSTICES SHALL BE FILLED WITH SPALLS OR SMALL STONES UNTIL A SMOOTH SURFACE IS OBTAINED THEN FRESH MOTAR SHALL BE APPLIED TO SEAL ALL JOINTS.
7. MOTAR MIXTURE SHALL BE 1:2 BY VOLUME.
8. MASTIC JOINT SEALER SHALL CONFORM TO TIS.479
9. EXCAVATION OR CONSTRUCTION OF EMBANKMENTS SHALL BE PROCESSED AND COMPACTED TO PLANNED SHAPES AND DIMENSIONS.
10. THIS CATCH BASIN AT INLET SHALL BE USE WHEN:
    - 10.1 THE CANAL'S SLOPE IS VERY STEEP.
    - 10.2 HIGH CONCENTRATION OF SEDIMENT IN THE WATER
    - 10.3 THE CROSS DRAIN PIPE IS INSTALLED AT SAG CURVE
11. WHEN VELOCITY OF FLOW INLET EXCEED 3 M/SEC. SHALL BE USE REINFORCED CONCRETE.

REF.	REVISION	SIGNATURE	DATE

KINGDOM OF THAILAND

MINISTRY OF TRANSPORT
DEPARTMENT OF HIGHWAYS

STANDARD DRAWING

INLET FOR R.C. PIPE CULVERT
INLET CATCH BASIN

DESIGNED : D.O.H. & CONSULTANTS	**CHECKED :** BUREAU OF LOCATION & DESIGN	**DATE :** OCT 2015
SUBMITTED : (DIRECTOR OF LOCATION & DESIGN BUREAU)		**SCALE :** AS SHOWN
APPROVED : (FOR DIRECTOR GENERAL)		**DWG NO.** DS-302
		SHEET NO. 97

D:\std dwg 2015\DS-302(REV00)

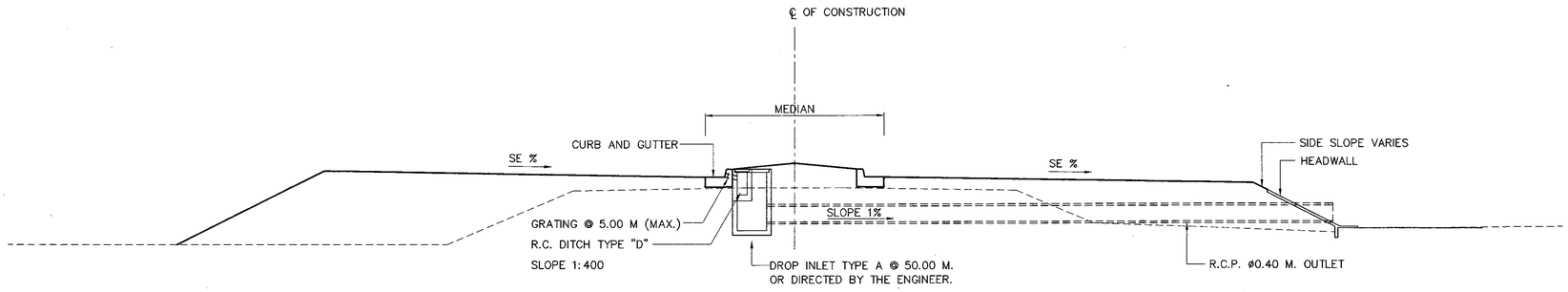

TYPICAL CROSS SECTION FOR DROP INLET OF SUPERELEVATION (RAISED MEDIAN)

SCALE 1 : 75

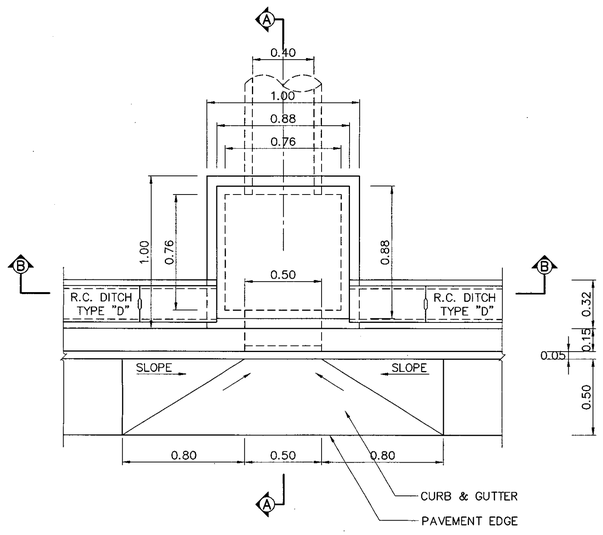

PLAN OF DROP INLET TYPE A

SCALE 1 : 20

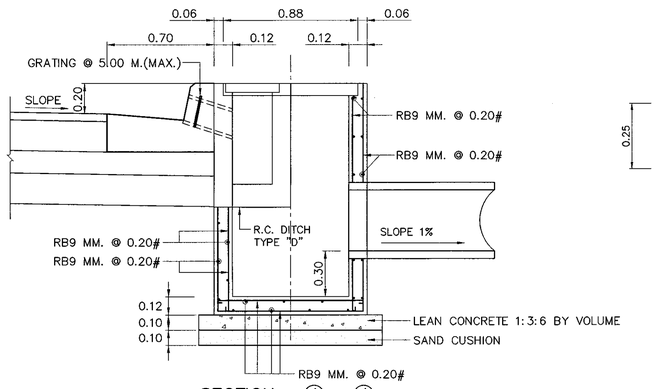

SECTION Ⓐ – Ⓐ

SCALE 1 : 20

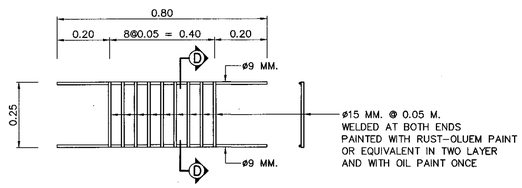

STEEL GRATING DETAILS

SCALE 1 : 10

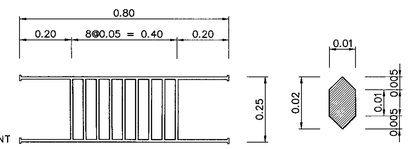

CAST-IRON GRATING DETAILS

SCALE 1 : 10

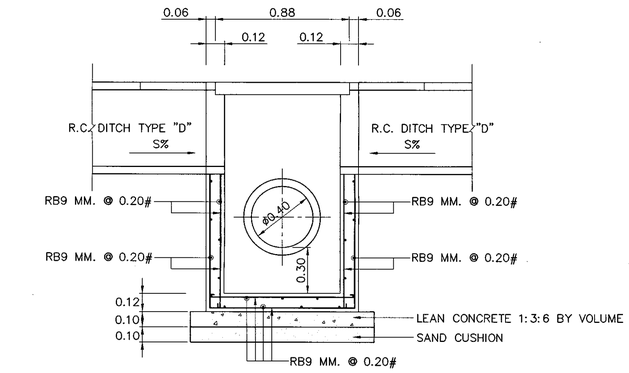

SECTION Ⓑ – Ⓑ

SCALE 1 : 20

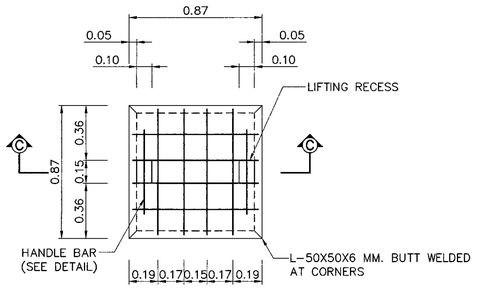

PLAN OF DROP INLET TYPE A COVER

SCALE 1 : 20

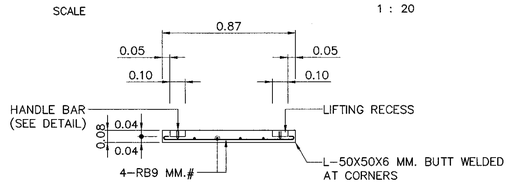

SECTION Ⓒ – Ⓒ

SCALE 1 : 20

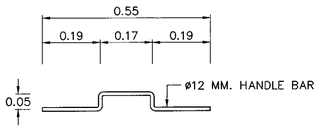

HANDLE BAR DETAIL

SCALE 1 : 10

NOTES :

1. ALL DIMENSIONS ARE IN METERS UNLESS OTHERWISE INDICATED.
2. CONCRETE SHALL HAVE A MINIMUM ULTIMATE COMPRESSIVE STRENGTH OF 20 MPa.(204 KSC.) FOR 15x15x15 CM. CUBE AT 28 DAYS, CEMENT SHALL CONFORM TO TIS. 15 TYPE I PORTLAND CEMENTOR APPROVAL TYPE.
3. REINFORCING STEEL SHALL CONFORM TO TIS 20 GRADE SR 24 FOR ROUND BARS.
4. STRUCTURAL STEEL AND FLAT PLATE STEEL SHALL BE PAINTED WITH (RUST-OLEUM PAINT) OR EQUIVALENT TWICE AND WITH OIL PAINT ONCE.
5. CLEAR CONCRETE COVER SHALL BE 2.5 CM.
6. DROP INLET TYPE "A" SHALL BE CONSTRUCTED TO 50 M. SPACING OR DIRECTED BY THE ENGINEER AND AT THE LOWEST POINT OF SAG CURVE.

REF.	REVISION	SIGNATURE	DATE

KINGDOM OF THAILAND
MINISTRY OF TRANSPORT
DEPARTMENT OF HIGHWAYS

STANDARD DRAWING
DROP INLET IN MEDIAN
TYPE A : FOR RAISED MEDIAN

DESIGNED : D.O.H. & CONSULTANTS	CHECKED : BUREAU OF LOCATION & DESIGN	DATE : OCT 2015
SUBMITTED : (DIRECTOR OF LOCATION & DESIGN BUREAU)		SCALE : AS SHOWN
APPROVED : (FOR DIRECTOR GENERAL)		DWG NO. DS-401
		SHEET NO. 98

D:\std dwg 2015\DS-401(REV00)

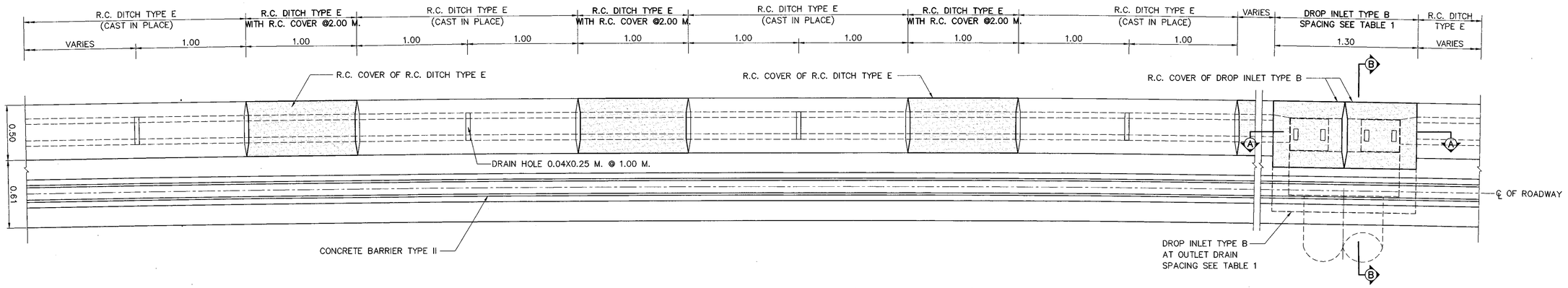

MEDIAN DRAINAGE FOR SUPERELEVATION PLAN (BARRIER MEDIAN)

SCALE 1 : 20

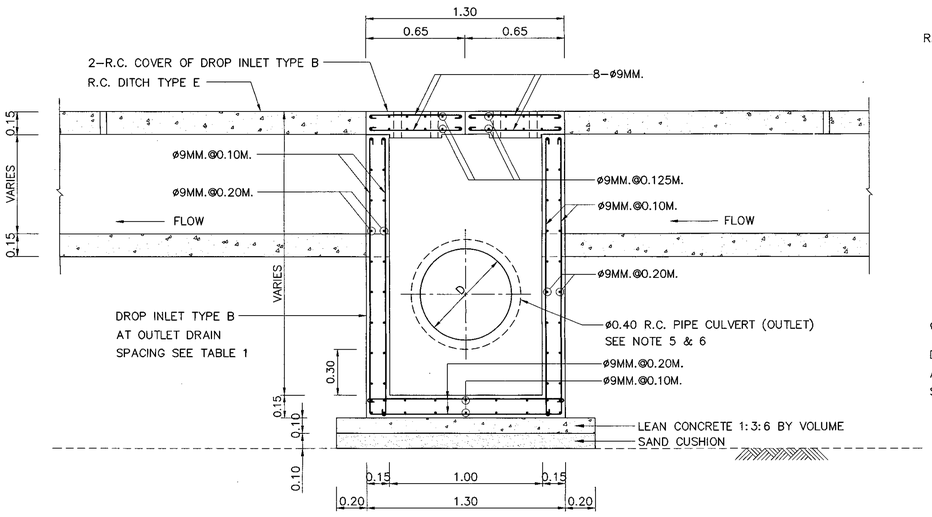

SECTION Ⓐ – Ⓐ

SCALE 1 : 20

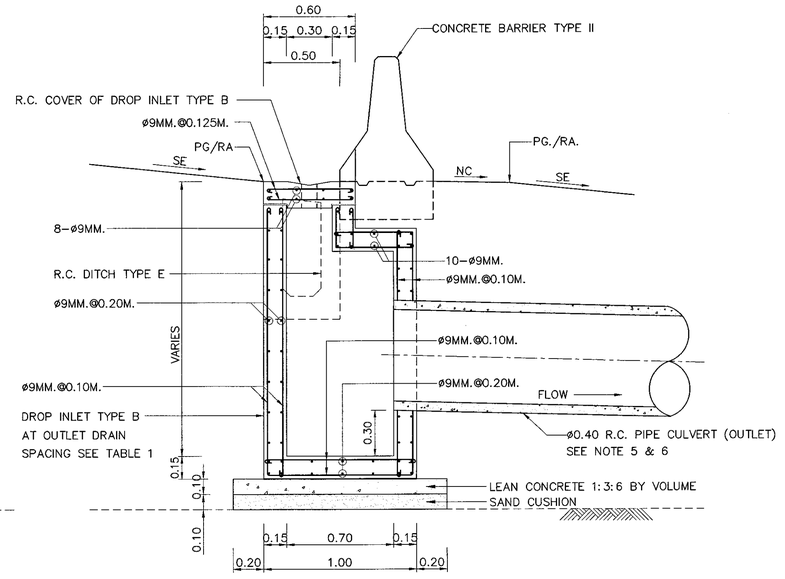

SECTION Ⓑ – Ⓑ

SCALE 1 : 20

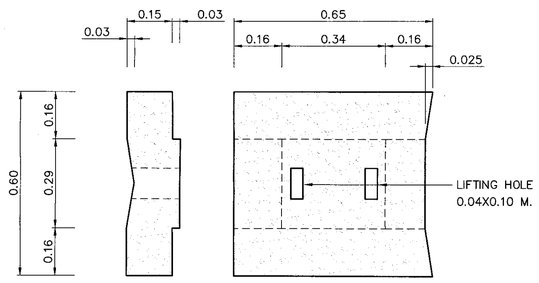

TYPICAL R.C. COVER OF DROP INLET TYPE B

SCALE 1 : 10

TABLE 1 SPACING FOR OUTLET DRAIN ; S

DITCH SLOPE	0.6%	2.0%	4.0%	6.0%	8.0%	10.0%	12.0%
TYPICAL SPACING ; S (M.)	50	50	50	50	50	50	50
MAXIMUM SPACING ; Smax (M.)	50	100	150	180	180	180	180

NOTES :

1. ALL DIMENSIONS ARE IN METERS UNLESS OTHERWISE INDICATED.
2. CONCRETE SHALL HAVE A MINIMUM ULTIMATE COMPRESSIVE STRENGTH OF 20 MPa.(204 KSC.) FOR 15x15x15 CM. CUBE AT 28 DAYS, CEMENT SHALL CONFORM TO TIS. 15 TYPE I PORTLAND CEMENTOR APPROVAL TYPE.
3. REINFORCING STEEL SHALL CONFORM TO TIS. 20 GRADE SR. 24 FOR ROUND BARS.
4. CLEAR CONCRETE COVER SHALL BE 3 CM.
5. IN GENERAL DROP INLET TYPE B WITH R.C.P.ø 0.40 M. OUTLET DRAIN SHALL BE CONSTRUTED WITH SPACING SHOWN IN TABLE 1 OR DIRECTED BY THE ENGINEER.
6. DROP INLET TYPE B WITH R.C.P. ø0.60 M. OUTLET DRAIN SHALL BE CONSTRUCTED WHEN DROP INLET IS IN A SAG BETWEEN TWO GRADES AS DIRECTED BY ENGINEER.

REF.	REVISION	SIGNATURE	DATE

KINGDOM OF THAILAND

MINISTRY OF TRANSPORT

DEPARTMENT OF HIGHWAYS

STANDARD DRAWING

DROP INLET IN MEDIAN

TYPE B : FOR BARRIER MEDIAN

DESIGNED : D.O.H. & CONSULTANTS	CHECKED : BUREAU OF LOCATION & DESIGN	DATE : OCT 2015
SUBMITTED : (DIRECTOR OF LOCATION & DESIGN BUREAU)		SCALE : AS SHOWN
APPROVED : (FOR DIRECTOR GENERAL)		DWG NO. DS–402
		SHEET NO. 99

D:\std dwg 2015\DS-402(REV00)

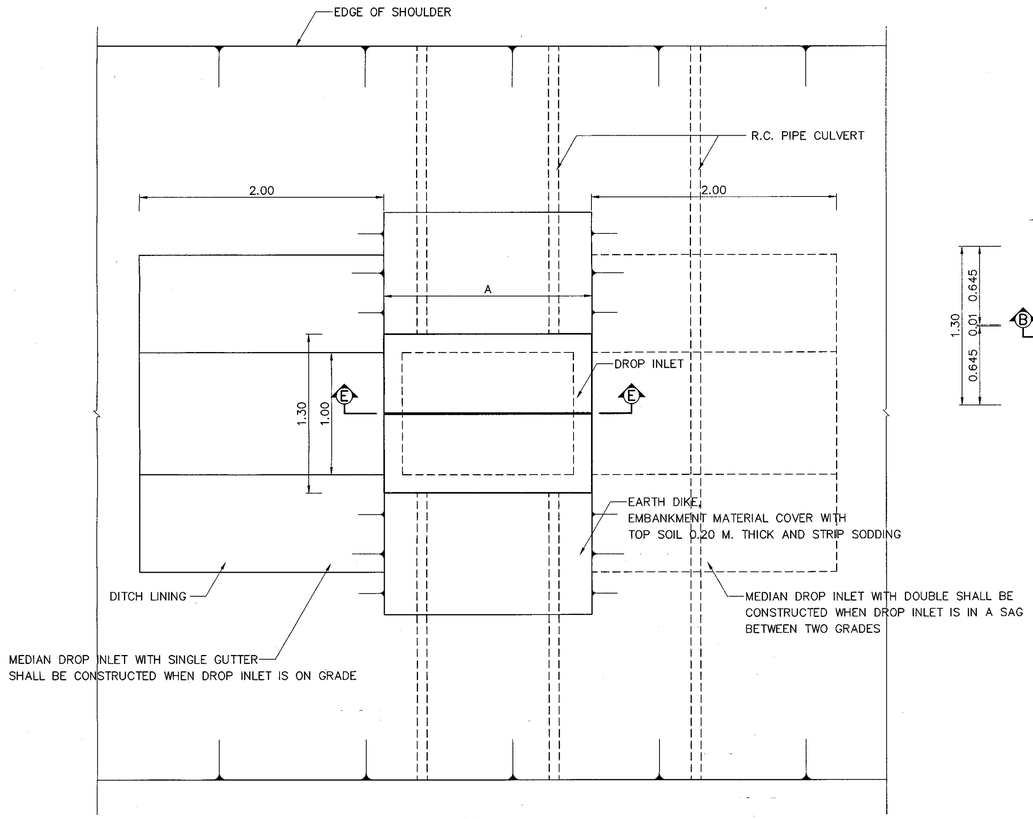

PLAN
SCALE 1 : 25

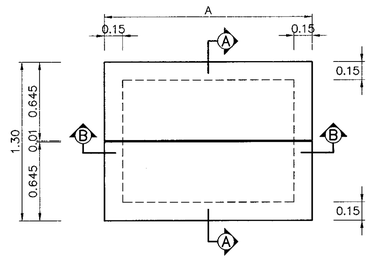

PLAN DROP INLET
SCALE 1 : 25

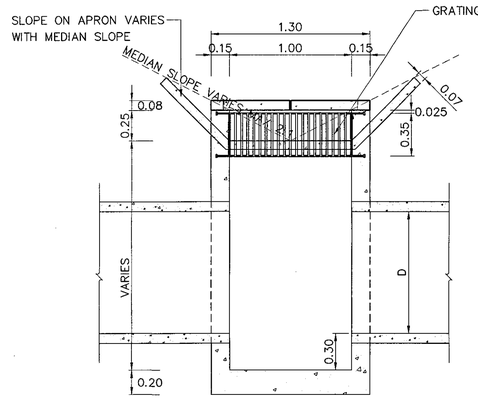

SECTION Ⓐ – Ⓐ
SCALE 1 : 25

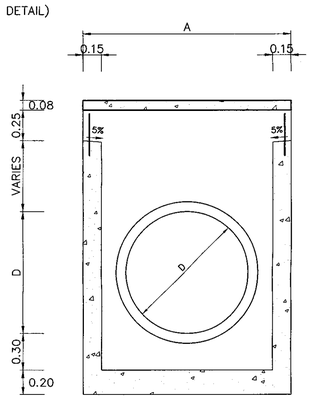

SECTION Ⓑ – Ⓑ
SCALE 1 : 25

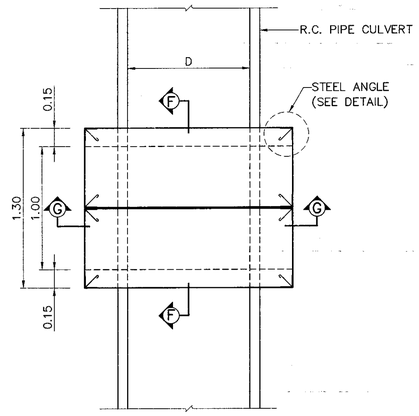

STEEL CORNER GUARD
SCALE 1 : 20

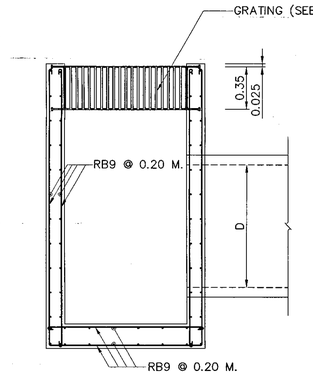

SECTION Ⓕ – Ⓕ
SCALE 1 : 20

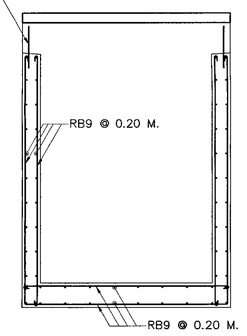

SECTION Ⓖ – Ⓖ
SCALE 1 : 20

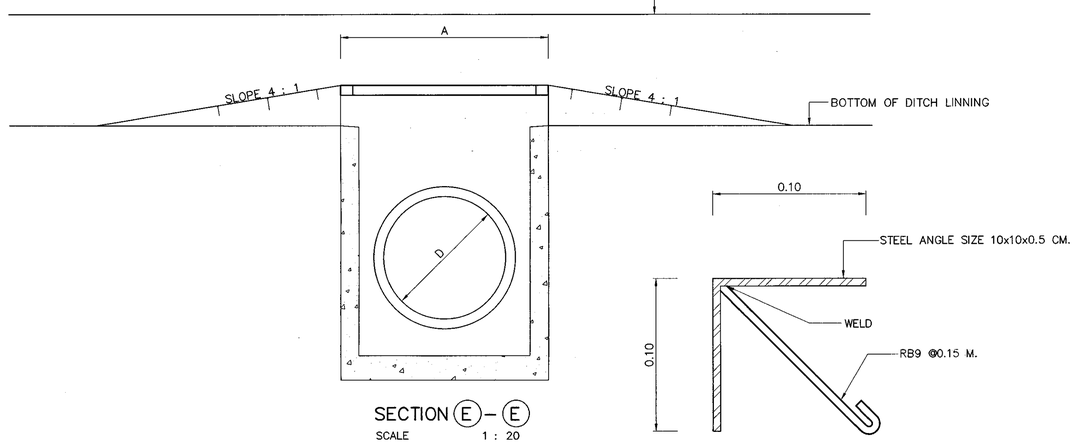

SECTION Ⓔ – Ⓔ
SCALE 1 : 20

DETAIL OF STEEL ANGLE
SCALE 1 : 2

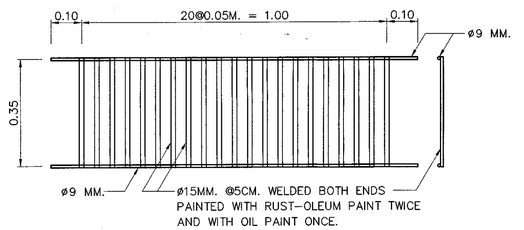

STEEL GRATING DETAILS
SCALE 1 : 10

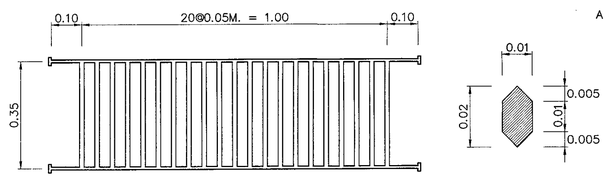

CAST-IRON GRATING DETAILS
SCALE 1 : 10

NOTE:

1. ALL DIMENSION ARE IN METERS UNLESS OTHERWISE INDICATED.
2. CONCRETE SHALL HAVE A MINIMUM ULTIMATE COMPRESSIVE STRENGTH OF 20 MPa.(204 KSC.) FOR 15x15x15 CM. CUBE AT 28 DAYS, CEMENT SHALL CONFORM TO TIS. 15 TYPE I PORTLAND CEMENTOR APPROVAL TYPE.
3. REINFORCING STEEL SHALL CONFORM TO TIS.20 GRADE SR 24 FOR ROUND BARS.
4. STRUCTURE STEEL SHALL CONFORM TO TIS.1227 GRADE SM400 AND PAINTED WITH RUST-OLEUM PANT OR EQUIVALENT IN TWO LAYERS AND WITH OIL PAINT ONCE.
5. CLEAR CONCRETE COVER SHALL BE 5 CM.
6. WIDTH OF DROP INLET (A)
   A = 1.10 M. FOR R.C. PIPE CULVERT DIAMETER D = 0.60 M.
   A = 1.35 M. FOR R.C. PIPE CULVERT DIAMETER D = 0.80 M.
   A = 1.55 M. FOR R.C. PIPE CULVERT DIAMETER D = 1.00 M.
   A = 1.80 M. FOR R.C. PIPE CULVERT DIAMETER D = 1.20 M.

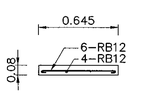

SECTION Ⓓ – Ⓓ
SCALE 1 : 20

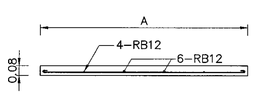

SECTION Ⓒ – Ⓒ
SCALE 1 : 20

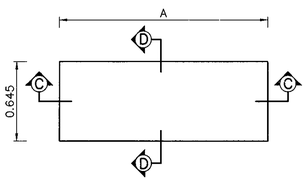

COVER FOR DROP INLET DETAIL
SCALE 1 : 20

KINGDOM OF THAILAND

MINISTRY OF TRANSPORT
DEPARTMENT OF HIGHWAYS

STANDARD DRAWING

DROP INLET IN MEDIAN

TYPE C : FOR DEPRESS MEDIAN – I

REF.	REVISION	SIGNATURE	DATE

DESIGNED : D.O.H. & CONSULTANTS
CHECKED : BUREAU OF LOCATION & DESIGN
SUBMITTED : (DIRECTOR OF LOCATION & DESIGN BUREAU)
APPROVED : (FOR DIRECTOR GENERAL)
DATE : OCT 2015
SCALE : AS SHOWN
DWG NO. DS-403
SHEET NO. 100

D:\std dwg 2015\DS-403(REV00)

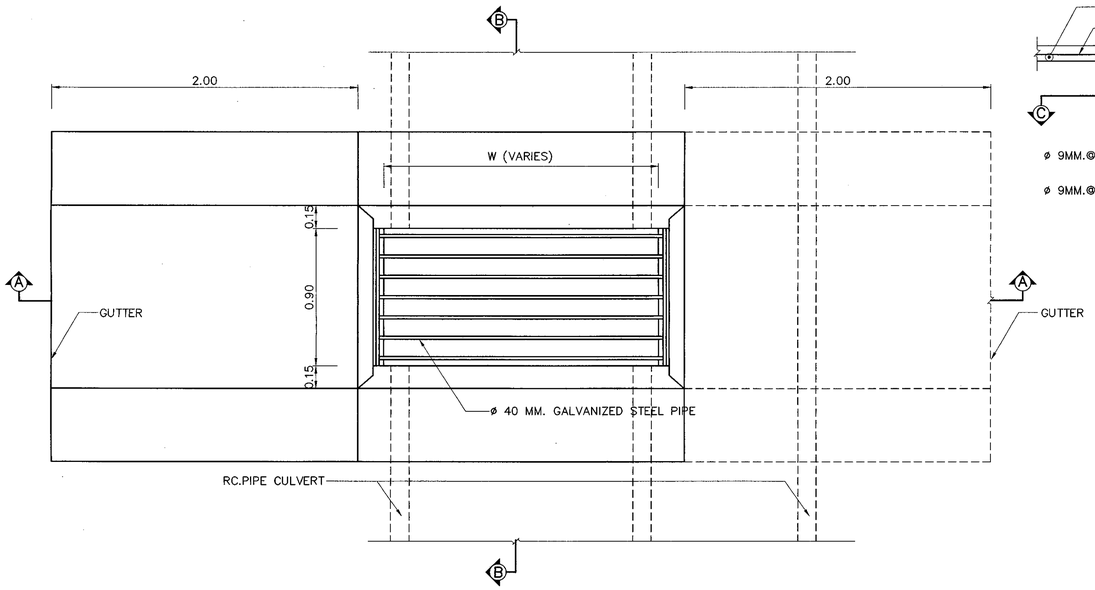

PLAN
SCALE 1 : 20

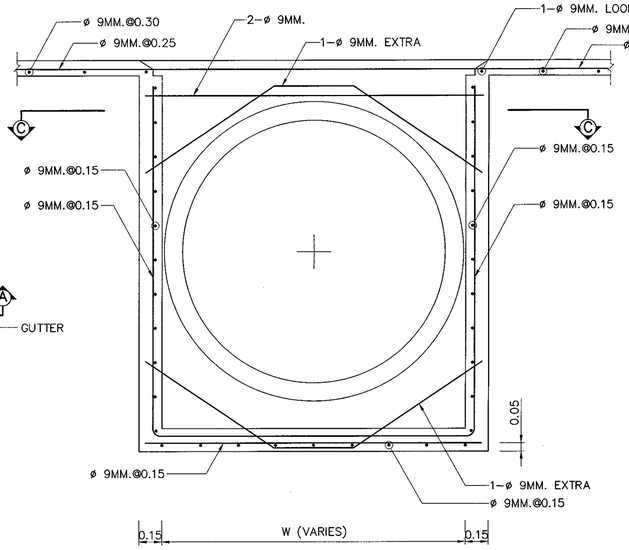

SECTION (A) – (A) REINFORCEMENT DETAILS
SCALE 1 : 20

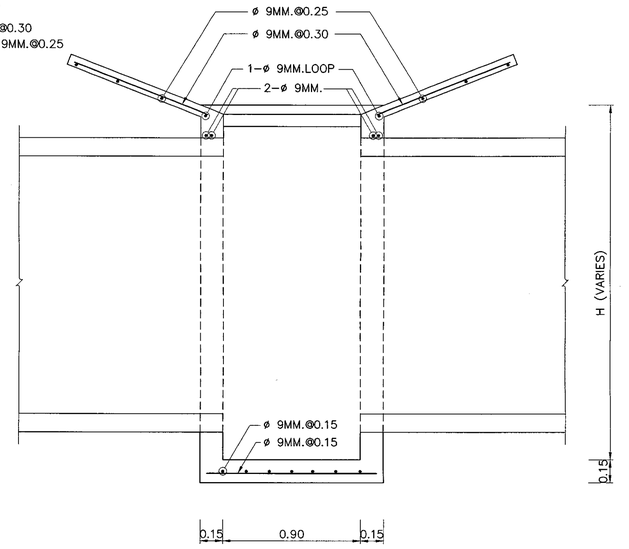

SECTION (B) – (B) REINFORCEMENT DETAILS
SCALE 1 : 20

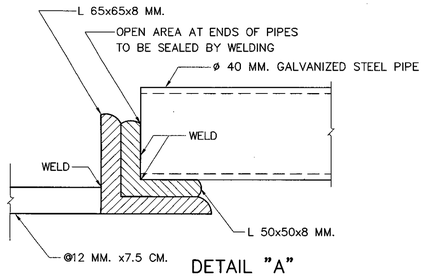

DETAIL "A"
SCALE 1 : 2

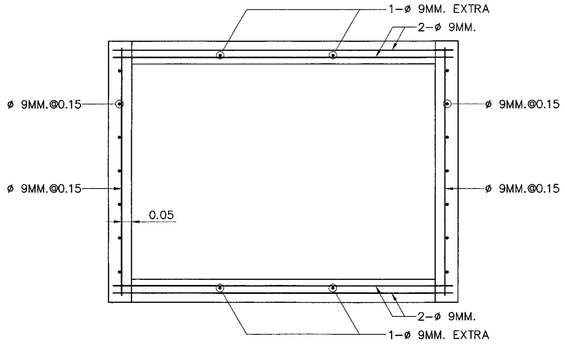

SECTION (C) – (C)
SCALE 1 : 20

DIMENSIONAL REQUIREMENTS OF MEDIAN DROP INLET		
INSIDE DIA. OF R.C. PIPE CULVERT (M.)	W (M.)	MIN. H (M.)
0.60	0.80	1.20
0.80	1.05	1.40
1.00	1.25	1.60
1.20	1.50	1.80

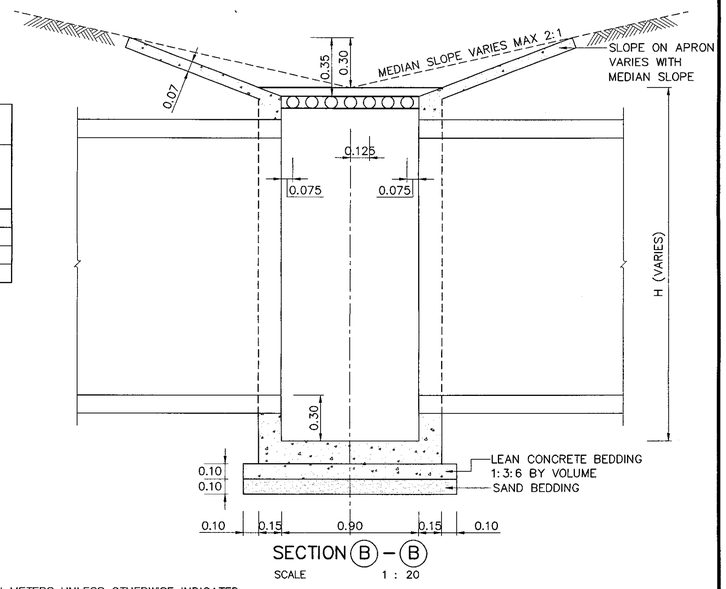

SECTION (B) – (B)
SCALE 1 : 20

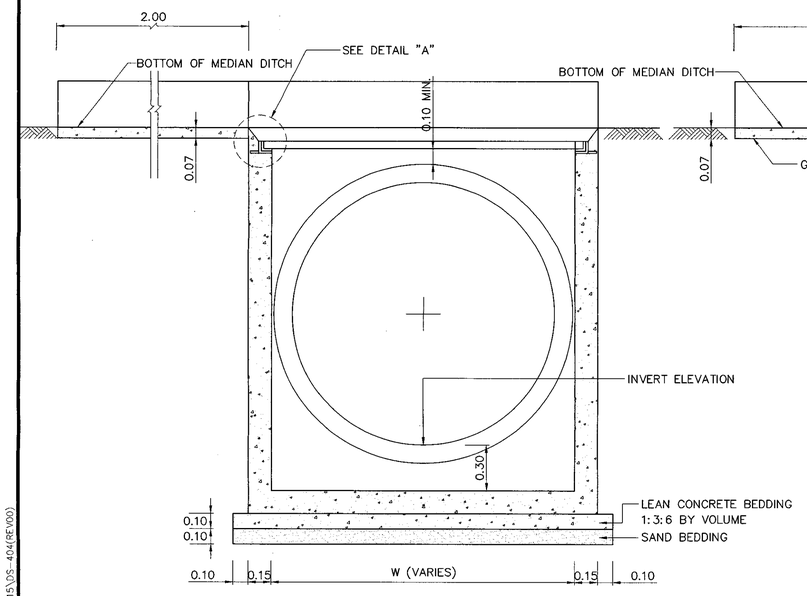

SECTION (A) – (A) FOR SINGLE GUTTER
SCALE 1 : 20

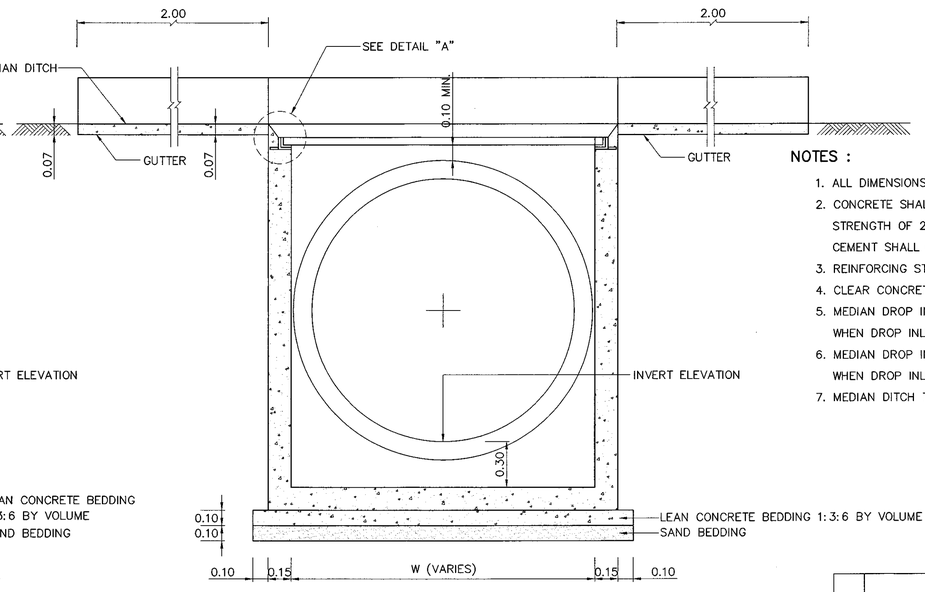

SECTION (A) – (A) FOR DOUBLE GUTTER
SCALE 1 : 20

NOTES :

1. ALL DIMENSIONS ARE IN METERS UNLESS OTHERWISE INDICATED.
2. CONCRETE SHALL HAVE A MINIMUM ULTIMATE COMPRESSIVE STRENGTH OF 20 MPa.(204 KSC.) FOR 15x15x15 CM. CUBE AT 28 DAYS, CEMENT SHALL CONFORM TO TIS. 15 TYPE I PORTLAND CEMENTOR APPROVAL TYPE.
3. REINFORCING STEEL SHALL CONFORM TO TIS. 20 GRADE SR 24 FOR ROUND BARS.
4. CLEAR CONCRETE COVER SHALL BE 5 CM.
5. MEDIAN DROP INLET WITH SINGLE GUTTER SHALL BE CONSTRUCTED WHEN DROP INLET IS ON GRADE.
6. MEDIAN DROP INLET WITH DOUBLE GUTTER SHALL BE CONSTRUCTED WHEN DROP INLET IS IN A SAG BETWEEN TWO GRADES.
7. MEDIAN DITCH TO BE WARPED TO TIE SMOOTHLY INTO INLET GUTTER.

REF.	REVISION	SIGNATURE	DATE

KINGDOM OF THAILAND

MINISTRY OF TRANSPORT
DEPARTMENT OF HIGHWAYS

STANDARD DRAWING

DROP INLET IN MEDIAN
TYPE D : FOR DEPRESS MEDIAN – II

DESIGNED : D.O.H. & CONSULTANTS	CHECKED : BUREAU OF LOCATION & DESIGN	DATE : OCT 2015
SUBMITTED : (DIRECTOR OF LOCATION & DESIGN BUREAU)		SCALE : AS SHOWN
APPROVED : (FOR DIRECTOR GENERAL)		DWG NO. DS–404
		SHEET NO. 101

D:\std dwg 2012\DS\DS-404(EXE)(00)

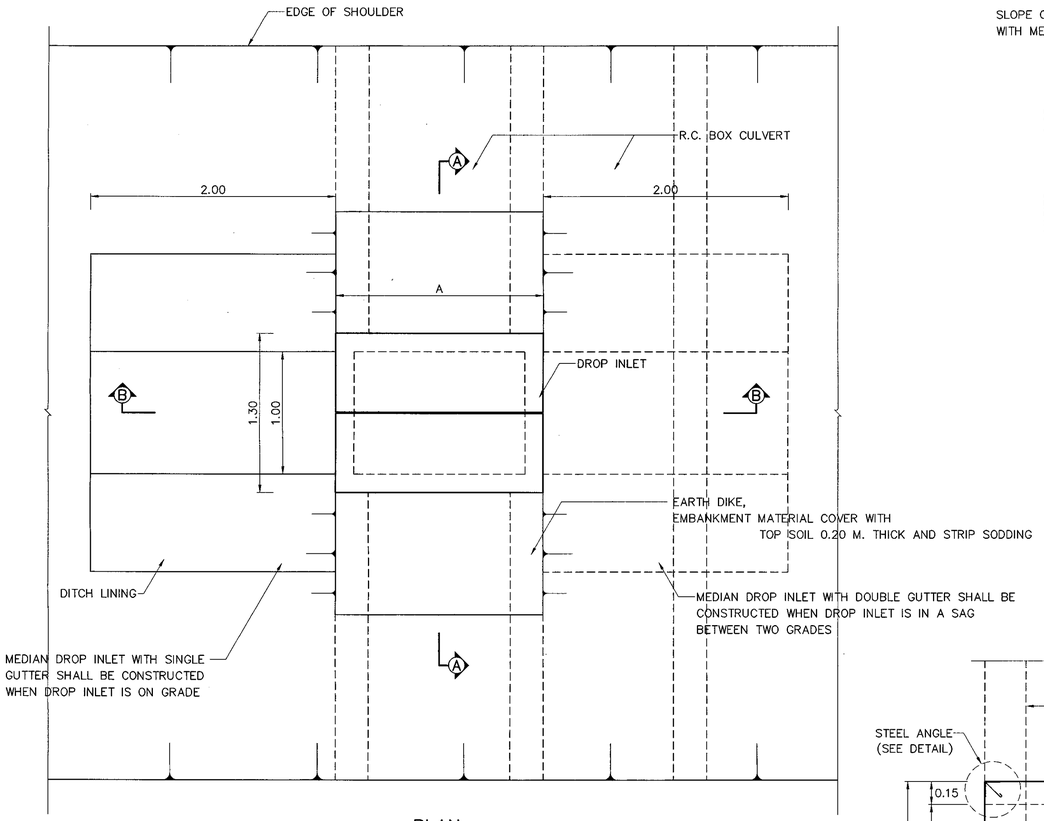

PLAN

SCALE 1 : 25

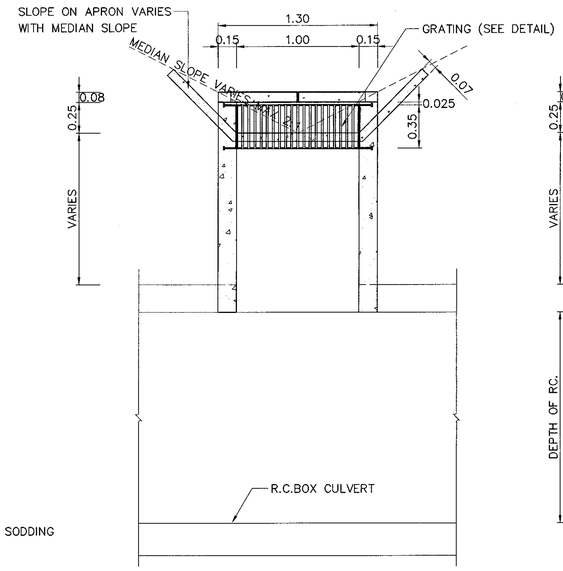

SECTION Ⓐ – Ⓐ

SCALE 1 : 25

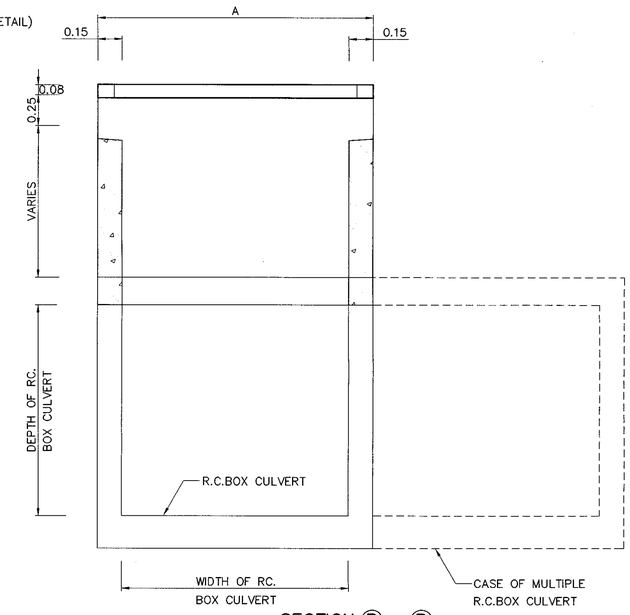

SECTION Ⓑ – Ⓑ

SCALE 1 : 25

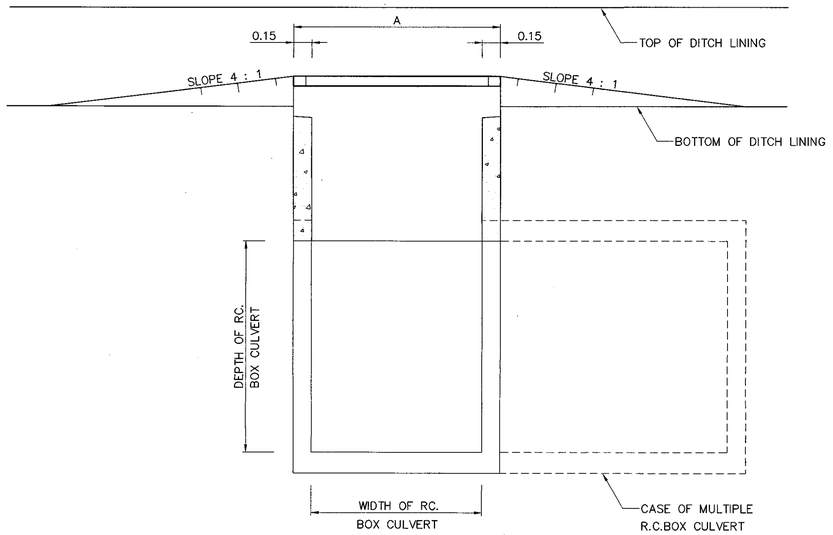

SECTION Ⓑ – Ⓑ

SCALE 1 : 25

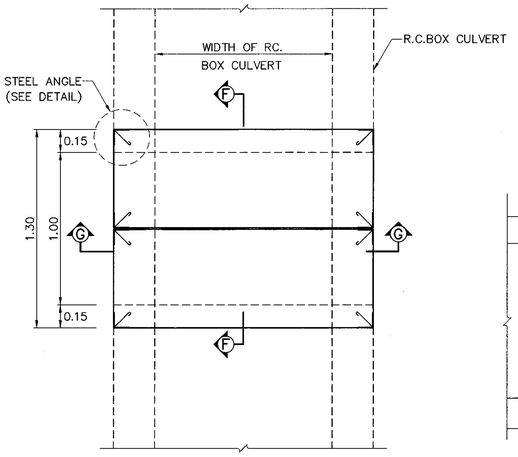

STEEL CORNER GUARD

SCALE 1 : 20

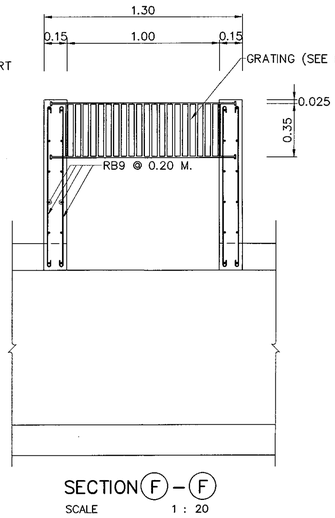

SECTION Ⓕ – Ⓕ

SCALE 1 : 20

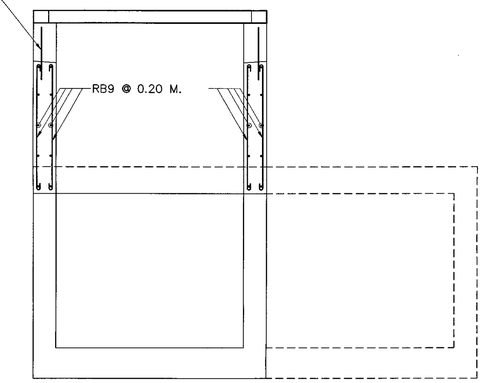

SECTION Ⓖ – Ⓖ

SCALE 1 : 20

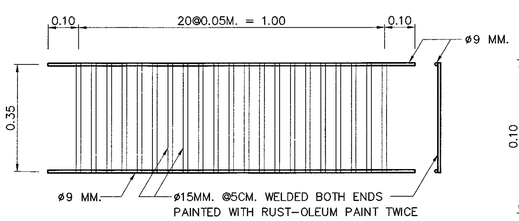

STEEL GRATING DETAILS

SCALE 1 : 10

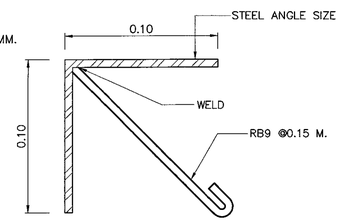

DETAIL OF STEEL ANGLE

SCALE 1 : 2

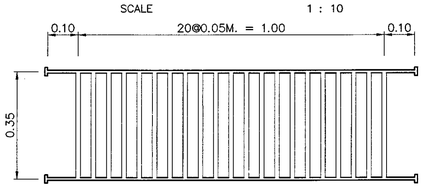

CAST–IRON GRATING DETAILS

SCALE 1 : 10

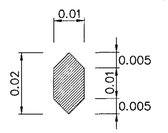

NOTE:

1. ALL DIMENSION ARE IN METERS UNLESS OTHERWISE INDICATED.
2. CONCRETE SHALL HAVE A MINIMUM ULTIMATE COMPRESSIVE STRENGTH OF 20 MPa.(204 KSC.) FOR 15x15x15 CM. CUBE AT 28 DAYS, CEMENT SHALL CONFORM TO TIS. 15 TYPE I PORTLAND CEMENTOR APPROVAL TYPE.
3. REINFORCING STEEL SHALL CONFORM TO TIS.20 GRADE SR 24 FOR ROUND BARS.
4. STRUCTURE STEEL SHALL CONFORM TO TIS.1227 GRADE SM400 AND PAINTED WITH RUST–OLEUM PANT OR EQUIVALENT IN TWO LAYERS AND WITH OIL PAINT ONCE.
5. CLEAR CONCRETE COVER SHALL BE 5 CM.
6. WIDTH OF DROP INLET (A) SHALL CONFORMED TO BOX CULVERT SIZES.

REF.	REVISION	SIGNATURE	DATE

KINGDOM OF THAILAND

MINISTRY OF TRANSPORT

DEPARTMENT OF HIGHWAYS

STANDARD DRAWING

DROP INLET IN MEDIAN

TYPE E : FOR DEPRESS MEDIAN – III (R.C. BOX CULVERT)

DESIGNED : D.O.H. & CONSULTANTS	**CHECKED :** BUREAU OF LOCATION & DESIGN	**DATE :** OCT 2015
SUBMITTED : (DIRECTOR OF LOCATION & DESIGN BUREAU)		**SCALE :** AS SHOWN
APPROVED : (FOR DIRECTOR GENERAL)		**DWG NO.** DS–405
		SHEET NO. 102

D:\std dwg 2015\DS-405(REV00)

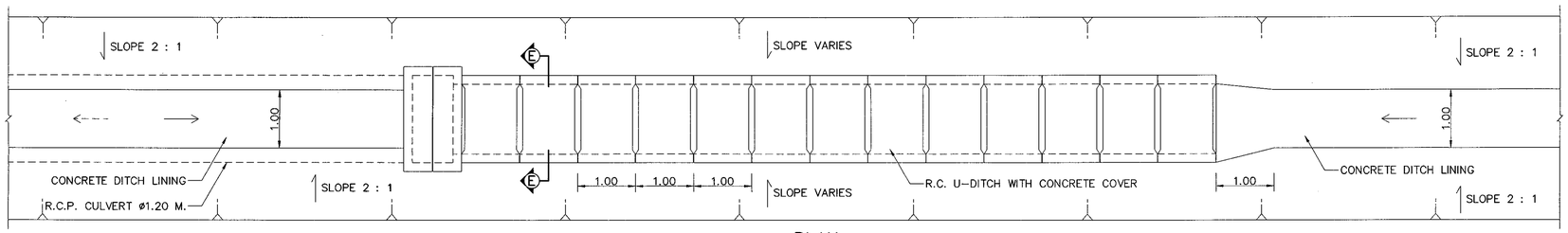

PLAN

SCALE 1 : 50

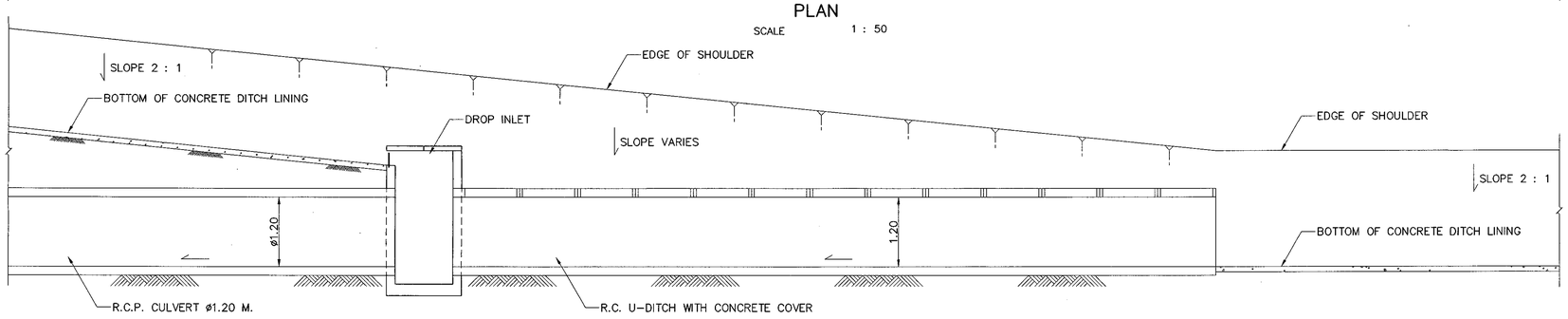

SIDE ELEVATION

SCALE 1 : 50

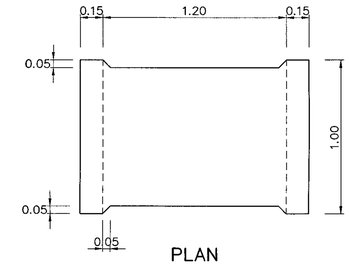

PLAN

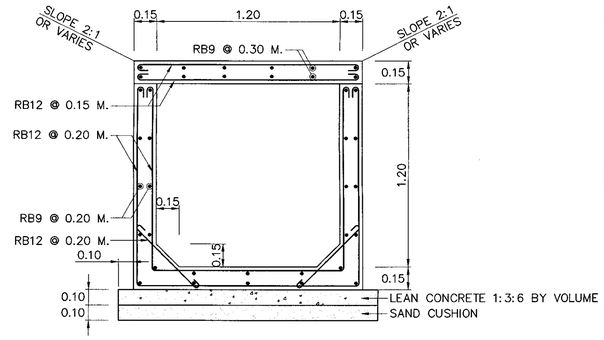

SECTION

R.C. U-DITCH WITH CONCRETE COVER

SCALE 1 : 20

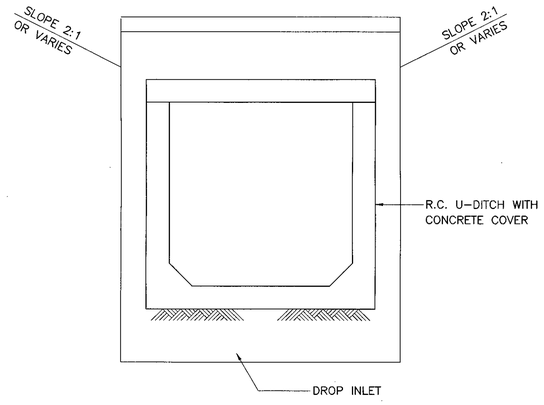

SECTION Ⓔ – Ⓔ

SCALE 1 : 20

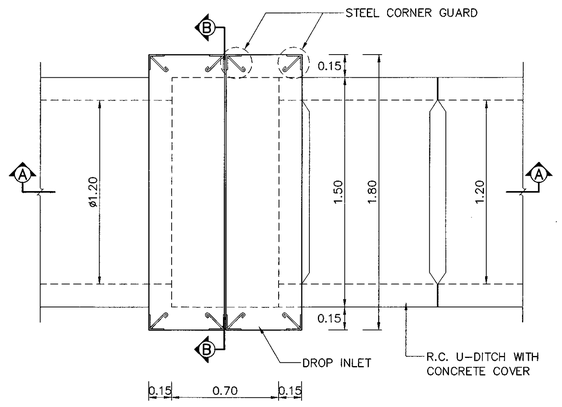

PLAN DROP INLET

SCALE 1 : 20

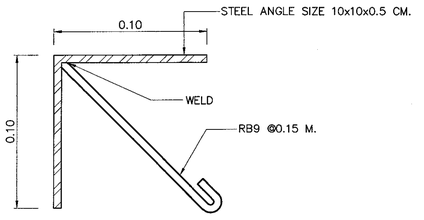

DETAIL OF STEEL ANGLE

SCALE 1 : 2

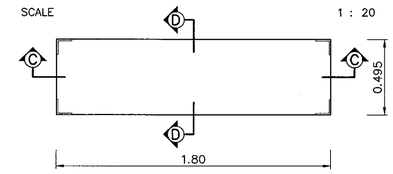

PLAN OF DROP INLET COVER

SCALE 1 : 20

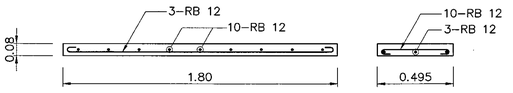

SECTION Ⓒ – Ⓒ

SCALE 1 : 20

SECTION Ⓓ – Ⓓ

SCALE 1 : 20

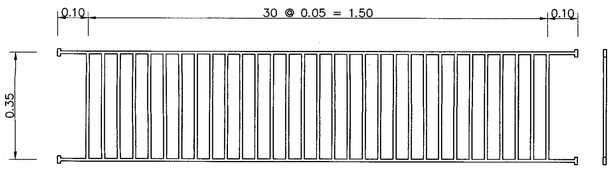

CAST – IRON GRATING DETAILS

SCALE 1 : 50

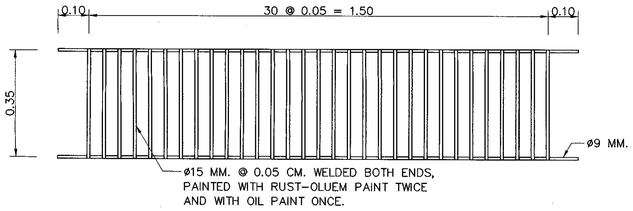

STEEL GRATING DETAILS

SCALE 1 : 50

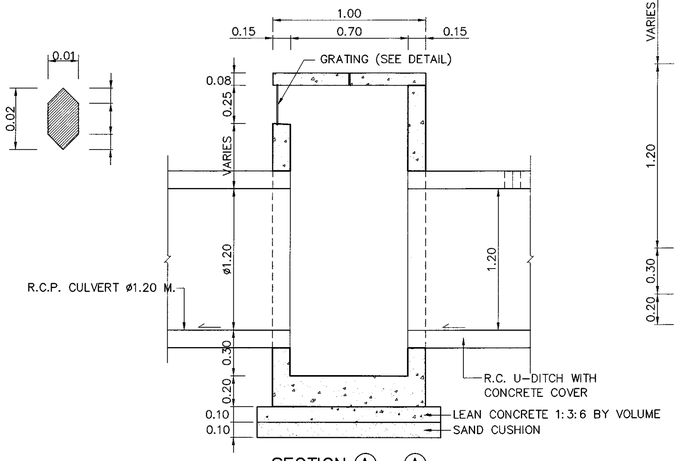

SECTION Ⓐ – Ⓐ

SCALE 1 : 20

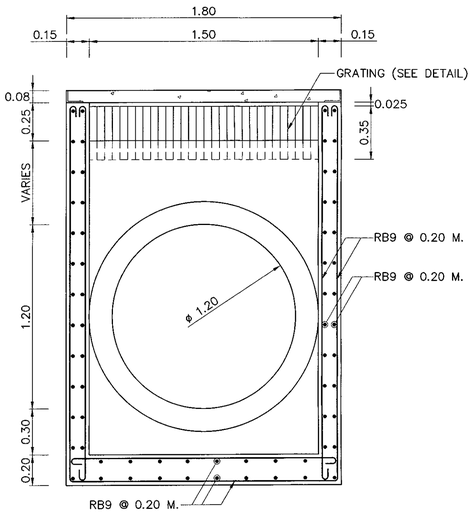

SECTION Ⓑ – Ⓑ

SCALE 1 : 20

NOTES :

1. ALL DIMENSIONS ARE IN METERS UNLESS OTHERWISE INDICATED.
2. CONCRETE SHALL HAVE A MINIMUM ULTIMATE COMPRESSIVE STRENGTH OF 20 MPa.(204 KSC.) FOR 15x15x15 CM. CUBE AT 28 DAYS, CEMENT SHALL CONFORM TO TIS. 15 TYPE I PORTLAND CEMENTOR APPRO
3. REINFORCING STEEL SHALL CONFORM TO TIS. 20 GRADE SR 24 FOR ROUN
4. THIS DRAWING SHALL BE USED WHERE THE DRAINAGE WITH CONCRETE DITCH LINING AT MEDIAN (WITH SIDE SLOPE 1.5 : 1 OR FLATTER) CAN NOT BE CONSTRUCTED
5. SLOPE OF R.C. U-DITCH COVER SHALL BE ADJUSTED TO MEET THE SIDE SLOPES.
6. JOINT IN R.C. U-DITCH AND CONCRETE DITCH LINING SHALL BE SPACED AT 10.00 M. INTERVAL. WIDTH OF THE JOINT IS 1 CM. AND FILLED WITH MORTAR (PORTLAND CEMENT : SAND) RATIO 1 : 3 BY VOLUME
7. R.C.P. CULVERT 1–ø1.20 M. SHALL BE INSTALLED WITH DROP INLET AT 25.00 M. INTERVAL.
8. SLOPE OF CULVERT SHALL BE 1 : 1,000 OR STEEPER

REF.	REVISION	SIGNATURE	DATE

KINGDOM OF THAILAND

MINISTRY OF TRANSPORT

DEPARTMENT OF HIGHWAYS

STANDARD DRAWING

DROP INLET IN MEDIAN

TYPE F : FOR BRIDGE DRAINAGE

DESIGNED : D.O.H. & CONSULTANTS	**CHECKED :** BUREAU OF LOCATION & DESIGN	**DATE :** OCT 2015
SUBMITTED : (DIRECTOR OF LOCATION & DESIGN BUREAU)		**SCALE :** AS SHOWN
APPROVED : (FOR DIRECTOR GENERAL)		**DWG NO.** DS–406
		SHEET NO. 103

D:\std dwg 2015\DS-406(REV00)

TABLE OF DIMENSION

DIA.	NO. OF CELL	L	L1	h1	h2	h3	w1	w2
0.60	1	4.70	1.40	0.13	0.30	0.25	0.13	0.225
0.80	1	6.00	1.70	0.16	0.40	0.30	0.16	0.300
1.00	1	7.00	2.00	0.17	0.50	0.35	0.17	0.375
1.20	1	8.00	2.30	0.19	0.50	0.35	0.19	0.375
1.50	1	9.40	2.70	0.22	0.60	0.40	0.22	0.450
0.80	2	5.30	1.50	0.13	0.40	0.25	0.13	0.300
1.00	2	6.20	1.80	0.15	0.40	0.30	0.15	0.300
1.20	2	7.00	2.00	0.16	0.50	0.30	0.16	0.375
1.50	2	8.20	2.40	0.19	0.50	0.35	0.19	0.375
0.80	3	6.10	1.80	1.50	0.40	0.30	1.50	0.300
1.00	3	7.20	2.10	0.17	0.50	0.35	0.17	0.375
1.20	3	8.20	2.40	0.19	0.50	0.35	0.19	0.375
1.50	3	9.60	2.80	0.21	0.60	0.40	0.21	0.450

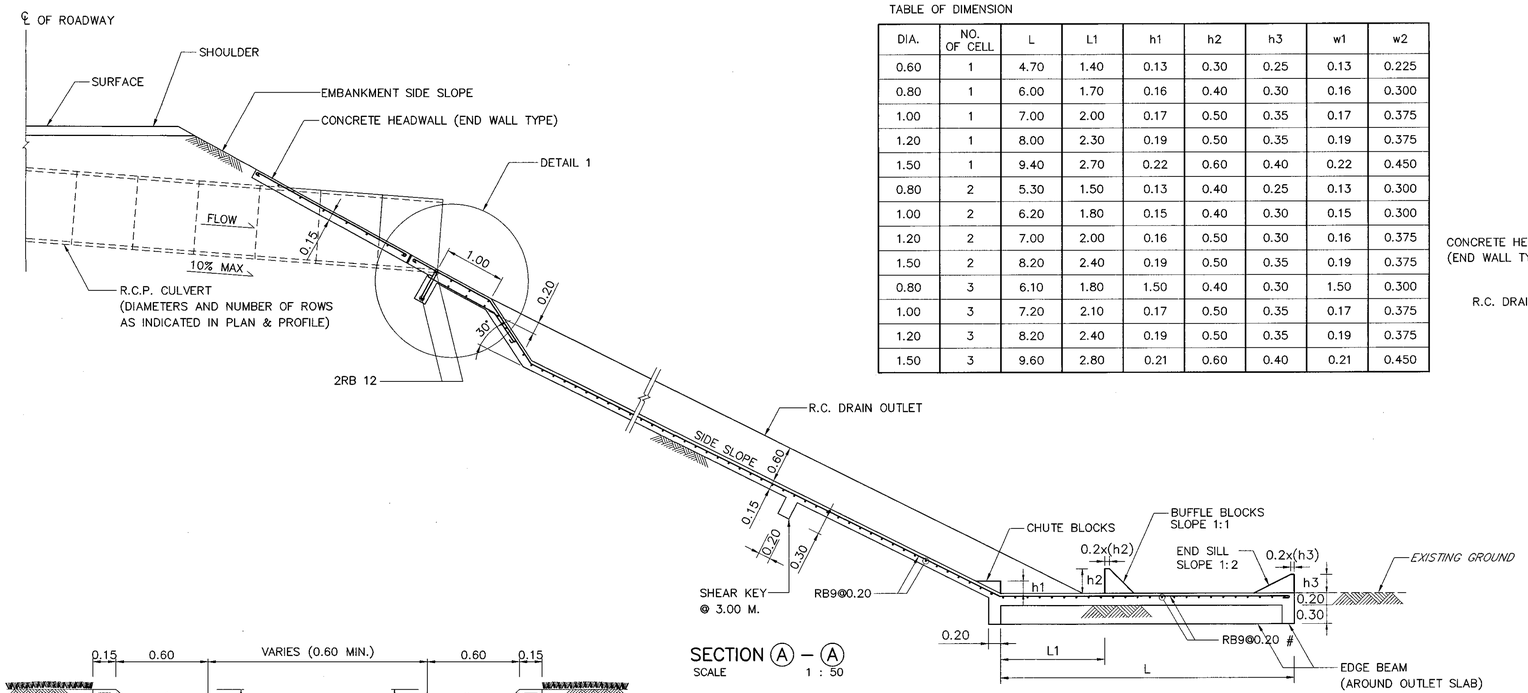

SECTION Ⓐ – Ⓐ
SCALE 1 : 50

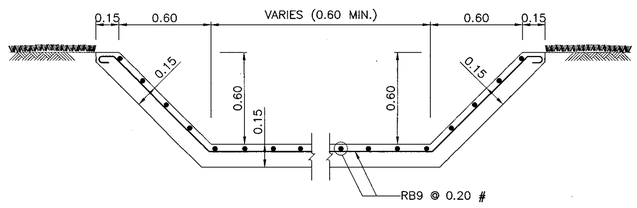

SECTION Ⓑ – Ⓑ
SCALE 1:20

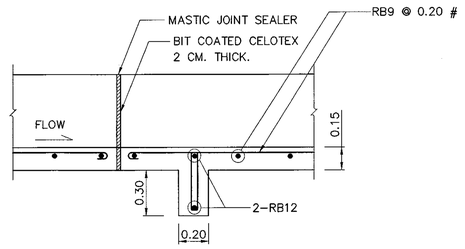

LONGITUDINAL JOINT AND SHEAR KEY
SCALE 1:20

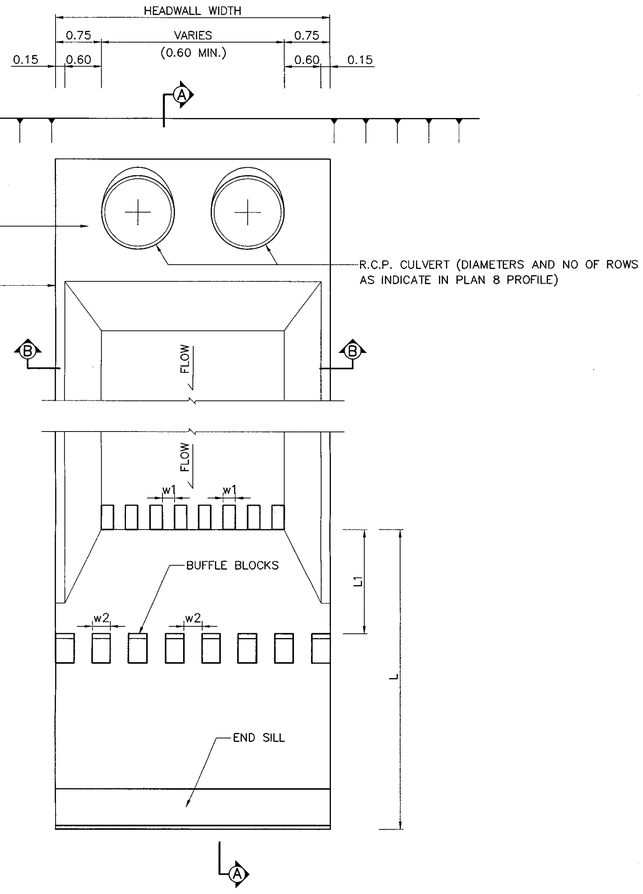

R.C. DRAIN OUTLET PLAN
SCALE 1 : 50

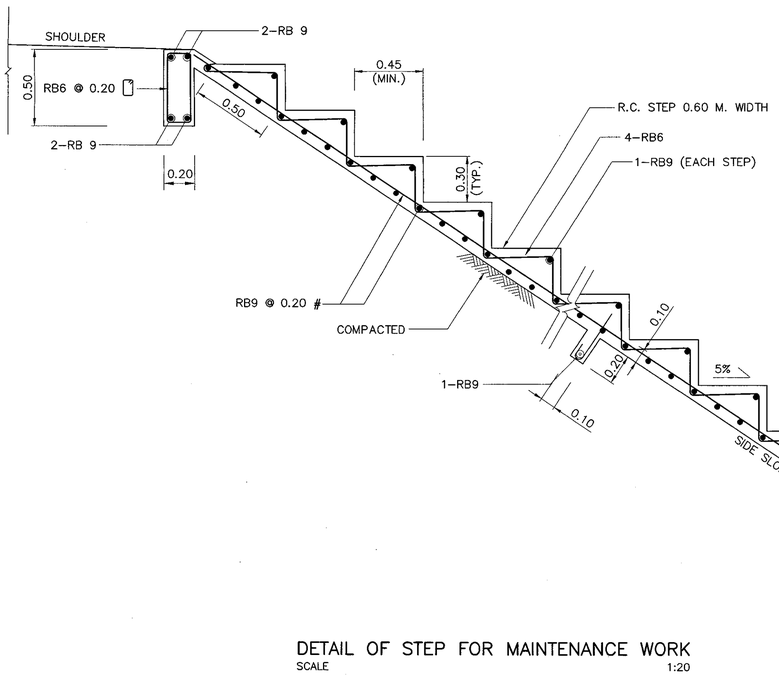

DETAIL OF STEP FOR MAINTENANCE WORK
SCALE 1:20

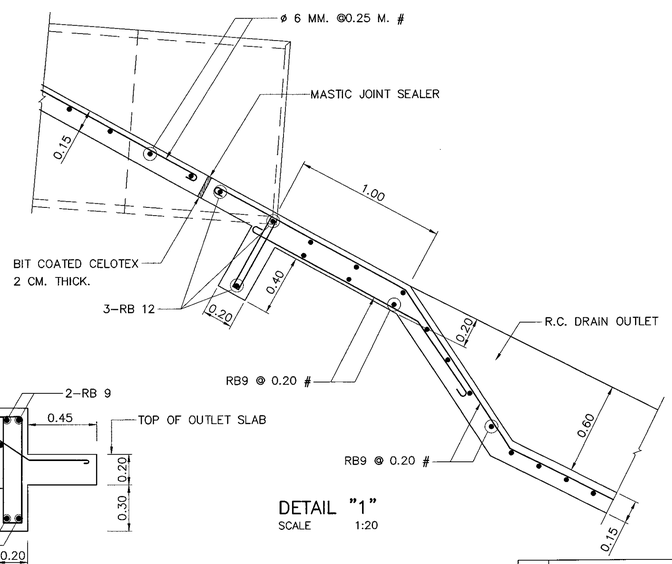

DETAIL "1"
SCALE 1:20

NOTES :

1. ALL DIMENSIONS ARE IN METERS UNLESS OTHERWISE INDICATED.
2. CONCRETE SHALL HAVE A MINIMUM ULTIMATE COMPRESSIVE STRENGTH OF 18 MPa.(184 KSC.) FOR 15x15x15 CM. CUBE AT 28 DAYS, CEMENT SHALL CONFORM TO TIS. 15 TYPE I PORTLAND CEMENTOR APPROVAL TYPE.
3. REINFORCING STEEL SHALL CONFORM TO TIS. 20 GRADE SR 24. FOR ROUND BARS.
4. WHERN THE VELOCITY OF FLOW AT TOE SLOPE MORE THAN 3.00 M/SEC. THE CHUTE BLOCKS, BAFFLE BLOCKS AND END SILL SHALL BE PROVIDED OR AS DIRECTED BY THE ENGINEER.
5. THE EMBANKMENT SLOPE SHALL BE WELL COMPACTED AND SHAPED TO THE LINE AND GRADE SHOWN ON THE PLANS.
6. THE WIDTH OF R.C. STEP IS 0.60 M. (MIN.) AND USE FOR MAINTENANCE WORK PROPOSE ONLY AS DIRECT BY THE ENGINEER.
7. THE MAINTENANCE STEP SHALL BE CONSTRUCTED ADJACENT TO THE R.C. DRAIN OUTLET AS DIRECT BY THE ENGINEER.

REF.	REVISION	SIGNATURE	DATE

KINGDOM OF THAILAND

MINISTRY OF TRANSPORT
DEPARTMENT OF HIGHWAYS

STANDARD DRAWING

R.C. DRAIN OUTLET FOR R.C.PIPE CULVERT

DESIGNED : D.O.H. & CONSULTANTS	**CHECKED :** BUREAU OF LOCATION & DESIGN	**DATE :** OCT 2015
SUBMITTED : (DIRECTOR OF LOCATION & DESIGN BUREAU)		**SCALE :** AS SHOWN
		DWG NO. DS–501
APPROVED : (FOR DIRECTOR GENERAL)		**SHEET NO.** 104

D:\std dwg 2015\DS-501(REV00)

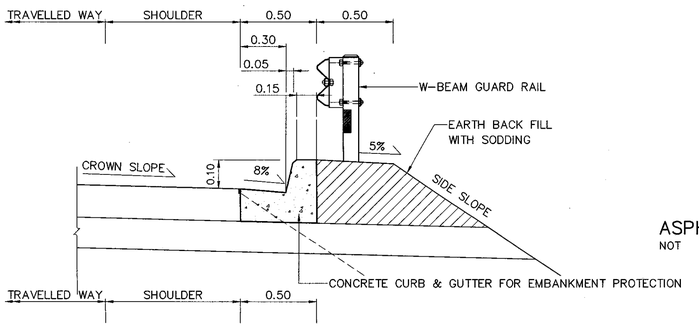

CONCRETE CURB AND ASPHALT CURB INSTALLATION
SCALE NTS

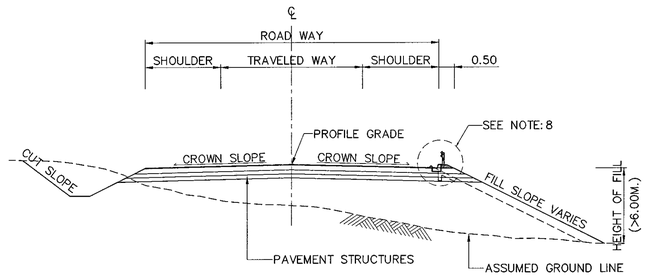

ASPHALT OR R.C. CURB FOR FILL SECTION (HEIGHT OF FILL ⩾ 6.00 M.)
NOT TO SCALE

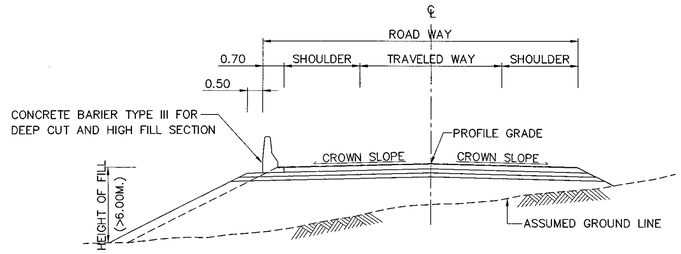

CONCRETE BARIER TYPE III FOR FILL SECTION (HEIGHT OF FILL ⩾ 6.00 M.)
NOT TO SCALE

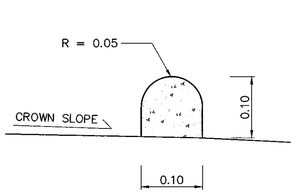

DETAIL FOR ASPHALT CURB
SCALE NTS

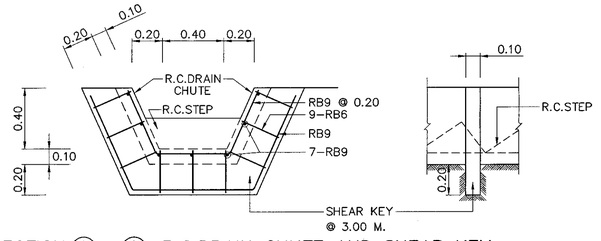

SECTION Ⓐ – Ⓐ R.C.DRAIN CHUTE AND SHEAR KEY
SCALE NTS

NOTES :

1. ALL DIMENSIONS ARE IN METERS UNLESS OTHERWISE INDICATED.
2. CONCRETE SHALL HAVE A MINIMUM ULTIMATE COMPRESSIVE STRENGTH OF 18 MPa.(184 KSC.) FOR 15x15x15 CM. CUBE AT 28 DAYS, CEMENT SHALL CONFORM TO TIS. 15 TYPE I PORTLAND CEMENTOR APPROVAL TYPE.
3. REINFORCING STEEL SHALL CONFROM TO TIS.20 GRADE SR.24 FOR ROUND BARS.
4. WHERE THE HEIGHT OF EMBANKMENT IS MORE THAN 6.00 M. ASPHALT/CONCRETE CURB OR CONCRETE BARRIER TYPE III SHALL BE PROVIDED ON NORMAL CROWN SECTION AND SHALL BE PROVIDED ON BOTH SIDES OF THE ROADWAY. FOR SUPPERELEVATED SECTION, ASPHALT/CONCRETE CURB OR CONCRETE BARRIER TYPE III SHALL BE PROVIDED ON THE INNER SIDE ONLY.
5. FOR FLAT TO 2% GRADE, R.C. DRAIN CHUTE SHALL BE SPACED AT 40 M. INTERVALS.
6. FOR GRADE MORE THAN 2% AND ALONG SAG VERTICAL CURVES, R.C. DRAIN CHUTE INTERVALS SHALL BE AS SHOWN IN TABLE 1.
7. R1, R2 AND θ SHALL BE AS DIRECTED BY THE ENGINEER.
8. TYPES OF CURB SUCH AS ASPHALT CURB OR CONCRETE CURB SHALL BE USED AT SUITABLE LOCATION AS DIRECT BY ENGINEER.

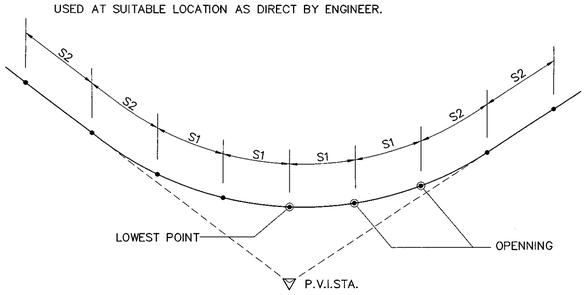

DRAIN CHUTE OPENNING ALONG SAG VERTICAL CURVE
NOT TO SCALE

TABLE 1 OPENNING INTERVAL

GRADE (%)	OPENNING INTERVALS–M.	
	S1	S2
LESS THAN 2%	30	40
2% – 3%	35	45
4 AND MORE	40	55

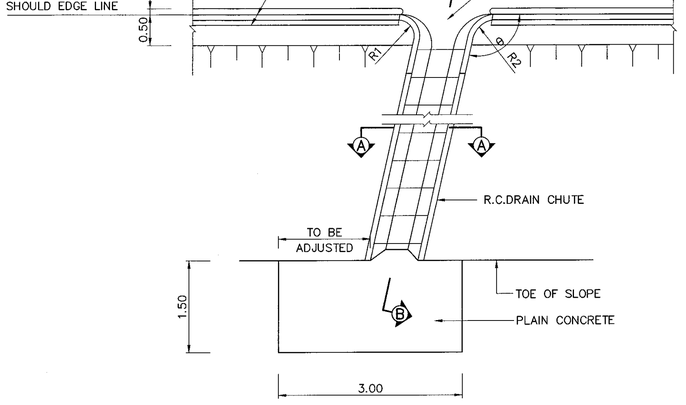

PLAN OF ASPHALT CURB AND R.C.DRAIN CHUTE
NOT TO SCALE

SECTION Ⓑ – Ⓑ R.C.DRAIN CHUTE REINFORCEMENT
NOT TO SCALE

REF.	REVISION	SIGNATURE	DATE

KINGDOM OF THAILAND

MINISTRY OF TRANSPORT
DEPARTMENT OF HIGHWAYS

STANDARD DRAWING

CURB AND DRAIN CHUTE FOR EMBANKMENT PROTECTION

DESIGNED : D.O.H. & CONSULTANTS	**CHECKED :** BUREAU OF LOCATION & DESIGN	**DATE :** OCT 2015
SUBMITTED : (DIRECTOR OF LOCATION & DESIGN BUREAU)		**SCALE :** AS SHOWN
APPROVED : (FOR DIRECTOR GENERAL)		**DWG NO.** DS–502
		SHEET NO. 105

D:\std dwg 2015\DS-502(REV00)

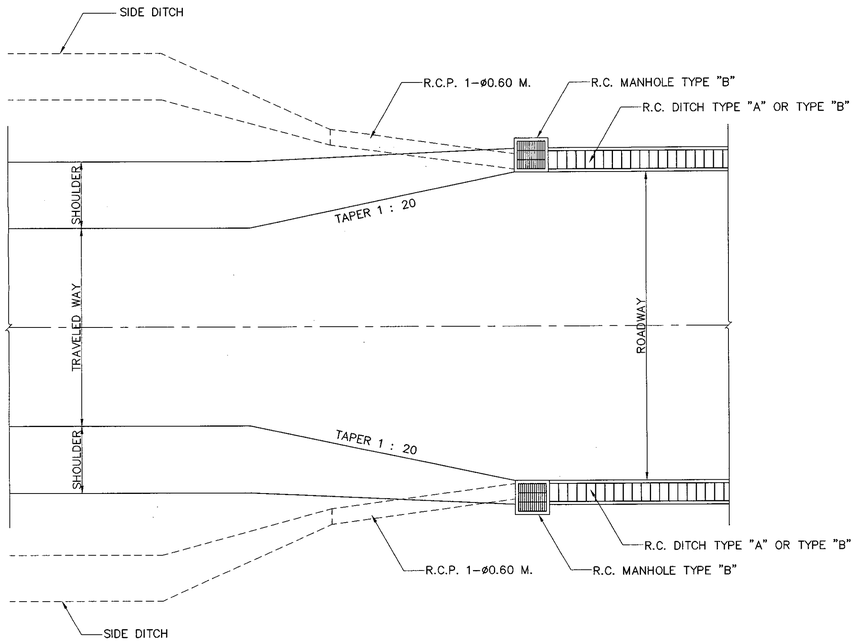

PLAN OF DRAIN CHUTE FOR R.C. DITCH TYPE "A" AND TYPE "B"

NOT TO SCALE

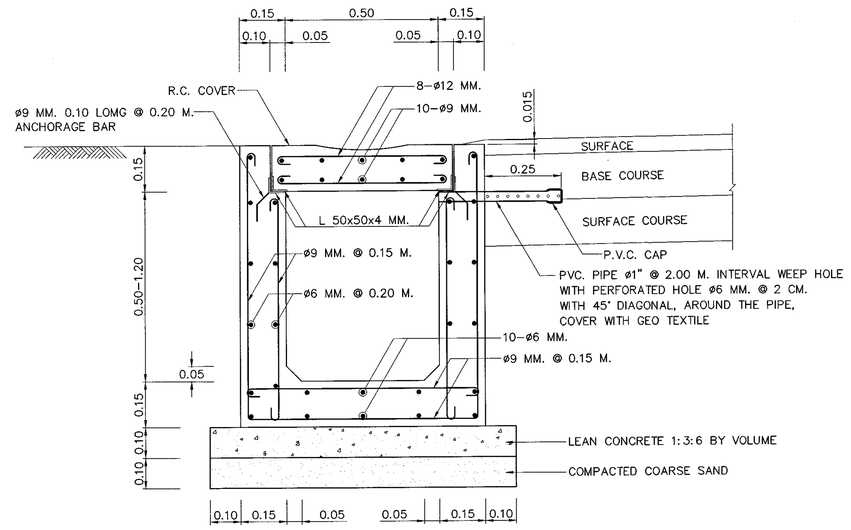

SECTION OF R.C. DITCH TYPE "A" (UNDER PAVEMENT)

SCALE 1 : 10

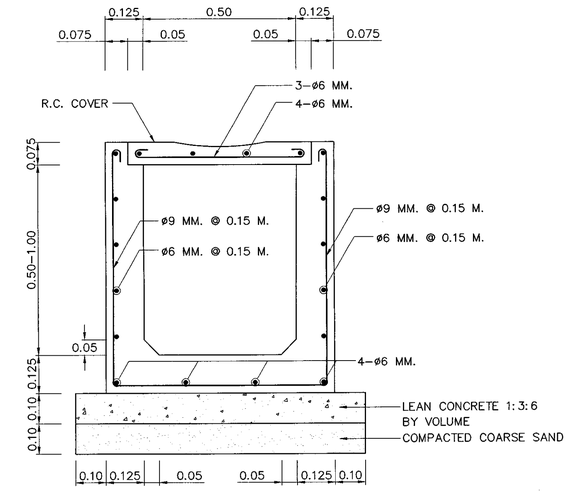

SECTION OF R.C. DITCH TYPE "B" (UNDER SIDEWALK)

SCALE 1 : 10

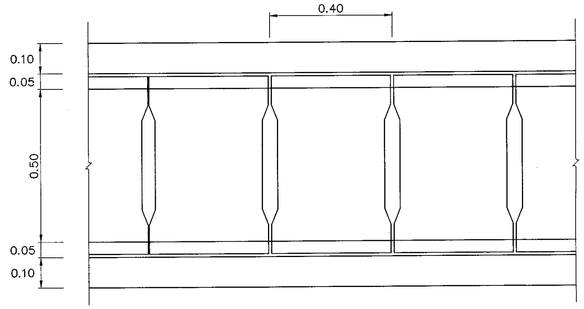

PLAN OF R.C. DITCH TYPE "A" WITH R.C. COVER

SCALE 1 : 10

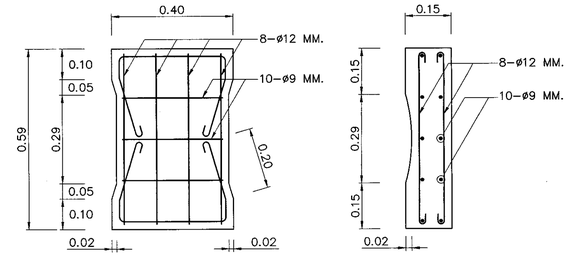

PLAN SECTION

R.C. COVER OF R.C. DITCH TYPE "A"

SCALE 1 : 10

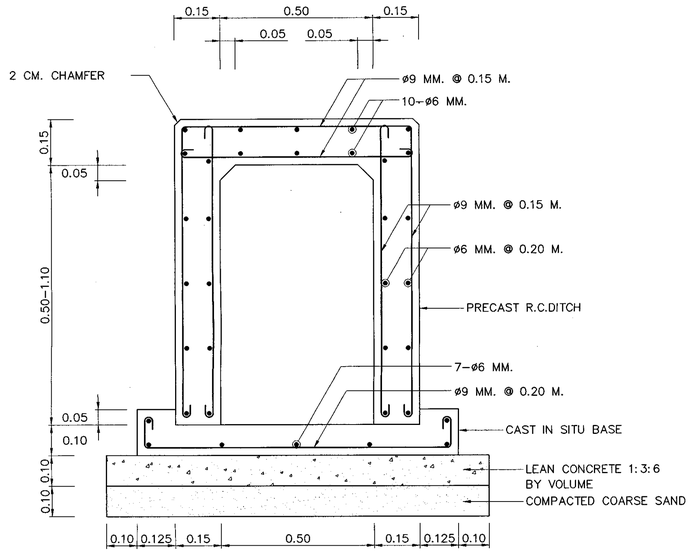

SECTION OF R.C. DITCH TYPE "A" AND TYPE "B" CROSS DRAIN AT CONNECTION ROAD

SCALE 1 : 10

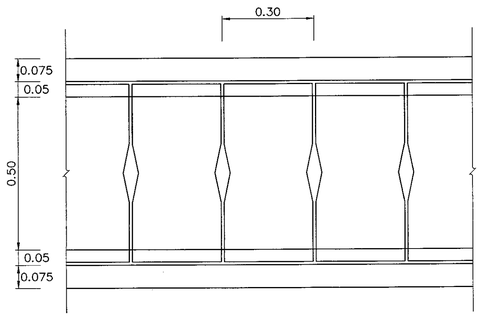

PLAN OF R.C. DITCH TYPE "B" WITH R.C. COVER

SCALE 1 : 10

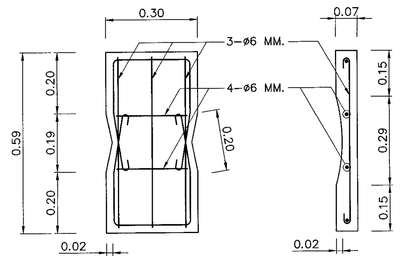

PLAN SECTION

R.C. COVER OF R.C. DITCH TYPE "B"

SCALE 1 : 10

NOTES :

1. ALL DIMENSIONS ARE IN METERS UNLESS OTHERWISE INDICATED.
2. CONCRETE SHALL HAVE A MINIMUM ULTIMATE COMPRESSIVE STRENGTH OF 20 MPa.(204 KSC.) FOR 15x15x15 CM. CUBE AT 28 DAYS, CEMENT SHALL CONFORM TO TIS. 15 TYPE I PORTLAND CEMENTOR APPROVAL TYPE.
3. REINFORCING STEEL SHALL CONFROM TO TIS. 20 GRADE SR 24 FOR ROUND BARS.
4. STRUCTURAL STEEL SHALL CONFROM TO TIS 1227 GRADE SM400 AND PAINTED WITH RUST-OLEUM PANT OR EQUIVALENT IN TWO LAYERS WITH AND OIL PAINT ONCE.
5. LAP LENGTH SHALL NOT BE LESS THAN 40 BAR DIAMETERS.
6. CLEAR CONCRETE COVER SHALL BE 3 CM. UNLESS OTHERWISE INDICATED.
7. JOINT IN R.C. DITCH TYPE "A" AND TYPE "B" SHALL BE SPACED AT 10.00 M. INTERVAL. WIDTH OF JOINT IS 1 CM. AND FILLED WITH MORTAR (PORTLAND CEMENT : SAND) RATIO 1 : 3 BY VOLUME
8. R.C. DITCH TYPE "A" AND TYPE "B" CROSS DRAIN AT CONNECTION ROAD SHALL BE PRECAST 1 M. LONG WIDTH OF THE JOINT IS 1 CM. AND FILED WITH MORTOR (PORTLAND CEMENT : SAND) RATIO 1 : 3 BY VOLUME
9. P.V.C. PIPE SHALL CONFORM TO TIS. 17 CLASS 13.5
10. PAYMENT FOR R.C. DITCH TYPE "A" SHALL INCLUDE THE COST OF P.V.C. PIPE AND FILTER MATERIAL.
11. R.C.DITCH TYPE "A" SHALL BE USED UNDER PAVEMENT.
12. R.C.DITCH TYPE "B" SHALL BE USED UNDER SIDEWALK.

KINGDOM OF THAILAND

MINISTRY OF TRANSPORT

DEPARTMENT OF HIGHWAYS

STANDARD DRAWING

R.C. U-DITCH

TYPE A & B

DESIGNED : D.O.H. & CONSULTANTS	CHECKED : BUREAU OF LOCATION & DESIGN		DATE : OCT 2015
SUBMITTED : (DIRECTOR OF LOCATION & DESIGN BUREAU)			SCALE : AS SHOWN
APPROVED : (FOR DIRECTOR GENERAL)			DWG NO. DS-601
			SHEET NO. 106

REF.	REVISION	SIGNATURE	DATE

D:\std dwg 2015\DS-601(REV00)

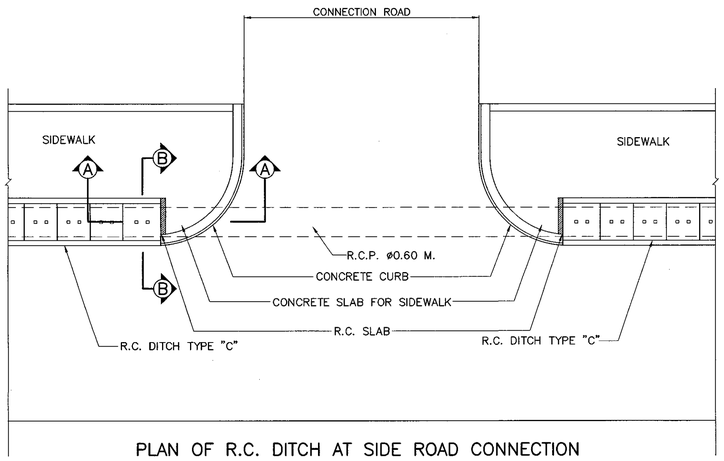

PLAN OF R.C. DITCH AT SIDE ROAD CONNECTION

NOT TO SCALE

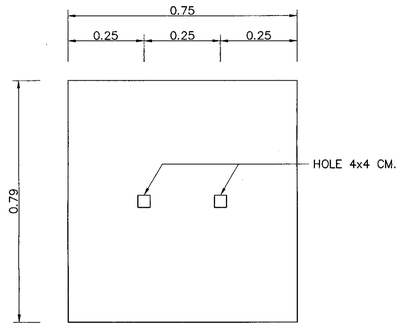

R.C. COVER

SCALE 1:10

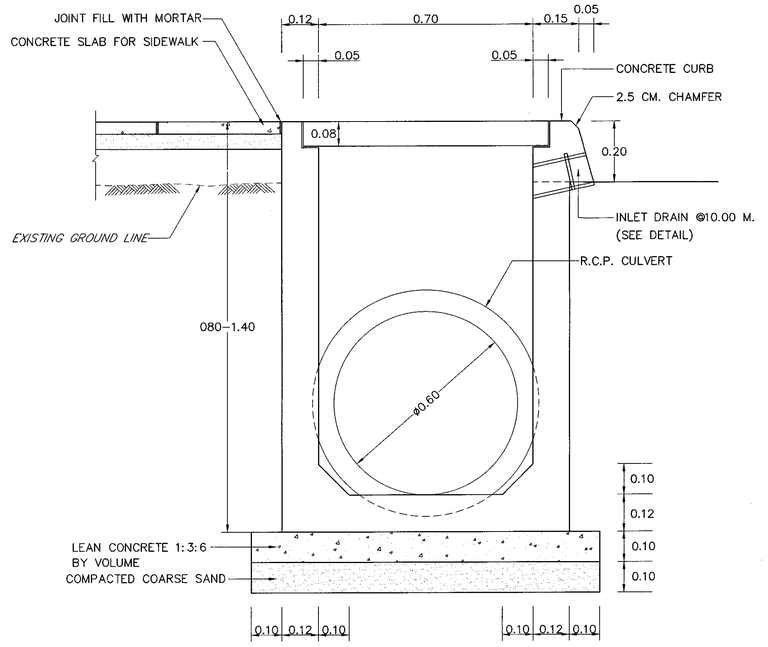

SECTION Ⓑ – Ⓑ

SCALE 1:10

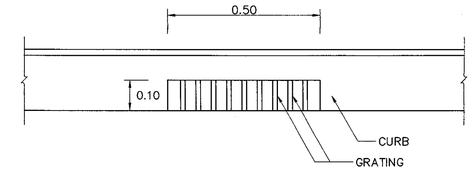

DETAIL OF INLET DRAIN

SCALE 1 : 10

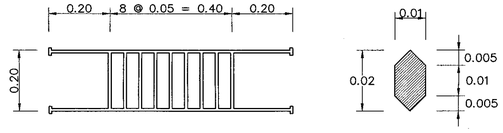

CAST – IRON GRATING FOR INLET DRAIN DETAILS

SCALE 1 : 10

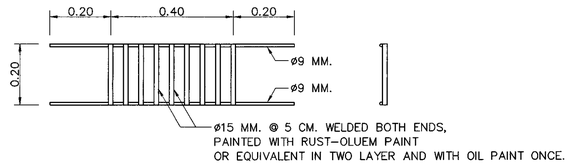

STEEL GRATING FOR INLET DRAIN DETAILS

SCALE 1 : 10

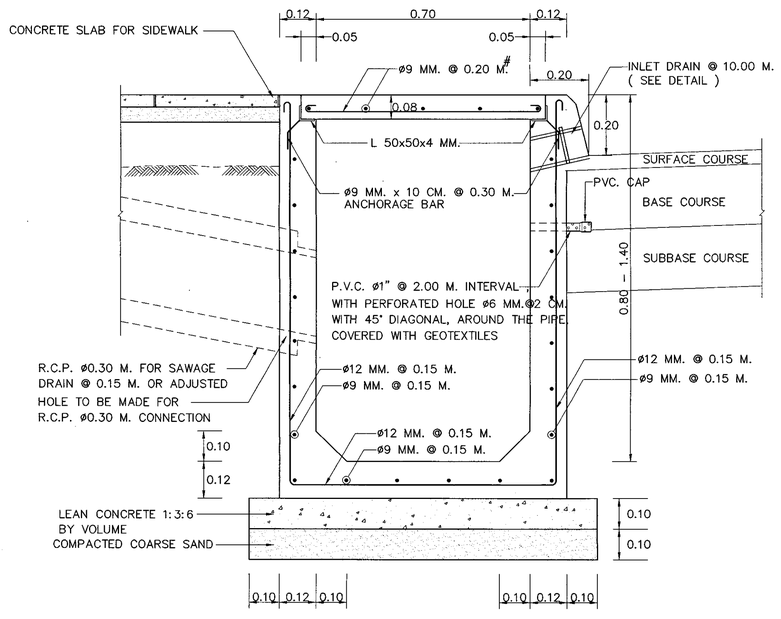

SECTION Ⓑ – Ⓑ FOR REINFORCEMENT

SCALE 1 : 10

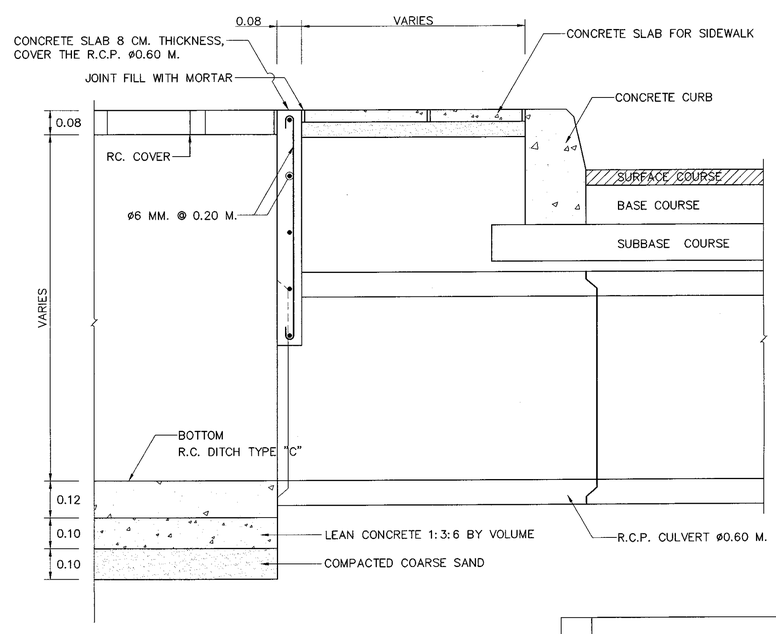

SECTION Ⓐ – Ⓐ

SCALE 1:10

NOTES :

1. ALL DIMENSIONS ARE IN METERS UNLESS OTHERWISE INDICATED.
2. CONCRETE SHALL HAVE A MINIMUM ULTIMATE COMPRESSIVE STRENGTH OF 20 MPa.(204 KSC.) FOR 15x15x15 CM. CUBE AT 28 DAYS, CEMENT SHALL CONFORM TO TIS. 15 TYPE I PORTLAND CEMENTOR APPROVAL TYPE.
3. REINFORCING STEEL SHALL CONFROM TO TIS. 20 GRADE SR 24 FOR ROUND BARS.
4. STRUCTURAL STEEL SHALL CONFROM TO TIS. 1227 GRADE SM400 PAINTED WITH RUST–OLEUM PAINT OR EQUIVALENT IN TWO LAYERS.
5. LAP LENGTH SHALL NOT BE LESS THAN 40 BAR DIAMETERS
6. CLEAR CONCRETE COVER SHALL BE 3 CM. UNLESS OTHERWISE INDICATED
7. JOINT IN R.C. GUTTER AND RC. DITCH TYPE "C" SHALL BE SPACED AT 10.00 CM. INTERVAL. WIDTH OF JOINT IS 1 CM. AND FILLED WITH MORTAR (PORTLAND CEMENT : SAND) RATIO 1 : 3 BY VOLUME
8. THE LONGITUDINAL SLOPES OF R.C. DITCH TYPE "C" SHALL NOT BE LESS THAN 1 :300
9. P.V.C. PIPE SHALL CONFORM TO TIS. 17 CLASS 13.5
10. PAYMENT FOR R.C. DITCH TYPE "C" SHALL INCLUDE THE COST OF P.V.C. PERFORATED PIPE AND FILTER MATERIAL.

KINGDOM OF THAILAND

MINISTRY OF TRANSPORT

DEPARTMENT OF HIGHWAYS

STANDARD DRAWING

R.C. U–DITCH

TYPE C

DESIGNED : D.O.H. & CONSULTANTS	**CHECKED :** BUREAU OF LOCATION & DESIGN	**DATE :** OCT 2015
SUBMITTED : (DIRECTOR OF LOCATION & DESIGN BUREAU)		**SCALE :** AS SHOWN
APPROVED : (FOR DIRECTOR GENERAL)		**DWG NO.** DS–602
		SHEET NO. 107

REF.	REVISION	SIGNATURE	DATE

D:\std dwg 2015\DS-602(REV00)

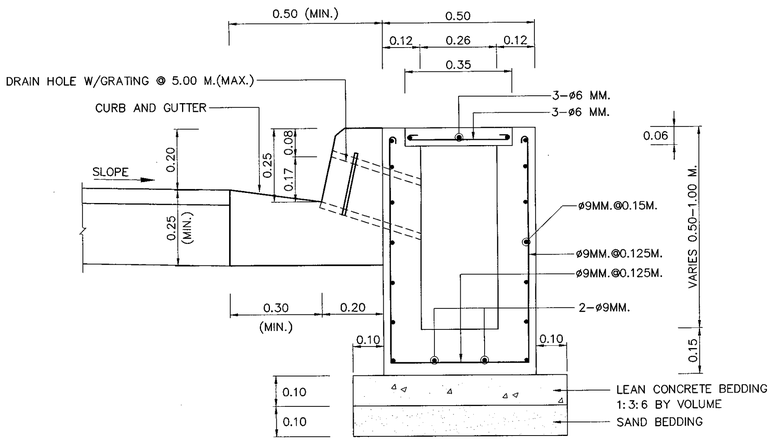

R.C. DITCH TYPE "D"

SCALE 1 : 10

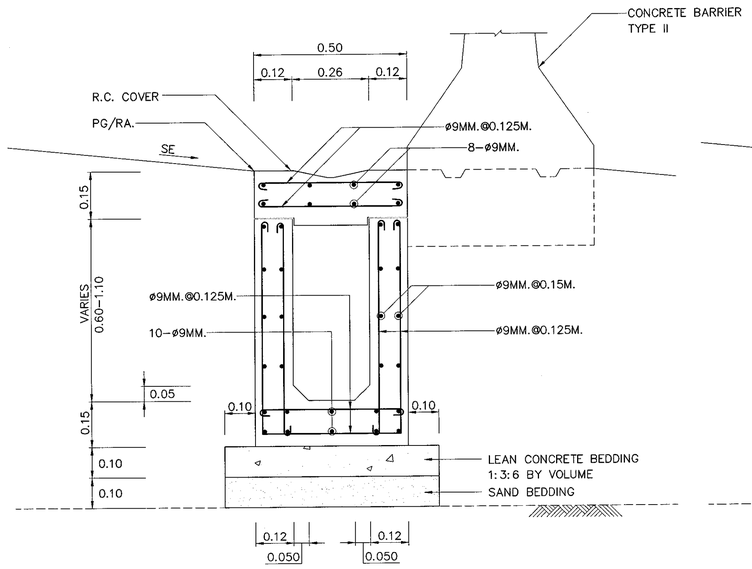

R.C. DITCH TYPE "E" WITH R.C. COVER

SCALE 1 : 10

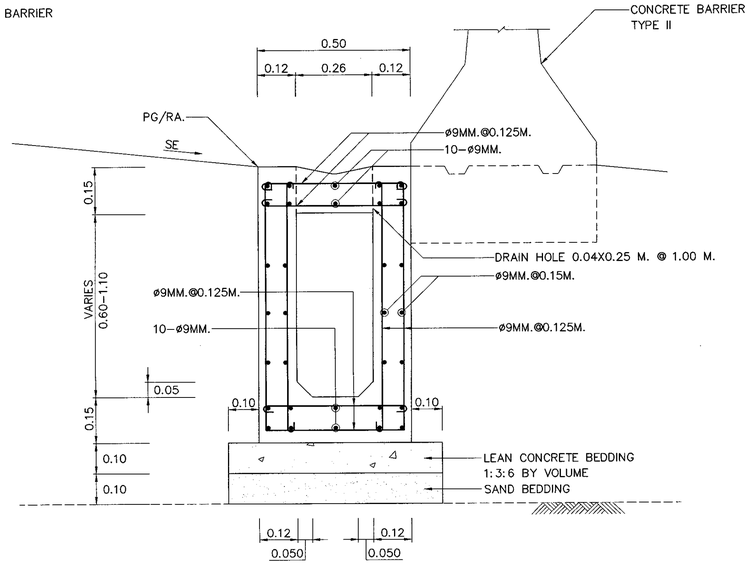

R.C. DITCH TYPE "E" (CAST IN PLACE)

SCALE 1 : 10

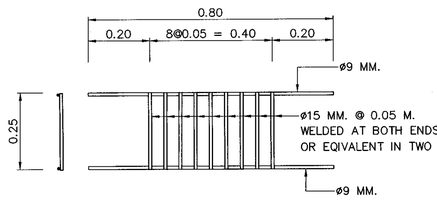

GRATE BAR DETAILS

SCALE 1 : 10

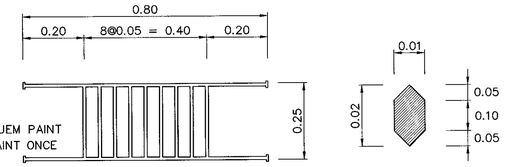

CAST-IRON GRATING DETAILS

SCALE 1 : 10

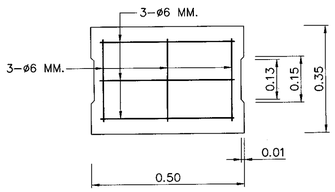

R.C. DITCH TYPE "D" COVER DETAILS

SCALE 1 : 10

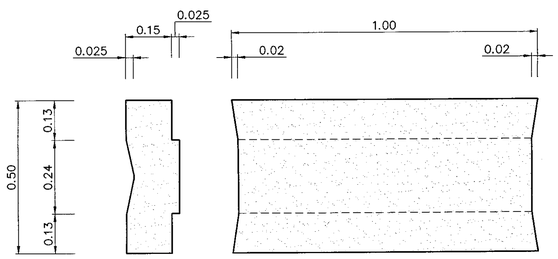

TYPICAL R.C. COVER OF R.C. DITCH TYPE "E"

SCALE 1 : 10

NOTES :

1. ALL DIMENSIONS ARE IN METERS UNLESS OTHERWISE INDICATED.
2. CONCRETE SHALL HAVE A MINIMUM ULTIMATE COMPRESSIVE STRENGTH OF 20 MPa.(204 KSC.) FOR 15x15x15 CM. CUBE AT 28 DAYS, CEMENT SHALL CONFORM TO TIS. 15 TYPE I PORTLAND CEMENTOR APPROVAL TYPE.
3. REINFORCING STEEL SHALL CONFORM TO TIS 20 GRADE SR 24.
4. CLEAR CONCRETE COVER SHALL BE 3 CM.

REF.	REVISION	SIGNATURE	DATE

KINGDOM OF THAILAND

MINISTRY OF TRANSPORT

DEPARTMENT OF HIGHWAYS

STANDARD DRAWING

R.C. U-DITCH

TYPE D & E

DESIGNED : D.O.H. & CONSULTANTS	CHECKED : BUREAU OF LOCATION & DESIGN	DATE : OCT 2015
SUBMITTED : (DIRECTOR OF LOCATION & DESIGN BUREAU)		SCALE : AS SHOWN
APPROVED : (FOR DIRECTOR GENERAL)		DWG NO. DS-603
		SHEET NO. 108

D:\std dwg 2015\DS-603(REV00)

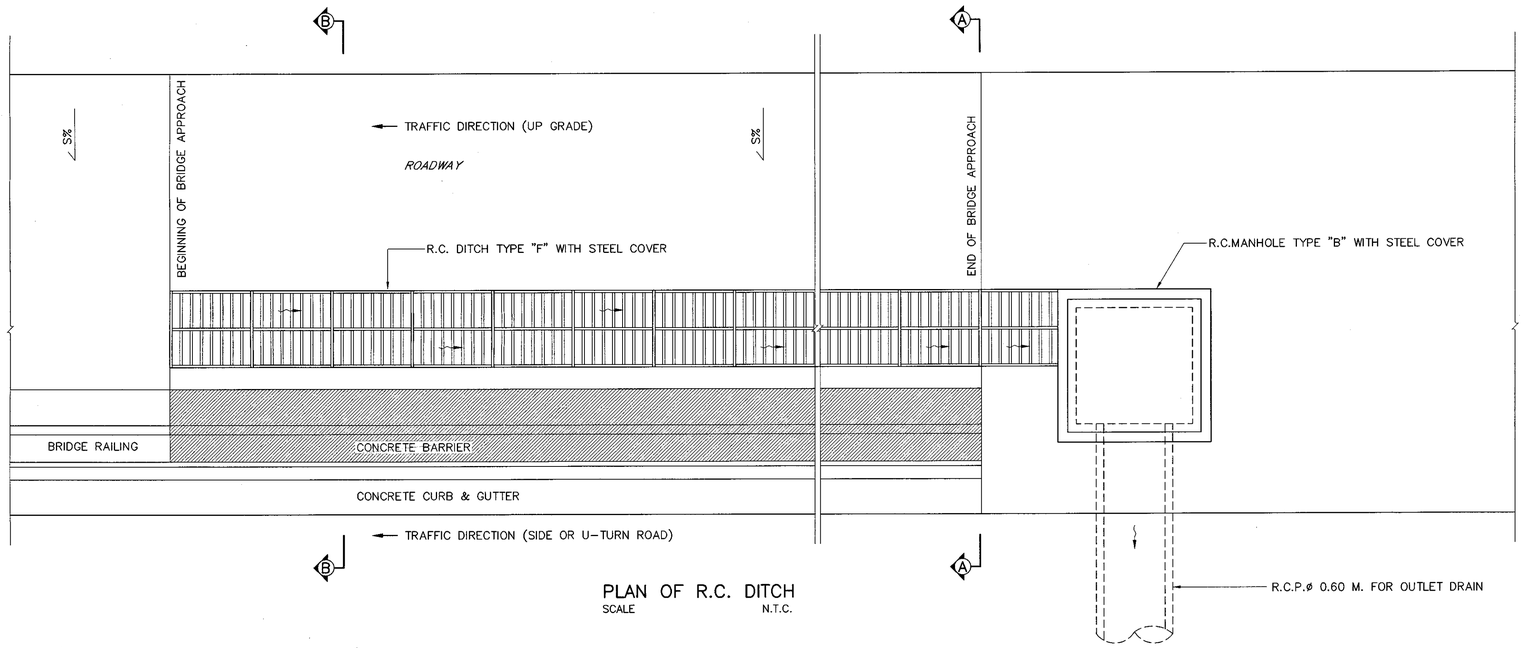

PLAN OF R.C. DITCH
SCALE N.T.C.

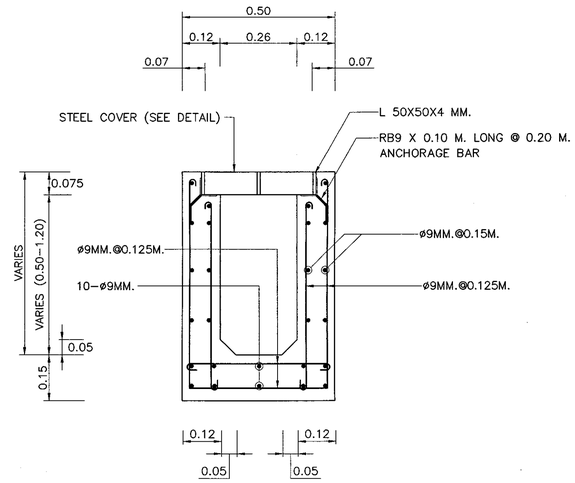

SECTION OF REINFORCEMENT
SCALE 1 : 10

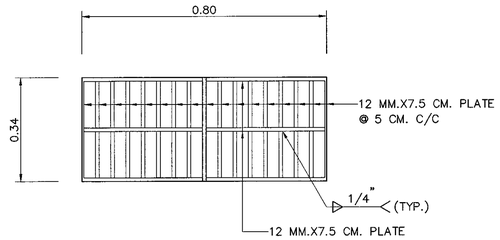

STEEL COVER DETAIL
SCALE 1 : 10

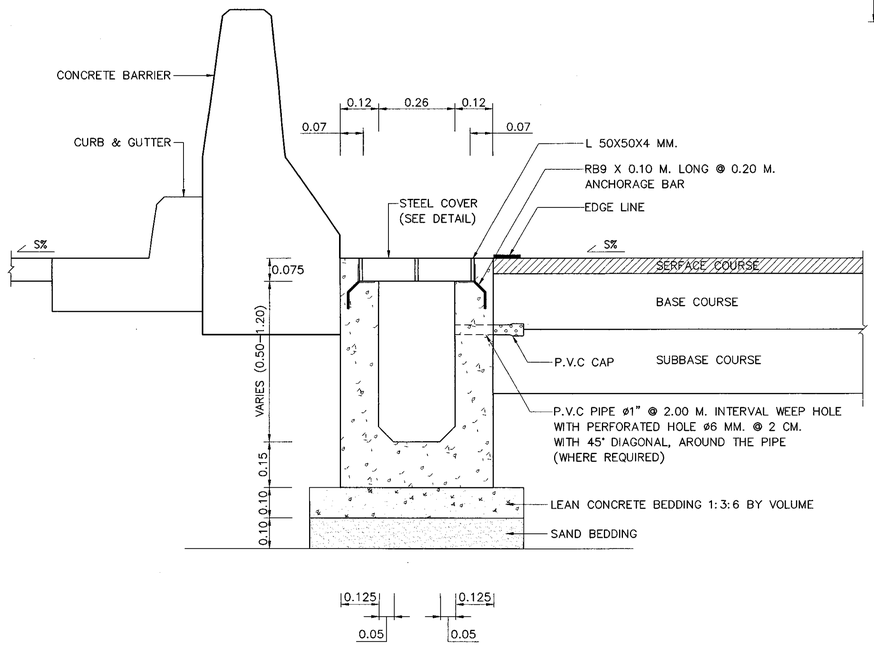

SECTION Ⓐ – Ⓐ
SCALE 1 : 10

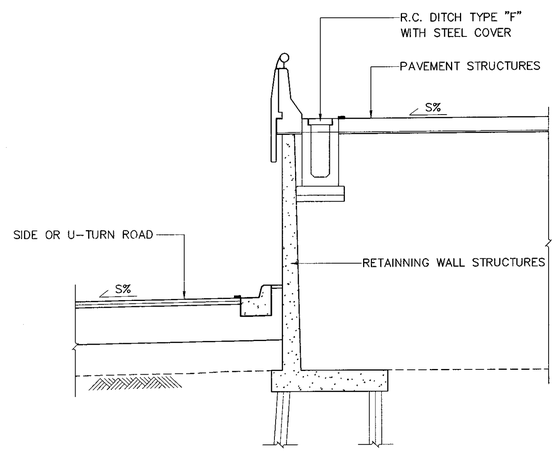

SECTION Ⓑ – Ⓑ
NOT TO SCALE

NOTES :

1. ALL DIMENSIONS ARE IN METERS UNLESS OTHERWISE INDICATED.
2. CONCRETE SHALL HAVE A MINIMUM ULTIMATE COMPRESSIVE STRENGTH OF 20 MPa.(204 KSC.) FOR 15x15x15 CM. CUBE AT 28 DAYS, CEMENT SHALL CONFORM TO TIS. 15 TYPE I PORTLAND CEMENTOR APPROVAL TYPE.
3. REINFORCING STEEL SHALL CONFORM TO TIS. 20 GRADE SR 24
4. STRUCTURAL STEEL SHALL CONFORM TO TIS. 1227 GRADE SM 400
5. FLAT PLATE STEEL SHALL CONFORM TO TIS. 1499 GRADE SM 400
6. STRUCTURAL STEEL AND FLAT PLAT STEEL SHALL BE PAINTED WITH RUST-OLEUM PAINT OR EQUIVALENT TWICE AND WITH OIL PAINT ONCE.
7. P.V.C. PIPE SHALL CONFORMING TO TIS. 17 CLASS 13.5
8. JOINT IN R.C. DITCH SHALL BE SPACED AT 10.00 M. INTERVAL WITH OF THE JOINT IS 1 CM. AND FILLED WITH MORTAR (PORTLAND CEMENT : THE JOINT IS 1:3 BY VOLUME.)
9. CAST IRON SHALL BE USED FOR THE COVER THAT CONFORM TO TIS. 537 OR ASTMA395 M-99 WITH A MAXIMUM TEST LOAD OF 40 TON SAND AND APPROVAL BY THE ENGINEER.

REF.	REVISION	SIGNATURE	DATE

KINGDOM OF THAILAND
MINISTRY OF TRANSPORT
DEPARTMENT OF HIGHWAYS

STANDARD DRAWING

R.C. U-DITCH
TYPE F : FOR BRIDGE DRAINAGE

DESIGNED : D.O.H. & CONSULTANTS	**CHECKED :** BUREAU OF LOCATION & DESIGN	**DATE :** OCT 2015
SUBMITTED : (DIRECTOR OF LOCATION & DESIGN BUREAU)		**SCALE :** AS SHOWN
		DWG NO. DS-604
APPROVED : (FOR DIRECTOR GENERAL)		**SHEET NO.** 109

D:\std dwg 2015\DS-604(REV00)

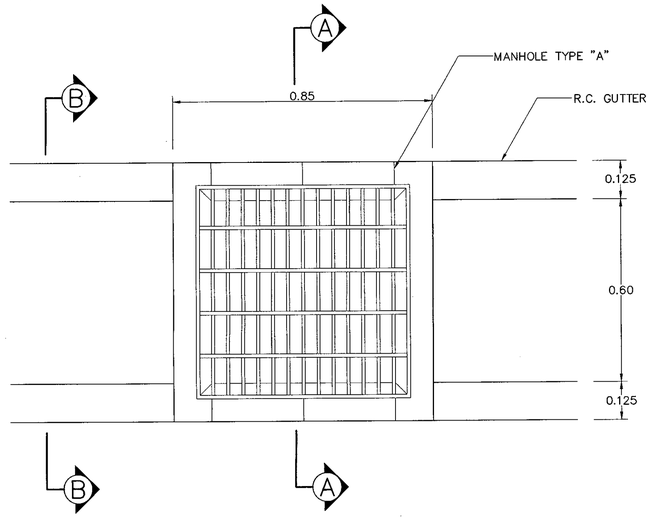

~ TRAVELLED WAY _

PLAN

SCALE 1:10

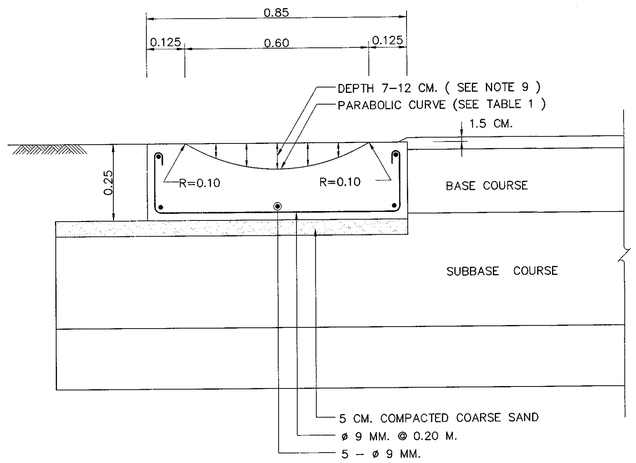

SECTION Ⓑ – Ⓑ R.C. GUTTER

SCALE 1 : 10

TABLE 1

DEPTH (CM.)	X = 10 CM. Y(CM.)	X = 20 CM. Y(CM.)
7.00	6.22	3.89
8.00	7.11	4.44
9.00	8.00	5.00
10.00	8.89	5.56
11.00	9.78	6.11
12.00	10.67	6.67

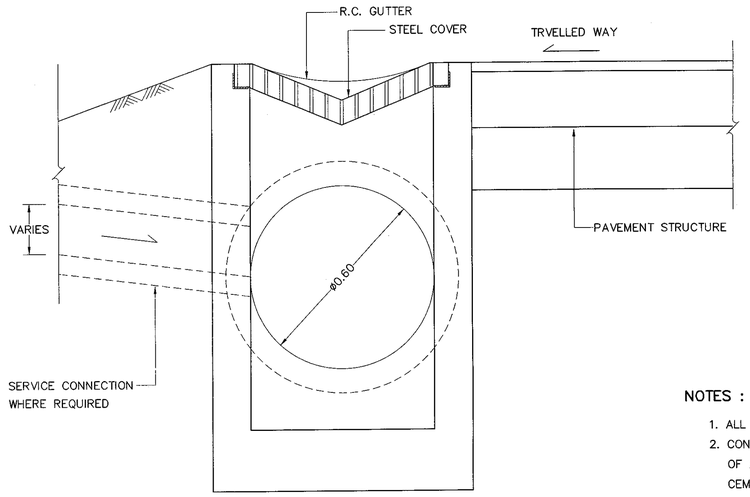

SECTION Ⓐ – Ⓐ

SCALE 1 : 10

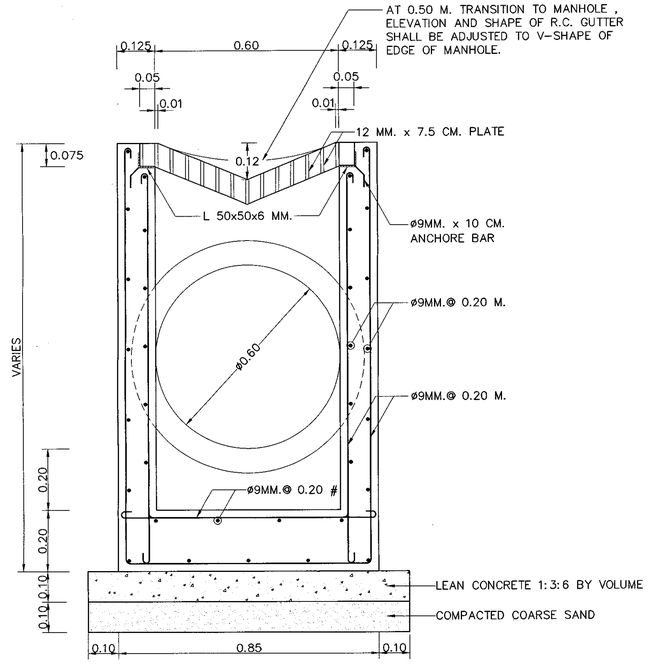

SECTION Ⓐ – Ⓐ FOR REINFORCEMENT

SCALE 1 : 10

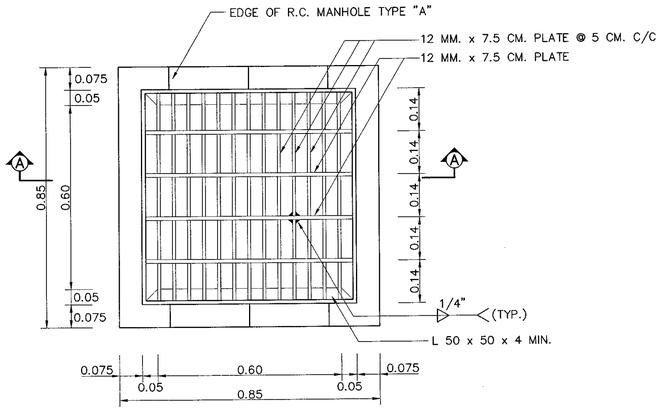

PLAN OF MANHOLE TYPE "A" WITH STEEL COVER

SCALE 1 : 10

NOTES :

1. ALL DIMENSIONS ARE IN METERS UNLESS OTHERWISE INDICATED.
2. CONCRETE SHALL HAVE A MINIMUM ULTIMATE COMPRESSIVE STRENGTH OF 20 MPa.(204 KSC.) FOR 15x15x15 CM. CUBE AT 28 DAYS, CEMENT SHALL CONFORM TO TIS. 15 TYPE I PORTLAND CEMENTOR APPROVAL TYPE.
3. REINFORCING STEEL SHALL CONFROM TO TIS. 20 GRADE SR 24
4. STRUCTURAL STEEL SHALL CONFROM TO TIS. 1227 GRADE SM 400 PAINTED WITH RUST-OLEUM PAINT OR EQUIVALENT IN TWO LAYERS AND WITH OIL PAINT ONCE.
5. FLAT PLATE STEEL SHALL CONFORM TO TIS. 1499 GRADE SM 400.
6. LAP LENGTH SHALL NOT BE LESS THAN 40 BAR DIAMETERS.
7. CLEAR CONCRETE COVER SHALL BE 3 CM. UNLESS OTHERWISE INDICATED.
8. MANHOLE TYPE "A" SHALL BE CONSTRUCTED AT 15.00 M. INTERVAL UNLESS CONNECTION ROAD WITH AMOUNT OF TRAFFICS , THE R.C. GUTTER SHALL BE VOID AT THE CONNECTION ROAD AND R.C.P. ø0.60 M. SHALL BE INSTALLED UNDER THE CONNECTION ROAD WITH MANHOLE TYPE "A" AT BOTH SIDES OF THE CONNECTION ROAD.
9. DEPTH OF R.C. GUTTER AT THE HALF DISTANCE BETWEEN MANHOLE TYPE "A" SHALL BE 7 CM. AND VARY TO BE 12 CM. AT BOTH EDGES OF MANHOLE OR THE LONGITUDINAL SLOPES SHALL NOT BE LESS THAN 0.60%.

REF.	REVISION	SIGNATURE	DATE

KINGDOM OF THAILAND

MINISTRY OF TRANSPORT

DEPARTMENT OF HIGHWAYS

STANDARD DRAWING

MANHOLE

TYPE A

DESIGNED : D.O.H. & CONSULTANTS	CHECKED : BUREAU OF LOCATION & DESIGN	DATE : OCT 2015
SUBMITTED : (DIRECTOR OF LOCATION & DESIGN BUREAU)		SCALE : AS SHOWN
APPROVED : (FOR DIRECTOR GENERAL)		DWG NO. DS-701
		SHEET NO. 110

D:\std dwg 2015\DS-701(REV00)

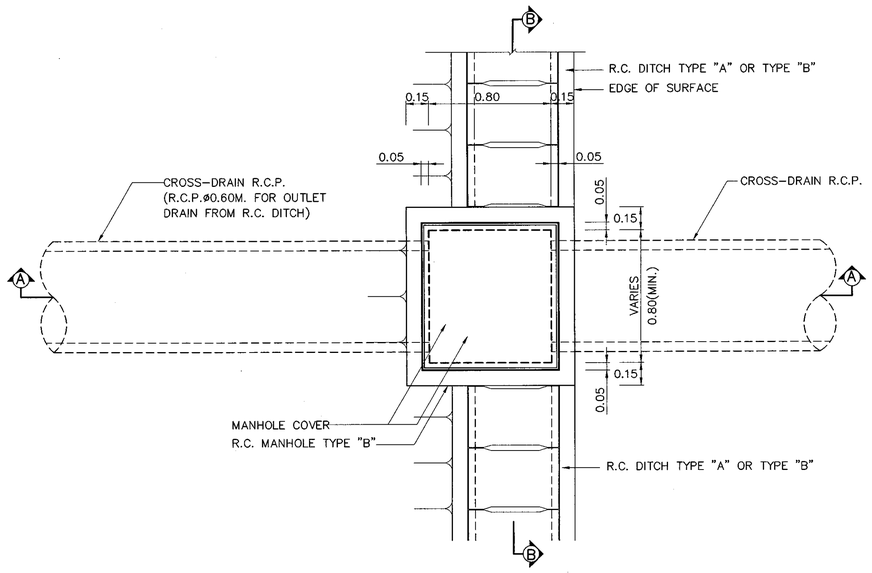

PLAN OF R.C. DITCH TYPE "A" OR TYPE "B"

WITH MANHOLE TYPE "B" AND CROSS-DRAIN PIPE CULVERT

SCALE 1 : 20

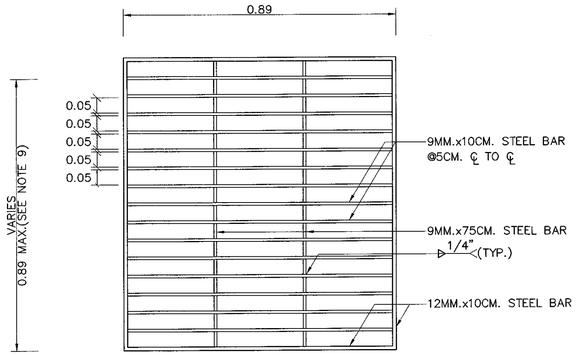

STEEL MANHOLE COVER

SCALE 1 : 10

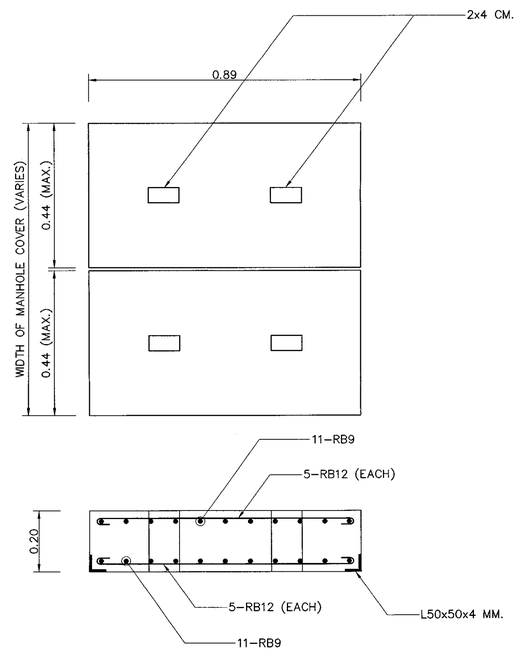

CONCRETE MANHOLE COVER

SCALE 1 : 10

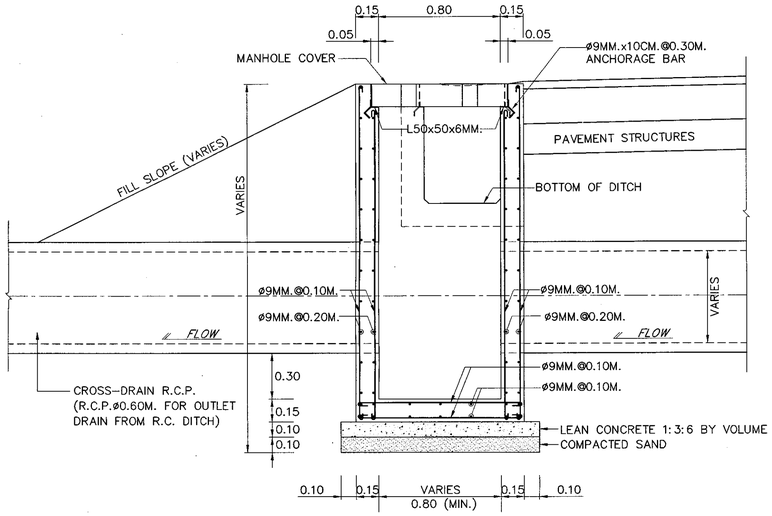

SECTION Ⓐ – Ⓐ MANHOLE TYPE "A"

SCALE 1 : 20

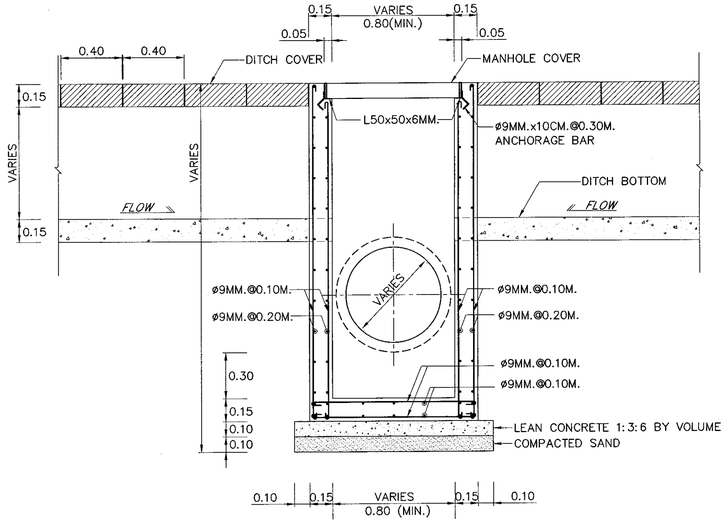

SECTION Ⓑ – Ⓑ MANHOLE TYPE "B"

SCALE 1 : 20

NOTES :

1. ALL DIMENSIONS ARE IN METERS UNLESS OTHERWISE INDICATED.
2. CONCRETE SHALL HAVE A MINIMUM ULTIMATE COMPRESSIVE STRENGTH OF 20 MPa.(204 KSC.) FOR 15x15x15 CM. CUBE AT 28 DAYS, CEMENT SHALL CONFORM TO TIS. 15 TYPE I PORTLAND CEMENTOR APPROVAL TYPE.
3. REINFORCEMENT STEEL SHALL CONFORM TO TIS. 20 GRADE SR 24
4. STRUCTURAL STEEL SHALL CONFORM TO TIS. 1227 GRADE SM 400 AND PAINTED WITH RUST-OLEUM PAINT OR EQUIVALENT IN TWO LAYER AND WITH OIL PAINT ONCE.
5. FLAT PLATE STEEL SHALL CONFORM TO TIS. 1499 GRADE SM 400.
6. LAP LENGTH SHALL NOT BE LESS THAN 40 BAR DIAMETERS.
7. CLEAR CONCRETE COVER SHALL BE 3 CM. UNLESS OTHERWISE INDICATED.
8. MANHOLE TYPE "B" SHALL BE CONSTRUCTED WHERE THE R.C. DITCH TYPE "A" OR TYPE "B" WITH CROSS-DRAIN R.C.P. OR TO DRAIN OUT.
9. IF THE WIDTH OF STEEL MANHOLE COVER IS MORE THAN 0.89 M. THE TWO STEEL MANHOLE COVERS SHALL BE USED.
10. WIDTH OF CONCRETE MANHOLE COVER NOT MORE THAN 0.44 M. EACH AND SHALL BE MINIMUM TWO COVER PER MANHOLE.

REF.	REVISION	SIGNATURE	DATE

KINGDOM OF THAILAND

MINISTRY OF TRANSPORT

DEPARTMENT OF HIGHWAYS

STANDARD DRAWING

MANHOLE

TYPE B

DESIGNED : D.O.H. & CONSULTANTS	CHECKED : BUREAU OF LOCATION & DESIGN	DATE : OCT 2015
SUBMITTED : (DIRECTOR OF LOCATION & DESIGN BUREAU)		SCALE : AS SHOWN
APPROVED : (FOR DIRECTOR GENERAL)		DWG NO. DS-702
		SHEET NO. 111

D:\std dwg 2015\DS-702(REV00)

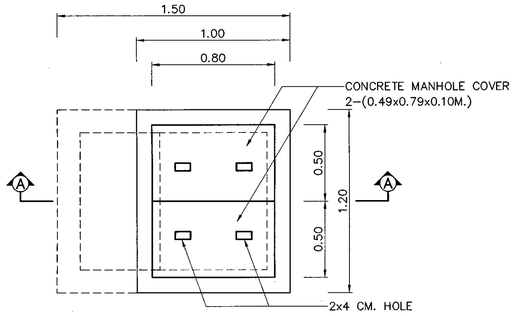

PLAN OF MANHOLE TYPE "C"
SCALE 1 : 20

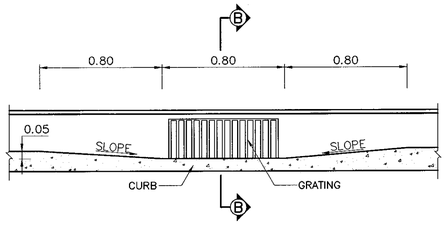

FRONT VIEW FOR INLET DRAIN
SCALE 1 : 20

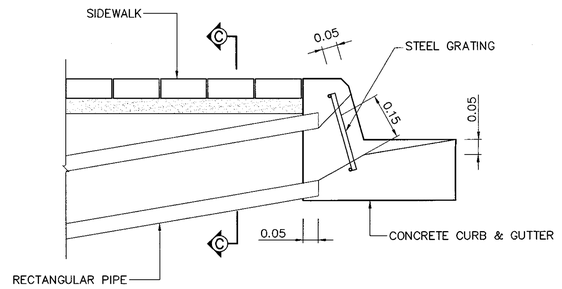

SECTION Ⓑ – Ⓑ
SCALE 1 : 10

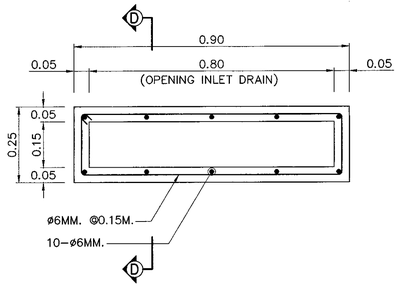

SECTION Ⓒ – Ⓒ RECTANGULAR DRAINAGE PIPE
SCALE 1 : 10

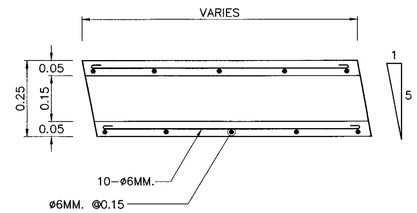

SECTION Ⓓ – Ⓓ
SCALE 1 : 10

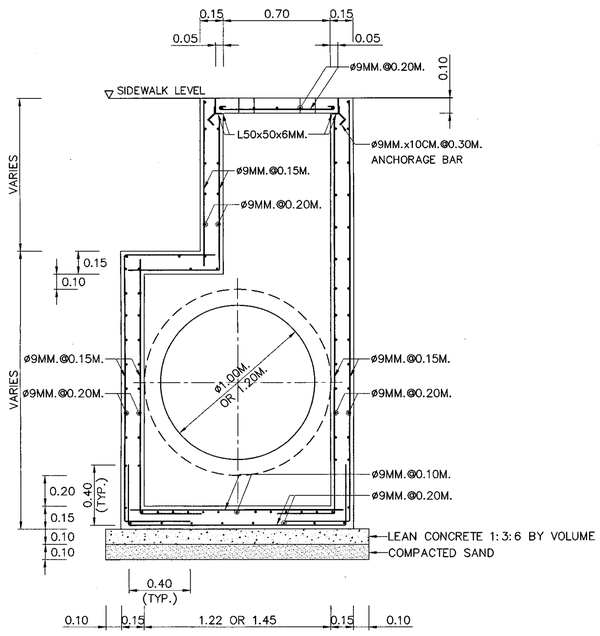

SECTION Ⓐ – Ⓐ
SCALE 1 : 20

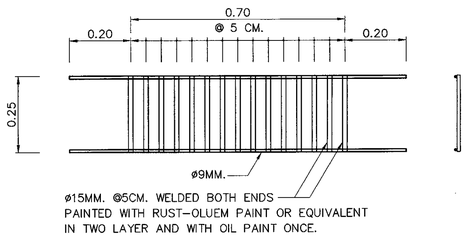

STEEL GRATING DETAILS
SCALE 1 : 10

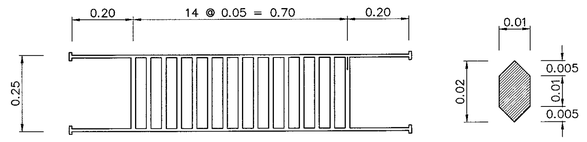

CAST-IRON GRATING DETAILS
SCALE 1 : 10

NOTES :

1. ALL DIMENSIONS ARE IN METERS UNLESS OTHERWISE INDICATED.
2. CONCRETE SHALL HAVE A MINIMUM ULTIMATE COMPRESSIVE STRENGTH OF 20 MPa.(204 KSC.) FOR 15x15x15 CM. CUBE AT 28 DAYS, CEMENT SHALL CONFORM TO TIS. 15 TYPE I PORTLAND CEMENTOR APPROVAL TYPE.
3. REINFORCEMENT STEEL SHALL CONFORM TO TIS. 20 GRADE SR 24
4. STRUCTURAL STEEL SHALL CONFORM TO TIS. 1227 GRADE SM 400
5. FLAT BAR STEEL SHALL CONFORM TO TIS. 1499 GRADE SM 400
6. STRUCTURAL STEEL STEEL SHALL BE PAINTED WITH RUST-OLEUM PAINT OR EQUIVALENT TWICE AND WITH OIL PAINT ONCE.
7. CLEAR CONCRETE COVER SHALL BE 3 CM. UNLESS OTHER WISE IN DICATED.
8. LAP LENGTH SHALL NOT BE LESS THAN 40 BAR DIAMETER.

KINGDOM OF THAILAND

MINISTRY OF TRANSPORT
DEPARTMENT OF HIGHWAYS

STANDARD DRAWING

MANHOLE
TYPE C

DESIGNED : D.O.H. & CONSULTANTS	**CHECKED :** BUREAU OF LOCATION & DESIGN	**DATE :** OCT 2015
SUBMITTED : (DIRECTOR OF LOCATION & DESIGN BUREAU)		**SCALE :** AS SHOWN
		DWG NO. DS-703
APPROVED : (FOR DIRECTOR GENERAL)		**SHEET NO.** 112

REF.	REVISION	SIGNATURE	DATE

D:\std dwg 2015\DS-703(REV00)

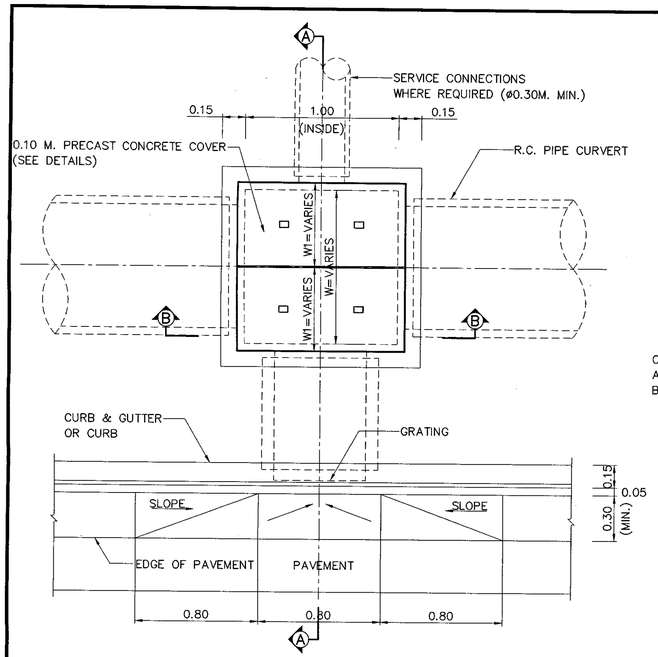

PLAN OF MANHOLE TYPE "D"
SCALE 1 : 20

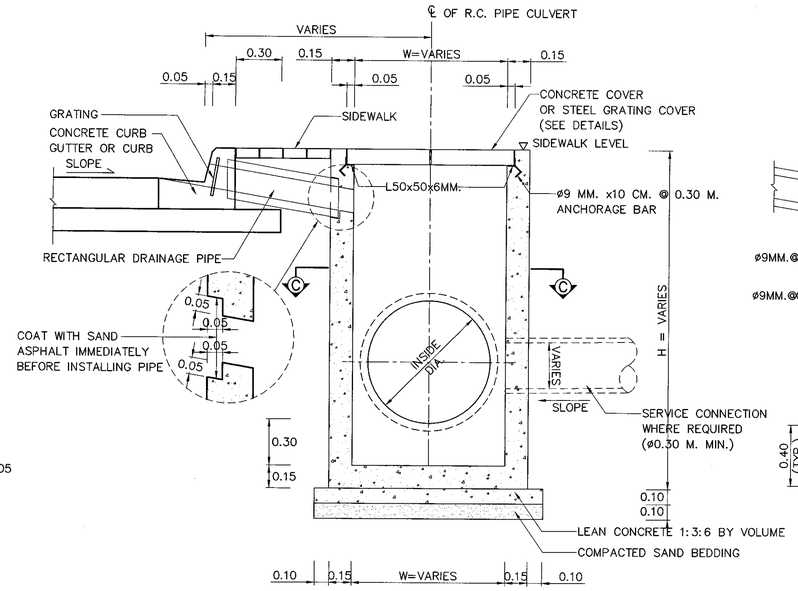

SECTION Ⓐ – Ⓐ
SCALE 1 : 20

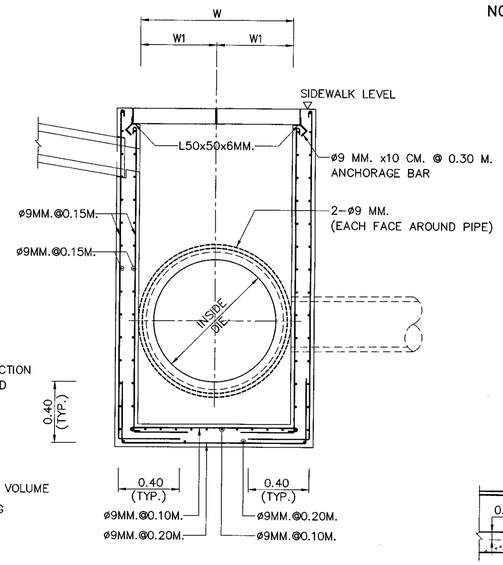

SECTION Ⓐ – Ⓐ FOR REINFORCEMENT
SCALE 1 : 20

NOTES :

1. ALL DIMENSIONS ARE IN METERS UNLESS OTHERWISE INDICATED.
2. CONCRETE SHALL HAVE A MINIMUM ULTIMATE COMPRESSIVE STRENGTH OF 20 MPa.(204 KSC.) FOR 15x15x15 CM. CUBE AT 28 DAYS, CEMENT SHALL CONFORM TO TIS. 15 TYPE I PORTLAND CEMENTOR APPROVAL TYPE.
3. REINFORCEMENT STEEL SHALL CONFORM TO TIS. 20 GRADE SR 24
4. STRUCTURAL STEEL SHALL CONFORM TO TIS. 1227 GRADE SM 400
5. FLAT BAR STEEL SHALL CONFORM TO TIS. 1499 GRADE SM 400
6. STRUCTURAL STEEL SHALL BE PAINTED WITH RUST–OLEUM PAINT OR EQUIVALENT TWICE AND WITH OIL PAINT ONCE.
7. CLEAR CONCRETE COVER SHALL BE 3 CM. OR OTHERWIS IN DICATED.
8. LAP LENGTH SHALL NOT BE LESS THAN 40 BAR DIAMETER.
9. MANHOLE SIZE SHALL VARY ACCORDING TO THE SIZE OF R.C. PIPE COLVERT (SEE TABLE 1)
10. MANHOLES SHALL BE ARRANGED AT 15.00 M.(TYP.) INTERVAL OR AS DIRECTED BY THE ENGINEER.

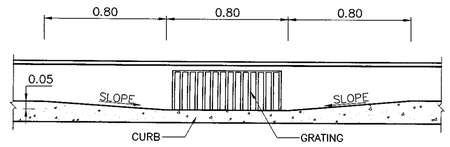

FORNT VIEW FOR GRATNG
SCALE 1 : 20

SECTION Ⓑ – Ⓑ
SCALE 1 : 20

SECTION Ⓒ – Ⓒ
SCALE 1 : 20

PLAN
SCALE 1 : 10

SECTION Ⓓ – Ⓓ
CONCRETE COVER DETAILS
SCALE 1 : 10

SECTION OF RECTANGULAR DRAINAGE PIPE
SCALE 1 : 10

SECTION Ⓔ – Ⓔ
SCALE 1 : 10

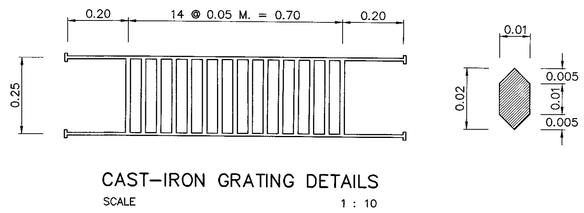

CAST–IRON GRATING DETAILS
SCALE 1 : 10

TABLE 1 MANHOLE DIMENSION

INSIDE DIA. OF R.C. PIPE CULVERT	DIMENSIONS		
	W	W1	H
ø 0.60	0.80	0.440	VARIES
ø 0.80	1.00	0.540	VARIES
ø 1.00	1.25	0.665	VARIES
ø 1.20	1.50	0.790	VARIES

STEEL GRATING COVER DETAILS
SCALE 1 : 10

STEEL GRATING DETAILS
SCALE 1 : 10

REF.	REVISION	SIGNATURE	DATE

KINGDOM OF THAILAND
MINISTRY OF TRANSPORT
DEPARTMENT OF HIGHWAYS

STANDARD DRAWING
MANHOLE
TYPE D

DESIGNED : D.O.H. & CONSULTANTS	CHECKED : BUREAU OF LOCATION & DESIGN	DATE : OCT 2015
SUBMITTED : (DIRECTOR OF LOCATION & DESIGN BUREAU)		SCALE : AS SHOWN
APPROVED : (FOR DIRECTOR GENERAL)		DWG NO. DS–704
		SHEET NO. 113

D:\std dwg 2015\DS-704(REV00)

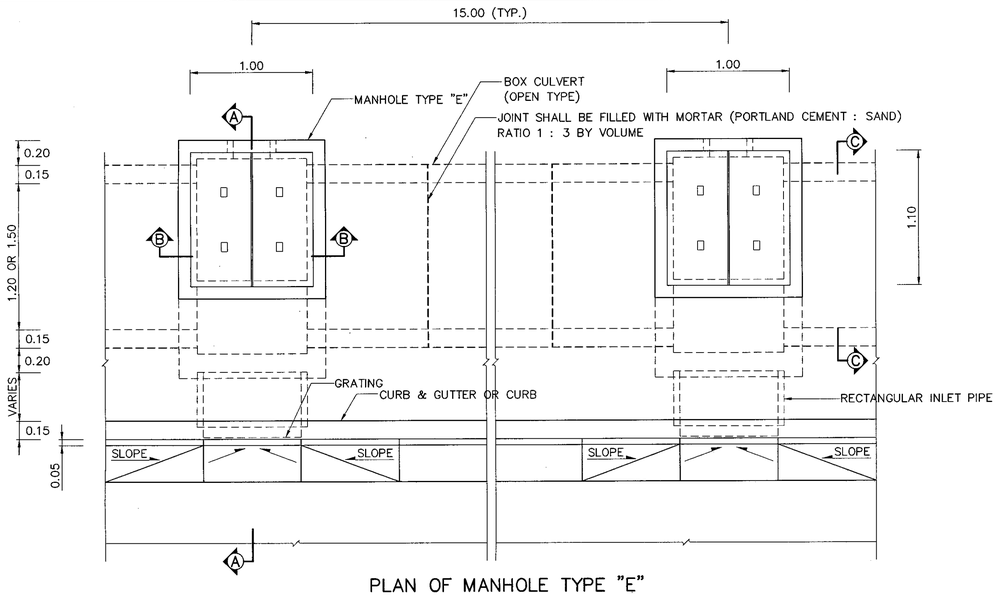

PLAN OF MANHOLE TYPE "E"

SCALE 1 : 25

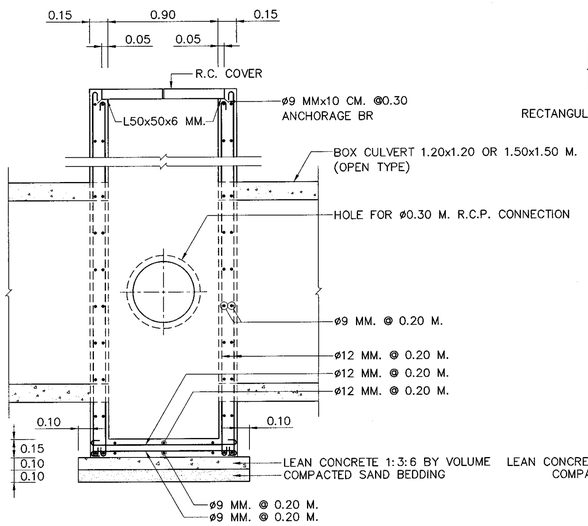

SECTION Ⓑ – Ⓑ

SCALE 1 : 25

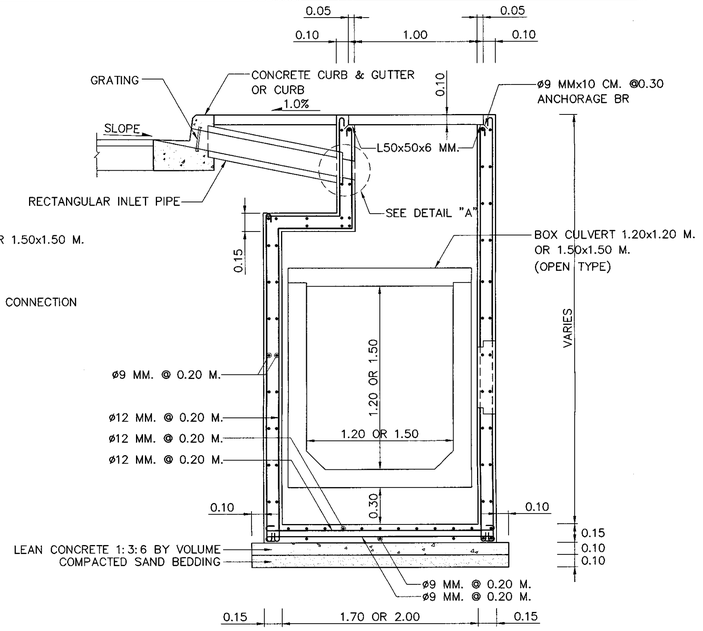

SECTION Ⓐ – Ⓐ

SCALE 1 : 25

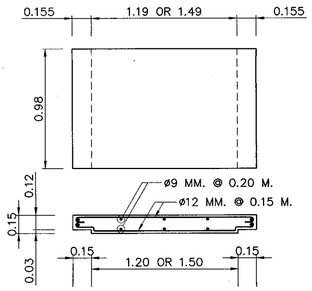

SECTION Ⓒ – Ⓒ R.C. BOX CULVERT (OPEN–TYPE)

SCALE 1 : 25

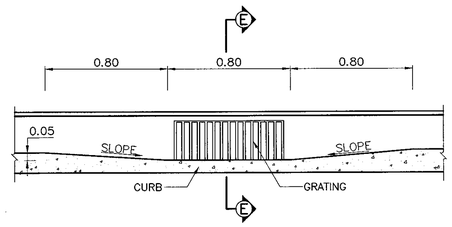

FRONT VIEW OF INLET DRAIN

SCALE 1 : 20

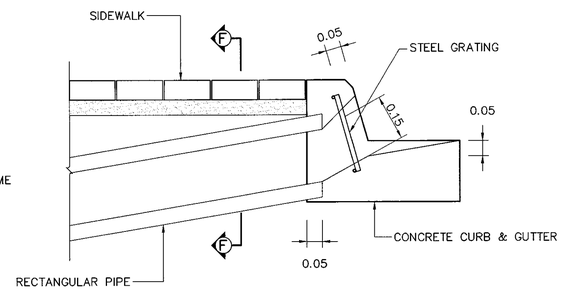

SECTION Ⓔ – Ⓔ

SCALE 1 : 10

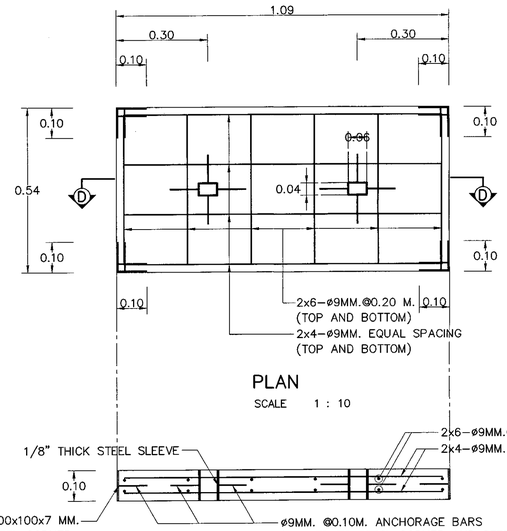

PLAN

SCALE 1 : 10

SECTION Ⓓ – Ⓓ

CONCRETE COVER DETAILS

SCALE 1 : 10

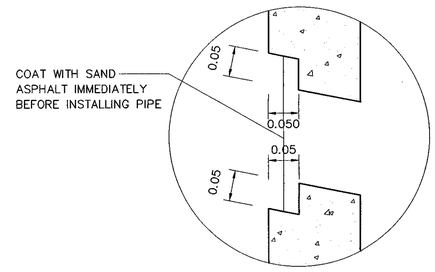

DETAIL "A"

SCALE 1 : 5

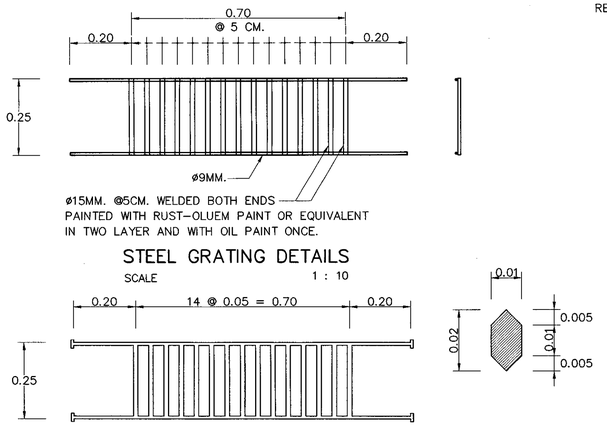

STEEL GRATING DETAILS

SCALE 1 : 10

CAST–IRON GRATING DETAILS

SCALE 1 : 10

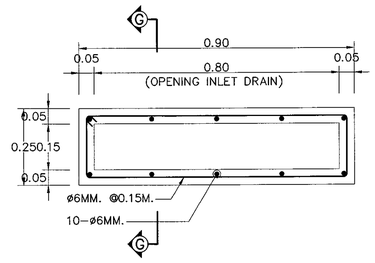

SECTION Ⓕ – Ⓕ RECTANGULAR DRAINAGE PIPE

SCALE 1 : 10

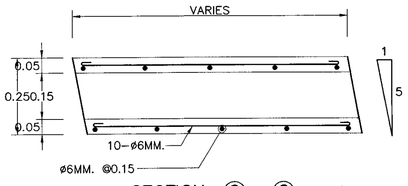

SECTION Ⓖ – Ⓖ

SCALE 1 : 10

NOTES :

1. ALL DIMENSIONS ARE IN METERS UNLESS OTHERWISE INDICATED.
2. CONCRETE SHALL HAVE A MINIMUM ULTIMATE COMPRESSIVE STRENGTH OF 20 MPa.(204 KSC.) FOR 15x15x15 CM. CUBE AT 28 DAYS, CEMENT SHALL CONFORM TO TIS. 15 TYPE I PORTLAND CEMENTOR APPROVAL TYPE.
3. REINFORCEMENT STEEL SHALL CONFORM TO TIS. 20 GRADE SR 24
4. STRUCTURAL STEEL SHALL CONFORM TO TIS. 1227 GRADE SM 400
5. FLAT BAR STEEL SHALL CONFORM TO TIS. 1499 GRADE SM 400
6. STRUCTURAL STEEL SHALL BE PAINTED WITH RUST–OLEUM PAINT OR EQUIVALENT TWICE AND WITH OIL PAINT ONCE.
7. CLEAR CONCRETE COVER SHALL BE 3 CM. OR OTHERWIS IN DICATED.
8. LAP LENGTH SHALL NOT BE LESS THAN 40 BAR DIAMETER.
9. MANHOLES SHALL BE ARRANGED AT 15.00 M.(TYP.) INTERVAL OR AS DIRECTED BY THE ENGINEER.

KINGDOM OF THAILAND

MINISTRY OF TRANSPORT

DEPARTMENT OF HIGHWAYS

STANDARD DRAWING

MANHOLE

TYPE E : FOR BOX CULVERT (OPEN–TYPE)

DESIGNED : D.O.H. & CONSULTANTS	**CHECKED :** BUREAU OF LOCATION & DESIGN	**DATE :** OCT 2015
SUBMITTED : (DIRECTOR OF LOCATION & DESIGN BUREAU)		**SCALE :** AS SHOWN
APPROVED : (FOR DIRECTOR GENERAL)		**DWG NO.** DS–705
		SHEET NO. 114

REF.	REVISION	SIGNATURE	DATE

D:\std dwg 2015\DS-705(REV00)

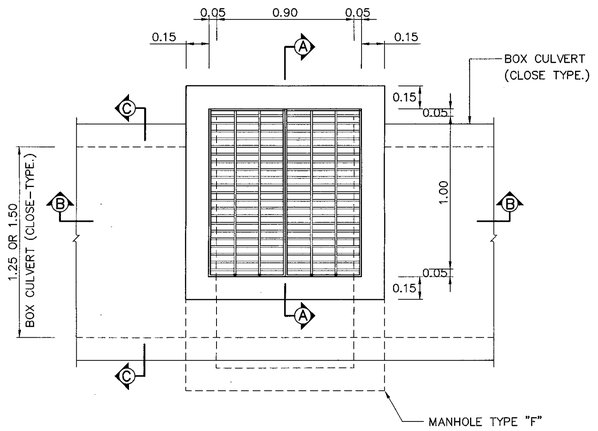

PLAN OF MANHOLE TYPE "F"

SCALE 1 : 20

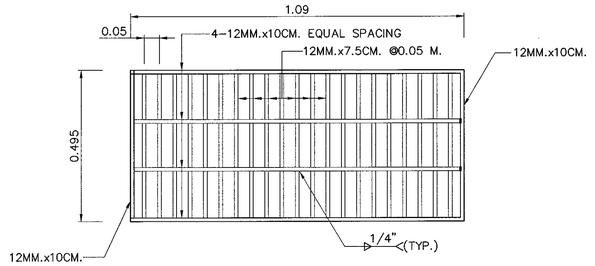

STEEL GRATING COVER DETAILS

SCALE 1 : 10

NOTES :

1. ALL DIMENSIONS ARE IN METERS UNLESS OTHERWISE INDICATED.
2. CONCRETE SHALL HAVE A MINIMUM ULTIMATE COMPRESSIVE STRENGTH OF 20 MPa.(204 KSC.) FOR 15x15x15 CM. CUBE AT 28 DAYS, CEMENT SHALL CONFORM TO TIS. 15 TYPE I PORTLAND CEMENTOR APPROVAL TYPE.
3. REINFORCING STEEL SHALL CONFROM TO TIS. 20 GRADE SR 24 FOR ROUND BAR AND TIS. 24 GRADE SD 40 FOR DEFORM BAR.
4. STRUCTURAL STEEL SHALL CONFROM TO TIS. 1227 GRADE SM 400
5. FLAT BAR STEEL SHALL CONFORM TO TIS. 1479 GRADE SS 400
6. STRUCTURAL STEEL SHALL BE PAINTED WITH RUST–OLEUM PAINT OR EQUIVALENT TWICE AND WITH OIL PAINT ONCE.
7. CLEAR CONCRETE COVER SHALL BE 3 CM. OR OTHERWISE INDICATED.
8. BOX CULVERT (CLOSE TYPE) SHALL BE USED FOR ACROSS THE CONNECTION ROAD AND UNDER ROADWAY.
9. IF CONSTRUCT MANHOLE AT SIDEWALK , MANHOLE COVER SHALL BE REINFORCED CONCRETE.
10. BOX CULVERT (CLOSED TYPE) SHALL BE CONFORM TO D.O.H. STANDARD, THAT MAY BE CAST–IN–SITU OR PRECAST AND SIZE NOT MORE THAN 1.50x1.50 M.
11. CAST IRON COVER SHALL BE USED AS APPROVAL BY THE ENGINEER, IT SHALL CONFORM TO TIS. 537 OR ASTM A395M–99
    - 11.1 A MINIMUM TEST LOAD OF 40 TONS.
    - 11.2 A TENSILE TEST NOT LESS THAN 415 Mpa.
    - 11.3 AN ENLONGATION TEST NOT LESS THAN 18%

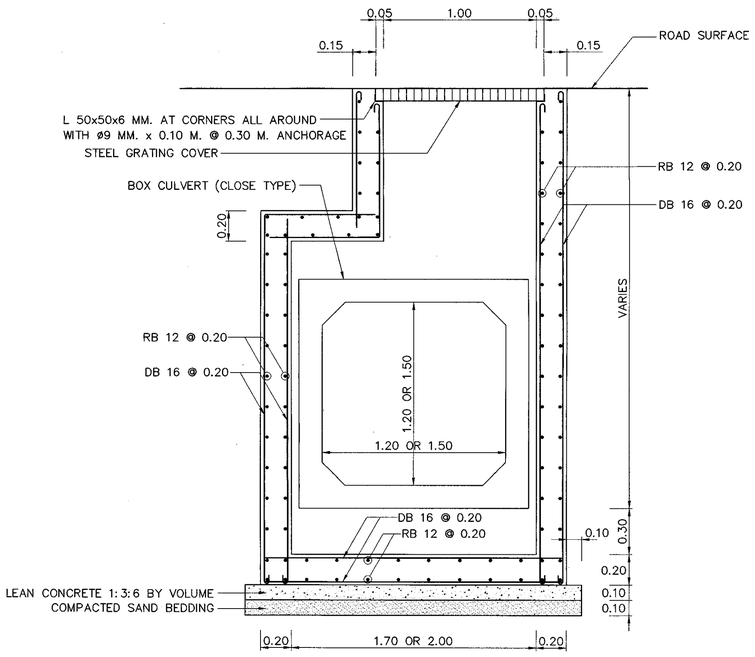

SECTION Ⓐ – Ⓐ

SCALE 1 : 20

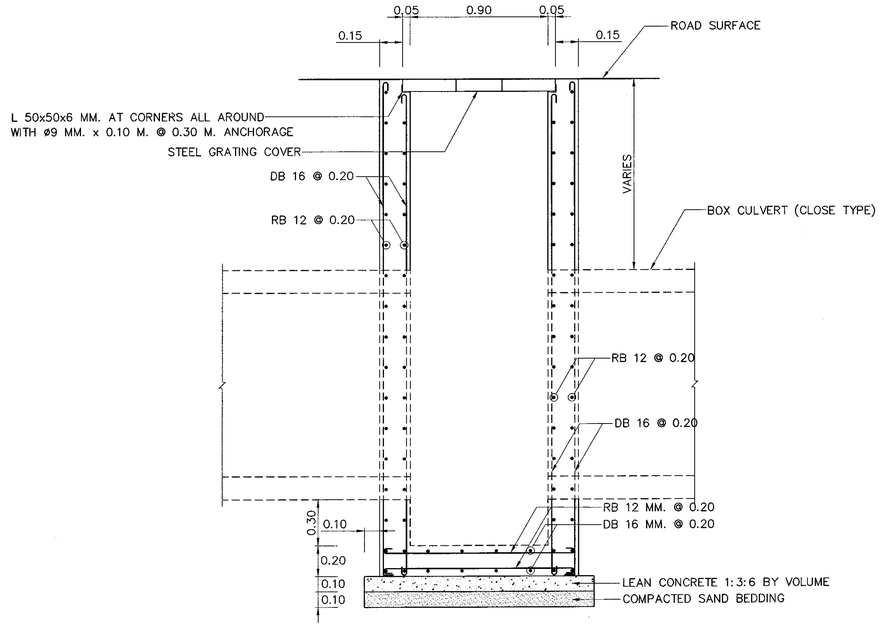

SECTION Ⓑ – Ⓑ

SCALE 1 : 20

REF.	REVISION	SIGNATURE	DATE

KINGDOM OF THAILAND

MINISTRY OF TRANSPORT

DEPARTMENT OF HIGHWAYS

STANDARD DRAWING

MANHOLE

TYPE F : FOR BOX CULVERT (CLOSE–TYPE)

DESIGNED : D.O.H. & CONSULTANTS	**CHECKED :** BUREAU OF LOCATION & DESIGN	**DATE :** OCT 2015
SUBMITTED : (DIRECTOR OF LOCATION & DESIGN BUREAU)		**SCALE :** AS SHOWN
APPROVED : (FOR DIRECTOR GENERAL)		**DWG NO.** DS–706
		SHEET NO. 115

D:\std dwg 2015\DS-706(REV00)

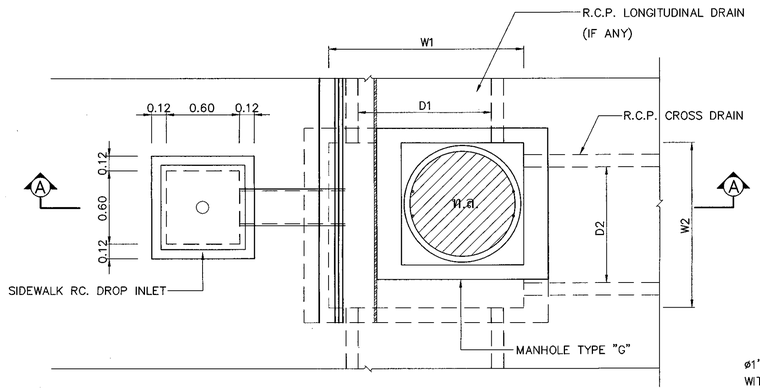

PLAN OF MANHOLE TYPE "G" WITH R.C. DROP INLET

SCALE 1 : 25

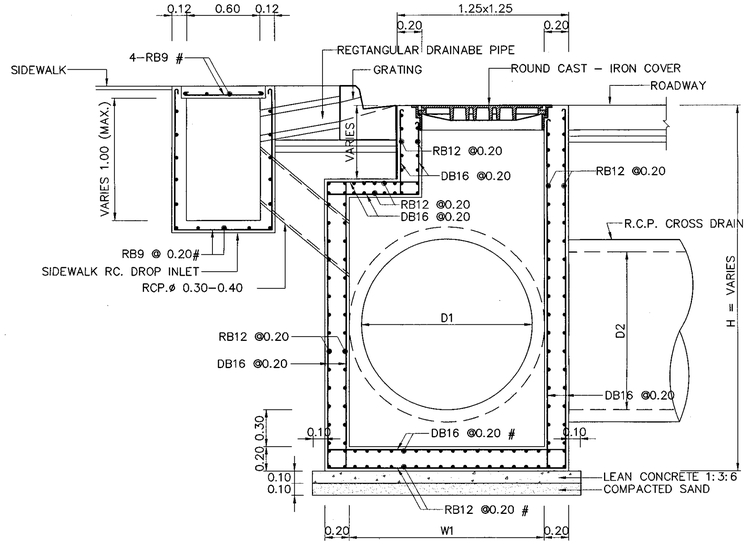

SECTION Ⓐ – Ⓐ OF RC. MANHOLE TYPE "G"

SCALE 1 : 25

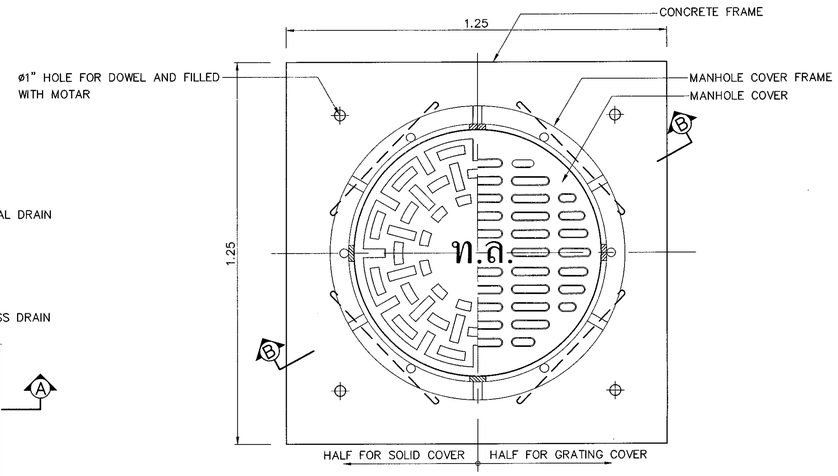

PLAN OF CAST IRON MANHOLE COVER & FRAME

SCALE 1 : 10

NOTES :

1. ALL DIMENSIONS ARE IN METERS UNLESS OTHERWISE INDICATED.
2. CONCRETE SHALL HAVE A MINIMUM ULTIMATE COMPRESSIVE STRENGTH OF 20 MPa.(204 KSC.) FOR 15x15x15 CM. CUBE AT 28 DAYS, CEMENT SHALL CONFORM TO TIS. 15 TYPE I PORTLAND CEMENTOR APPROVAL TYPE.
3. REINFORCEMENT STEEL SHALL CONFORM TO TIS. 20 GRADE SR 24 AND TIS 24 GRADE SD 40 FOR DEFORMED BAR.
4. CLEAR CONCRETE COVER SHALL BE 3 CM. OR OTHERWISE INDICATED.
5. LETTERS ON THE MANHOLE COVER IS 5 CM. HIGHT.
6. CAST–IRON COVER SHALL CONFORM TO TIS.537 OR ASTM A395M–99 AS DIRECTED BY THE ENGINEER.
   - 6.1 A MINIMUM TEST LOAD OF 40 TONS.
   - 6.2 A TENSILE TEST NOT LESS THAN 415 Mpa.
   - 6.3 AN ENLONGATION TEST NOT LESS THAN 18%
7. CAST–IRON COVER SHALL BE GRATING OR SOLID TYPE THAT DESIGNED BY THE ENGINEER.
8. THE OPENING PART OF GRATING CAST–IRON COVER SHALL HAVE THE PERCENTAGE OF VOID MORE THAN 25 % BY THE WHOLE AREA OF COVER OR APPROVED BY THE ENGINEEER.

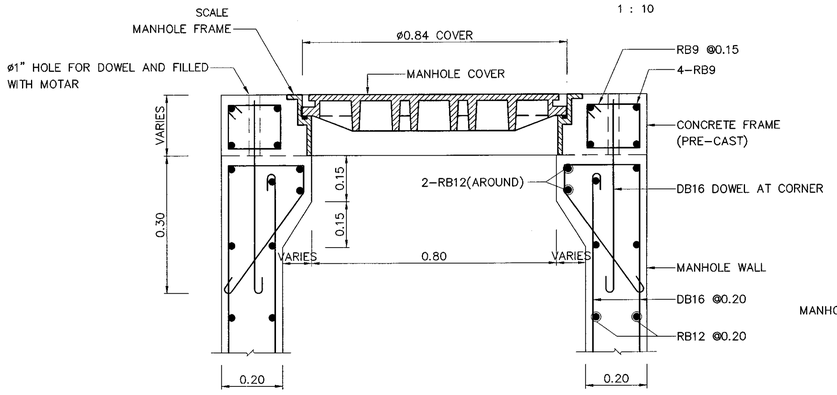

SECTION Ⓑ – Ⓑ FOR PRE–CAST CONCRETE FRAME

SCALE 1 : 10

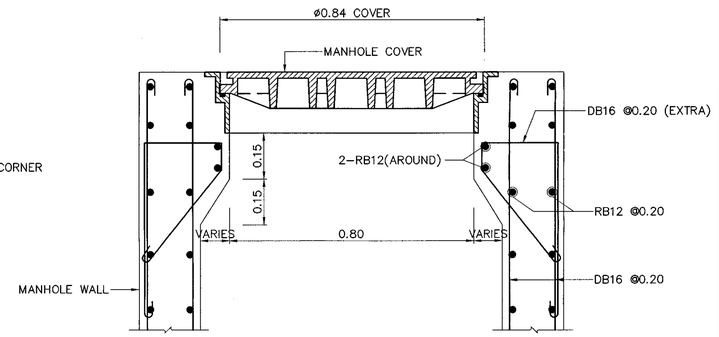

SECTION Ⓑ – Ⓑ FOR CAST–IN–SITU CONCRETE FRAME

SCALE 1 : 10

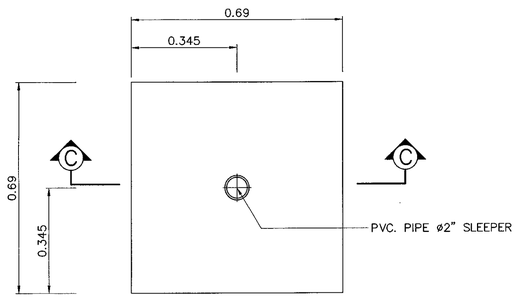

PLAN OF R.C. COVER FOR SIDEWALK DROP INLET

SCALE 1 : 10

TABLE 1 DIMENSION OF MANHOLE TYPE G

INSIDE MANHOLE WIDTH (M.)	D1 (ø)		D2 (ø)		
	1.00	1.20	–	1.00	1.20
W1	1.25	1.50			
W2			1.00	1.25	1.50



SECTION Ⓒ – Ⓒ

SCALE 1 : 10

KINGDOM OF THAILAND

MINISTRY OF TRANSPORT
DEPARTMENT OF HIGHWAYS

STANDARD DRAWING

MANHOLE
TYPE G

DESIGNED : D.O.H. & CONSULTANTS	CHECKED : BUREAU OF LOCATION & DESIGN		DATE : OCT 2015
SUBMITTED : (DIRECTOR OF LOCATION & DESIGN BUREAU)			SCALE : AS SHOWN
APPROVED : (FOR DIRECTOR GENERAL)			DWG NO. DS–707
			SHEET NO. 116

REF.	REVISION	SIGNATURE	DATE

D:\std dwg 2015\DS-707(REV00)

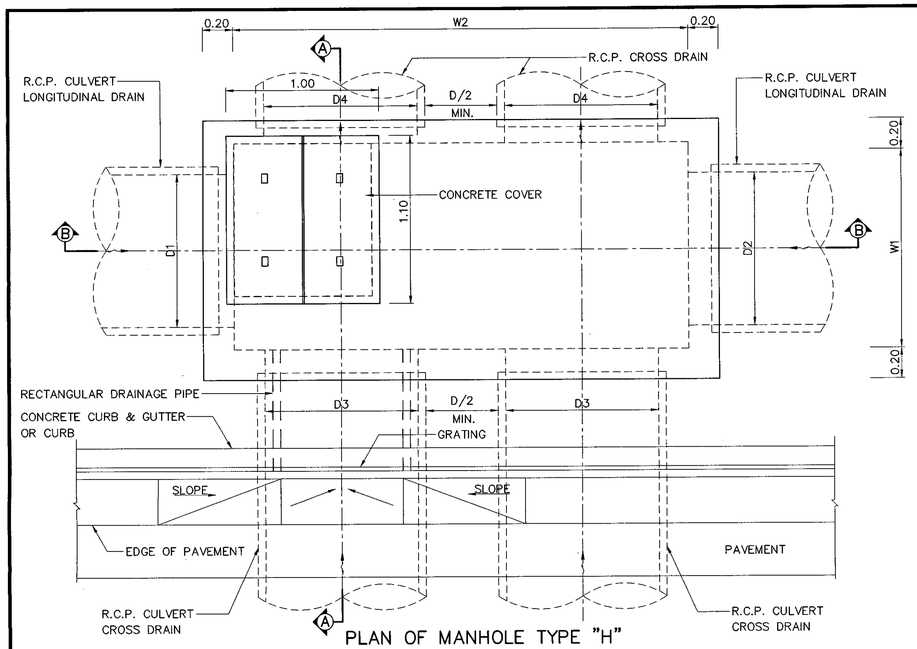

PLAN OF MANHOLE TYPE "H"

SCALE 1 : 20

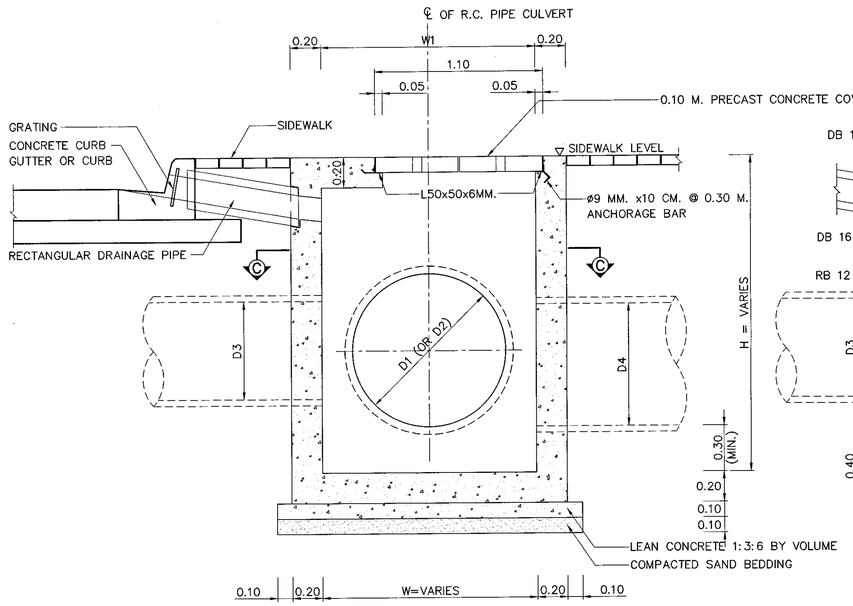

SECTION Ⓐ – Ⓐ

SCALE 1 : 20

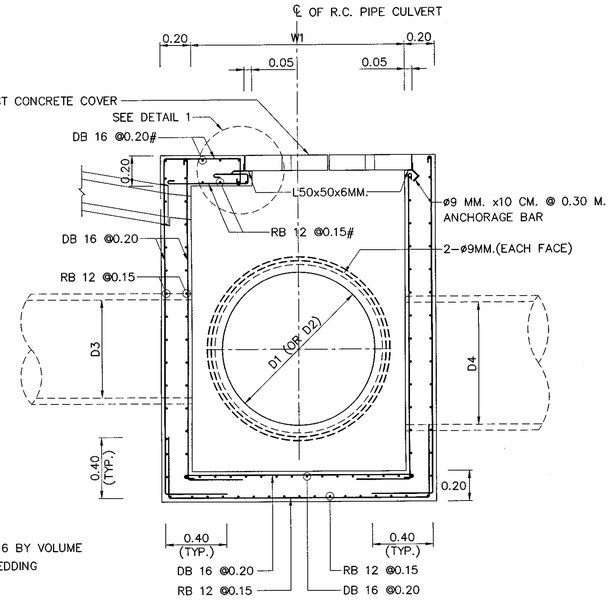

SECTION Ⓐ – Ⓐ

SCALE 1 : 20

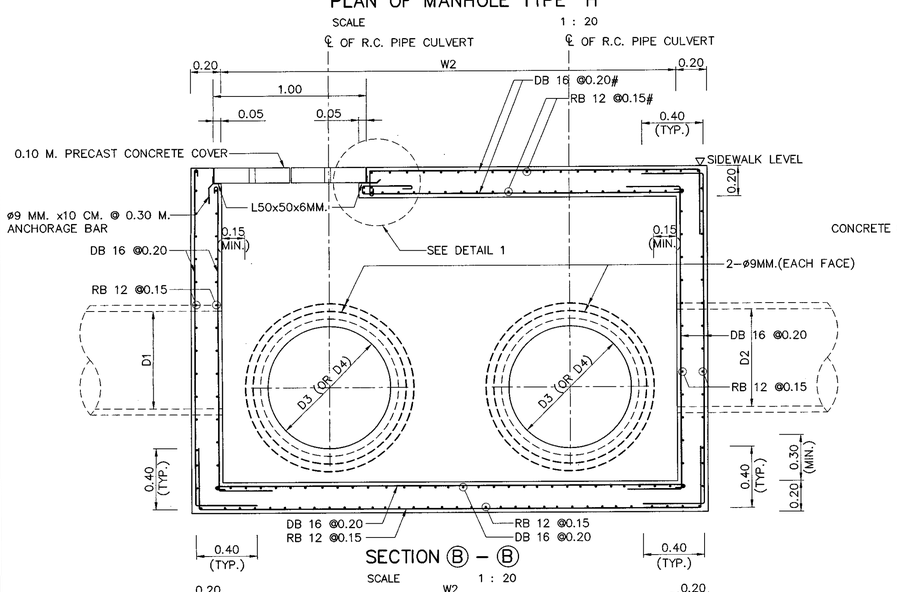

SECTION Ⓑ – Ⓑ

SCALE 1 : 20

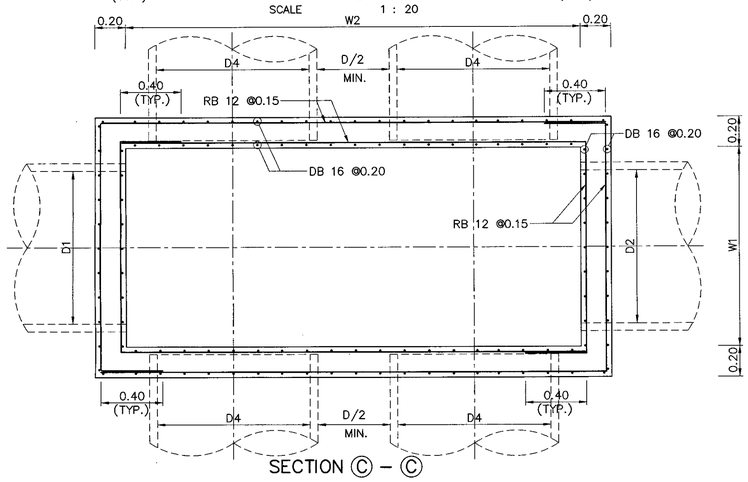

SECTION Ⓒ – Ⓒ

SCALE 1 : 20

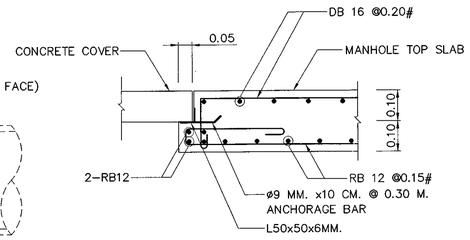

DETAIL "1"

SCALE 1 : 10

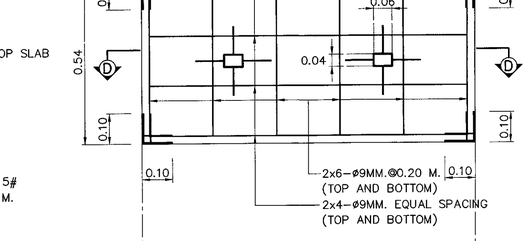

PLAN

SCALE 1 : 10

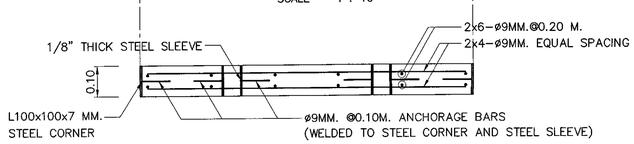

SECTION Ⓓ – Ⓓ

CONCRETE COVER DETAILS

SCALE 1 : 10

NOTES :

1. ALL DIMENSIONS ARE IN METERS UNLESS OTHERWISE INDICATED.
2. CONCRETE SHALL HAVE A MINIMUM ULTIMATE COMPRESSIVE STRENGTH OF 20 MPa.(204 KSC.) FOR 15x15x15 CM. CUBE AT 28 DAYS, CEMENT SHALL CONFORM TO TIS. 15 TYPE I PORTLAND CEMENTOR APPROVAL TYPE.
3. REINFORCEMENT STEEL SHALL CONFORM TO TIS. 20 GRADE SR 24 AND TIS. 24 GRADE DB40.
4. STRUCTURAL STEEL SHALL CONFORM TO TIS. 1227 GRADE SM 400.
5. STRUCTURAL STEEL SHALL BE PAINTED WITH RUST–OLEUM PAINT OR EQUIVALENT TWICE AND WITH OIL PAINT ONCE.
6. CLEAR CONCRETE COVER SHALL BE 3 CM. OR OTHERWISE INDICATED.

TABLE 1 DIMENSION OF MANHOLE TYPE H

INSIDE MANHOLE WIDTH (M.)	D1 OR D2		D3 OR D4	
	1–ø1.00	1–ø1.20	2–ø1.00	2–ø1.20
W1	1.25	1.50		
W2			3.00	3.60

KINGDOM OF THAILAND

MINISTRY OF TRANSPORT
DEPARTMENT OF HIGHWAYS

STANDARD DRAWING

MANHOLE
TYPE H

DESIGNED : D.O.H. & CONSULTANTS	CHECKED : BUREAU OF LOCATION & DESIGN	DATE : OCT 2015
SUBMITTED : (DIRECTOR OF LOCATION & DESIGN BUREAU)		SCALE : AS SHOWN
APPROVED : (FOR DIRECTOR GENERAL)		DWG NO. DS–708
		SHEET NO. 117

REF.	REVISION	SIGNATURE	DATE

D:\std dwg 2015\DS-708(REV00)

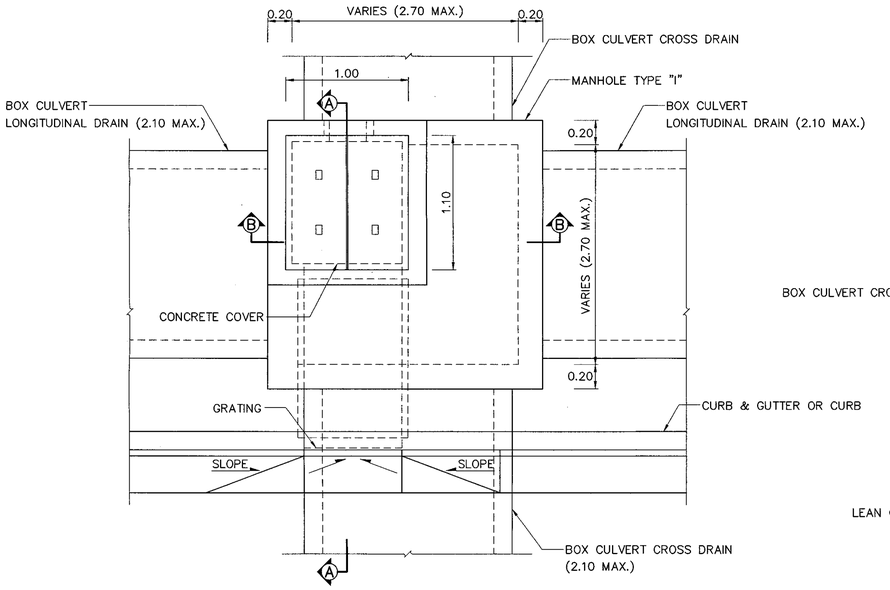

PLAN OF MANHOLE TYPE "I"
SCALE 1 : 25

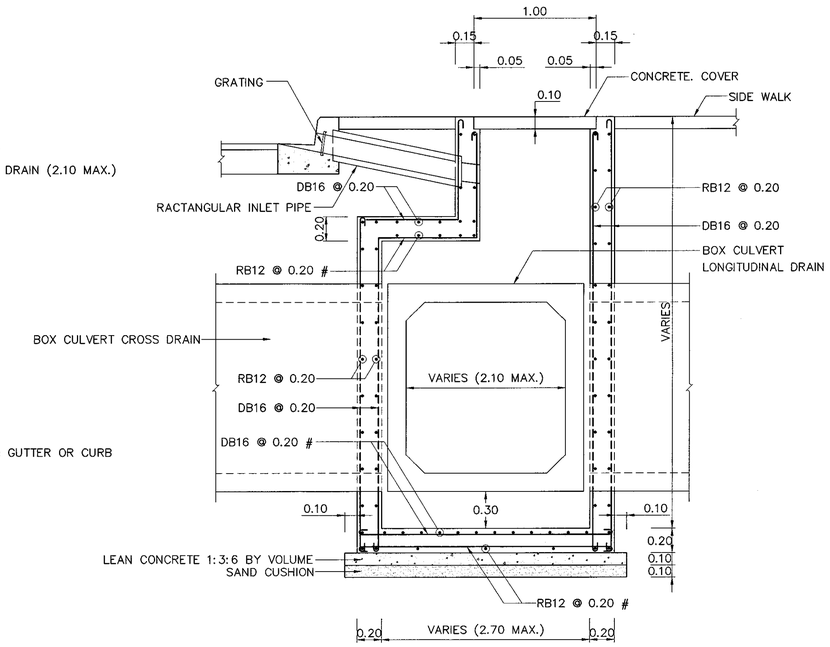

SECTION Ⓐ – Ⓐ
SCALE 1 : 25

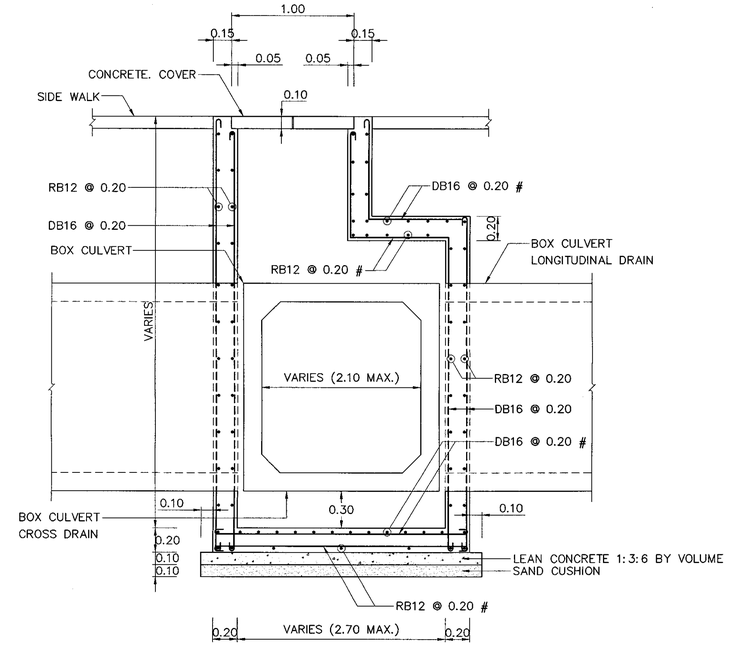

SECTION Ⓑ – Ⓑ
SCALE 1 : 25

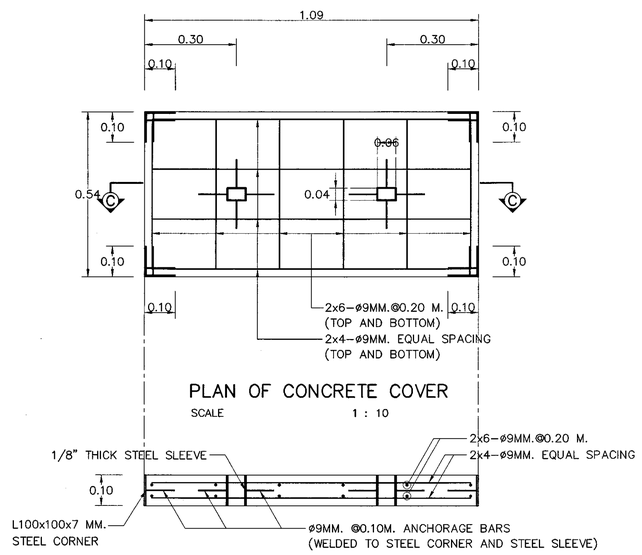

PLAN OF CONCRETE COVER
SCALE 1 : 10

SECTION Ⓒ – Ⓒ

CONCRETE COVER DETAILS
SCALE 1 : 10

NOTES :

1. ALL DIMENSIONS ARE IN METERS UNLESS OTHERWISE INDICATED.
2. CONCRETE SHALL HAVE A MINIMUM ULTIMATE COMPRESSIVE STRENGTH OF 20 MPa.(204 KSC.) FOR 15x15x15 CM. CUBE AT 28 DAYS, CEMENT SHALL CONFORM TO TIS. 15 TYPE I PORTLAND CEMENTOR APPROVAL TYPE.
3. REINFORCING STEEL SHALL CONFROM TO TIS. 20 GRADE SR 24 AND TIS. 24 GRADE SD 40.
4. STRUCTURAL STEEL SHALL CONFROM TO TIS. 1227 GRADE SM 400.
5. STRUCTURAL STEEL SHALL BE PAINTED WITH RUST–OLEUM PAINT OR EQUIVALENT TWICE AND WITH OIL PAINT ONCE.
6. CLEAR CONCRETE COVER SHALL BE 3 CM. OR OTHERWISE INDICATED.
7. WIDTH OF MANHOLE TYPE I ARE VARIES CONFORM TO THE SIZE OF LONGITUDINAL OR CROSS DRAIN BOX CULVERT AND NOT MORE THAN 2.70 M. WIDTH.
8. THE SIZE OF BOX CULVERT FOR LONGITUDINAL AND CROSS DRAIN SHALL BE NOT MORE THAN 2.10 WIDTH.

REF.	REVISION	SIGNATURE	DATE

KINGDOM OF THAILAND

MINISTRY OF TRANSPORT
DEPARTMENT OF HIGHWAYS

STANDARD DRAWING

MANHOLE
TYPE I

DESIGNED : D.O.H. & CONSULTANTS	CHECKED : BUREAU OF LOCATION & DESIGN	DATE : OCT 2015
SUBMITTED : (DIRECTOR OF LOCATION & DESIGN BUREAU)		SCALE : AS SHOWN
APPROVED : (FOR DIRECTOR GENERAL)		DWG NO. DS–709
		SHEET NO. 118

D:\std dwg 2015\DS-709(REV00)

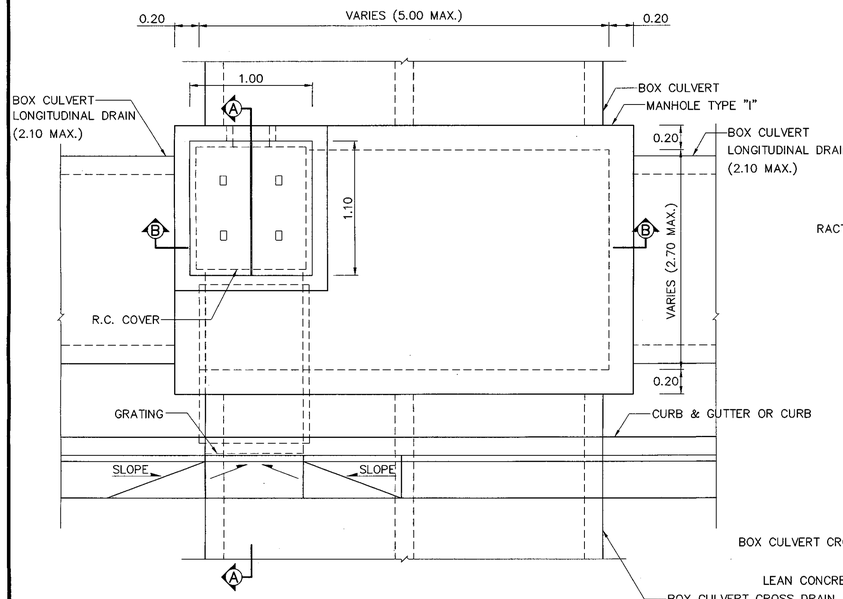

PLAN OF MANHOLE TYPE "J"

SCALE 1 : 25

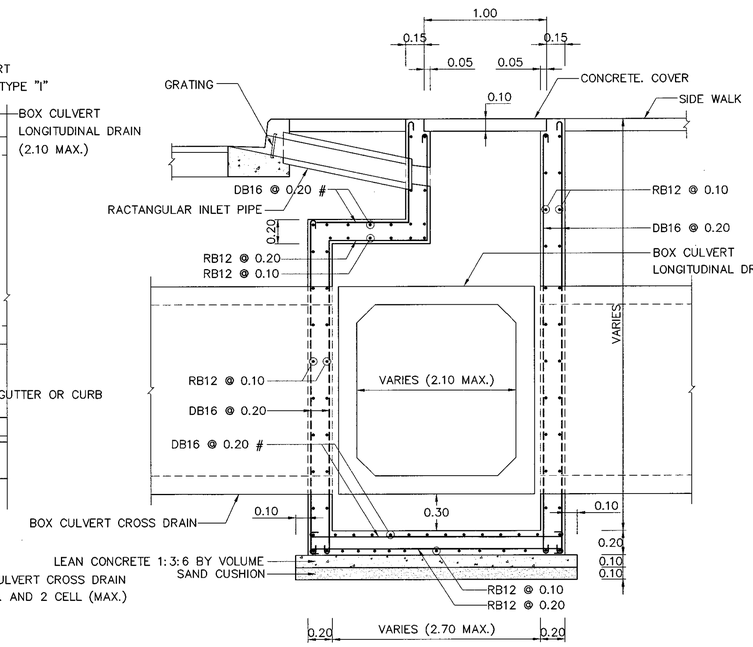

SECTION Ⓐ – Ⓐ

SCALE 1 : 25

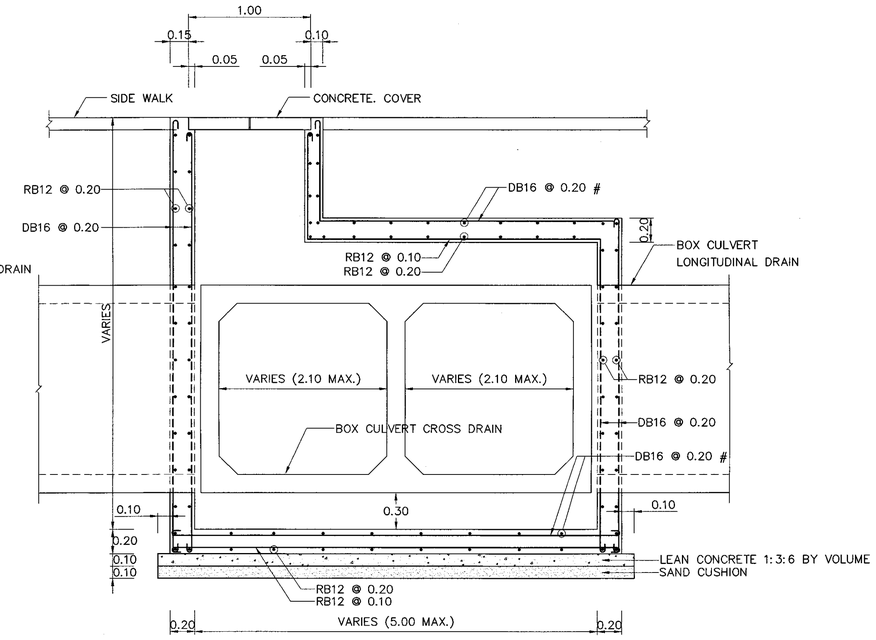

SECTION Ⓑ – Ⓑ

SCALE 1 : 25

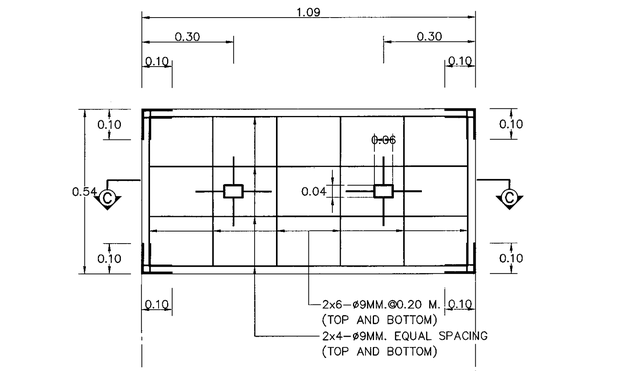

PLAN OF CONCRETE COVER

SCALE 1 : 10

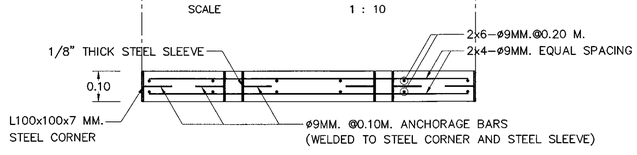

SECTION Ⓒ – Ⓒ

CONCRETE COVER DETAILS

SCALE 1 : 10

NOTES :

1. ALL DIMENSIONS ARE IN METERS UNLESS OTHERWISE INDICATED.
2. CONCRETE SHALL HAVE A MINIMUM ULTIMATE COMPRESSIVE STRENGTH OF 20 MPa.(204 KSC.) FOR 15x15x15 CM. CUBE AT 28 DAYS, CEMENT SHALL CONFORM TO TIS. 15 TYPE I PORTLAND CEMENTOR APPROVAL TYPE.
3. REINFORCING STEEL SHALL CONFROM TO TIS. 20 GRADE SR 24 AND TIS. 24 GRADE SD 40.
4. STRUCTURAL STEEL SHALL CONFROM TO TIS. 1227 GRADE SM 400.
5. STRUCTURAL STEEL SHALL BE PAINTED WITH RUST–OLEUM PAINT OR EQUIVALENT TWICE AND WITH OIL PAINT ONCE.
6. CLEAR CONCRETE COVER SHALL BE 3 CM. OR OTHERWISE INDICATED.
7. WIDTH OF MANHOLE TYPE J ARE VARIES CONFORM TO THE NUMBER OF ROW AND SIZE OF LONGITUDINAL OR CROSS DRAIN BOX CULVERT AND NOT MORE THAN 2.70 M. AND 5.00 M. WIDTH.
8. MAXIMUM SIZE OF LONGITUDINAL BOX CULVERT IS 1–2.10 M. WIDTH AND CROSS DRAIN BOX CULVERT IS 2–2.10 M. WIDTH.

REF.	REVISION	SIGNATURE	DATE

KINGDOM OF THAILAND

MINISTRY OF TRANSPORT

DEPARTMENT OF HIGHWAYS

STANDARD DRAWING

MANHOLE

TYPE J

DESIGNED : D.O.H. & CONSULTANTS	**CHECKED :** BUREAU OF LOCATION & DESIGN	**DATE :** OCT 2015
SUBMITTED : (DIRECTOR OF LOCATION & DESIGN BUREAU)		**SCALE :** AS SHOWN
APPROVED : (FOR DIRECTOR GENERAL)		**DWG NO.** DS–710
		SHEET NO. 119

D:\std dwg 2015\DS-710(REV00)

SECTION 5) STABILITY AND EROSION PROTECTION

SODDING DETAILS

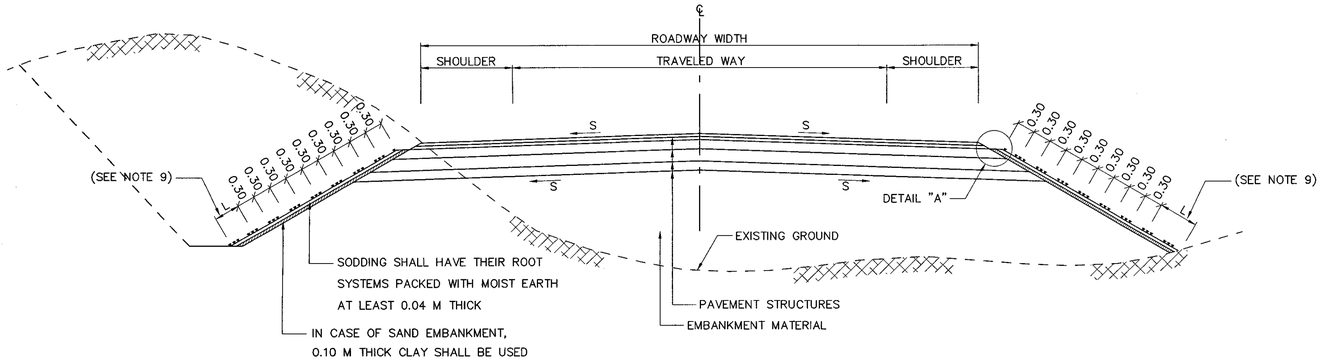

BLOCK SODDING
NOT TO SCALE

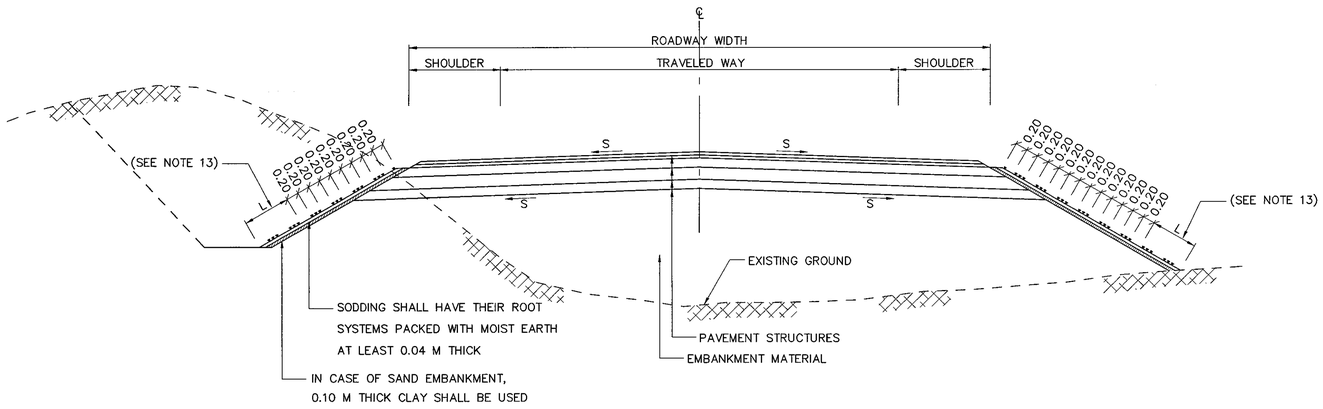

STRIP SODDING
NOT TO SCALE

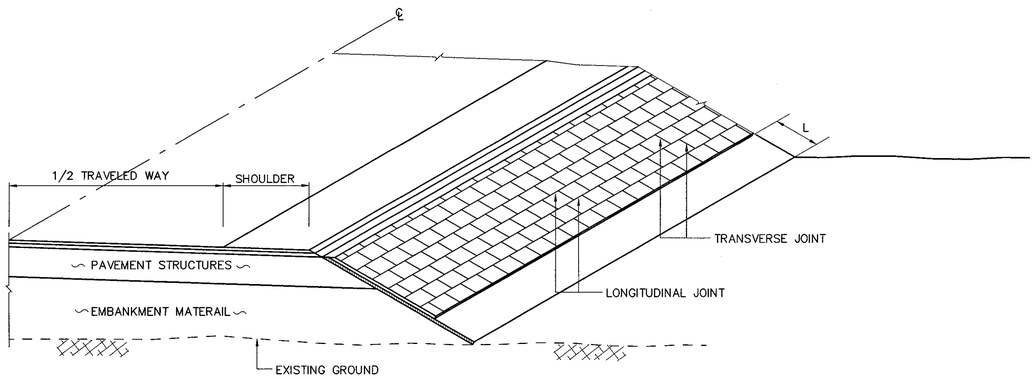

ISOMETRIC DIAGRAM OF BLOCK SODDING
NOT TO SCALE

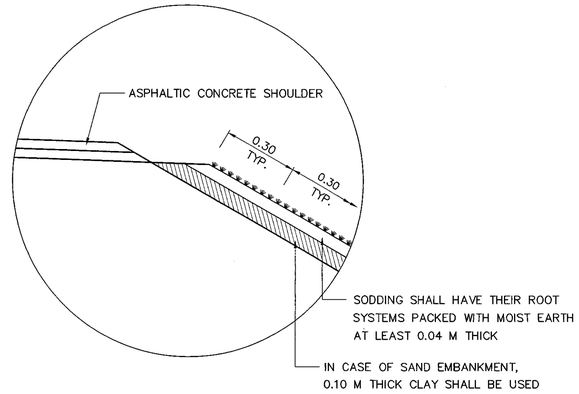

DETAIL "A"
NOT TO SCALE

NOTES :

GENERAL

1. ALL DIMENSIONS ARE IN METERS UNLESS OTHERWISE INDICATED.
2. THE ENGINEER SHALL DECIDE WHETHER OR NOT TO PROVIDE SODDING FOR SLOPE PROTECTION. GENERALLY EMBANKMENTS COMPOSED OF SANDY OR SILTY MATERIALS WILL REQUIRE SODDING. CUT SLOPE WILL NOT NORMALLY BE SODDED AND THEN ONLY AT THE DIRECTION OF THE ENGINEER.
3. WHERE THE SIDE SLOPE MATERIAL IS NOT SUITABLE FOR GROWING GRASS,ORGANIC TOP SOIL APPROXIMATELY 0.10 M THICK SHALL BE PLACED ON THE SIDE SLOPES AND LIGHTLY COMPACTED TO THE SATISFACTION OF THE ENGINEER, THOROUGHLY MOISTENED WITH WATER AND SODDING PLACED.
4. WHERE THE SIDE SLOPE MATERIAL IS SUITABLE FOR GRASS, THE FOLLOWING PROCEDURES SHALL APPLY AFTER THE ROADWAY FORMATION IS CONSTRUCTED TO THE ELEVATION AS SHOWN ON THE DRAWING AND THE SIDE SLOPE HAS BEEN SHAPED AS REQUIRED. THE SIDE SLOPE MATERIAL SHALL BE SCARIFIED TO A MINIMUM DEPTH OF 0.05 M. THOROUGHLY MOISTENED WITH WATER AND SODDING PLACED.
5. THE TYPE OF GRASS USED SHALL BE A LOCAL SPECIES WHICH GROWS RAPIDLY. THE ENGINEER SHALL DECIDE IN THE FIELD WHETHER TOP SOIL IS REQUIRED AND WHICH TYPE OF GRASS SHALL BE USED. THE WORK SHALL BE COMPLETED TO THE DETAILS AS SPECIFIED ON THE DRAWING.
6. THE CONTRACTOR SHALL BE RESPONSIBLE FOR MAINTAINING THE GRASS UNTIL THE END OF THE MAINTENANCE PERIOD.

BLOCK SODDING

7. BLOCK SODDING OBTAINED FROM PLANTED GROUND FOR PLACING SHALL HAVE THEIR ROOT SYSTEM PACKED WITH MOIST EARTH AT LEAST 0.04 M THICK AND HAVE A MINIMUM SIZE OF APPROXIMATELY 0.30 x 0.30 M. THE SODDING SHALL BE PLACED ON THE SIDE SLOPES WITHIN 48 HOURS AFTER REMOVAL FROM BORROW AREA.
8. SODDING SHALL BE LAID IN STAGGERED ROWS PARALLEL TO ROADWAY ALIGNMENT AS SHOWN ON THE DRAWING. EACH BLOCK SHALL BE STAGGERED ONE HALF ITS LENGTH AND BE FIRMLY BUTTED AGAINST THE PREVIOUS BLOCK(S).
9. THE LENGTH " L" SHALL BE DIRECTED BY THE ENGINEER WHICH ABOVE EXISTING GROUND APPROXIMATELY 0.30 M OR NO EROSIVE POSITION.
10. PLANTED BLOCK SHALL BE PLACED AND LIGHTLY COMPACTED ON THE DESIGNATED AREAS AND THE LONGITUDINAL INTERSTICES SEALED WITH TOP SOIL. THE PLANTED SODS SHALL BE WATERED DAILY UNTIL THEY HAVE ROOTED AND HAVE ESTABLISHED THEMSELVES IN THE NEW AREAS.

STRIP SODDING

11. STRIP SODDING SHALL ALSO HAVE THEIR ROOT SYSTEMS PACKED WITH MOIST EARTH AT LEAST 0.04 M THICK AND HAVE A MINIMUM WIDTH OF 0.20 M. STRIP SODDING SHALL ALSO BE PLACED WITHIN 48 HOURS AFTER REMOVAL FROM BORROW AREAS.
12. SODDING SHALL BE PLACED IN CONTINUOUS ROW PARALLEL TO ROADWAY ALIGNMENT AS SHOWN ON THE DRAWINGS. EACH ROW SHALL BE AT LEAST 0.20 M WIDE AND GAPS BETWEEN ROWS SHALL NOT EXCEED 0.20 M.
13. THE LENGTH "L" SHALL BE DIRECTED BY THE ENGINEER WHICH ABOVE EXISTING GROUND APPROXIMATELY 0.30 M OR NO EROSIVE POSITION.
14. PLANTED STRIPS SHALL BE PLACED AND LIGHTLY COMPACTED ON THE DESIGNATED AREA AND THE TRANSVERSE INTERSTICES SEALED WITH TOP SOIL. STRIP SODDING SHALL BE MAINTAINED AS DESCRIBED IN NOTE NO. 3 AND NO.6 ABOVE.

KINGDOM OF THAILAND

MINISTRY OF TRANSPORT
DEPARTMENT OF HIGHWAYS

STANDARD DRAWING

SLOPE PROTECTION FOR FILL SLOPE
SODDING DETAIL

DESIGNED : D.O.H. & CONSULTANTS	**CHECKED :** BUREAU OF LOCATION & DESIGN		**DATE :** OCT 2015
	SUBMITTED : (DIRECTOR OF LOCATION & DESIGN BUREAU)		**SCALE :** AS SHOWN
			DWG NO. SP-101
	APPROVED : (FOR DIRECTOR GENERAL)		**SHEET NO.** 120

REF.	REVISION	SIGNATURE	DATE

D:\std dwg 2015\SP-101(REV00)

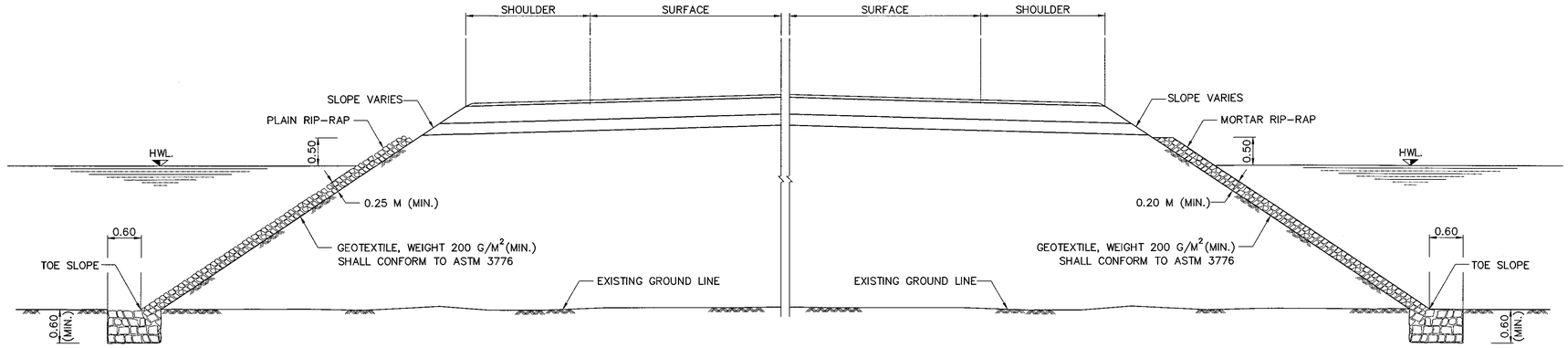

PLAIN AND MORTAR RIP–RAP PROTECTION

NOT TO SCALE

PLAIN RIP–RAP CONSTRUCTION

1. EMBANKMENT SLOPES SHALL BE COMPACTED AND SHAPED TO TYPICAL CROSS–SECTION SPECIFIED.
2. STONE USED FOR PLAIN RIP–RAP SHALL WEIGH BETWEEN 25–70 KG. EACH AND AT LEAST 75 PERCENT SHALL WEIGH MORE THAN 45 KG. WITH SUITABLE KEY STONE SIZE.
3. THE LARGEST STONE SHALL BE PLACED FIRST. THE INTERSTICES SHALL BE FILLED WITH SMALL STONES. THE THICKNESS OF PLAIN RIP–RAP SHALL NOT BE LESS THAN 0.25 M.
4. THE PLACING OF STONES SHALL BE AT LEAST 0.60 M THICK UNDER EXISTING GROUND LEVEL.
5. STONE SHALL BE CONSIDERED TO FILL AT TOE SLOPE AS SUITABLY IN CASE OF EXISTING GROUND ARE SOFT.

MORTAR RIP–RAP CONSTRUCTION

1. EMBANKMENT SLOPES SHALL BE COMPACTED AND SHAPED TO TYPICAL CROSS–SECTION SPECIFIED.
2. STONE USED FOR MORTAR RIP–RAP SHALL WEIGH BETWEEN 15–40 KG. EACH AND AT LEAST 50 PERCENT SHALL WEIGH MORE THAN 30 KG. WITH SUITABLE KEY STONE SIZE.
3. THE LARGEST STONE SHALL BE PLACED FIRST. THE INTERSTICES SHALL BE FILLED WITH SMALL STONES. THE THICKNESS OF MORTAR RIP–RAP SHALL NOT BE LESS THAN 0.20 M.
4. THE VOIDS BETWEEN STONE SHALL BE FILLED WITH MORTAR CEMENT : SAND RATIO 1:1 BY VOLUME.
5. THE PLACING OF STONES SHALL BE AT LEAST 0.60 M THICK UNDER EXISTING GROUND LEVEL.
6. STONE SHALL BE CONSIDERED TO FILL AT TOE SLOPE AS SUITABLY IN CASE OF EXISTING GROUND ARE SOFT.

NOTE:

1. ALL DIMENSIONS ARE IN METERS UNLESS OTHERWISE INDICATED.
2. THIS METHOD OF SLOPE PROTECTION IS SUITABLE ONLY IN SPECIFIC LOCATIONS AND CERTAIN CONDITIONS. IT SHOULD BE APPLIED WITH THE FIRM INFORMATIONS CONCERNED AND RECOMMENDED BY THE ENGINEER.
3. CONTRACTOR SHALL PERFORM STABILITY ANALYSIS TO ENSURE THAT THE SLOPE IS STABLE BEFORE COMMENCEMENT OF CONSTRUCTION.

REF.	REVISION	SIGNATURE	DATE

KINGDOM OF THAILAND

MINISTRY OF TRANSPORT

DEPARTMENT OF HIGHWAYS

STANDARD DRAWING

SLOPE PROTECTION FOR FILL SLOPE
RIP RAP

DESIGNED : D.O.H. & CONSULTANTS	**CHECKED :** BUREAU OF LOCATION & DESIGN	**DATE :** OCT 2015
SUBMITTED : (DIRECTOR OF LOCATION & DESIGN BUREAU)		**SCALE :** AS SHOWN
APPROVED : (FOR DIRECTOR GENERAL)		**DWG NO.** SP–102
		SHEET NO. 121

D:\std dwg 2015\SP-102(REV00)

SACKED–CONCRETE SLOPE PROTECTION

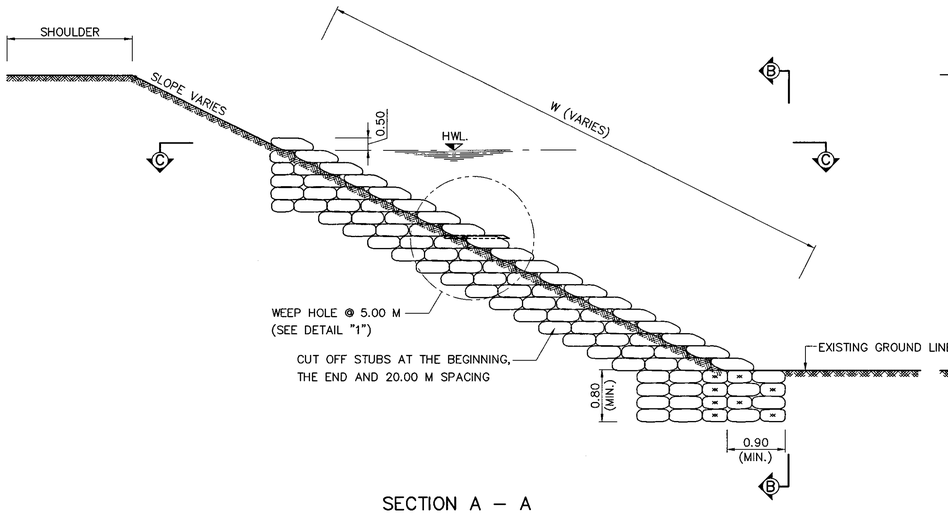

SECTION A – A
SCALE 1:50

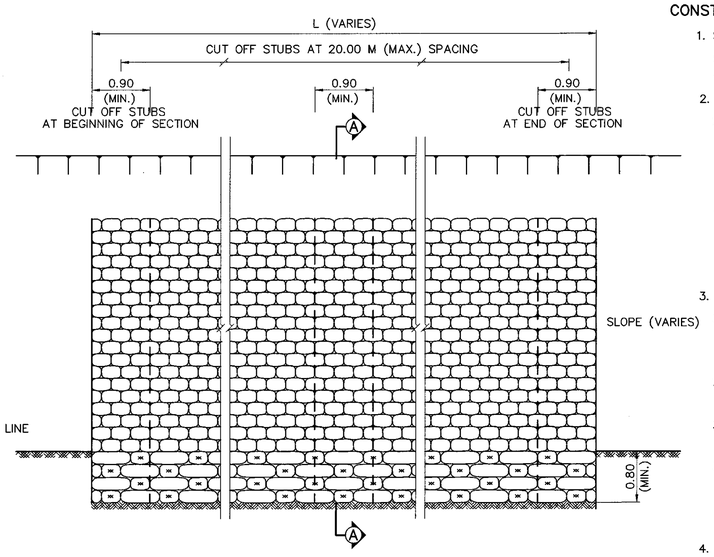

SECTION B – B
SCALE 1:50

CONSTRUCTION DETAILS

1. SACKED CONCRETE SLOPE PROTECTION IS THE SLOPE PROTECTION BY USING SACK FILL WITH CEMENT AND SOIL AGGREGATE. THE SACKED CONCRETE WILL BE PLACED ON THE SLOPE AS SHOWN IN THIS DRAWING.
2. MATERIALS
   - 2.1 THE SACKS WILL BE MADE OF TOUGH AND DURABLE SYNTHETIC MATERIAL (I.E. FERTILIZER BAG). THE SIZE SHALL BE LARGE ENOUGH TO CONTAIN CONCRETE NOT LESS THAN 30 LITRES AND THICKNESS NOT LESS THAN 20 CM WHEN PLACING. THE LENGTH OF SACK SHALL BE LONG ENOUGH TO BE FOLDED FOR CLOSING THE SACK.
   - 2.2 MATERAIL FILLED IN THE SACKS SHALL CONSIST OF CEMENT AND LOCAL AVAILABLE SOIL AGGREGATE OF THE PROPORTION 1:10 BY VOLUME. THE MAXIMUM SIZE OF SOIL AGGREGATE SHALL BE NOT LAGER THAN 8 CM AND FINE CONTAIN (PASSING SEIVE NO.200) SHALL BE LESS THAN 25%.
3. CONSTRUCTION METHOD
   - 3.1 MATERIAL PACKING SHALL CONFORM TO CONSTRUCTION DETAIL NO. 2.2. CEMENT AND SOIL AGGREGATE SHALL BE MIXED IN DRY CONDITION. AFTER FILLING, THE SACK SHALL BE FOLDED AND SEWED AT THE TOP WITH THE SAME MATERIAL AS THE SACK.
   - 3.2 THE EMBANKMENT SLOPE SHALL BE COMPACTED SLOPE AS SHOW IN THIS DRAWING WHICH CAN BE ADJUSTED BY THE ENGINEER.
   - 3.3 THE SACKED CONCRETE SHALL BE PLACED HORIZONTALLY FROM BOTTOM TO TOP USING STAGGERED PATTERN SHOWN IN THIS DRAWING. THE TOP SACKS ARE INSIDE.
   - 3.4 AFTER PLACING THE SACKS SHALL BE SPRAYED WITH WATER IF THE TIME USED FOR SOIL AGGREGATE AND CONCRETE MIXING TO WATER SPRAYING IS LONGER THAN 2 HOURS OR INTERLOCKING OF SACKS IS NOT GOOD ENOUGH, CEMENT SHALL BE SPREDED AT JOINTS OF SACKS BEFORE SPRAYING WATER.
4. PAYMENT SHALL BE CALCULATED BASED ON ACTUAL WORK QUANTITY IN M^2 INCLUDIMG COST OF CUT OFF STUBS.

REMARK :

1. ALL DIMENSIONS ARE IN METERS UNLESS OTHERWISE SPECIFIED.
2. CUT OFF STUBS SHALL BE CONSTRUTED AT THE BEGINNING AND THE END OF SECTION. WHEN THE CONSTRUCTION AREA IS LONGER THAN 20 M., THE SPACING OF CUT OFF STUBS SHALL BE LESSTHAN 20 M. THE ADDITIONAL CONSTRUCTION COST OF CUT OFF STUBS SHALL BE UNIT COST PER SQUARE METERS.
3. THIS SLOPE PROTECTION METHOD IS SUITABLE ONLY IN SPECIFIC LOCATIONS AND CERTAIN CONDITION, IT SHOULD BE APPLIED WITH THE FIRM INFORMATIONS AND RECCOMMENDED BY THE ENGINEER AND THE GEOLOGIST.
4. PAYMENT SHALL BE CALCULATED BASED ON ACTUAL WORK QUANTITY IN M^2 INCLUDING COST OF CUT OFF STUBS.

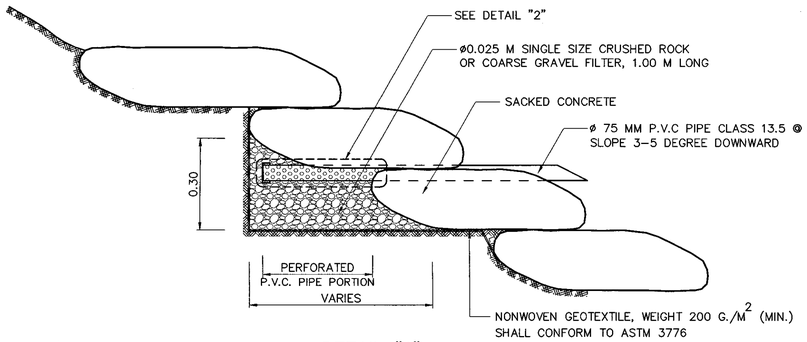

DETAIL "1"
WEEP HOLE
SCALE 1:10

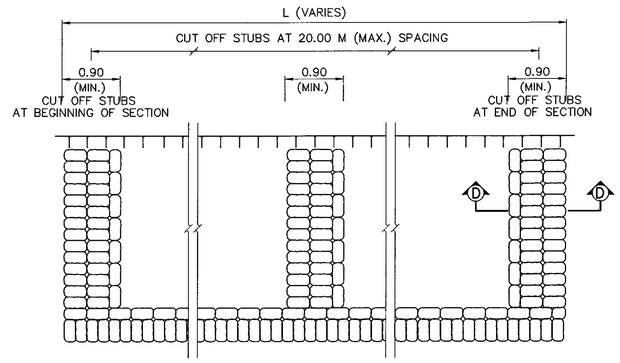

SECTION C – C CUT OFF STUBS PLACING
SCALE 1:50

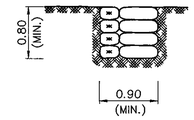

SECTION D – D
SCALE 1:50

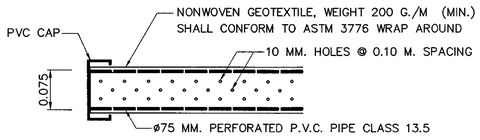

DETAIL "2"
PERFORATED P.V.C. PIPE
NOT TO SCALE

REF.	REVISION	SIGNATURE	DATE

KINGDOM OF THAILAND
MINISTRY OF TRANSPORT
DEPARTMENT OF HIGHWAYS

STANDARD DRAWING

SLOPE PROTECTION FOR FILL SLOPE
SACKED CONCRETE

DESIGNED : D.O.H. & CONSULTANTS	CHECKED : BUREAU OF LOCATION & DESIGN	DATE : OCT 2015
SUBMITTED : (DIRECTOR OF LOCATION & DESIGN BUREAU)		SCALE : AS SHOWN
APPROVED : (FOR DIRECTOR GENERAL)		DWG NO. SP–103
		SHEET NO. 122

D:\std dwg 2015\SP-103(REV00)

ROCK–AND–WIRE MATTRESS

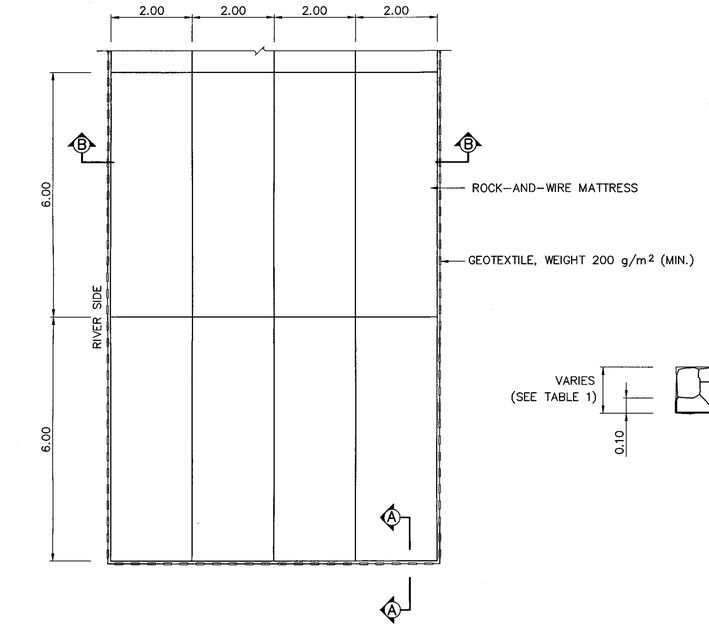

ROCK–AND–WIRE MATTRESS PLAN
SCALE 1 : 75

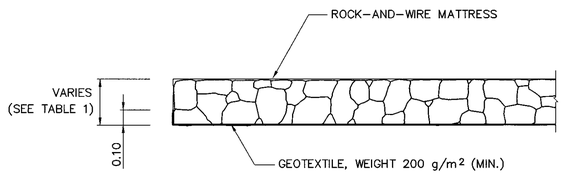

SECTION A–A
SCALE 1 : 20

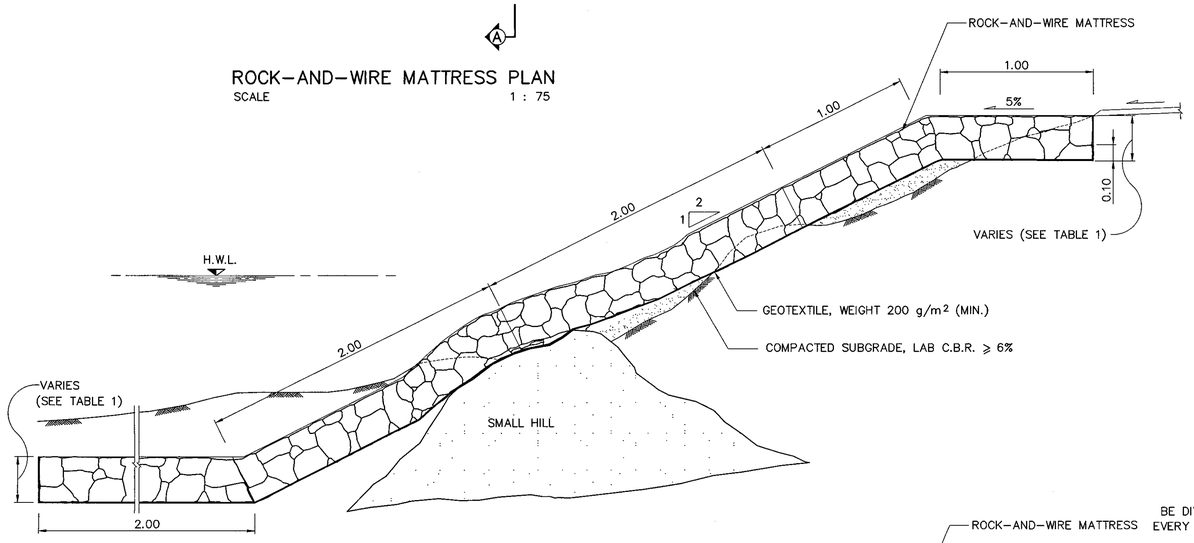

SECTION B–B (TYPE I)
SCALE 1 : 20

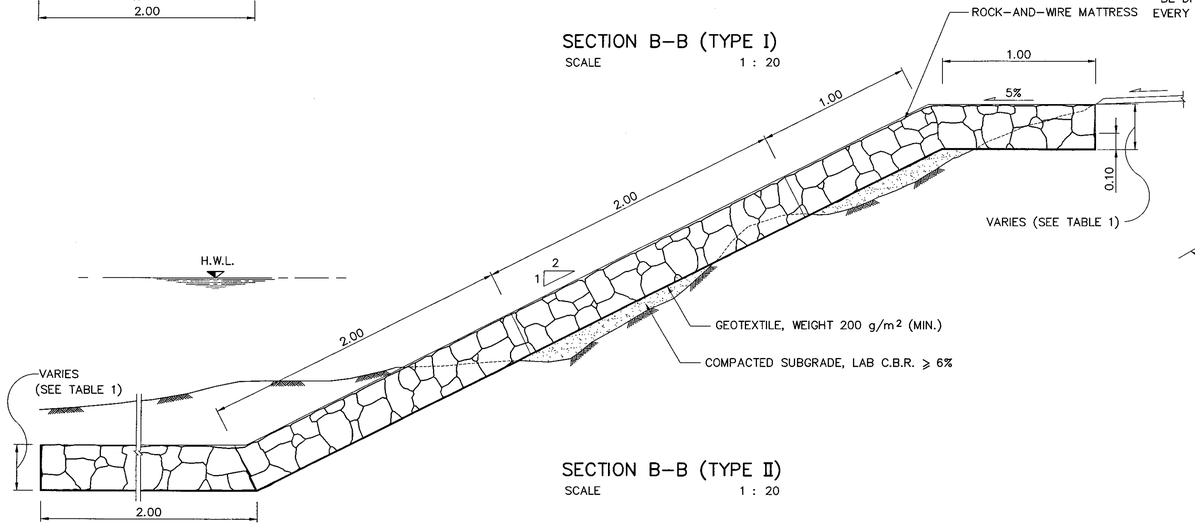

SECTION B–B (TYPE II)
SCALE 1 : 20

ROCK–AND–WIRE MATTRESS SPECIFICATION

1. GENERAL

THE MATTRESS BOX EITHER COATED TYPE WITH ZINC, AL–ZINC, AND ZINC–PVC SHALL HAVE TYPICAL DIMENSION AS SPECIFIED IN THIS DRAWING. THE MATTRESS SHALL CONSIST OF BOTTOM PANEL, SIDE PANEL, DIAPHRAGM PANEL, AND TOP COVER PANEL. IT SHALL BE DIVIDED BY DIAPHRAGM PANEL EVERY 1.0 M ALONG THE LONG SIDE OF THE MATTRESS BOX. THE DELIVERED MATTRESS BOX AT SITE SHALL HAVE VERIFICATION BY THE MANUFACTURER, PROPER PACKAGING WITH NO DAMAGE.

2. MESH

THE MESH NETTING JOINED TOGETHER BY TWISTING THE WIRE ROUND EACH OTHER TRIPLE TIMES. IT IS APPROXIMATELY MADE INTO HEXAGONAL OPENING 60 MM ±10% MEASURING FROM DISTANCE BETWEEN WIRE CORES.

3. WIRE

ALL TYPE OF WIRE WHICH A PART OF THE MATTRESS AND WRAPPING WIRE SHALL CONFORM WITH BS 1052/1980 (MILD STEEL WIRE STANDARD) AND HAVE YIELD TENSILE STRENGTH NOT LESS THAN 38 KG/MM2.

4. WIRE ELONGATION

THE WIRE CORE WITHOUT PVC COATING SHALL HAVE ELONGATION NOT LESS THAN 12% ACCORDING TO TENSION TEST ON THE SAMPLE 0.30 M LONG.

5. WIRE COATING

THE WIRE WHICH USING IN MADE OF MATTRESS BOX INCLUDING WRAPPING WIRE SHALL BE COATED WITH ZINC WHICH CONFORM WITH BS 443/1982 OR TIS–71 OR COATED WITH AL–ZINC WHICH CONFORM WITH ASTM A856/A 856M–98 (ZINC–5% ALLUMINUMMISCHMETAL ALLOY COATED CARBON STEEL WIRE.

THE MINIMUM WEIGHT OF WIRE COATING IS SHOWN;

WIRE'S DIAMETER	WIRE'S TYPE	WEIGHT OF COATING
2.0, 2.2 MM (±0.06)	WRAPPING	240 GM/M²
2.0, 2.2 MM (±0.06)	NETTING	240 GM/M²
2.7 MM (±0.08)	FRAME	240 GM/M²

FOR THE WIRE WITH HAVE ADDITIONAL PVC COATING, THE THICKNESS OF PVC COATING IS 0.4–0.5 MM (FOR EXAMPLE, 2.2 MM DIAMETER WIRE WITH PVC COATED SHALL HAVE TOTAL THICKNESS AS 3.2 MM APPROXIMATELY).
BONDING BETWEEN WIRE AND ZINC COATING CAN BE TESTED BY 6 ROUND WRAPPING THE WIRE AROUND STEEL ROD WHICH BIGGER THAN A WIRE FOR 4 TIMES DIAMETER, ZINC COATING SHALL NOT BE RUPTURED AND NOT DISINTEGRATION WHEN POLISHED BY HAND.

6. SELVEDGES

THE SAME MATTRESS BOX SHALL BE REINFORCED WITH A WIRE FRAME BY MACHINE TO BE STRONG MESH. THE DIAPHRAGM PANEL SHALL HAVE 2 LAYERS AND FIXED TOGETHER WITH THE MATTRESS BOX. THE REINFORCED WIRE SHALL BE BIGGER THAN WIRE MESH, FOR THE OPENING MESH SIZE 6 CM WHICH USED WIRE SIZE 2.2 MM SHALL BE REINFORCED A FRAME BY WIRE SIZE DIAMETER NOT LESS THAN 2.7 MM.

7. DIMENSION OF MATTRESS BOX

STANDARD SIZE OF MATTRESS SHALL BE FOLLOWED;
- WIDTH = 1.00, 2.00 M.
- LENGTH = 2.00, 3.00, 4.00, AND 6.00 M.
- HEIGHT = 0.17, 0.23, AND 0.30 M.

8. WRAPPING WIRE

THE WRAPPING WIRE FOR FASTENING DIAPHRAGM PANEL, TOP COVER PANEL, AND CONNECTING EACH MATTRESS BOX TO EACH OTHER SHALL PROVIDE NOT LESS THAN 3% BY TOTAL WEIGHT OF MATTRESS BOX. SIZING OF WRAPPING WIRE IS 2.0 AND 2.7 MM.

9. TOLERANCE

THE ACCEPTABLE TOLERANCE FOR THE WIDTH, LENGTH AND HEIGHT IS 5%.

10. BEFORE CONSTRUCTION

THE CONTRACTOR SHALL SUBMIT THE MATERIAL 1 PANEL AS SITE 1.0X1.0 M FOR APPROVAL IN ACCORDANCE WITH SPECIFICATION NO.2 TO NO.8.

11. ROCK

THE ROCKS USED FOR THIS WORK SHALL BE CLEAN AND HARD ENOUGH, ROCKS SHALL NOT CRUMBLE WHEN WET AND ENDURE REGARDLESS OF THE CLIMATE. THEY ARE LIMESTONE, SANDSTONE, GRANITE, AND BASAL. THE AVERAGE SIZE SHOULD BE 60–100 MM.

TABLE 1 THE RELATIONSHIP BETWEEN MATTRESS THICKNESS, ROCKS SIZE, AND FLOW VELOCITY

TYPE	THICKNESS (M)	ROCK SIZE (M)	FLOW VELOCITY (M/S)
MATTRESS	0.17	0.07 – 0.15	4.00
	0.23	0.07 – 0.15	4.50
	0.30	0.10 – 0.15	5.00

NOTE: IN CASE OF THE FLOW VELOCITY IS HIGHER THAN 5 M/S, GABION SHALL BE CONSIDERED TO APPLY.

REMARK:

1. ALL DIMENSION ARE IN METER UNLESS OTHERWISE INDICATE.
2. THE DESIGNER SHALL CONSIDER THE SEVERITY OF EROSION IN ORDER TO SELECT THE SUITABLE THICKNESS OF MATTRESS. GENERALLY THERE ARE 3 SIZE OF THICKNESS WHICH CONSISTS OF 0.17 M, 0.23 M, AND 0.30 M., MOREOVER THE DESIGNER SHALL CONSIDER THE CONTAINING MATERIAL FOR MATTRESS FROM LOCAL MATERIAL CAUSE OF REDUCTION OF CONSTRUCTION COST.
3. THE MATTRESS IS MAINLY PROPOSED FOR EROSION PROTECTION FROM FLOW VELOCITY AND SURFACE WATER RUNOFF ONLY. IT IS NOT INCREASE THE STABILITY TO THE SLOPE, THE DESIGNER SHALL BE SURE THIS SLOPE HAS ADEQUATE STABILITY.
4. THE WIRES COATED WITH AL–ZINC SHALL BE SELECTED IN CASE OF HIGH EROSION DUE TO ENVIRONMENTAL ESPECIALLY BY THE WATER SUCH AS CHANNEL, WATERWAY, OR RIVER. THE WIRES COATED WITH PVC SHALL BE APPLIED IN ENVIRONMENTAL AS ACID SOIL, HIGH SODIUM MINERAL IN SOIL, OR ALONG THE SEASIDE.

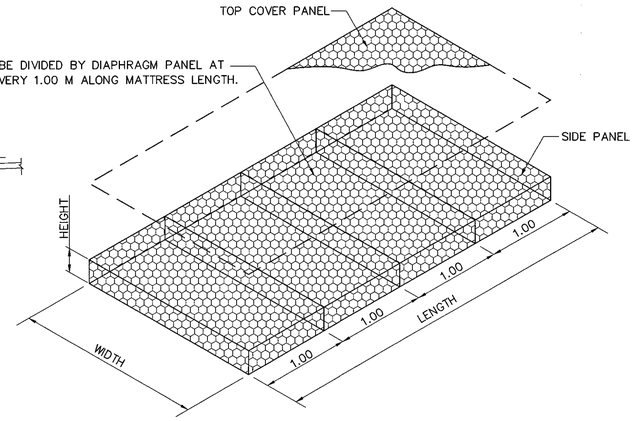

ROCK–AND–WIRE MATTRESS
DIMENSION

KINGDOM OF THAILAND

MINISTRY OF TRANSPORT
DEPARTMENT OF HIGHWAYS

STANDARD DRAWING

SLOPE PROTECTION FOR FILL SLOPE
ROCK–AND–WIRE MATTRESS

DESIGNED : D.O.H. & CONSULTANTS	CHECKED : BUREAU OF LOCATION & DESIGN		DATE : OCT 2015
SUBMITTED : (DIRECTOR OF LOCATION & DESIGN BUREAU)			SCALE : AS SHOWN
APPROVED : (FOR DIRECTOR GENERAL)			DWG NO. SP–104
			SHEET NO. 123

REF.	REVISION	SIGNATURE	DATE

D:\std dwg 2015\SP–104(REV00)

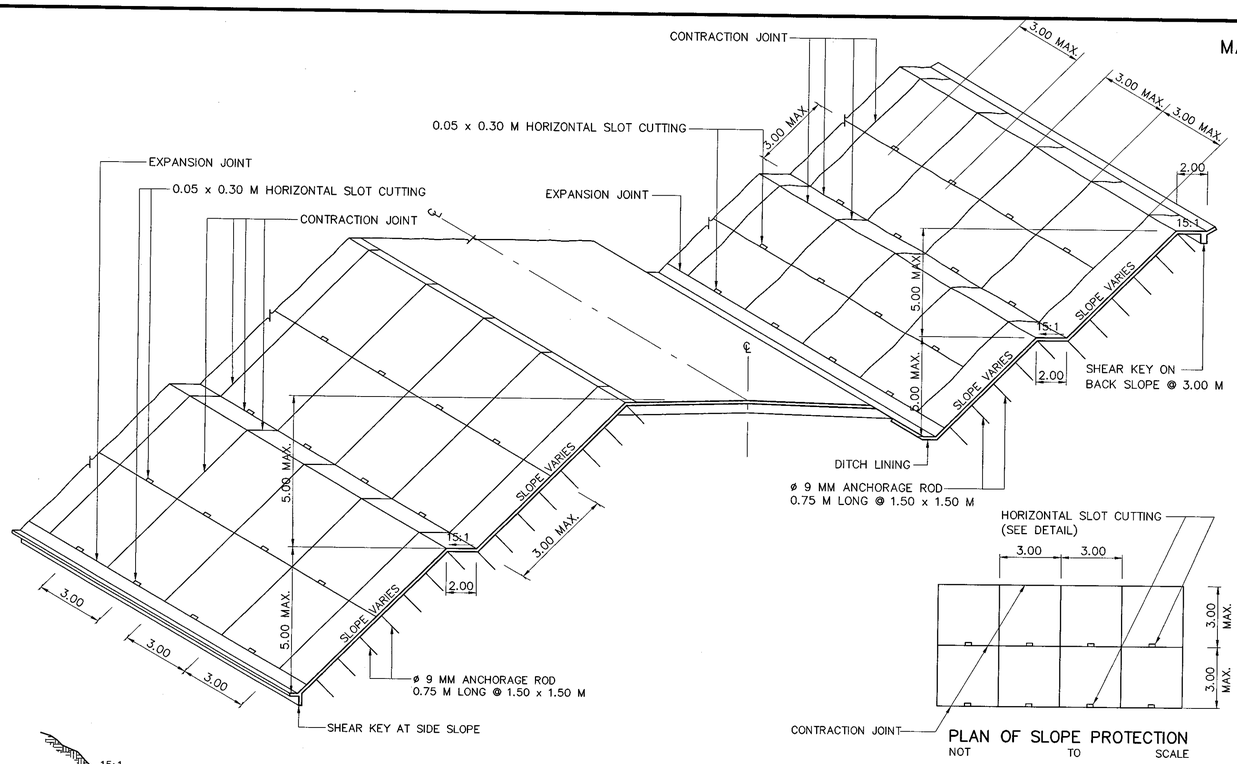

PLAN OF SLOPE PROTECTION
NOT TO SCALE

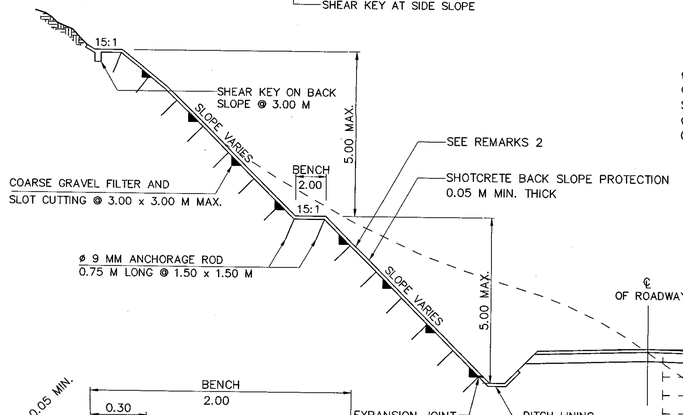

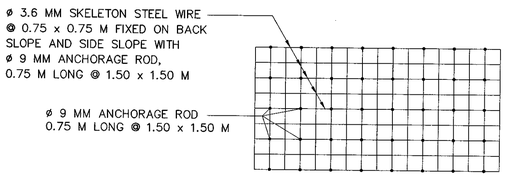

PLAN OF SKELETON STEEL WIRE
NOT TO SCALE

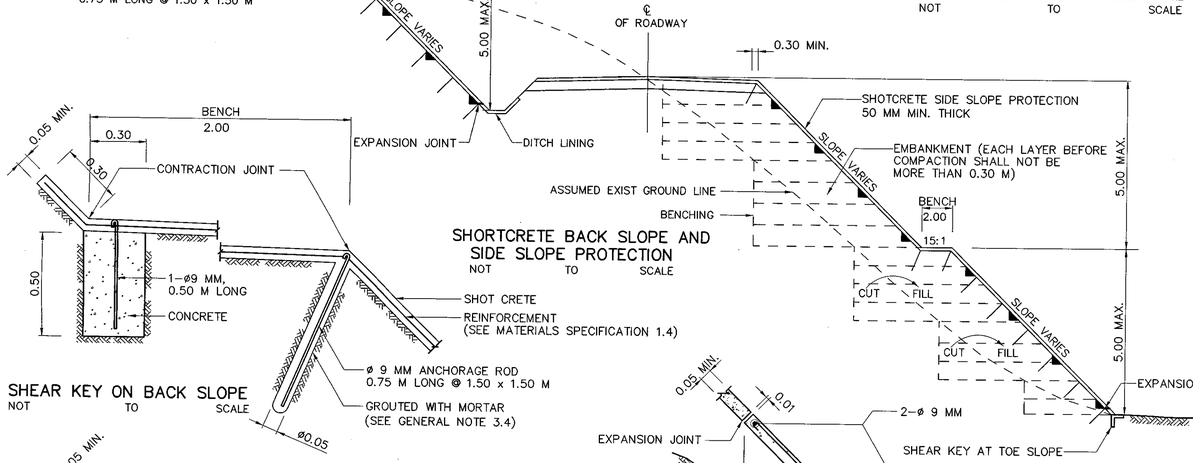

SHORTCRETE BACK SLOPE AND SIDE SLOPE PROTECTION
NOT TO SCALE

SHEAR KEY AT TOE SLOPE
NOT TO SCALE

SHEAR KEY ON BACK SLOPE
NOT TO SCALE

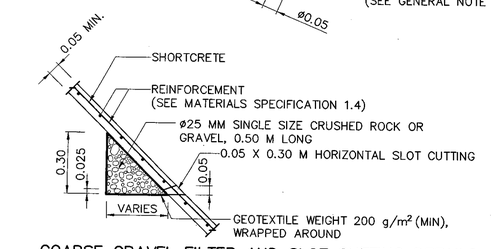

COARSE GRAVEL FILTER AND SLOT CUTTING DETAILS
NOT TO SCALE

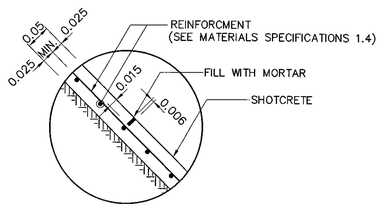

CONTRACTION JOINT DETAILS
NOT TO SCALE

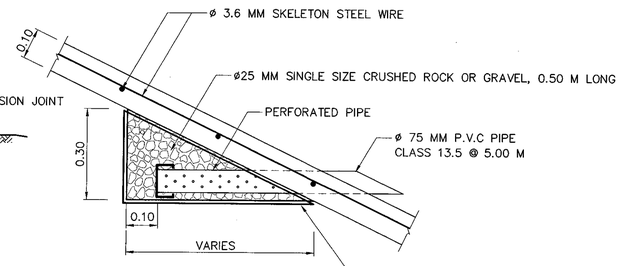

PERFORATED PIPE DETAIL
SCALE 1 : 10

MATERIALS SPECIFICATION:

1. SHOTCRETE

1.1 PORTLAND CEMENT TYPE I SHALL CONFORM TO TIS. 15. AN APPROXIMATE CONCRETE MIX SHALL BE PORTLAND CEMENT : FINE AGGREGATE OR SAND : COARSE AGGREGATE RATIO 1:2:2 BY VOLUME, WATER–CEMENT RATIO (W/C) = 0.40.

1.2 FINE AGGREGATE AND COARSE AGGREGATE SHALL CONFORM TO ONE OF THE FOLLOWING GRADING REQUIRMENTS.

SIEVE DESIGNATION	PERCENTAGE BY WEIGHT PASSING			
	FINE AGGREGATE	COARSE AGGREGATE		
		TYPE A	TYPE B	TYPE C
1"	–	–	–	100
3/4"	–	–	100	90–100
1/2"	–	100	90–100	–
3/8"	100	85–100	40–70	20–55
No.4	95–100	10–30	0–15	0–15
No.8	80–100	0–10	0–5	0–5
No.16	50–85	0–5	–	–
No.30	25–60	–	–	–
No.50	10–30	–	–	–
No.100	2–10	–	–	–

1.3 SHOTCRETE SHALL HAVE A MINIMUM ULTIMATE COMPRESSIVE STRENGTH OF 28 MPa (280 KSC.) FOR 0.15x0.15x0.15 M. CUBE OR 25 MPa (250 KSC.) FOR ø 0.075 M. CYLINDER AT 28 DAYS.

1.4 REINFORCING STEEL FOR SHOTCRETE CAN BE EITHER OF THESE :

1.4.1 WELDED WIRE FABRIC ø 3.55 OR 3.15 MM. @ 0.075 X 0.075 M. WIRE SHALL CONFORM TO AASHTO DESIGNATION M 55 – 75 (ASTM DESIGNATION A 185 – 73) OR AASHTO DESIGNATION M 32 – 78 (ASTM DESIGNATION A 82 –76)

1.4.2 HEXAGONAL STEEL WIRE MESH SHALL CONFORM TO TIS. 208 TYPE "A". THE STEEL WIRE MESH IS 1.25 MM. DIAMETER. THE SIZE OF MESH IS 52 MM., AND PITCH LENGTH IS 55.2 MM. THE SKELETON STEEL WIRE SHALL CONFORM TO TIS. 747.

1.4.3 50 X 50 MM. SQUARE WELDED WIRE MESH OF 2 MM. DIAMETER WIRE SHALL CONFORM TO TIS. 747.

1.5 ANCHORAGE ROD SHALL CONFORM TO TIS. 20 GRADE SR. 24.

2. SHEAR KEY

2.1 CONCRETE SHALL HAVE A MINIMUM ULTIMATE COMPRESSIVE STRENGTH OF 25 MPa(250 KSC.) FOR 15x15x15 CM. CUBE AT 28 DAYS.

2.2 REINFORCING STEEL SHALL CONFORM TO TIS. 20 GRADE SR. 24.

3. FILTER MATERIAL

3.1 SIZE OF COARSE GRAVEL FILTER SHALL BE SINGLE SIZE AS ø25 MM.

3.2 P.V.C. PIPE SHALL CONFORM TO TIS. 17 CLASS 13.5.

3.3 GEOTEXTILE SHALL BE NONWOVENS TYPE, WEIGHT 200 G./M^2.(MIN.) SHALL CONFORM TO ASTM. 3776

CONSTRUCTION PROCESS :

1. BACK SLOPE PROTECTION

1.1 THE SHOTCRETE BACK SLOPE PROTECTION AS SHOWN ON THIS DRAWING SHALL APPLY FOR SOFT ROCK BACK SLOPE ONLY.

1.2 PRIOR TO SHOTCRETING, THE BACK SLOPE SHALL BE FURNISHED AND CLEAN. AND SLOPE ANGLE SHALL NOT BE STEEPER THAN THE SPECIFIED TYPICAL CROSS SECTION IN DRAWING NO. TS–401.

2. SIDE SLOPE PROTECTION

2.1 CUT OFF LOOSED SOIL ON THE EXISTING SIDE SLOPE.

2.2 IN CASE OF THE EXISTING SIDE SLOPE IS FLATTER THAN THAT MENTIONED IN THE TYPICAL CROSS SECTION DRAWING, WELL COMPACT THE EXISTING SIDE SLOPE AND COVER IT WITH SHOTCRETE SIDE SLOPE PROTECTION AS IN THE FIGURE.

2.3 IN CASE OF THE EXISTING SIDE SLOPE IS STEEPER THAN WHICH MENTIONED IN THE TYPICAL CROSS SECTION DRAWING, THE EXISTING SIDE SLOPE SHALL BE BENCHING AND FILLED WITH COMPACTED SOIL THE THICKNESS OF EACH LAYER IS NOT MORE THAN 30 CM., COMPACTED TO 95% OF THE STANDARD MAXIMUM DRY DENSITY (DOH.–T.107/2517) AND COVERED WITH SHOTCRETE SIDE SLOPE PROTECTION AS PRESENTED IN THE FIGURE.

3. GENERAL NOTES

3.1 WELDED WIRE MESH SHALL BE PUT IN THE MIDDLE OF SHOTCRETE SLAB AND CONNECTED AS THE INNER–LONG SIDE AND WIDE SIDE ARE AT LEAST 15 CM. OVERLAPPING.

3.2 IN CASE OF HEXAGONAL STEEL WIRE MESH OR SQUARE WELDED WIRE IS USED, ITS INNER–LONG SIDE AND WIDE SIDE ARE AT LEAST 10 CM. OVERLAPPING AND TIED WITH STEEL WIRE AT EVERY 10 CM.

3.3 FOR SOFT SOIL OR SAND, THE FIRST LAYER OF SHOTCRETE SHALL BE THIN LAYER AND APPLIED THROUGHLY THE DESIGNATED AREA. AFTER WAITING ABOUT 15 MINUTES OR SETTING TO STIFFEN, THE SECOND LAYER OF SHOTCRETE SHALL BE APPLIED TO MEET THE SPECIFIED THICKNESS.

3.4 FOR GRANULAR SOIL, THE ANCHORAGE ROD ø 9 MM. SHALL BE GROUTED WITH MORTAR CEMENT: SAND RATIO = 1:3 BY VOLUME (ø5 CM. APPROXIMATELY).

3.5 IF WATER SEEPAGE IS APPEARED, SLOT AND COARSE GRAVEL FILTER SHALL BE ADDED. NUMBER AND LOCATION SHALL BE DIRECTED BY THE PROJECT ENGINEER.

3.6 IF SEEPAGE FLOW IS HIGH, PERFORATED PIPE SHALL BE INSTALLED WITH ITEM 3.5, AS DIRECTED BY THE PROJECT ENGINEER.

3.7 MORTAR CEMENT : SAND RATIO = 1:3 BY VOLUME, SHALL BE USED TO FILL CONTRACTION AND EXPANSION JOINTS.

3.8 THE BOUNDARY OF SHOTCRETE CONSTRUCTION SHALL BE AT THE BEGINNING AND END OF EROSION AND AT THE BEGINNING, SHOTCRETE SHALL BE CONSTRUCTED AT THE SUITABLE DISTANCE PRIOR TO THE EROSION POINT.

3.9 PAYMENT OF SHOTCRETE SHALL BE MEASURED BY SQUARE METER INCLUDING PREPARED AND COMPACTED EXISTING SLOPE, EXPANSION JOINT, CONTRACTION JOINT, COARSE GRAVEL FILTER, ø 0.9 MM. ANCHORAGE ROD, MORTAR GROUTING AND ANY OTHER INCIDENTAL WORKS OF SHOTCRETE.

3.10 FOR BACK SLOPE CUTTING OR LOOSED SOIL CUTTING ON SIDE SLOPE, THE PAYMENT SHALL BE EXCAVATION ITEM.

3.11 ALL DIMENTIONS ARE IN METERS UNLESS OTHERWISE SPECIFIED.

WARRANTING FEATURES FOR SHOTCRETE CONSTRUCTION

1. THIS METHOD OF SLOPE PROTECTION IS SUITABLE ONLY IN SPECIFIC LOCATIONS AND CERTAIN CONDITIONS, IT SHOULD BE APPLIED WITH THE FIRM INFORMATION CONCERNED AND RECOMMENDED BY THE ENGINEER AND THE GEOLOGIST.
2. THE SLOPE CUT AND FILL SHALL BE STABLE.
3. NOT RECOMMENDED FOR HIGHWAYS LEADDING TO PLACES TO VISIT OR VIEWING POINTS.

REF.	REVISION	SIGNATURE	DATE

KINGDOM OF THAILAND

MINISTRY OF TRANSPORT

DEPARTMENT OF HIGHWAYS

STANDARD DRAWING

SLOPE PROTECTION FOR CUT SLOPE SHOTCRETE

DESIGNED : D.O.H. & CONSULTANTS	**CHECKED :** BUREAU OF LOCATION & DESIGN	**DATE :** OCT 2015
SUBMITTED :	(DIRECTOR OF LOCATION & DESIGN BUREAU)	**SCALE :** AS SHOWN
APPROVED :	(FOR DIRECTOR GENERAL)	**DWG NO.** SP–201
		SHEET NO. 124

D:\std dwg 2015\SP-201(REVOO)

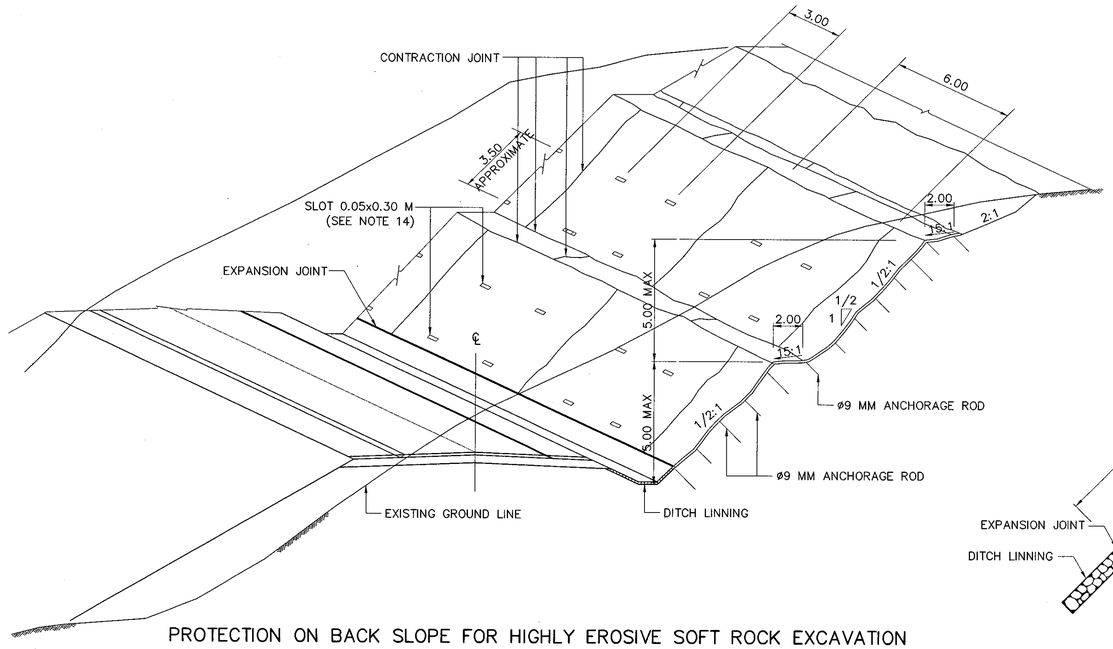

PROTECTION ON BACK SLOPE FOR HIGHLY EROSIVE SOFT ROCK EXCAVATION

NOT TO SCALE

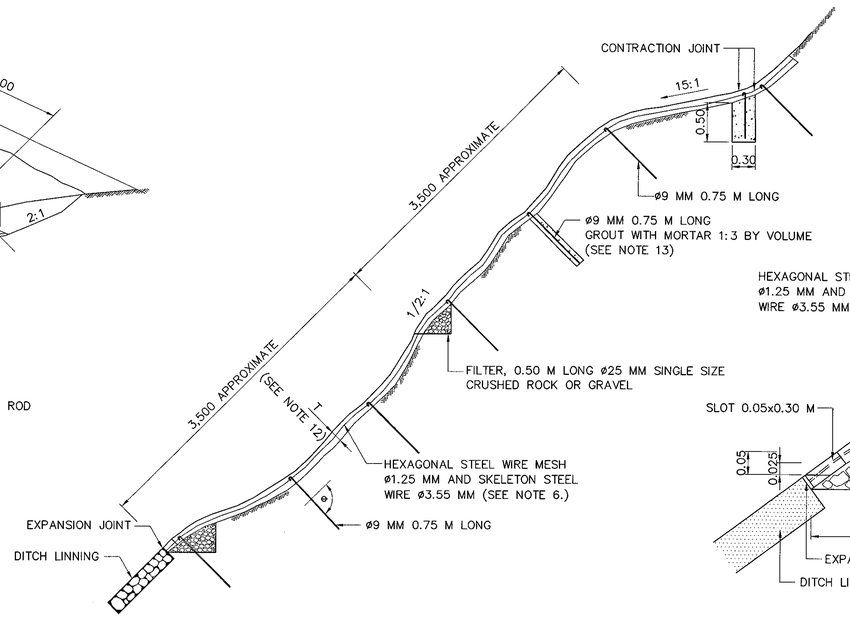

DETAIL OF BACK SLOPE PROTECTION

NOT TO SCALE

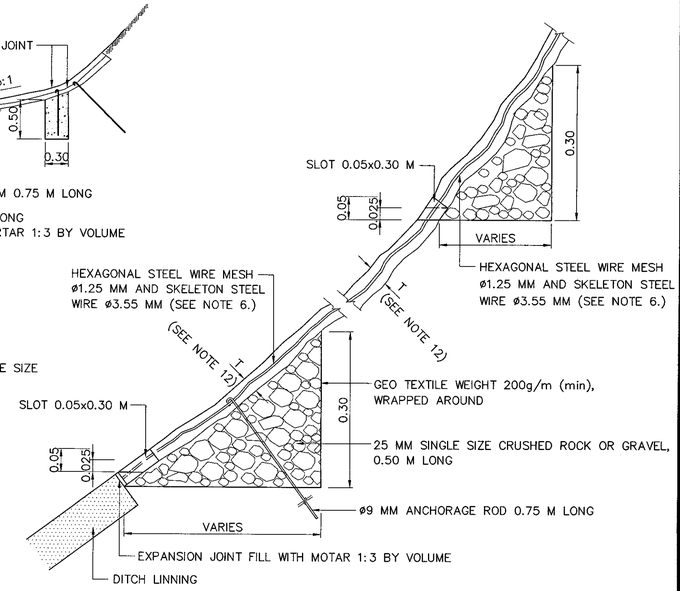

DETAIL OF COARSE GRAVEL FILTER FOR AREA OF SEEPAGE

NOT TO SCALE

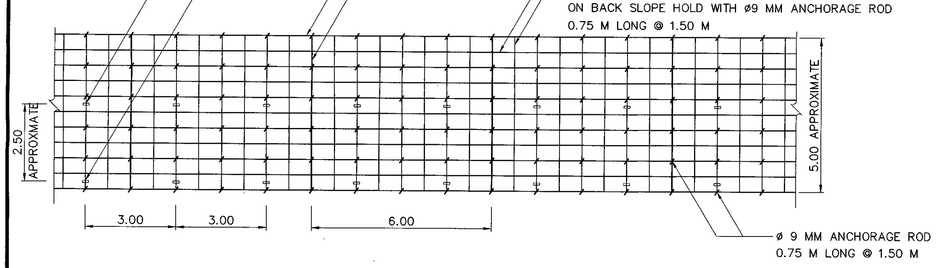

PLAN OF BACK SLOPE PROTECTION

SCALE 1:100

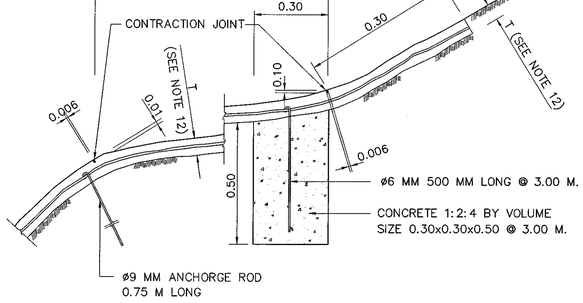

DETAIL OF ANCHORAGE ROD

NOT TO SCALE

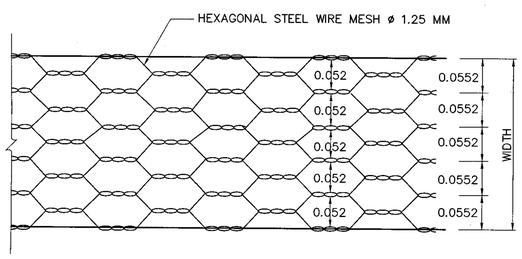

DETAIL OF HEXAGONAL STEEL WIRE MESH

NOT TO SCALE

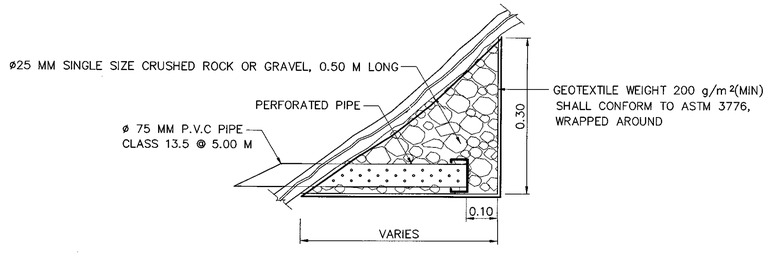

PERFORATED PIPE DETAIL

SCALE 1 : 10

NOTE :

1. ALL DIMENSION ARE IN METERS UNLESS OTHERWISE INDICATED.
2. THE FERRO–CEMENT BACK SLOPE PROTECTION AS SHOWN ON THIS DRAWING SHALL APPLY FOR HIGHLY EROSIVE SOFT ROCK BACK SLOPE ONLY AND UNDER THE DIRECTION OF THE ENGINEER AND GEOLOGIST.
3. PRIOR TO CONSTRUCTION , THE BACK SLOPE SHALL BE FURNISHED AND WELL COMPACTED TO THE SPECIFIED CROSS SECTION.
4. THE MORTAR PROPORTION SHALL BE CEMENT : SAND RATIO 1:1.75 BY WEIGHT AND W/C RATIO = 0.40.
5. CEMENT SHALL CONFORM TO AASHTO M 85 TYPE I (EQUIVALENT TIS STANDARD CEMENTS ARE ACCEPTABLE).
6. HEXAGONAL STEEL WIRE MESH SHALL CONFORM TO TIS 208 TYPE "A". THE SIZE OF MESH IS 0.052 M. AND PITCH LENGTH IS 0.0552 M. 0.05 X 0.05 M. SQUARE WELDED WIRE FRABRIC OF 2 MM. DIAMETER WIRE SHALL BE USED INSTEAD OF HEXAGONAL STEEL WIRE MESH, PROVIDED THAT THE STEEL WIRE SHALL CONFORM TO TIS. 194. RUSTY WIRE SHALL NOT BE USED.
7. SKELETON STEEL WIRE (FOR HEXAGONAL STEEL WIRE MESH ONLY) SHALL CONFORM TO TIS 194.
8. ANCHORAGE ROD SHALL CONFORM TO TIS. 20 GRADE SR 24.
9. LAPPING OF HEXAGONAL STEEL WIRE MESH SHALL NOT BE LESS THAN 0.05 AND 0.10 M FOR NARROW SIDE AND LONG SIDE RESPECTIVETY, AND TIED WITH STEEL WIRE AT EVERY 0.10 MM
10. CONTRACTION JOINT AND EXPANSION JOINT SHALL BE SEALED WITH MORTAR 1:3 BY VOLUME.
11. SIZE OF COARSE GRAVEL FILTER SHALL BE BETWEEN 9 MM. AND 50 MM.
12. THE THICKNESS(T) OF FORRO–CEMENT SHALL BE VARIED FROM 0.03 TO 0.05 M DEPENDING ON SMOOTHNESS OF BACK SLOPE AREA.
13. IF SOIL CONDITION ON BACK SLOPE IS GRANULAR SOIL, THE ANCHORAGE ROD SHALL BE GROUTED WITH MORTAR (1:3 BY VOLUME) 0.05 M. WIDE.
14. AS DIRECTED BY THE ENGINEER PERFORATED PIPE SHALL BE SUBSTITUTED FOR DRAINAGE SLOT IN AREA WHERE SEEPAGE FLOW IS HIGH.
15. BY THE APPROVAL OF THE ENGINEER, THE CONTRACTOR MAY USE THE SHOTCRETE SYSTEM IN APPLYING MORTAR.
16. GEOTEXTILE SHALL BE NONWOVENS TYPE, WEIGHT 200 G./M^2(MIN) SHALL CONFORM TO ASTM. 3776.
17. IF NECESSARY, THE SLOPE MAY BE SHAPED TO INCLUDE A STEPS WITH 1.00 M WIDE FOR MAINTENANCE PURPOSE.
18. THE BOUNDARY OF FERRO–CEMENT CONTRUCTION SHALL BE AT THE BEGINNING AND END OF EROSION ZONE AND AT THE BEGINNING, FERRO–CEMENT SHALL BE CONSTRUCTED AT A SUITABLE DISTANCE BEYOND TO THE EROSION ZONE.
19. ALL MATERIALS WITH SPECIFIED TIS STANDARD MAY BE REPLACED WITH EQUIVALENT AASHTO STANDARD IF APPLICABLE.

WARRANTING FEATURES FOR FERRO–CEMENT CONSTRUCTION

1. THE EXISTING SLOPES MUST BE STABLE.
2. EROSION OF WATER APPEARS BUT NOT SLIDE.
3. NOT RECOMMENDED FOR HIGHWAY LEADING TO SCENIC VIEWING POINT.
4. THIS METHOD OF SLOPE PROTECTION IS SUITABLE ONLY IN SPECIFIC LOCATIONS CERTAIN CONDITIONS, IT SHOULD BE APPLIED WITH THE FIRM INFORMATIONS CONCERMED AND RECOMMENDED BY THE ENGINEER AND GEOLOGIST

REF.	REVISION	SIGNATURE	DATE

KINGDOM OF THAILAND

MINISTRY OF TRANSPORT
DEPARTMENT OF HIGHWAYS

STANDARD DRAWING

SLOPE PROTECTION FOR CUT SLOPE
FERRO–CEMENT

DESIGNED : D.O.H. & CONSULTANTS	**CHECKED :** BUREAU OF LOCATION & DESIGN	**DATE :** OCT 2015
SUBMITTED :	(DIRECTOR OF LOCATION & DESIGN BUREAU)	**SCALE :** AS SHOWN
		DWG NO. SP–202
APPROVED :	(FOR DIRECTOR GENERAL)	**SHEET NO.** 125

D:\std dwg 2015\SP-202(REV00)

VETIVER GRASSING FOR HIGHWAY SLOPE PROTECTION

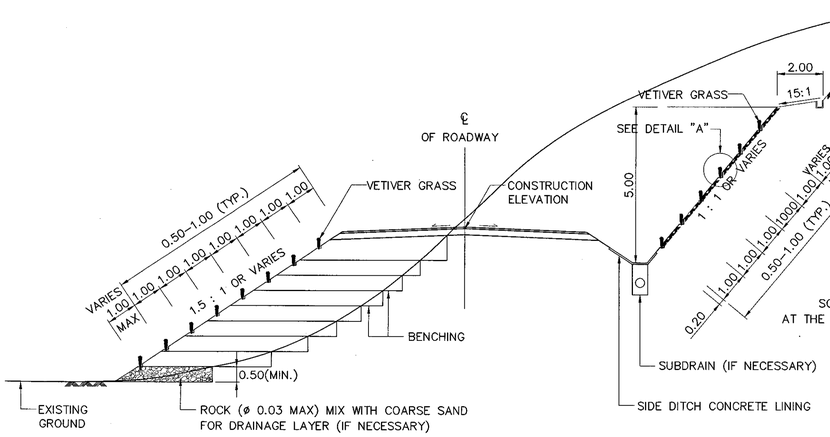

SECTION OF VETIVEL GRASSING ON BACK SLOPE AND SIDE SLOPE

NOT TO SCALE

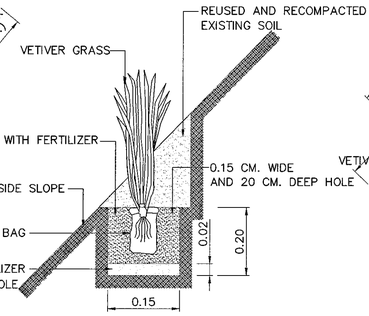

DETAIL "A"

NOT TO SCALE

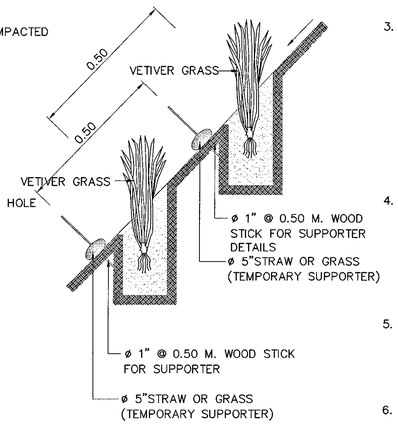

SECTION

NOT TO SCALE

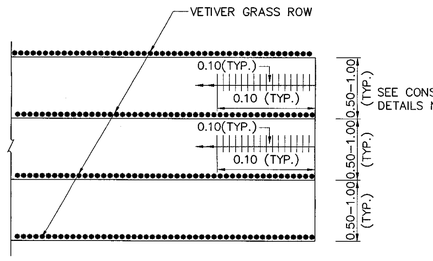

PLAN OF VETIVER GRASSING ROW ON BACK SLOPE AND SIDE SLOPE

NOT TO SCALE

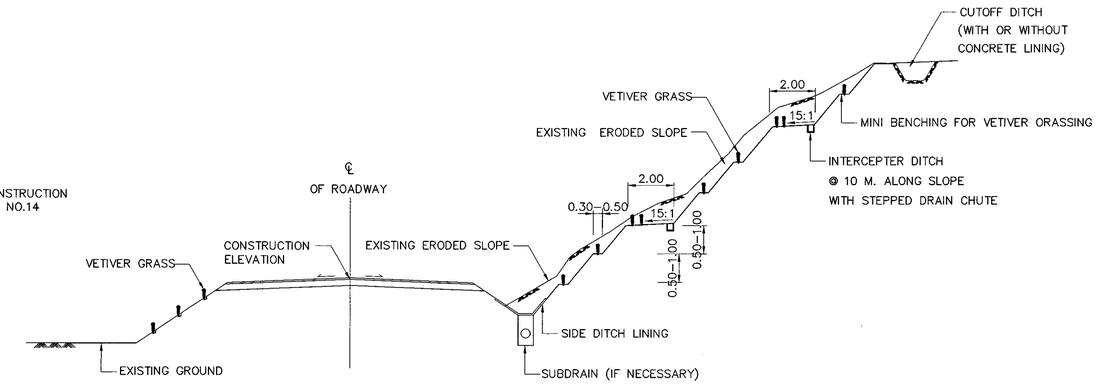

SECTION OF VETIVER GRASSING ON BACK SLOPE

NOT TO SCALE

(FOR ERODED SLOPE/MOVED SLOPE)

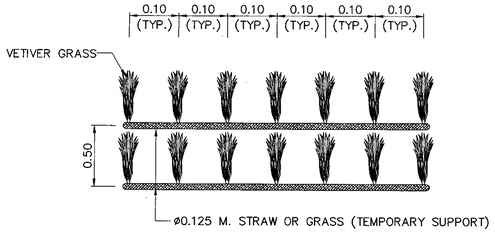

PLAN

PLAN OF VERTIVER GRASSING ON SEVERE ERESION AREA

NOT TO SCALE

(SEE CONSTRUCTION DETAIL NO.13)

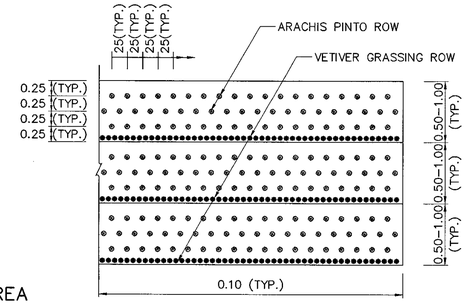

PLAN OF VETIVER GRASSING WITH ARACHIS PINTO

NOT TO SCALE

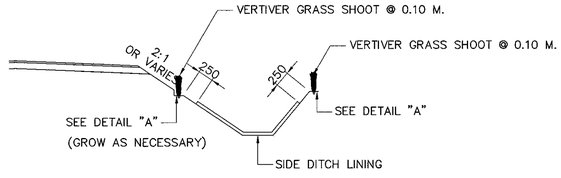

VETIVER GRASSING FOR DITCH PROTECTION

NOT TO SCALE

CONSTRUCTION DETAILS

1. ALL DIMENSIONS ARE IN METERS UNLESS OTHERWISE SPECIFIED.
2. VETIVER GRASSING CAN BE ALSO APPLIED TO PROTECT THE EROSION OF ROADWAY SLOPE, EMBANKMENT ROAD, BRIDGE APPROACH SLOPE AND DITCH. THE VETIVER SHALL GROW WELL WHEN PLANTING IN SUITABLE SOIL. THE MAXIMUM SLOPE GRADIENT SHOULD BE EQUAL OR LESS THAN 0.5:1(H:V). THE SUITABLE PERIOD FOR PLANTING SHALL BE BEFORE RAINY SEASON AND THE CONTRACTOR SHALL STRICTLY FOLLOW CONSTRUCTION DETAILS.
3. THE VETIVER GRASS SHOOTS : VETIVER (VETIVERIA ZIZANIOIDES NASH) SHALL BE LOCAL KIND OR ANY OTHER APPROPRIATE ONES WHICH IS SUITABLE FOR WEATHER CONDITION AND LOCATION AS APPROVED BY DESIGN DIVISION OF D.O.H. THE VETIVER SHOOT SHALL BE PLANTED CONFORM TO TECHNICAL OF AGRICULTER BEFORE PLANTING. THE VETIVER SHOOTS SHOULD BE RESTED IN A POLY BAG WHICH HAS DIAMETER OF 5 CM AND THE LENGTH OF 10–15 CM (SIDE FOLD) OR ANY OTHER APPROPRIATE CONTAINER. EACH BAG WHICH CONTAINS SOIL AND FERTILIZER IS TO SERVE 1–2 VETIVER SHOOTS FOR GOOD GROWTH. THE SHOOTS WILL BE RESTED IN THE BAG FOR 1.5 –2 MONTHS BEFORE BEING TAKEN TO THE PREPARED SOIL.
4. HOLE DIG AND GROUND PRENETRATION : AFTER THE WORK FOR BACK SLOPE, SIDE SLOPE, AND BANK SLOPE FINISHED ACCORDING TO CONSTRUCTION DRAWING THEN THE VETIVER GRASSING ROW SHALL BE DEFINED BASED ON THE DRAWING. THE HOLE WHICH IS 15 CM WIDE AND 15–20 CM. DEEP SHALL BE DIGGED (SEE DETAIL A) ALONG THE VETIVER GRASSING ROW. SOIL MIX WITH FERTILIZER OF 2 CM THICK SHALL BE PUT AT THE BOTTOM OF THE HOLE AS DESCRIBED IN CONSTRUCTION DETAILS NO.5.
5. SOIL IMPROVEMENT BEFORE PLANTING: BEFORE PLANTING, THE ONE OF FERTILIZER, 600 GRAMS OF CHICKEN MANURE PELLETS OR 2 KILOGRAMS OF MANURE SHALL BE MIXED WITH 45–60 GRAMS OF CHEMICAL FERTILIZER (15–15–15). THIS PROPORTION OF FERTILIZER PER METER OF VERTIVER GRASS ROW SHALL BE PUT ON THE GROUND.
6. PLANTING: THE SPACE BETWEEN ROW IS 1.0 M OR AS SHOWN IN THIS DRAWING. THE SPACE BETWEEN TWO SHOOTS IS 10 CM. TRIM AND LEAVE THE LEAVES OF SHOOTS FOR 20 CM BEFORE PLANTING. TAKE OFF THE BAG AND PUT THE VETIVER SHOOT ON FERTILIZER WHICH IS AT THE BOTTOM OF THE HOLE ACCORDING TO CONSTRUCTION DETAILS NO.5 THE PREPARED HOLE. FILL THE HOLE AND UNTIL REACH THE TOP SOIL LEVEL IN THE POLY BAG AS SHOWN IN DETAIL A.
7. PEROID FOR PLANTING: THE SUITABLE PERIOD FOR PLANTING SHALL BE EARLY RAINY SEASON, MIDDLE OF APRIL TO MIDDLE OF AUGUST. THE SUITABLE PERIOD FOR PLANTING OF EAST COAST OF SOUTH SHALL BE IN OCTOBER TO JANUARY. THE VETIVER SHALL GROW AT LEAST 2 MONTHS IN RAINY SEASON.
8. CARING AFTER PLANTING: THE CONTRACTOR SHALL TAKE CARE THE SHOOT AND THE RATE OF SURVIVAL OF SHOOT SHOULD BE NOT LESS THAN 95% AFTER 1 MONTH OF PLANTING. IF LESS, THE CONTRACTOR SHALL REDO THE PLANTING WITHIN 15 DAYS. THE NEW PLANTING WILL BE RECHECKED THE RATE OF SURVIVAL AFTER ANOTHER 1 MONTH WITH THE SAME CRITERIA AS FIRST PLANTING.
9. MAINTENANCE AFTER PLANTING (LEAF TRIMMING, WEEDING AND FERTILIZING):
   - 9.1 THE FIRST YEAR: –AFTER 30 DAYS OF PLANTING, FERTILIZER WHICH IS HALF A TEA SPOON OF AMMONIAM SULFATE FERTILIZER (21:0:0) OR ONE–FOURTH OF TEA SPOON OF UREA WILL BE POURED IN EACH HOLE.
   - –LEAF TRIMMING, WEEDING AND FERTILIZING SHALL BE DONE IN AUGUST OR SEPTEMBER. FOR EAST COAST OF SOUTH, MAINTENANCE SHALL BE FERTILIZED IN FEBRUARY.
   - 9.2 THE SECOND YEAR: –PLANT MAINTENANCE SHALL BE DONE IN MAY, AUGUST OR SEPTEMBER. FOR EAST COAST OF SOUTH, THE MAINTENANCE SHALL BE DONE IN NOVEMBER AND FEBRUARY. THE HEIGHT OF THE PLANT FOR 20–30 CM. AFTER THE LEAF TRIMMING, NPK FERTILIZER(15–15–15) SHALL BE PUT ON THE GROUND IN THE PROPORTION 20 GRAMS PER METER OF VETIVER GRASS ROW.
10. VETIVER GRASSING WITH ARACHIS PINTO: THE ARACHIS PINTO WILL BE PLANTED BETWEEN VETIVER GRASS ROW TO REDUCE THE MAINTENANCE COST AFTER PLANTING, TO GET NITROGEN MINERAL AND ALSO LONG LIFE VETIVER GRASS. THE VETIVER GRASSING WITH ARACHIS PINTO WILL NEED ONLY FERTILIZING IN THE FIRST YEAR AND ONLY LEAF TRIMMING IN THE SECOND YEAR.
11. VETIVER GRASSING FOR BANK PROTECTION CAN BE APPLIED TO PROTECT EROSION OF ROADWAY SLOPE ALONG THE RIVER. THE LENGTH OF VETIVER GRASSING SHALL BE DEPENDED ON THE NATURAL OF CONDITION OF THE RIVER AND AS DIRECTD BY THE ENGINEER.
12. REMEDIAL OR MAINTENANCE CASE: FOR ERODED BACK SLOPE OR MOVED SLOPE, THE MINI BENCHING OF 0.5–1.0 M HIGH AND 0.3–0.5 M WIDE WILL BE CONSTRUCTED. THE VETIVER GRASS WILL BE PLANTED ON EACH BENCH.
13. THE DRAINAGE SYSTEM CONSTRUCTION, DIVERSION DITCH, INTERCEPTER DITCH, STEPPED DRAINCHUTE AND SUBDRAIN (IF NECESSARY). SHALL BE CONSIDERED TO BE EFFICIENT. THE LENGTH AND LOCATION SHALL BE CONSIDERED ACCORDING TO SITE CONDITIONS.
14. THE SPACE CHOOSING BETWEEN VETIVER GRASS ROW AND VETIVER SHOOT IS DEPENDED ON THE EROSION CONDITION. THE DISTANCE OF 1.0 M BETWEEN ROW AND THE SPACING BETWEEN TWO SHOOTS IS 0.10 M WILL BE USED IN LOW TO MEDIUM EROSION AREA. HIGH EROSION AREA, THE DISTANCE OF 0.5 M BETWEEN ROW WILL BE USED AS WELL AS THE STRAW OR GRASS DIAMETER OF 125 MM. WILL BE USED AS TEMPORARY SUPPORT AS SHOWN IN SECTION.

REF.	REVISION	SIGNATURE	DATE

KINGDOM OF THAILAND

MINISTRY OF TRANSPORT

DEPARTMENT OF HIGHWAYS

STANDARD DRAWING

SLOPE PROTECTION FOR CUT SLOPE
VETIVER GRASSING

DESIGNED : D.O.H. & CONSULTANTS	**CHECKED :** BUREAU OF LOCATION & DESIGN	**DATE :** OCT 2015
SUBMITTED : (DIRECTOR OF LOCATION & DESIGN BUREAU)		**SCALE :** AS SHOWN
APPROVED : (FOR DIRECTOR GENERAL)		**DWG NO.** SP–203
		SHEET NO. 126

D:\std dwg 2015\SP-203(REV00)

HYDROSEEDING FOR SLOPE PROTECTION

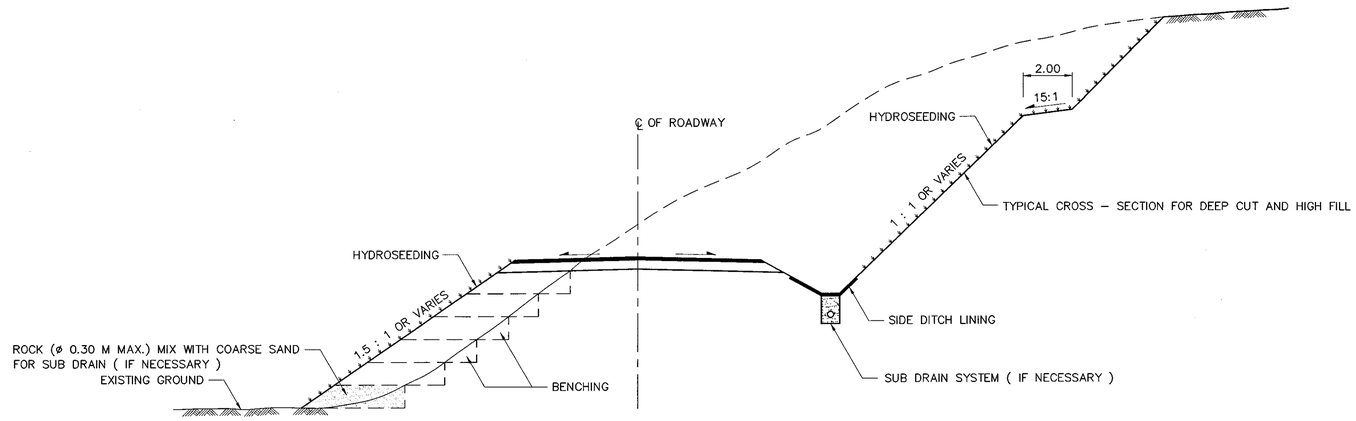

HYDROSEEDING FOR SLOPE PROTECTION

NOT TO SCALE

NOTES:

1. AREA PREPARATION

1.1 AFTER THE EARTH WORKS OF CUT AND FILL ARE FINISHED AS PLANNED, HYDROSEEDING SHOULD BE DONE RIGHT AWAY BEFORE THE OCCURRENCE OF SLOPE EROSION.

1.2 IF THE SURFACE OF BACK SLOPE IS TOO HARD, SHAPE IT BY STRIPPING SOME EXISTING SOIL THAT IS COVERING THE SURFACE. THE SHAPING WILL MAKE THE SURFACE SOFT AND SHOULD LEAVE THE 2.5 CM. THICKNESS OF THE SURFACE. THERE SHOULD BE GROOVED WHICH ARE 5–7 CM. APART ALONG THE LENGTH OF AREA.

1.3 SHAPING THE SURFACE OF THE SIDE SLOPE IS DONE THE SAME WAY AS IN ITEM 1.2 AND YET AS DIRECTED BY THE ENGINEER.

1.4 IN SOME AREAS THAT ARE COVERED WITH BOULDERS, SOFT ROCK OR ROCKS WITH SEEPAGE FLOW OR HAVE RILLS OR GULLIES, THE SOIL SHAPING SHOULD BE DIRECTED BY THE ENGINEER.

2. SUGGESTED GRASS AND QUANTITIES OF ITS SEEDS

2.1 IN GENERAL, THE SUGGESTED GRASS IS THAT OF LOCAL KINDS OR ANY KINDS THAT HAVE BEEN WELL GROWN IN THAILAND. THE GRASS USED AS PERMANENT GRASS FOR PREVENTION SOIL EROSION SHOULD BE PERENNIAL GRASS AND HAS STRONG ROOTS SYSTEM THAT CAN FIRMLY HOLD TO THE GROUND AND CAN BEAR ANY BAD STATE OF SOIL. WHILE IN USE, THE GRASS SHOULD BE MIXED WITH BEAN PLANTS WHICH WILL BE A NITROGEN CATCHER OR MIXED WITH SHORT–LIFE GRASS WHICH WILL BE SCARIFY GRASS, AS DIRECTED BY THE ENGINEER.

2.2 SUGGESTED GRASS AND QUALITY OF ITS SEEDS
ANY OTHER KINDS THAT HAVE THE SAME QUALITIES AS MENTIONED IN ITEM 2.1 CAN ALSO BE USED, YET AS DIRECTED BY THE ENGINEER AND APPROVAL BY THE LOCATION AND DESIGN DIVISION D.O.H.

NO.	COMMON NAMES	SCIENTIFIC NAMES	QUALITY OF SEED			NOTE
			MOISTURE NOT MORE THAN (%)	PURITY NOT LESS THAN (%)	RATE OF GROWTH NOT LESS THAN (%)	
1	หญ้ารูซี	BRACHIARIA RUZIZIENSIS	10	70	50	
2	หญ้าพลิแคทูลัม	PASPALUM PLICATULUM	10	60	40	
3	หญ้าแพรก	CYNODON DACTYLON	10	50	30	BREED WITH STEM
4	หญ้าซิกแนลเลื่อย	BRACHIARIA HUMIDICOLA	10	–	–	BREED WITH ROOTS, STEM
5	หญ้าสตาร์	CYNODON PLECTOSTACHYUS SPP.	10	–	–	BREED WITH ROOTS, STEM
6	หญ้าบาเฮีย	PASPALUM NOTATUM	10	50	30	BREED WITH ROOTS
7	หญ้าหวาย	ERAGROSTIS DIPLACHNOIDES	10	50	30	
8	หญ้า WEEPING	ERAGROSTIS PARVIFLORA	10	50	30	
	LOVE GRASS	ERAGROSTIS CURVULA				
9	หญ้าตีนกา	ELEUCINE INDICA	10	40	25	
10	หญ้า RYE	LOLIUM PERENNE	10	50	30	
11	หญ้า FESCUE	FESTUCA ELATOR	10	50	30	GOOD FOR COLD WEATHER
12	หญ้า ACACIA	ACACIA SPP.	10	50	30	
	พืชตระกูลถั่ว					
13	ถั่วลาย	CENTROSEMA PUBESCENS	10	90	50	
14	ถั่วอามาด้า	STYLOSANTHES HAMATA	10	70	30	
15	ถั่วซิราโตเร	MACROPTILIUM ATROPURPUREUM	12	90	50	

2.3 TWO KINDS OF GRASS OR MORE AS MENTIONED IN ITEM 2.2 SHOULD BE USED TOGETHER ACCORDING TO THE SITE. THE PROPORTION OF THE GRASS MIXED SHOULD BE 15 GM/M2 AND BEANS WITH RATE OF GROWTH 10–15 STEMS/M2.

2.4 THE PROPORTION OF THE SEEDS IN ITEM 2.3 CAN BE REDUCED FOR THE GRASS THAT CAN BREED WITH STEM OR ROOTS, YET AS DIRECTED BY THE ENGINEER (SEE ITEM 3.1).

3. OTHER MATERIALS

3.1 LOCAL GRASS STEMS SHOULD BE MIXED BY CUTTING THE GRASS INTO PIECES WITH A MINIMUM OF 4 NODES AND 60–100 PIECES/M2 VOID.

3.2 ACID DILUTE : IN GENERAL, THE PH OF SOIL SUITABLE FOR GRASSING IS ABOUT 5–8. IF THE SOIL HAS CONCENTRATED ACID, USE THESE CHEMICAL TO DILUTE THE ACID CONDITION OF THE SOIL;
3.2.1 CRUSHED AND BURNED OYSTER SHELL OR
3.2.2 DOLOMITE :
THE SUITABLE PROPORTION OF THESE CHEMICALS IS USED TO DILUTE THE ACID CONDITION OF SOIL, TO BE NATURAL CONDITION.

3.3 NPK FERTILIZER (15 : 15 : 15) : NOT LESS THAN 30 GM/M2.

3.4 TACKIFIER OR BINDER MATERIALS (TAKEN FROM PLANTS) : WHITE GLUE OR EMULSION PRODUCED FROM PETROLEUM SHOULD NOT BE USED BECAUSE IT HINDER THE GROWTH OF THE SEEDS. THE TACKIFIER USED SHOULD BE 30 GM/M2.

3.5 WETTING AGENT : USED TO PREVENT THE CLINKING AMONG THE SEEDS AND MAKE THE SEED STICK WITH THE SPRAY AREA, USE WITH SUITABLE PROPORTION.

3.6 INDUSTRIAL DETERGENT : USED TO INCREASE K–VALUE (PERMEABILITY) OF SOIL. THE APPROPRIATE AMOUNT IS 0.1–0.2 GM/M2.

3.7 MULCH MATERIALS : NOT LESS THAN 200 GM/M2.

4. PUMPING MACHINE WITH HIGH PRESSURE THAT CAN SPRAY THE MIXTURES WITH A MINIMUM HEIGHT OF 30 M AND THE PUMPING HEAD CAN SPRAY THE MIXTURES ALL OVER THE PLACE.

5. PERIOD OF TIME :
HYDROSEEDING SHOULD BE DONE 2–4 WEEKS BEFORE RAINY SEASON.

6. FERTILIZING :
10–15 GM/M2 OF UREA FERTILIZER SHOULD BE SPRAYED ON THE AREA ONE MONTH AFTER HYDROSEEDING.

7. 2–3 MONTHS AFTER HYDROSEEDING, 75% OF GRASS SHOULD GROW AND COVER THE GROUND EXCEPT HARD SOIL OR ROCK OR BOULDERS.

8. INVESTIGATION : IF THERE ARE STILL SOME AREAS THAT ARE NOT SUCCESSFULLY DONE ACCORDING TO ITEM 7, THE CONTRACTOR NEEDS TO REDO THE HYDROSEEDING.

9. ANY OTHER OPERATION CONFIRMING TO AGRICULTURAL, TO INCREASE EFFICIENCY OF GROWTH, CAN BE DONE.

REMARK :

1. THIS METHOD OF SLOPE PROTECTION IS SUITABLE ONLY IN SPECIFIC LOCATIONS AND CERTAIN CONDITIONS, IT SHOULD BE APPLIED WITH THE FIRM INFORMATION CONCERNED AND RECOMMENDED BY ENGINEER AND THE GEOLOGIST.
2. THE SLOPE CUT AND FILL SHALL BE STABLE.

REF.	REVISION	SIGNATURE	DATE

KINGDOM OF THAILAND
MINISTRY OF TRANSPORT
DEPARTMENT OF HIGHWAYS

STANDARD DRAWING

SLOPE PROTECTION FOR CUT SLOPE
HYDROSEEDING

DESIGNED : D.O.H. & CONSULTANTS	CHECKED : BUREAU OF LOCATION & DESIGN	DATE : OCT 2015
SUBMITTED : (DIRECTOR OF LOCATION & DESIGN BUREAU)		SCALE : AS SHOWN
APPROVED : (FOR DIRECTOR GENERAL)		DWG NO. SP–204
		SHEET NO. 127

D:\std dwg 2015\SP-204(REV00)

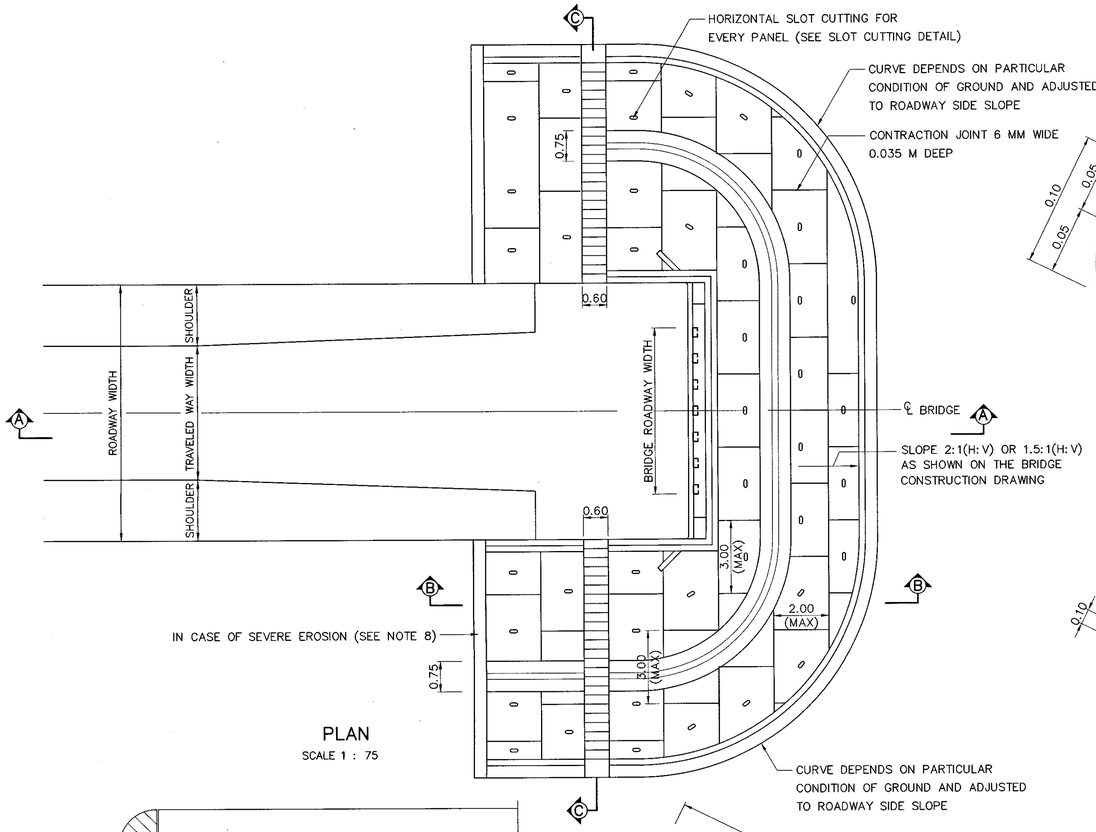

PLAN
SCALE 1 : 75

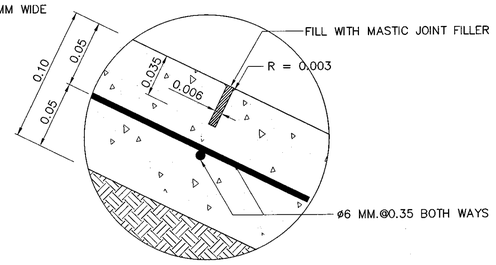

CONTRACTION JOINT DETAILS
SCALE 1 : 2.5

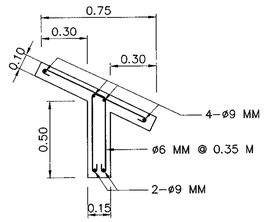

DETAIL "4"
SCALE 1 : 20

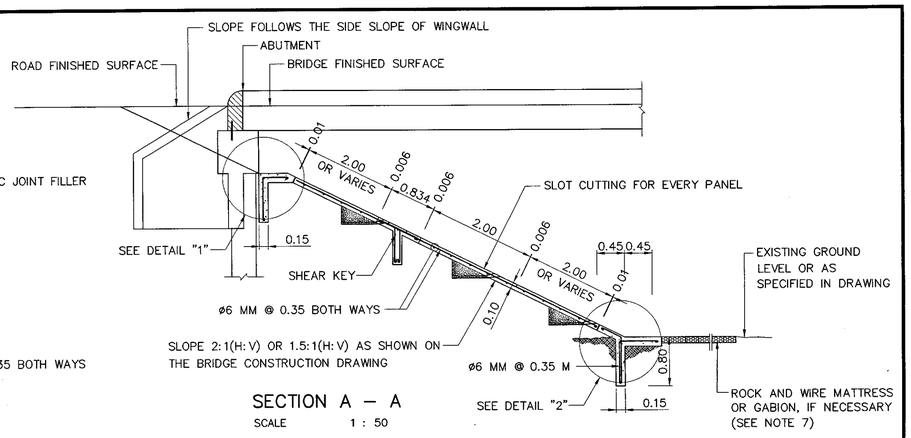

SECTION A – A
SCALE 1 : 50

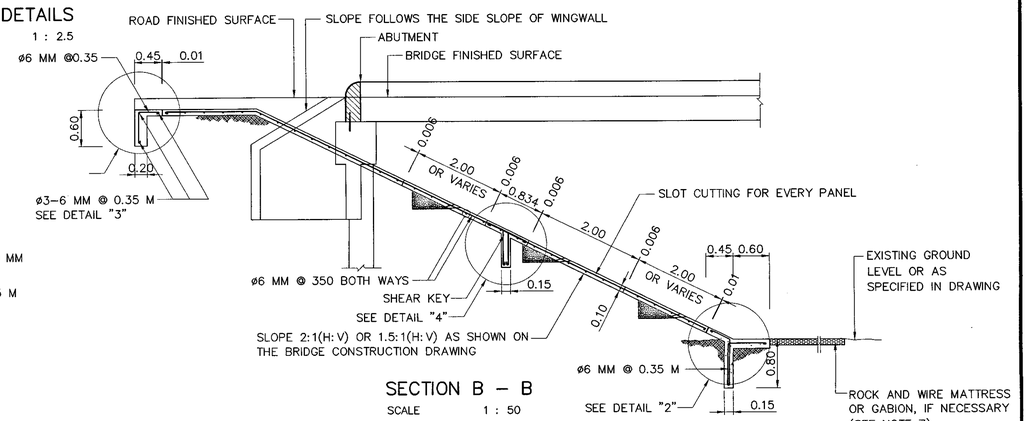

SECTION B – B
SCALE 1 : 50

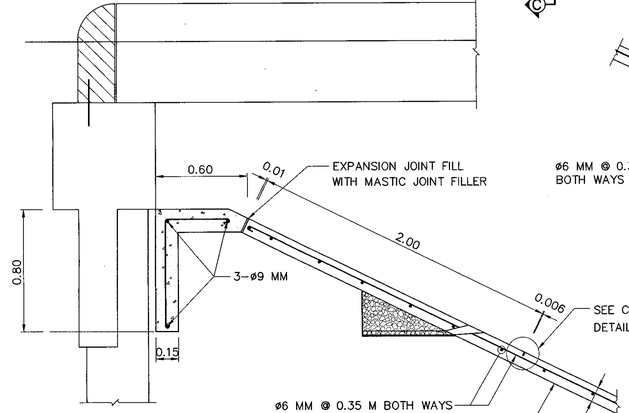

DETAIL "1"
SCALE 1 : 20

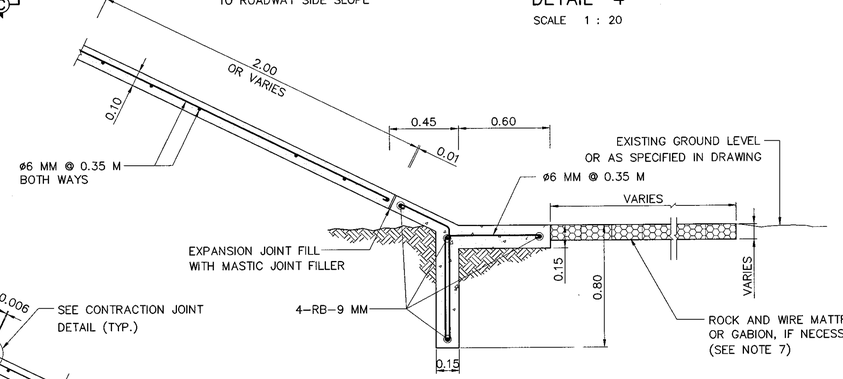

DETAIL "2"
SCALE 1 : 20

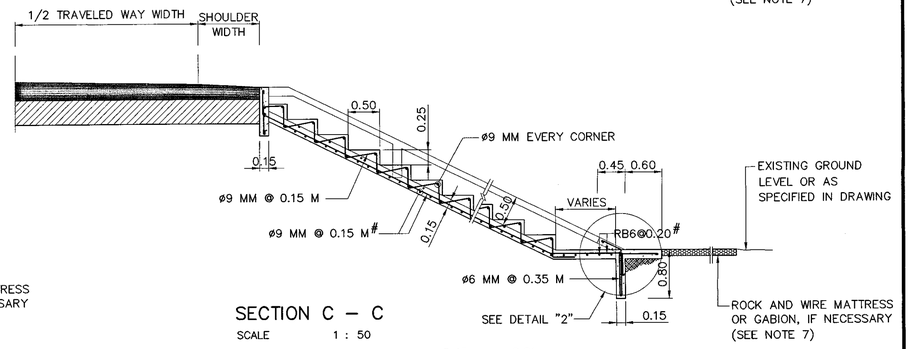

SECTION C – C
SCALE 1 : 50

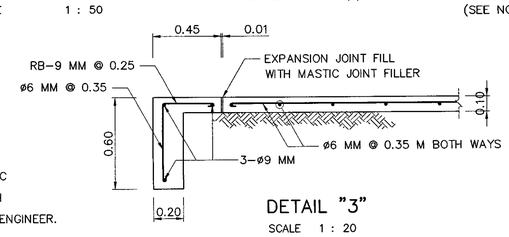

DETAIL "3"
SCALE 1 : 20

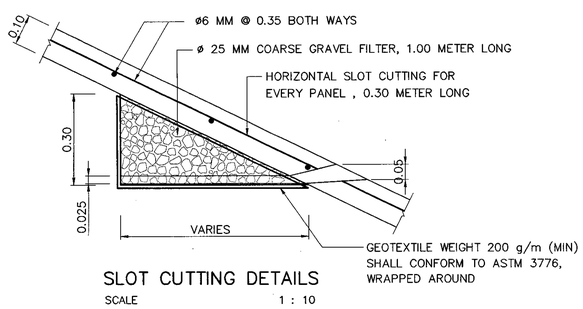

SLOT CUTTING DETAILS
SCALE 1 : 10

NOTES :

1. ALL DIMENSIONS ARE IN METERS UNLESS OTHERWISE INDICATED.
2. BEFORE CONSTRUCTION OF CONCRETE SLOPE PROTECTION , THE EXISTING SLOPE SHALL BE WELL PREPARED AND COMPACTED TO MEET SPECIFICATION AND DETAIL DRAWING.
3. WHERE EXISTING SOIL CONDITION IS POOR OR WHERE THE EMBANKMENT IS HIGH, DESIGN MUST BE SUBMITED TO THE ENGINEER FOR APPROVAL PRIOR TO CONSTRUCTION.
4. THE CONCRETE SLAB SHALL BE 0.10 M THICK.
5. CONCRETE SHALL HAVE A MINIMUM ULTIMATE COMPRESSIVE STRENGTH OF 25 MPa (255 KG/CM^2) FOR 0.15x0.15x0.15 M CUBE AT 28 DAYS.
6. REINFORCING STEEL SHALL CONFORM TO TIS. 20 GRADE SR. 24
7. IN CASE OF SEVERE EROSION, ROCK AND WIRE MATTRESS OR OTHER PROTECTION METHOD AT TOE SHALL BE PROVIDED AT TOE SLOPE.
8. IN CASE OF SEVERE EROSION, AREA AND BOUNDARY OF CONCRETE SLOPE PROTECTION SHALL VARY DEPENDING ON EROSION CONDITION AND AREA OF EROSION.
9. INCASE OF SLOPE HEIGHT > 3.00 M , SHEAR KEY AT MID HEIGHT OF SLOPE SHALL BE REQUIRED.

REMARK :

THIS METHOD OF SLOPE PROTECTION IS SUITABLE ONLY IS SPECIFIC LOCATIONS AND CERTAIN CONDITIONS, IT SHOULD BE APPLIED WITH THE FIRM INFORMATIONS CONCERNED AND RECOMMENDED BY THE ENGINEER.

REF.	REVISION	SIGNATURE	DATE

KINGDOM OF THAILAND
MINISTRY OF TRANSPORT
DEPARTMENT OF HIGHWAYS

STANDARD DRAWING

SLOPE PROTECTION FOR BRIDGE ABUTMENT CONCRETE LINING

DESIGNED : D.O.H. & CONSULTANTS	CHECKED : BUREAU OF LOCATION & DESIGN	DATE : OCT 2015
SUBMITTED : (DIRECTOR OF LOCATION & DESIGN BUREAU)		SCALE : AS SHOWN
APPROVED : (FOR DIRECTOR GENERAL)		DWG NO. SP–301
		SHEET NO. 128

D:\std dwg 2015\SP-301(REV00)

BRIDGE ABUTMENT EROSION PROTECTION

1. OPTION "A" GABION AND MATTRESS

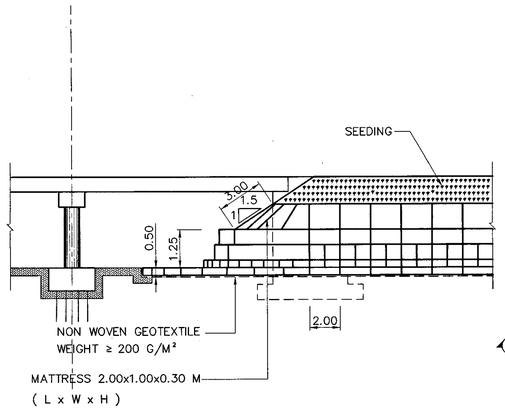

SECTION A–A
SCALE 1 : 200

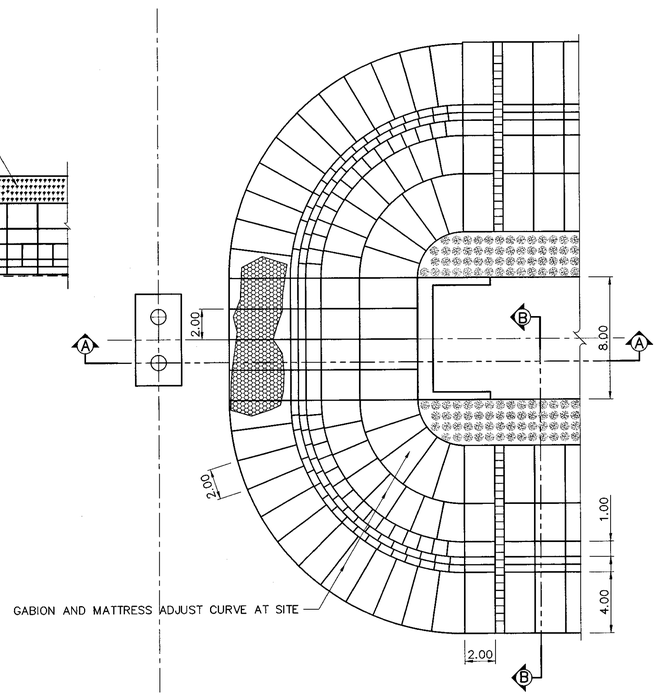

ARRANGEMENT OF GABION AND MATTRESS
(OPTION "A")

1. OPTION "B" MATTRESS

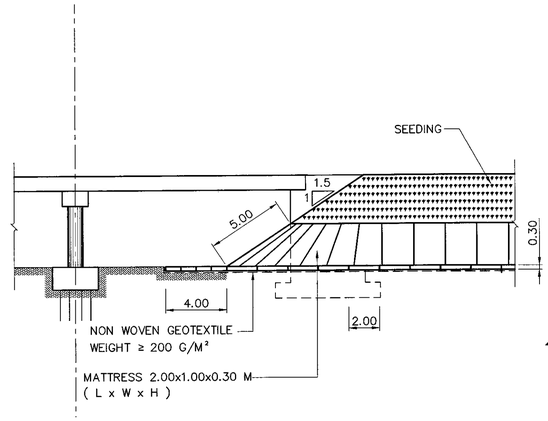

SECTION C–C
SCALE 1 : 200

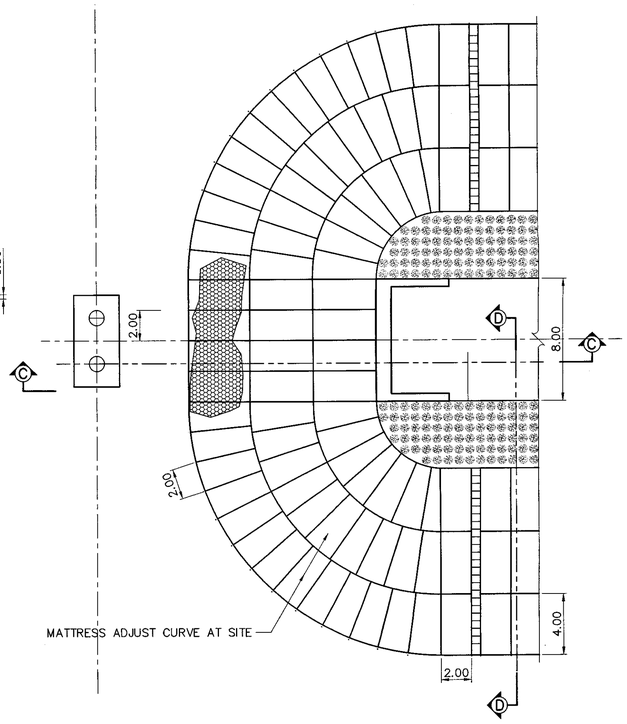

ARRANGEMENT OF MATTRESS
(OPTION "B")

NON WOVEN GEOTEXTILE
(WEIGHT ≥ 200 G/M² WRAP AROUND)
WEIGHT ≥ 200 G/M²

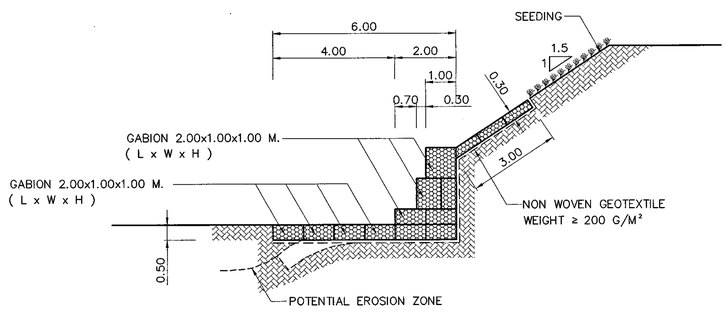

SECTION B–B
SCALE 1 : 10

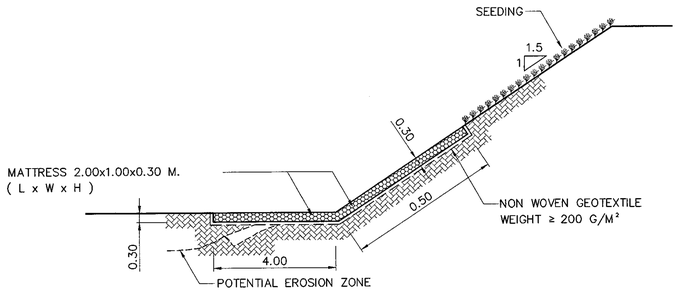

SECTION D–D
SCALE 1 : 10

REMARK:

1. ALL DIMENSION ARE IN METERS UNLESS OTHERWISE INDICATED
2. SUBDRAIN IS USED FOR LOWERING GROUND WATER TABLE TO PREVENT SEEPAGE UNDER ROAD SURFACE, GENERALLY INSTALLED AT TOE OF BACK SLOPE AND BENEATH SIDE DITCH
3. SELECTION OF OPTION "A" AND OPTION "B" DEPENDING ON RIVER FLOW VELOCITY AND DEGREE OF EROSION, OPTION "A" IS STRONGER AND SAFER.
4. THIS DRAWING IS RECOMMENDED FOR BRIDGE LOCATED IN MOUNTAINOUS AREA WHERE IS HIGH ELEVATION, HIGH DEGREE OF EROSION AND LOCAL CONSTRUCTION MATERIALS SUCH AS RIVER GRAVEL ARE AVAILABLE. THE CONSTRUCTION SHOULD BE CARRIED OUT DURING DRY SEASON AND THE ELEVATION OF STRUCTURE SHALL BE HIGHER THAN NORMAL WATER LEVEL.
5. QUANTITY OF GABION IS CALCULATED IN M3
6. QUANTITY OF MATTRESS IS CALCULATED IN M3
7. SEE DRAWING NO. SP–601 TO SP–602 AND SP–104 FOR SPECIFICATION OF GABION AND MATTRESS.

REF.	REVISION	SIGNATURE	DATE

KINGDOM OF THAILAND
MINISTRY OF TRANSPORT
DEPARTMENT OF HIGHWAYS

STANDARD DRAWING

SLOPE PROTECTION FOR BRIDGE ABUTMENT
MATTRESS AND GABION

DESIGNED : D.O.H. & CONSULTANTS	CHECKED : BUREAU OF LOCATION & DESIGN	DATE : OCT 2015
SUBMITTED : (DIRECTOR OF LOCATION & DESIGN BUREAU)		SCALE : AS SHOWN
		DWG NO. SP–302
APPROVED : (FOR DIRECTOR GENERAL)		SHEET NO. 129

D:\std dwg 2015\SP-302(REV00)

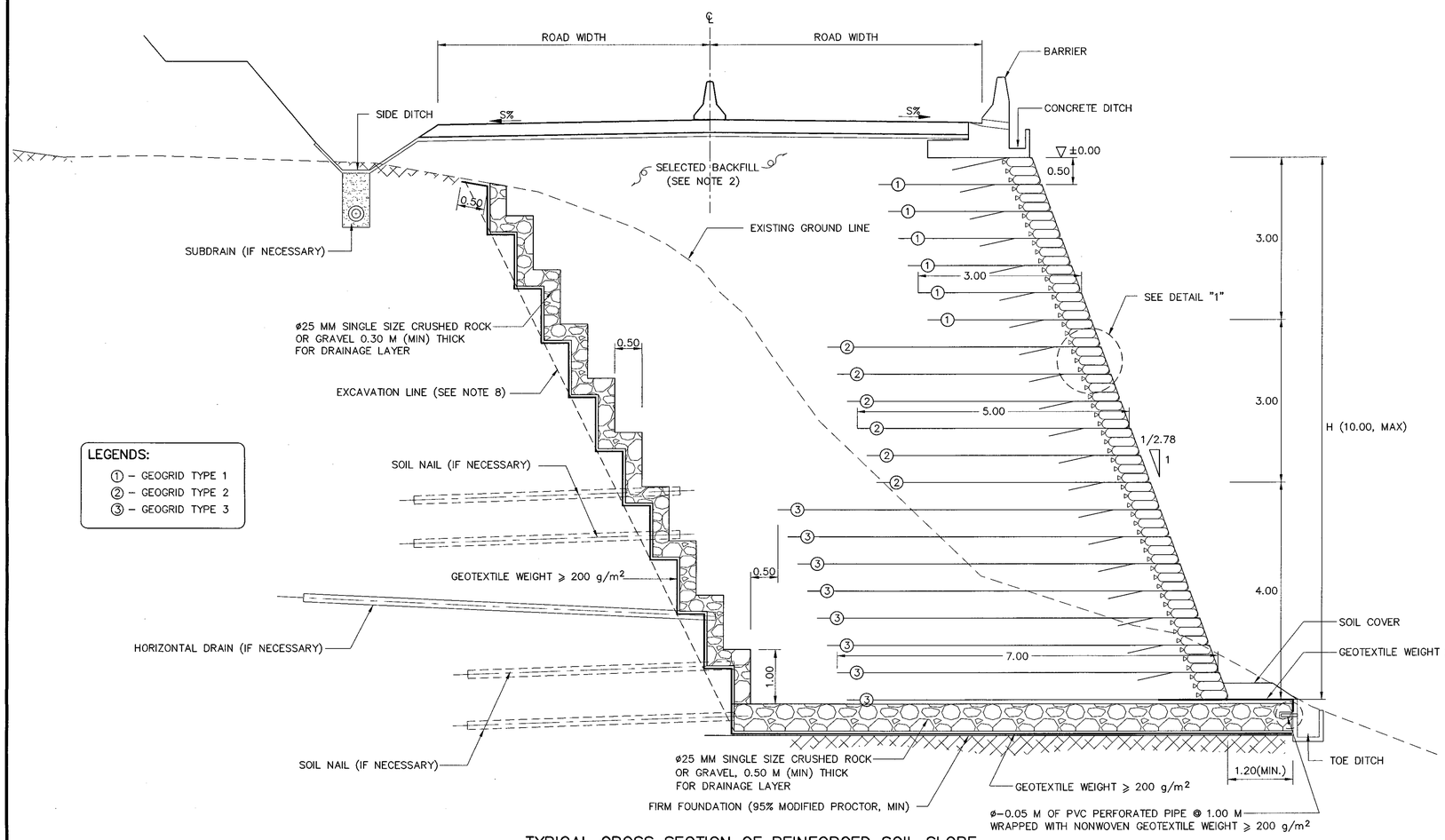

TYPICAL CROSS SECTION OF REINFORCED SOIL SLOPE

SCALE 1:100

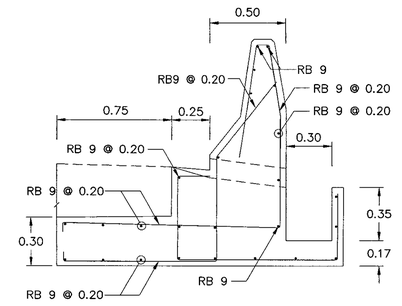

BARRIER AND DITCH REINFORCEMENT DETAIL

SCALE 1:20

NOTES :

1. ALL DIMENSIONS SHOWN ARE IN METERS, UNLESS OTHERWISE INDICATED.
2. SELECTED BACKFILL SHALL CONFORM TO STANDARD NO. DH–S 105/2550.
3. CONCRETE SHALL HAVE A MINIMUM ULTIMATE COMPRESSIVE STRENGTH OF 25 MPa (250 ksc) FOR 0.15x0.15x0.15 M CUBE AT 28 DAYS.
4. REINFORCING STEEL SHALL CONFORM TO TIS. 20 GRADE SR. 24.
5. SOIL BORING INVESTIGATION SHALL BE CONDUCTED APPROXIMATELY AT 200 M INTERVAL. IN CASE OF COMPLEX GEOLOGICAL CONDITION, ADDITIONAL BOREHOLE SHALL BE REQUIRED AS DIRECTED BY THE ENGINEER.
6. PLATE LOAD TEST (ASTM 1194–94) SHALL BE CARRIED OUT TO CONFIRM BEARING CAPACITY OF FOUNDATION SOIL. FACTOR OF SAFETY OF AT LEAST 3.0 SHALL BE USED.
7. CONTRACTOR SHALL SUBMIT COMPLETE DESIGN COMPECTATIONS, SOIL INVESTIGATION REPORT AND SHOP DRAWING TO ENGINEER FOR APPROVAL BEFORE BEGINNING OF THE CONSTRUCTION.
8. IN CASE THE RESULTS OF STABILITY ANALYSIS SHOW THAT THE FACTOR OF SAFETY IS NOT SUFFICIENT, THE CONTRACTOR SHALL INFORM THE ENGINEER AND PROPOSE METHOD TO STABILIZE CUT SLOPE TO THE ENGINEER FOR APPROVAL BEFORE BEGINNING OF THE CONSTRUCTION.
9. SOIL BENCHING AS SHOWN IN THE DRAWING IS RECOMMENDED IN ORDER TO IMPROVE FRICTION AT THE INTERFACE BETWEEN THE NEWLY COMPACTED SOIL AND THE EXISTING SOIL. HOWEVER, IF THE SETBACK DISTANCE APPEARS TO BE TOO LARGE AND CAUSES SERIOUS INTERRUPTION TO THE TRAFFIC, 60–DEGREE SLOPE CUT MAY BE USED WITH APPROVAL OF ENGINEER.
10. THE CONTRACTOR MAY PROPOSE TO USE DRAINAGE CELL AS DRAINAGE LAYER INSTEAD OF USING CRUSHED ROCK OR GRAVEL DRAINAGE LAYER. THE CONTRACTOR SHALL PROPOSE THE SPECIFICATION OF DRAINAGE CELL TO THE ENGINEER FOR APPROVAL.

TABLE 1 GENERAL ARRANGEMENT OF GEOGRID REINFORCEMENT LENGTH AND GEOGRID TYPE OF EACH LAYER

WALL HEIGHT, H (M)	GEOGRID REINFORCEMENT LENGTH IN MACHINE DIRECTION , L(M)/GEOGRID TYPE AT SPECIFIED ELEVATION (FROM ±0.00)																				ALLOWABLE BEARING CAPACITY (MIN) (KN/M²)
	0.50	1.00	1.50	2.00	2.50	3.00	3.50	4.00	4.50	5.00	5.50	6.00	6.50	7.00	7.50	8.00	8.50	9.00	9.50	10.00	
2.00	3.00/TYPE 1	3.00/TYPE 1	3.00/TYPE 1	3.00/TYPE 1	–	–	–	–	–	–	–	–	–	–	–	–	–	–	–	–	70
3.00	3.00/TYPE 1	3.00/TYPE 1	3.00/TYPE 1	3.00/TYPE 1	3.00/TYPE 1	3.00/TYPE 1	–	–	–	–	–	–	–	–	–	–	–	–	–	–	90
4.00	3.00/TYPE 1	3.00/TYPE 1	3.00/TYPE 1	3.00/TYPE 1	3.00/TYPE 1	3.00/TYPE 1	5.00/TYPE 2	5.00/TYPE 2	–	–	–	–	–	–	–	–	–	–	–	–	105
5.00	3.00/TYPE 1	3.00/TYPE 1	3.00/TYPE 1	3.00/TYPE 1	3.00/TYPE 1	3.00/TYPE 1	5.00/TYPE 2	5.00/TYPE 2	5.00/TYPE 2	5.00/TYPE 2	–	–	–	–	–	–	–	–	–	–	125
6.00	3.00/TYPE 1	3.00/TYPE 1	3.00/TYPE 1	3.00/TYPE 1	3.00/TYPE 1	3.00/TYPE 1	5.00/TYPE 2	5.00/TYPE 2	5.00/TYPE 2	5.00/TYPE 2	5.00/TYPE 2	5.00/TYPE 2	–	–	–	–	–	–	–	–	145
7.00	3.00/TYPE 1	3.00/TYPE 1	3.00/TYPE 1	3.00/TYPE 1	3.00/TYPE 1	3.00/TYPE 1	5.00/TYPE 2	5.00/TYPE 2	5.00/TYPE 2	5.00/TYPE 2	5.00/TYPE 2	5.00/TYPE 2	7.00/TYPE 3	7.00/TYPE 3	–	–	–	–	–	–	160
8.00	3.00/TYPE 1	3.00/TYPE 1	3.00/TYPE 1	3.00/TYPE 1	3.00/TYPE 1	3.00/TYPE 1	5.00/TYPE 2	5.00/TYPE 2	5.00/TYPE 2	5.00/TYPE 2	5.00/TYPE 2	5.00/TYPE 2	7.00/TYPE 3	7.00/TYPE 3	7.00/TYPE 3	7.00/TYPE 3	–	–	–	–	180
9.00	3.00/TYPE 1	3.00/TYPE 1	3.00/TYPE 1	3.00/TYPE 1	3.00/TYPE 1	3.00/TYPE 1	5.00/TYPE 2	5.00/TYPE 2	5.00/TYPE 2	5.00/TYPE 2	5.00/TYPE 2	5.00/TYPE 2	7.00/TYPE 3	7.00/TYPE 3	7.00/TYPE 3	7.00/TYPE 3	7.00/TYPE 3	7.00/TYPE 3	–	–	200
10.00	3.00/TYPE 1	3.00/TYPE 1	3.00/TYPE 1	3.00/TYPE 1	3.00/TYPE 1	3.00/TYPE 1	5.00/TYPE 2	5.00/TYPE 2	5.00/TYPE 2	5.00/TYPE 2	5.00/TYPE 2	5.00/TYPE 2	7.00/TYPE 3	7.00/TYPE 3	7.00/TYPE 3	7.00/TYPE 3	7.00/TYPE 3	7.00/TYPE 3	7.00/TYPE 3	7.00/TYPE 3	215

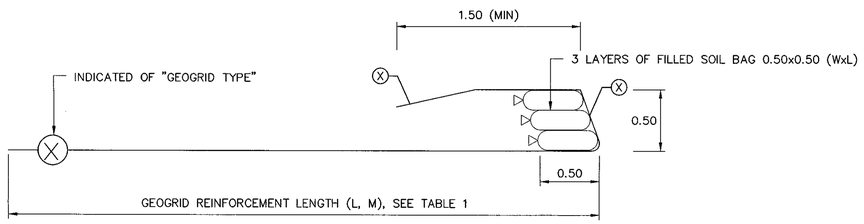

DETAIL "1"

DETAIL OF GEOGRID AND SOIL BAGS INSTALLATION OF EACH LAYER

NOT TO SCALE

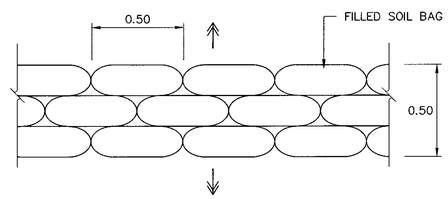

ARRANGEMENT OF SOIL BAGS (SIDE VIEW)

NOT TO SCALE

REF.	REVISION	SIGNATURE	DATE

KINGDOM OF THAILAND

MINISTRY OF TRANSPORT

DEPARTMENT OF HIGHWAYS

STANDARD DRAWING

REINFORCED SOIL SLOPE

TYPICAL CROSS SECTION

DESIGNED : D.O.H. & CONSULTANTS	CHECKED : BUREAU OF LOCATION & DESIGN	DATE : OCT 2015
SUBMITTED : (DIRECTOR OF LOCATION & DESIGN BUREAU)		SCALE : AS SHOWN
APPROVED : (FOR DIRECTOR GENERAL)		DWG NO. SP–401
		SHEET NO. 130

D:\std dwg 2015\SP-401(REV00)

MATERIAL SPECIFICATIONS FOR REINFORCED SOIL SLOPE USING GEOGRID

1. GEOGRID REINFORCEMENT MATERIAL

1.1 THE SPECIFIC GEOGRID REINFORCEMENT MATERIAL AND SUPPLIER SHALL BE PREAPPROVED BY THE AGENCY AS OUTLINED IN THE AGENCY'S REINFORCED SLOPE POLICY.

1.2 THE GEOGRID REINFORCEMENT SHALL BE A REGULAR NETWORK OF INTEGRALLY CONNECTED POLYMER TENSILE ELEMENTS WITH APERTURE GEOMETRY SUFFICIENT TO PERMIT SIGNIFICANT MECHANICAL INTERLOCK WITH THE SURROUNDING SOIL OR ROCK. THE GEOGRID REINFORCEMENT STRUCTURE SHALL BE DIMENSIONALLY STABLE AND ABLE TO RETAIN ITS GEOMETRY UNDER CONSTRUCTION STRESSES AND SHALL HAVE HIGH RESISTANCE TO DAMAGE DURING CONSTRUCTION, TO ULTRAVIOLET DEGRADATION, AND TO ALL FORMS OF CHEMICAL AND BIOLOGICAL DEGRADATION ENCOUNTERED IN THE SOIL BEING REINFORCED.

1.3 GEOGRID SHALL MADE FROM HIGH MOLECULAR WEIGHT, HIGH TENACITY POLYESTER MULTIFILAMENT YARNS. THE YARNS ARE WOVEN ON TENSION IN MACHINE DIRECTION AND FINISHED WITH A POLYMERIC COATING.

1.4 THE GEOGRID SHALL HAVE PHYSICAL AND ENGINEERING PROPERTIES AS LISTED IN TABLE 1

1.5 CERTIFICATION: THE CONTRACTOR SHALL SUBMIT A MANUFACTURER'S CERTIFICATION THAT THE GEOGRID SUPPLIED MEET THE RESPECTIVE INDEX CRITERIA SET WHEN GEOSYNTHETIC WAS APPROVED BY THE AGENCY, MEASURED IN FULL ACCORDANCE WITH ALL TEST METHODS AND STANDARDS SPECIFIED. IN CASE OF DISPUTE OVER VALIDITY OF VALUES, THE ENGINEER CAN REQUIRE THE CONTRACTOR TO SUPPLY TEST DATA FROM AGENCY–APPROVED LABORATORY TO SUPPORT THE CERTIFIED VALUES SUBMITTED.

1.6 GEOGRID REDUCTION FACTOR (RF) FOR CALCULATION OF LONG TERM DESIGN STRENGTH ACCORDING TO FHWA NHI–00–043 OR BS 8006 SHALL NOT BE MORE THAN OR EQUAL TO THE VALUES AS BELOW;

1.6.1 REDUCTION FACTOR FOR CREEP : 1.50

1.6.2 REDUCTION FACTOR FOR INSTALLATION DAMAGE: 1.12 FOR FINE MATERIAL AND 1.25 FOR COARSE MATERIAL

1.6.3 REDUCTION FACTOR FOR DURABILITY (ENVIRONMENTAL EFFECT) : 1.15

1.7 DOCUMENTS FOR PRODUCT APPROVAL: THE CONTRACTOR SHALL SUBMIT THE DOCUMENTS REGARDING TO THE GEOGRID THAT WILL BE USED IN THE PROJECT TO THE DESIGNER OR THE OWNER'S REPRESENTATIVE FOR APPROVAL. THESE DOCUMENTS SHALL BE SUBMITTED AT LEAST 45 DAYS BEFORE STARTING THE WORK. THE DETAILS OF DOCUMENTS FOR PRODUCT APPROVAL ARE AS BELOW;

1.7.1 COPY OF MANUFACTURER'S ISO 9001 CERTIFICATION.

1.7.2 COPY OF OFFICIAL DISTRIBUTOR LETTER FROM MANUFACTURER.

1.7.3 TECHNICAL DATA SHEET OF THE PRODUCT WHICH HAS MANUFACTURER'S NAME AND ADDRESS.

1.7.4 PRODUCT SAMPLE (1 PIECE PER 1 APPROVAL DOCUMENT)

1.7.5 TEST REPORT OF THE PRODUCT MATERIAL. THE TEST SHALL BE CONDUCTED BY DOH OR RELIABLE INSTITUTE'S LABORATORY. THE DETAIL OF THE TEST FOR GEOGRID SHALL BE AS BELOW;

1.7.5.1 TENSILE STRENGTH AND ELONGATION AT BREAK FOR BOTH MACHINE AND CROSS MACHINE DIRECTIONS (ASTM D 6637 OR ISO 10319)

1.7.5.2 TENSILE STRENGTH AT 2% AND 5% STRAIN FOR BOTH MACHINE AND CROSS MACHINE DIRECTIONS (ASTM D 6637OR ISO 10319)

1.7.5.3 MASS PER UNIT AREA (ASTM D 5261)

1.7.6 COPY OF CREEP TEST REPORT FROM RELIABLE INSTITUTE'S LABORATORY FOR CONFIRMATION OF CREEP REDUCTION FACTOR USED. THE CREEP TEST MUST BE PERFORMED ON AT LEAST ONE (1) TYPE OF GEOGRID TO REPRESENT THE OVERALL CREEP PROPERTY FOR EACH GEOGRID MANUFACTURER. NO NEED TO SUBMIT CREEP TEST REPORT FOR EVERY TYPE OF GEOGRID USED.

2. CONSTRUCTION

2.1 DELIVERY, STORAGE, AND HANDLING: FOLLOW REQUIREMENTS SET UNDER MATERIAL SPECIFICATIONS FOR GEOGRID REINFORCEMENT.

2.2 ON–SITE REPRESENTATIVE: GEOGRID REINFORCEMENT MATERIAL SUPPLIERS SHALL PROVIDE A QUALIFIED AND EXPERIENCED REPRESENTATIVE ON SITE, FOR A MINIMUM OF THREE DAYS, TO ASSIST THE CONTRACTOR AND AGENCY INSPECTORS AT THE START OF CONSTRUCTION. IF THERE IS MORE THAN ONE SLOPE ON A PROJECT, THEN THIS CRITERIA WILL APPLY TO CONSTRUCTION OF THE INITIAL SLOPE ONLY. THE REPRESENTATIVE SHALL ALSO BE AVAILABLE ON AN AS–NEEDED BASIS, AS REQUESTED BY THE AGENCY ENGINEER, DURING CONSTRUCTION OF THE REMAINING SLOPE(S).

2.3 SITE EXCAVATION: ALL AREAS IMMEDIATELY BENEATH THE INSTALLATION AREA FOR THE GEOGRID REINFORCEMENT SHALL BE PROPERLY PREPARED AS DETAILED ON THE PLANS, SPECIFIED ELSEWHERE WITHIN THE SPECIFICATIONS, OR DIRECTED BY THE ENGINEER. SUBGRADE SURFACE SHALL BE LEVEL, FREE FROM DELETERIOUS MATERIALS, LOOSE, OR OTHERWISE UNSUITABLE SOILS. PRIOR TO PLACEMENT OF GEOGRID REINFORCEMENT, SUBGRADE SHALL BE PROOFROLLED TO PROVIDE A UNIFORM AND FIRM SURFACE. ANY SOFT AREAS, AS DETERMINED BY THE OWNER'S ENGINEER, SHALL BE EXCAVATED AND REPLACED WITH SUITABLE COMPACTED SOILS. FOUNDATION SURFACE SHALL BE INSPECTED AND APPROVED BY THE OWNER'S GEOTECHNICAL ENGINEER PRIOR TO FILL PLACEMENT. BENCHING THE BACKCUT INTO COMPETENT SOIL IS RECOMMENDED TO IMPROVE STABILITY.

2.4 GEOGRID PLACEMENT: THE GEOGRID REINFORCEMENT SHALL BE INSTALLED IN ACCORDANCE WITH THE MANUFACTURER'S RECOMMENDATIONS. THE GEOGRID REINFORCEMENT SHALL BE PLACED WITHIN THE LAYERS OF COMPACTED SOIL AS SHOWN ON PLANS OR AS DIRECTED.

THE GEOGRID REINFORCEMENT SHALL BE PLACED IN CONTINUOUS, LONGITUDINAL STRIPS IN THE DIRECTION OF MAIN REINFORCEMENT. HOWEVER, IF THE CONTRACTOR IS UNABLE TO COMPLETE A REQUIRED LENGTH WITH A SINGLE CONTINUOUS LENGTH OF GEOGRID, A JOINT MAY BE MADE WITH THE ENGINEER'S APPROVAL. ONLY ONE JOINT PER LENGTH OF GEOGRID SHALL BE ALLOWED. THIS JOINT SHALL BE MADE FOR THE FULL WIDTH OF THE STRIP BY USING A SIMILAR MATERIAL WITH SIMILAR STRENGTH. JOINTS IN GEOGRID REINFORCEMENT SHALL BE PULLED AND HELD TAUT DURING FILL PLACEMENT. JOINTS SHALL NOT BE USED WITH GEOTEXTILES.

ADJACENT STRIPS, IN THE CASE OF 100% COVERAGE IN PLAN VIEW, NEED NOT BE OVERLAPPED. THE MINIMUM HORIZONTAL COVERAGE IS 50%, WITH HORIZONTAL SPACINGS BETWEEN REINFORCEMENT NO GREATER THAN 1.00 M. HORIZONTAL COVERAGE OF LESS THAN 100% SHALL NOT BE ALLOWED UNLESS SPECIFICALLY DETAILED IN THE CONSTRUCTION DRAWINGS. ADJACENT ROLLS OF GEOGRID REINFORCEMENT SHALL BE OVERLAPPED OR MECHANICALLY CONNECTED WHERE EXPOSED IN A WRAP–AROUND FACE SYSTEM, AS APPLICABLE.

PLACE ONLY THAT AMOUNT OF GEOGRID REINFORCEMENT REQUIRED FOR IMMEDIATELY PENDING WORK TO PREVENT UNDUE DAMAGE. AFTER A LAYER OF GEOGRID REINFORCEMENT HAS BEEN PLACED, THE NEXT SUCCEEDING LAYER OF SOIL SHALL BE PLACED AND COMPACTED AS APPROPRIATE. AFTER THE SPECIFIED SOIL LAYER HAS BEEN PLACED, THE NEXT GEOGRID REINFORCEMENT LAYER SHALL BE INSTALLED. THE PROCESS SHALL BE REPEATED FOR EACH SUBSEQUENT LAYER OF GEOGRID REINFORCEMENT AND SOIL.

GEOGRID REINFORCEMENT SHALL BE PLACED TO LAY FLAT AND PULLED TIGHT PRIOR TO BACKFILLING. AFTER A LAYER OF GEOGRID REINFORCEMENT HAS BEEN PLACED, SUITABLE MEANS, SUCH AS PINS OR SMALL PILES OF SOIL, SHALL BE USED TO HOLD THE GEOGRID REINFORCEMENT IN POSITION UNTIL THE SUBSEQUENT SOIL LAYER CAN BE PLACED. UNDER NO CIRCUMSTANCES SHALL A TRACK–TYPE VEHICLE BE ALLOWED ON THE GEOGRID REINFORCEMENT BEFORE AT LEAST 150 MM OF SOIL HAS BEEN PLACED.

DURING CONSTRUCTION, THE SURFACE OF THE FILL SHOULD BE KEPT APPROXIMATELY HORIZONTAL. GEOGRID REINFORCEMENT SHALL BE PLACED DIRECTLY ON THE COMPACTED HORIZONTAL FILL SURFACE. GEOGRID REINFORCEMENTS ARE TO BE PLACED WITHIN 0.075 M OF THE DESIGN ELEVATIONS AND EXTEND THE LENGTH AS SHOWN ON THE ELEVATION VIEW, UNLESS OTHERWISE DIRECTED BY OWNER'S ENGINEER. CORRECT ORIENTATION OF THE GEOGRID REINFORCEMENT SHALL BE VERIFIED BY THE CONTRACTOR.

2.5 FILL PLACEMENT: FILL SHALL BE COMPACTED AS SPECIFIED BY PROJECT SPECIFICATIONS OR TO AT LEAST 95 PERCENT OF THE MAXIMUM DENSITY DETERMINED IN ACCORDANCE WITH AASHTO T–99, WHICHEVER IS GREATER. DENSITY TESTING SHALL BE MADE EVERY 1,000 CUBIC METERS OF SOIL PLACEMENT OR AS OTHERWISE SPECIFIED BY OWNER'S ENGINEER OR CONTACT DOCUMENTS.
BACKFILL SHALL BE PLACED, SPREAD, AND COMPACTED IN SUCH A MANNER TO MINIMIZE THE DEVELOPMENT OF WRINKLES AND/OR DISPLACEMENT OF THE GEOGRID REINFORCEMENT.
FILL SHALL BE PLACED IN 0.30 M MAXIMUM LIFT THICKNESS WHERE HEAVY COMPACTION EQUIPMENT IS TO BE USED, AND 0.150 M MAXIMUM UNCOMPACTED LIFT THICKNESS WHERE HAND OPERATED EQUIPMENT IS USED.
BACKFILL SHALL BE GRADED AWAY FROM THE SLOPE CREST AND ROLLED AT THE END OF EACH WORKDAY TO PREVENT PONDING OF WATER ON THE SURFACE OF THE REINFORCE SOIL MASS.
TRACKED CONSTRUCTION EQUIPMENT SHALL NOT BE OPERATED DIRECTLY UPON THE GEOGRID REINFORCEMENT. A MINIMUM FILL THICKNESS OF 150 MM IS REQUIRED PRIOR TO OPERATION OF TRACKED VEHICLES OVER THE GEOGRID REINFORCEMENT. TURNING IF TRACKED VEHICLES SHOULD BE KEPT TO MINIMUM TO PREVENT TRACKS FROM DISPLACING THE FILL AND GEOGRID REINFORCEMENT.
IF RECOMMENDED BY THE GEOGRID MANUFACTURER AND APPROVED BY ENGINEER, RUBBER–TIRED EQUIPMENT MAY PASS OVER THE GEOGRID REINFORCEMENT AT SLOW SPEEDS, LESS THAN 15 KM/HOUR. SUDDEN BRAKING AND SHARP TURNING SHALL BE AVOIDED.

2.6 FINAL SLOPE GEOMETRY VERIFICATION: CONTRACTOR SHALL CONFIRM THAT AS–BUILT SLOPE GEOMETRIES CONFORM TO APPROXIMATE GEOMETRIES SHOWN ON CONSTRUCTION DRAWINGS.

3. METHOD OF MEASUREMENT

MEASUREMENT OF GEOGRID REINFORCEMENT IS ON A SQUARE–METER BASIS AND IS COMPUTED ON THE TOTAL AREA OF GEOGRID REINFORCEMENT SHOWN ON THE CONSTRUCTION DRAWINGS, EXCLUSIVE OF THE AREA OF GEOGRID USED IN ANY OVERLAPS. OVERLAPS ARE AN INCIDENTAL ITEM.

4. BASE OF PAYMENT

THE ACCEPTED QUANTITIES OF GEOGRID REINFORCEMENT BY TYPE WILL BE PAID FOR PER SQUARE–METER IN PLACE.

TABLE 1 PHYSICAL AND ENGINEERING PROPERTIES OF GEOGRID REINFORCEMENT

PROPERTIES	TEST METHOD (S)	UNIT	TYPICAL VALUE		
			TYPE 1	TYPE 2	TYPE 3
RAW MATERIAL	–	–	POLYESTER (PET)		
GEOGRID COATING TYPE	–	–	POLYMER OR PVC		
TENSILE STRENGTH AT BREAK (MD*/CD**)	ASTM D 6637 OR ISO10319	kN/m	≥60/30	≥80/30	≥150/30
ELONGATION AT BREAK (MD)	ASTM D 6637 OR ISO10319	%	≤11	≤11	≤12
TENSILE STRENGTH AT 2% STRAIN (MD)	ASTM D 6637 OR ISO10319	kN/m	≥ 12	≥ 16	≥ 32
TENSILE STRENGTH AT 5% STRAIN (MD)	ASTM D 6637 OR ISO10319	kN/m	≥ 30	≥ 40	≥ 75
REDUCTION FACTOR FOR CREEP (MORE THAN OR EQUAL 114 YEARS)	ASTM D 5262 OR ISO13431	–	≤1.50	≤1.50	≤1.50
LONG TERM DESIGN STRENGTH (MORE THAN OR EQUAL 114 YEARS), MD	FHWA NHI–00–043 OR BS 8006	kN/m	≥ 30	≥ 40	≥ 80
MASS PER UNIT AREA	ASTM D 5261 OR ISO 9864	g/sq.m	≥260	≥ 300	≥ 530
REMARKS: *MD – MACHINE DIRECTION; **CD – CROSS MACHINE DIRECTION					

5. NONWOVEN GEOTEXTILE MATERIAL

5.1 THE SPECIFIC NONWOVEN GEOTEXTILE MATERIAL AND SUPPLIER SHALL BE PREAPPROVED BY THE AGENCY AS OUTLINED IN THE AGENCY'S REINFORCED SLOPE POLICY.

5.2 NONWOVEN GEOTEXTILE WILL BE USED FOR FILTRATION AND SEPARATION BETWEEN DRAINAGE GRAVEL AND SELECTED BACKFILL/EXISTING SOIL. THIS GEOTEXTILE SHALL BE MECHANICALLY NONWOVENS FROM ULTRAVIOLET STABILIZED POLYESTER (PET) OR POLYPROPYLENE (PP) USING NEEDLE PUNCHED PROCESS.

5.3 THE PHYSICAL AND ENGINEERING PROPERTIES OF NONWOVEN GEOTEXTILE SHALL BE SPECIFIED AS INDICATED IN THE TABLE 2.

5.4 THE NONWOVEN GEOTEXTILE SHALL HAVE ISO 9001 CERTIFICATION OF THE MANUFACTURING.

5.5 THE PROPERTIES OF GEOTEXTILE (AS ABOVE) SHALL BE TESTED BY RELIABLE THIRD PARTY LABORATORY. THE RESULT OF TESTING SHALL BE SUBMITTED WITH THE MANUFACTURER OFFICIAL TECHNICAL DATA SHEET.

5.6 THE GEOTEXTILE SHALL BE INSTALLATION ACCORDING TO THE CONSTRUCTION DRAWING. THE CONNECTION BETWEEN ROLLS OF GEOTEXTILE IS DONE BY THE MEAN OF SEAMING OR OVERLAPPING. THE LENGTH OF OVERLAPPING SHALL BE AT LEAST 0.30 M FOR NORMAL CONDITION, 0.50 M FOR SOFT SOIL AND AT LEAST 1.00 M FOR UNDER WATER. FOR SEAMING METHOD, THE GEOTEXTILE SHALL BE OVERLAPPED AT LEAST 150MM BEFORE SEAMING.

5.7 DOCUMENTS FOR PRODUCT APPROVAL: THE CONTRACTOR SHALL SUBMIT THE DOCUMENTS REGARDING TO THE NONWOVEN GEOTEXTILE THAT WILL BE USED IN THE PROJECT TO THE DESIGNER OR THE OWNER'S REPRESENTATIVE FOR APPROVAL. THESE DOCUMENTS SHALL BE SUBMITTED AT LEAST 45 DAYS BEFORE STARTING THE WORK. THE DETAIL OF DOCUMENTS FOR PRODUCT APPROVAL ARE AS BELOW ;

5.7.1 COPY OF MANUFACTURER'S ISO 9001 CERTIFICATION.

5.7.2 TECHNICAL DATA SHEET OF THE PRODUCT WHICH HAS MANUFACTURER'S NAME AND ADDRESS.

5.7.3 PRODUCT SAMPLE (1 PIECE PER 1 APPROVAL DOCUMENT)

5.7.4 TEST REPORT OF THE PRODUCT MATERIAL. THE TEST SHALL BE CONDUCTED BY DOH OR RELIABLE INSTITUTE'S LABORATORY. THE DETAIL OF THE TEST SHALL BE ACCORDING TO THE TABLE 2

TABLE 2 PHYSICAL AND ENGINEERING PROPERTIES OF NONWOVEN GEOTEXTILE

PROPERTIES	TEST METHOD (S)	UNIT	TYPICAL VALUE
RAW MATERIAL	–	–	POLYESTER (PET) OR POLYPROPYLENE (PP)
MANUFACTURING PROCESS	–	–	NEEDLE PUNCHED
TENSILE STRENGTH AT BREAK (AVG.)	ASTM D 4595 OR ISO 10319	kN/m	≥ 11
ELONGATION AT BREAK (AVG.)	ASTM D 4595 OR ISO 10319	%	≥ 50
MASS PER UNIT AREA	ASTM D 5261 OR ISO 9864	g/sq.m	≥ 200
CBR PUNCTURE	ASTM D 6241 OR ISO 12236	N	≥ 2,000
APPARENT OPENING SIZE, AOS (095)	ASTM D 4751 OR ISO 12956	mm	≤ 0.21
FLOW RATE (100 MM, HEAD)	ASTM D 4491 OR ISO 11058	l/sq.m–sec	≥ 100

REF.	REVISION	SIGNATURE	DATE

KINGDOM OF THAILAND
MINISTRY OF TRANSPORT
DEPARTMENT OF HIGHWAYS

STANDARD DRAWING
REINFORCED SOIL SLOPE
MATERIAL SPECIFICATIONS

DESIGNED : D.O.H. & CONSULTANTS
CHECKED : BUREAU OF LOCATION & DESIGN
DATE : OCT 2015
SUBMITTED : (DIRECTOR OF LOCATION & DESIGN BUREAU)
SCALE : AS SHOWN
APPROVED : (FOR DIRECTOR GENERAL)
DWG NO. SP–402
SHEET NO. 131

D:\std dwg 2015\SP–402(REV00)

OBJECTIVES:

1) REINFORCING MATERIAL
2) REINFORCED BACKFILL
3) FACING

THESE STANDARD DRAWINGS DESIGNED TO GIVE THE USER UNDERSTANDING WITH MECHANICALLY STABILIZED EARTH WALL (MSE WALL) AND THE USER CAN BE APPLIED TO THE DESIGN AND COST ESTIMATE.

SUBMITTAL:

THESE STANDARD DRAWINGS SHALL BE USED ONLY AS THE GUILELINE FOR THE DESIGN OF MSE WALL. THE CONTRACTOR WHO WILL CONSTRUCT THE MSE WALL SYSTEM SHALL SUBMIT COMPLETE DESIGN COMPUTATIONS AND SHOP DRAWINGS TO ENGINEER FOR REVIEW AND APPROVAL BEFORE BEGINNING OF THE CONSTRUCTION OF THE MSE WALL SYSTEM. THE SUBMITTED SHOP DRAWING SHALL INCLUDE AT LEAST THE FOLLOWING:

1) PLAN DRAWING FOR EACH WALL.
2) TYPICAL CROSS SECTION DRAWING FOR EACH WALL.
3) CONNECTION DETAILS AND DIMENSIONS BETWEEN CONCRETE PANELS, EMBEDDED DEVICES, AND SOIL REINFORCEMENT.
4) DETAILS FOR OTHER CIVIL WORK CONSTRUCTION AND DRAINAGE SYSTEM.
5) DETAILS OF ARCHITECTURE/LANDSLIDE ARCHITECTURE.
6) DESIGN REPORT AND DETAILS OF TRAFFIC MANAGEMENT DURING CONSTRUCTION PERIOD.
7) SUMMARY REPORTS OF TOPOGRAPHIC SURVEY AND SOIL INVESTIGATION AND CONSTRUCTED MATERIAL TESTS.
   SOIL INVESTIGATION FOR BRIDGE APPROACH ROAD WITH MSE WALL, THE CONTRACTOR SHALL TEST SOIL BORING AT LEAST 2 HOLES AT THE CONSTRUCTED BRIDGE APPROACH ROAD AREA IN EACH SIDE.
   SOIL INVESTIGATION FOR HILL SIDE SLOPE WITH MSE WALL, THE CONTRACTOR SHALL TEST SOIL BORING AT EVERY 200 METERS. IN CASE OF THE SOILS ARE VARIOUS, SHALL INCREASE THE SOIL BORING HOLES AS APPROPRIATE.
8) DOCUMENT OF PROPERTIES, TYPE OF FACING, CALCULATION REPORT, TESTING REPORT AND/OR DETAILS OF PROCEDURES OF MSE WALL CONSTRUCTION SHALL BE SUBMITTED TO ENGINEER FOR REVIEW AND APPROVAL BEFORE BEGINNING OF THE CONSTRUCTION AT LEAST 3 MONTHS.
9) THE CONTRACTOR SHALL PROVIDE INSPECTOR OR SPECIALISTS OF MSE WALL DESIGN AND CONSTRUCTION, TO GIVE SUGGESTION AND MANAGE THE CONSTRUCTION ALONG WITH PREPARING THE MSE WALL CONSTRUCTION REPORT DURING CONSTRUCTION PERIOD.

ADVANTAGES OF MSE WALL

1) MSE WALL SYSTEM CONSTRUCTION IS RELATIVELY RAPID AND DOES NOT REQUIRE SPECIALIZED LABOR OR EQUIPMENT.
2) MSE WALL SYSTEMS ARE FLEXIBLE AND CAN ACCOMMODATE MODERATE SETTLEMENTS WITHOUT DISTRESS.
3) SOIL REINFORCEMENT IS LIGHT AND EASY TO HANDLE.
4) CONCRETE FACING PANELS CAN PROVIDE OPTION IN ACCORDANCE WITH LANDSCAPE AND ARCHITECTURE.

LIMITATION OF MSE WALL

IN GENERAL, MSE WALL SHALL NOT BE USED WHERE:

1) TWO WALLS MEET AND FORM AN ANGLE LESS THAN 70 DEG.
2) THERE IS SCOUR OR EROSION POTENTIAL THAT MAY UNDERMINE THE REINFORCED FILL ZONE OR ANY SUPPORTING FOOTING.
3) THERE IS GROUNDWATER FLOW OR A HIGH GROUNDWATER LEVEL WITHIN THE REINFORCED FILL ZONE OR FOOTING AREA.
4) WALLS HAVE HIGH CURVATURE (RADIUS LESS THAN 15 METERS)
5) SOIL IS CONTAMINATED BY CORROSIVE MATERIAL SUCH AS ACID MINE DRAINAGE, OTHER INDUSTRIAL POLLUTANTS OR ANY OTHER CONDITION WHICH INCREASES CORROSION RATE SUCH AS PRESENCE OF STRAY ELECTRICAL CURRENTS.
6) WALL HEIGHT IS HIGHER THAN 15 M. IN CASE OF WALL HEIGHT IS HIGHER THAN 15 M, NEED TO DESIGN AS SPECIAL OR MULTI-STEP WALLS MAY BE USED.
7) SITES WHERE EXTENSIVE EXCAVATION IS REQUIRED OR SITES THAT LACK GRANULAR SOILS AND COST OF IMPORTING SUITABLE FILL MATERIAL MAY RENDER THE SYSTEM UNECONOMICAL.
8) DO NOT USE AS BREAKWATER OR CONSTRUCT ALONG SHORELINES OR TIDE ZONE OR FLOOD AREA.
9) THERE IS POTENTIAL FOR PLACING BURIED UTILITIES WITHIN THE REINFORCED ZONE.
10) BACK TO BACK WALLS WHEN THE DISTANCE BETWEEN THE WALLS IS LESS THAN 1.2 M, WHERE IT IS THE LARGER HEIGH T OF THE TWO WALLS.
11) THERE IS POTENTIAL OF PLACING TREES OR PLANTS WITHIN THE REINFORCED ZONE.
12) THE LIMIT OF RIGHT OF WAY IS NOT SUFFICIENT TO CONTAIN THE ENTIRE LENGTH OF EARTH REINFORCEMENT AND ANY NEEDED CLEARANCE FOR UTILITIES OR/AND FUTURE EXCAVATION.
13) GRADE AT TOE OF WALL EXCEEDS 1:4 (V:H) SLOPE.

DESIGN CRITERIA

1) THE DESIGN SHALL BE IN ACCORDANCE WITH THE MSE WALL DESIGN AND CONSTRUCTION PROVISION OF THE AASHTO STANDARD SPECIFICATIONS FOR HIGHWAY BRIDGES, 17TH EDITION-2002.
2) THE DESIGN SHALL CONSIDER THE INTERNAL, EXTERNAL, AND COMPOUND STABILITY OF THE WALL MASS INCLUDING OVERTURNING, SLIDING, BEARING PRESSURE, OVERALL STABILITY, AND STABILITY OF TEMPORARY CONSTRUCTION SLOPES.
3) DESIGN PARAMETER OF MATERIAL FOR BOTH BRIDGE APPROACH ROAD AND HILL SIDE SLOPE WITH MSE WALL DESIGN.

MATERIALS	DENSITY (KN/M^3)	ANGLE OF INTERNAL FRICTION (DEG.)	COHESION (KN/M^2)
SELECTED BACKFILL	18-20	30-32*	0
GENERAL BACKFILL	20	30	0
FOUNDATION GROUND	20	30	0

*ANGLE OF INTERNAL FRICTION = 32 (BRIDGE APPROACH ROAD), =30 (HILL SIDE SLOPE)

4) FACTOR OF EXTERNAL STABILITY SAFETY SHALL BE 2.0 FOR OVERTURNING, 1.5 FOR SLIDING, 2.5 FOR BEARING CAPACITY, AND 1.5 FOR OVERALL STABILITY.
5) FACTOR OF INTERNAL STABILITY SAFETY SHALL BE 1.5 FOR BOTH TENSILE FAILURE AND PULL OUT FAILURE.
6) SUPERIMPOSED LOAD IS 2 TON/M2
7) DESIGN LIFE FOR REINFORCING MATERIAL IS 75 YEARS.
8) THE DESIGN DOES NOT ALLOW FOR THE PRESENCE OF A PERMANENT OR TEMPORARY WATER LEVEL WITHIN THE EARTH REINFORCEMENT OR BACKFILL.

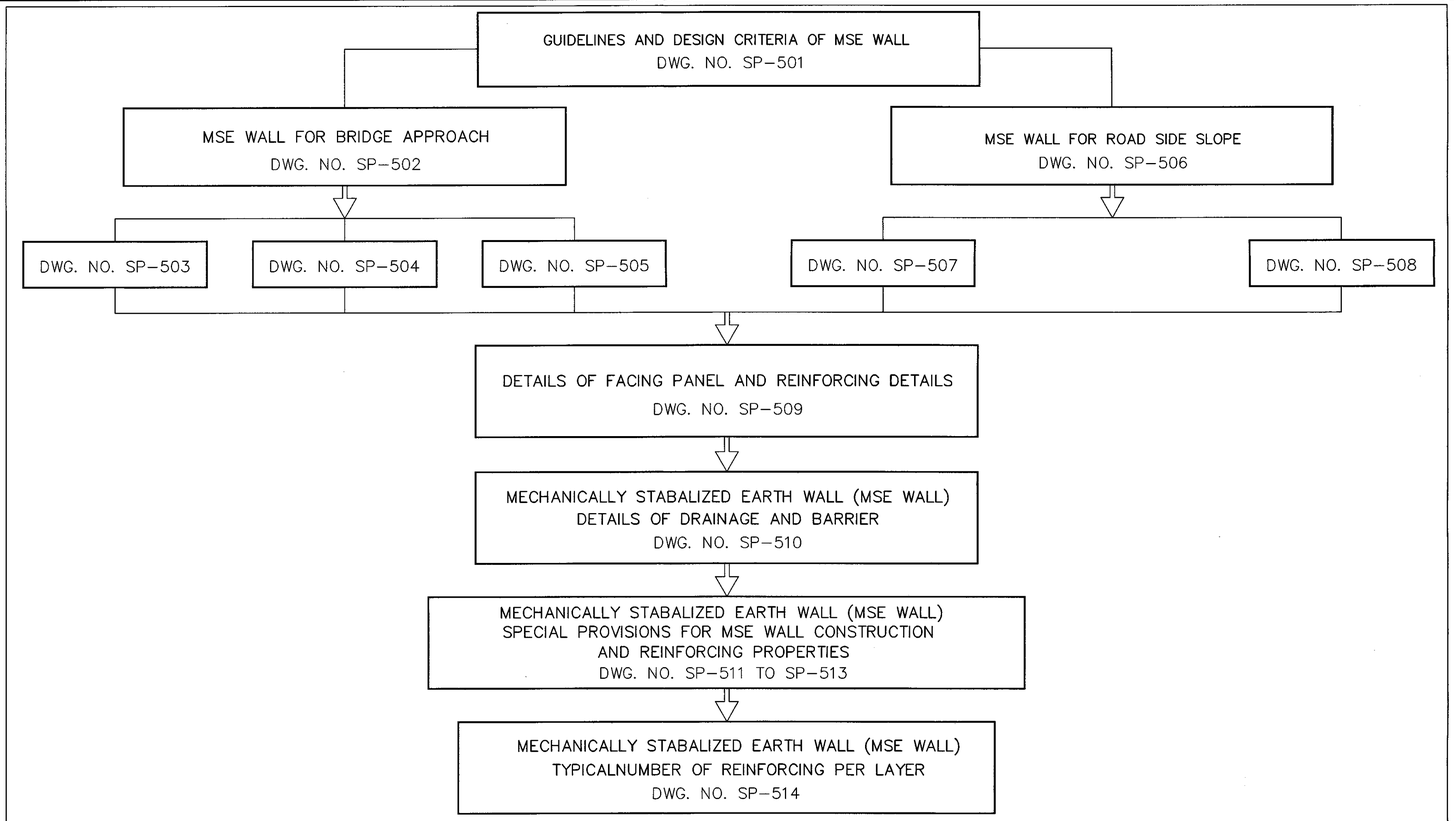

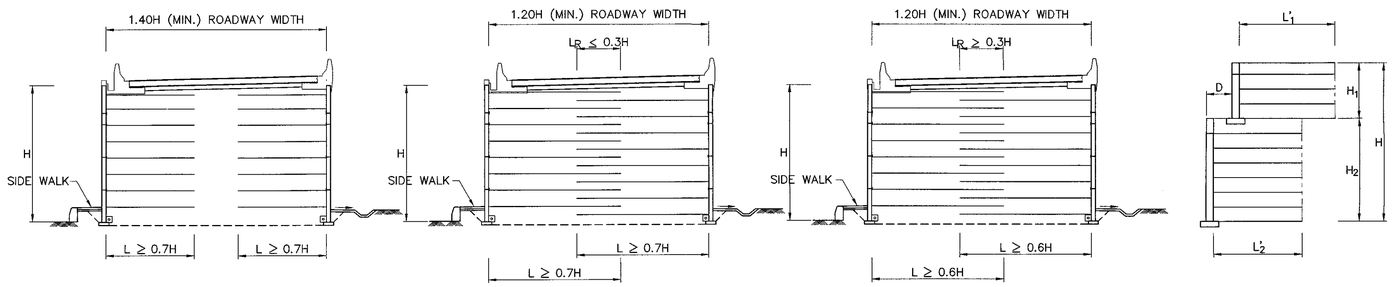

BACK TO BACK MSE WALL WHEN FACE EACH OTHER

IN CASE OF $L_R \geq 0.3$ HEIGHT OF THE SHORTER OF PARALLEL WALLS, NO NEED TO CONSIDER ACTIVE EARTH PRESSURE FROM BACKFILL. HOWEVER, L ≥ 0.6 H SHALL BE CONSIDERED.

CRITERIA FOR MULTI-STEP MSE WALL (SUPERIMPOSED MSE WALL)

1) WHEN $\frac{H_1 + H_2}{20} < D$, LENGTH OF EARTH REINFORCEMENT IN EACH OF LAYERS ARE FOLLOWING:
   UPPER WALL; L1 ≥ 0.7H
   LOWER WALL; L2 ≥ 10.6H
2) WHEN $D \leq \frac{H_1 + H_2}{20}$, THE WALLS SHOULD BE DESIGNED AS A SINGLE WALL WITH A HEIGHT H
3) EXTERNAL STABILITY CALCULATIONS FOR THE UPPER WALL ARE CONVENTIONALLY PERFORMED.
4) FOR THE LOWER WALL, CONSIDER THE UPPER WALL AS A SURCHARGE IN COMPUTING BEARING PRESSURES.
5) FOR INTERNAL STABILITY COMPUTATION OF LARGE SET BACK DISTANCE; D ≥ H2 TAN (90° − ø), THE UPPER WALL IS NEGLECTED.

SYMBOL DEFINITION

H = HEIGHT OF MSE WALL
H1 = HEIGHT OF UPPER MSE WALL
H2 = HEIGHT OF LOWER MSE WALL
L = LENGTH OF EARTH REINFORCEMENT IN MSE WALL
L1 = LENGTH OF EARTH REINFORCEMENT AT THE UPPER MSE WALL
L2 = LENGTH OF EARTH REINFORCEMENT AT THE LOWER MSE WALL
LR = LENGTH OF EARTH REINFORCEMENT WHICH ARE OVERLAPPING
D = WIDTH OF SHOULDER OF MULTI-STEP MSE WALL
ø = ANGLE OF INTERNAL OF EARTH REINFORCEMENT

REF.	REVISION	SIGNATURE	DATE

KINGDOM OF THAILAND

MINISTRY OF TRANSPORT
DEPARTMENT OF HIGHWAYS

STANDARD DRAWING

MECHANICALLY STABALIZED EARTH WALL (MSE WALL)
GUIDELINES AND DESIGN CRITERIA OF MSE WALL

DESIGNED : D.O.H. & CONSULTANTS	CHECKED : BUREAU OF LOCATION & DESIGN	DATE : OCT 2015
SUBMITTED : (DIRECTOR OF LOCATION & DESIGN BUREAU)		SCALE : AS SHOWN
APPROVED : (FOR DIRECTOR GENERAL)		DWG NO. SP-501
		SHEET NO. 132

D:\std dwg 2015\SP-501(REV00)

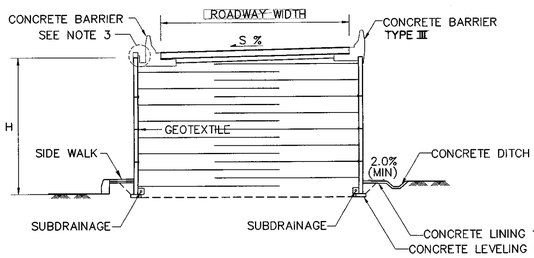

TYPICAL SECTION FOR SINGLE LANE
SCALE 1:150

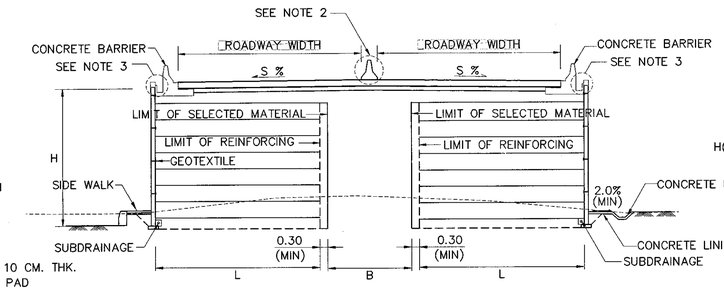

TYPICAL SECTION FOR MULTIPLE LANE
SCALE 1:150

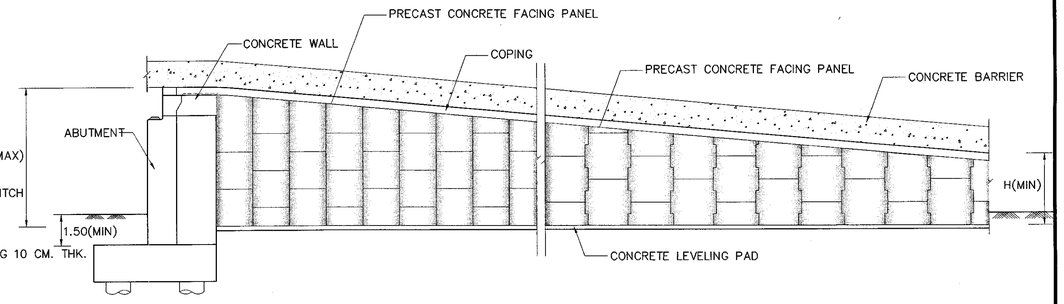

FRONT ELEVATION
SCALE 1:150

TYPE I (FOR ABUTMENT ON PILE FOUNDATIONS)

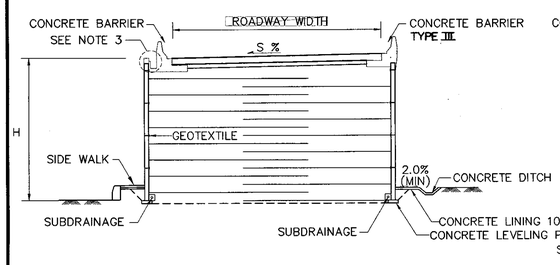

TYPICAL SECTION FOR SINGLE LANE
SCALE 1:150

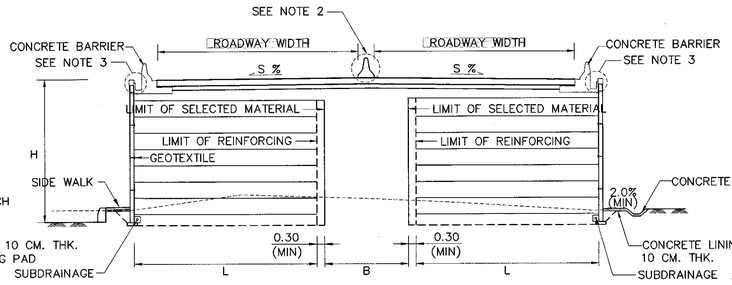

TYPICAL SECTION FOR MULTIPLE LANE
SCALE 1:150

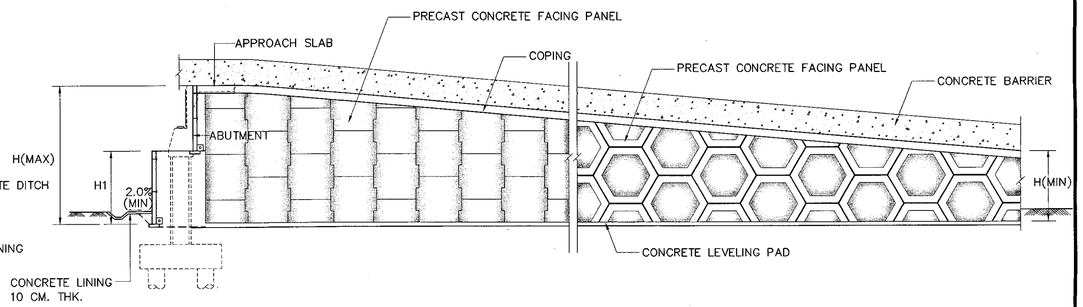

FRONT ELEVATION
SCALE 1:150

TYPE II (FOR ABUTMENT ON PILE FOUNDATIONS)

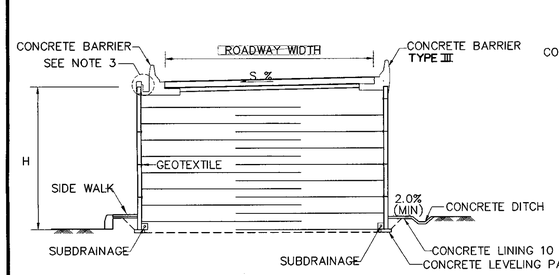

TYPICAL SECTION FOR SINGLE LANE
SCALE 1:150

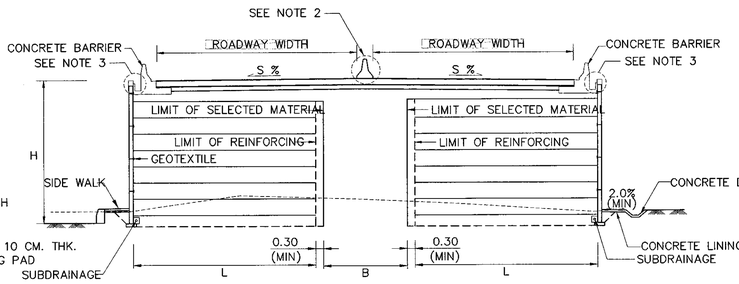

TYPICAL SECTION FOR MULTIPLE LANE
SCALE 1:150

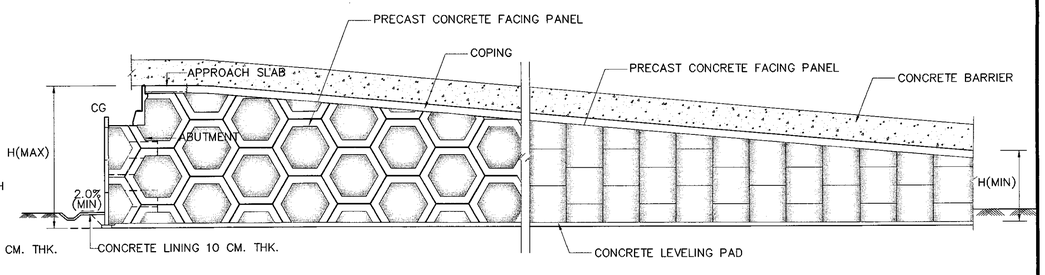

FRONT ELEVATION
SCALE 1:150

TYPE III (FOR ABUTMENT ON MSE WALL)

LEGENDS :

- l = LENGTH OF MSE WALL
- H = HEIGHT OF MSE WALL
- L = LENGTH OF EARTH REINFORCEMENT
- B = WIDTH OF FILL MATERIAL

NOTES :

1. ALL DIMENSIONS SHO9WN ARE IN METERS, UNLESS OTHERWISE INDICATED.
2. TYPE OF MIDDLE BARRIER SHALL CONFORM TO ROADWAY SECTION OF THE PROJECT.
3. THE DRAINAGE SYSTEM SHALL BE DESIGNED ACCORDING TO THE SITE CONDITIONS, RAINFALL AND SURFACE WATER QUANTITY.
4. THE MSE WALL STRUCTURE SHALL BE DESIGNED AND CONSTRUCTED IN ACCORDANCE WITH THE REQUIREMENTS OF ARTICLE 5.8 DIVISION I–DESIGN, OF THE AASHTO STANDARD SPECIFICATIONS FOR HIGHWAY BRIDGES, SEVENTEENTH EDITION 2002.
5. WORKING DRAWINGS AND DESIGN CALCULATIONS SHALL BE SUBMITTED TO THE ENGINEERS FOR REVIEW AND APPROVAL BEFORE BEGINNING OF THE CONSTRUCTION.
6. FACING CONCRETE SYSTEM SHALL BE PRECAST CONCRETE. THE MINIMUM PANEL THICKNESS AT AND IN THE VICINITY OF EMBEDDED CONNECTIONS SHALL BE 140 MM. AND 90 MM. ELSEWHERE.
7. MAXIMUM SURCHARGE LOAD AT PAVEMENT SURFACE EQUAL TO 2 TON/SQ.M.
8. WHEN THE B IS LESS THAN 250 M, THE FILL MATERIAL SHALL BE COMPACTED SELECTED MATERIAL.
9. TYPES OF FACING SHOWN IN THIS DRAWING ARE FOR SAMPLE ONLY.

REF.	REVISION	SIGNATURE	DATE

KINGDOM OF THAILAND

MINISTRY OF TRANSPORT
DEPARTMENT OF HIGHWAYS

STANDARD DRAWING

MECHANICALLY STABALIZED EARTH WALL (MSE WALL)
GENERAL ARRANGMENNT MSE WALL FOR BRIDGE APPROACH

DESIGNED : D.O.H. & CONSULTANTS	CHECKED : BUREAU OF LOCATION & DESIGN	DATE : OCT 2015
SUBMITTED : (DIRECTOR OF LOCATION & DESIGN BUREAU)		SCALE : AS SHOWN
APPROVED : (FOR DIRECTOR GENERAL)		DWG NO. SP–502
		SHEET NO. 133

D:\std dwg 2015\SP-502(REV00)

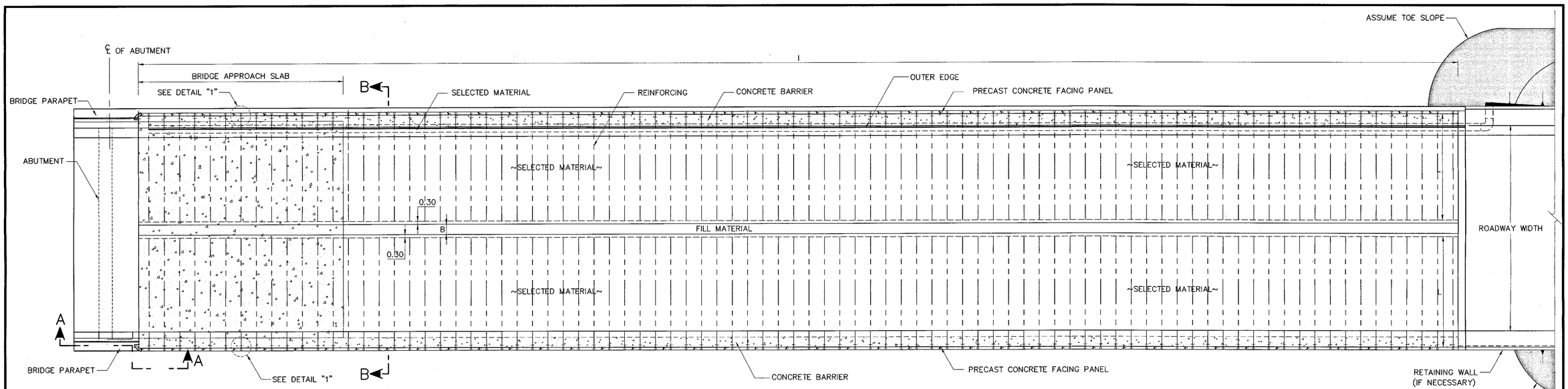

TYPICAL PLAN OF BRIDGE APPROACH ROAD WITH MSE WALL TYPE I

SCALE 1 : 100

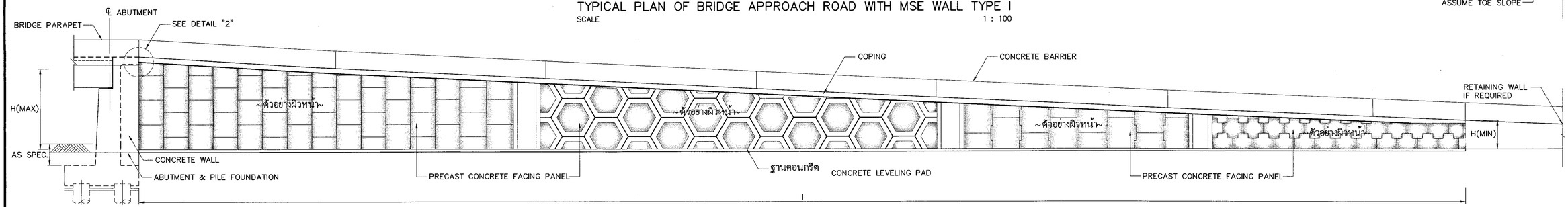

FRONT ELEVATION OF BRIDGE APPROACH ROAD WITH MSE WALL TYPE I

SCALE 1 : 100

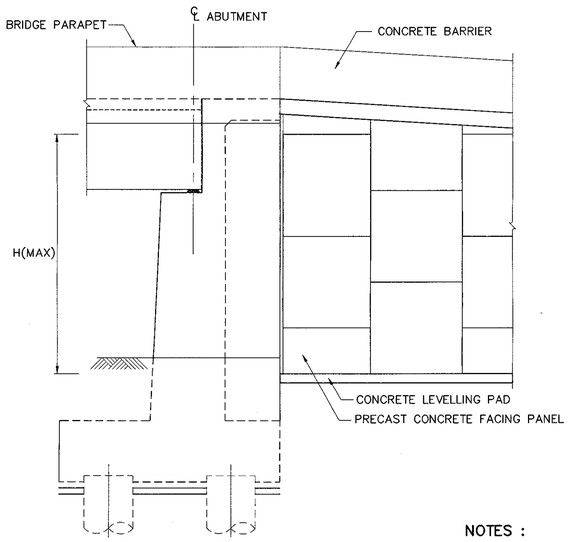

SECTION A–A

SCALE 1:75

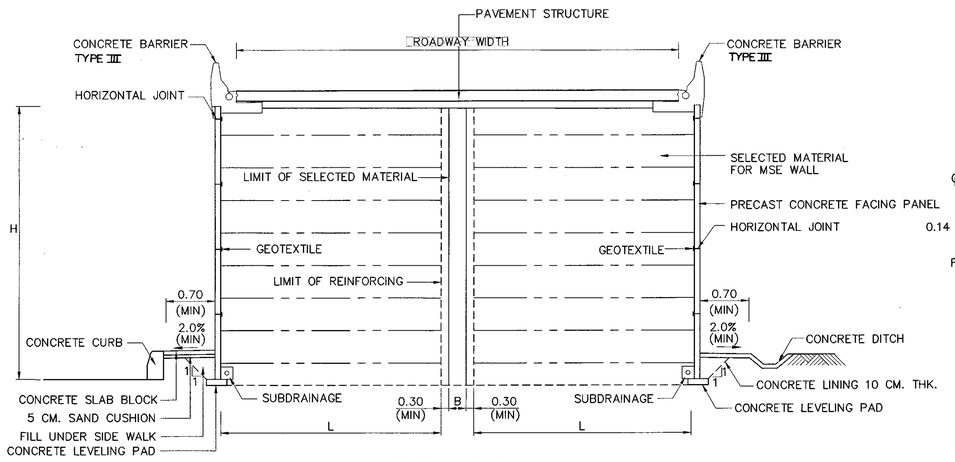

SECTION B–B

SCALE 1:75

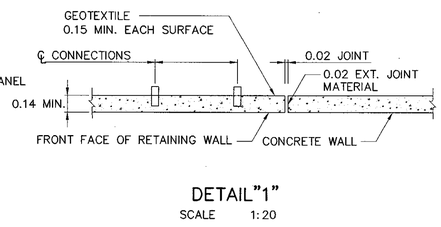

DETAIL"1"

SCALE 1:20

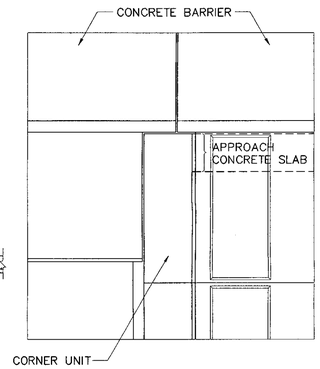

DETAIL"2"

SCALE 1:20

SYMBOL DEFINITION

- I = LENGTH OF MSE WALL
- H = HEIGHT OF MSE WALL
- L = LENGTH OF EARTH REINFORCEMENT
- B = WIDTH OF FILL MATERIAL

NOTES :

1. ALL DIMENSIONS SHOWN ARE IN METERS, UNLESS OTHERWISE INDICATED.
2. THE MSE WALL STRUCTURE SHALL BE DESIGNED AND CONSTRUCTED IN ACCORDANCE WITH THE REQUIREMENTS OF ARTICLE 5.8 DIVISION I–DESIGN, OF THE AASHTO STANDARD SPECIFICATIONS FOR HIGHWAY BRIDGES, SEVENTEENTH EDITION 2002.
3. WORKING DRAWINGS AND DESIGN CALCULATIONS SHALL BE SUBMITTED TO THE ENGINEERS FOR REVIEW AND APPROVAL BEFORE BEGINNING OF THE CONSTRUCTION.
4. FACING CONCRETE SYSTEM SHALL BE PRECAST CONCRETE. THE MINIMUM PANEL THICKNESS AT AND IN THE VICINITY OF EMBEDED CONNECTIONS SHALL BE 140 MM. AND 90 MM. ELSEWHERE
5. MAXIMUM SURCHARGE LOAD AT PAVEMENT SURFACE EQUAL TO 2 TON/SQ.M.
6. WHEN THE B IS LESS THAN 250 M, THE FILL MATERIAL SHALL BE COMPACTED SELECTED MATERIAL.
7. TYPES OF FACING SHOWN IN THIS DRAWING ARE FOR SAMPLE ONLY.

REF.	REVISION	SIGNATURE	DATE

KINGDOM OF THAILAND

MINISTRY OF TRANSPORT
DEPARTMENT OF HIGHWAYS

STANDARD DRAWING

MECHANICALLY STABALIZED EARTH WALL (MSE WALL)
MSE WALL FOR BRIDGE APPROACH TYPE I

DESIGNED : D.O.H. & CONSULTANTS	CHECKED : BUREAU OF LOCATION & DESIGN	DATE : OCT 2015
SUBMITTED : (DIRECTOR OF LOCATION & DESIGN BUREAU)		SCALE : AS SHOWN
APPROVED : (FOR DIRECTOR GENERAL)		DWG NO. SP–503
		SHEET NO. 134

D:\std dwg 2015\SP-503(REV00)

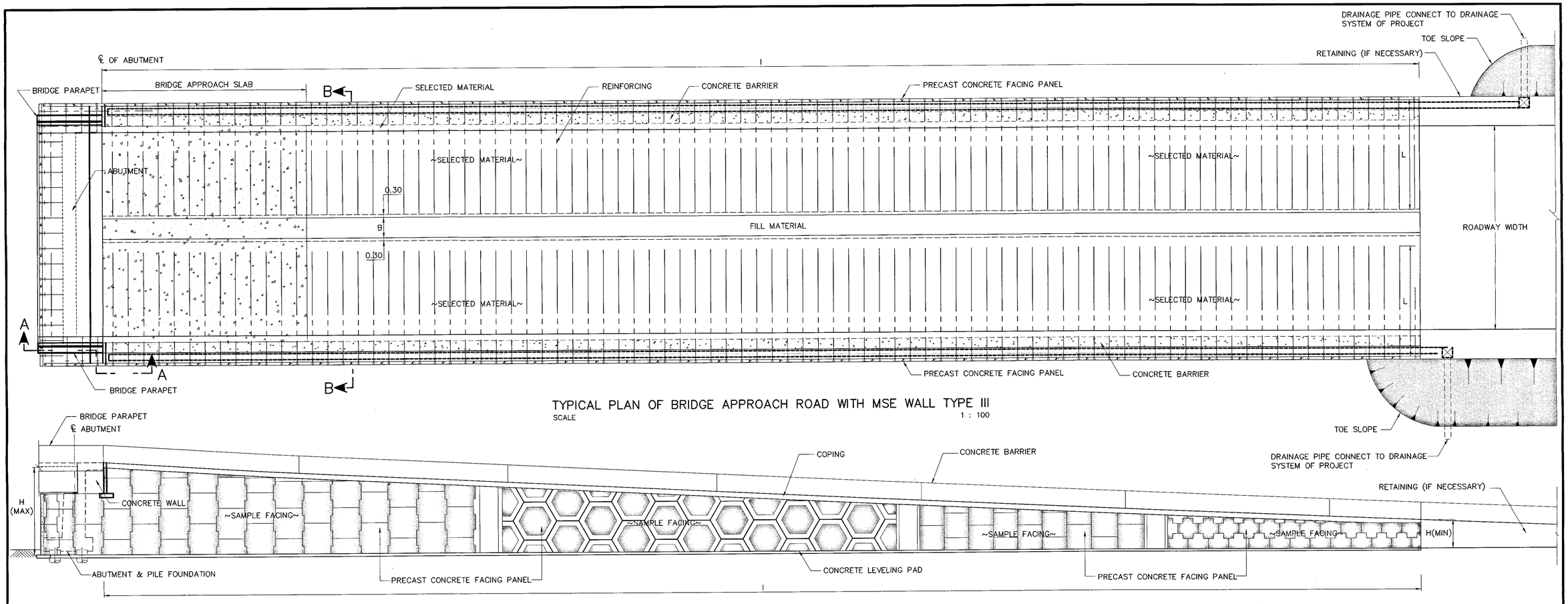

TYPICAL PLAN OF BRIDGE APPROACH ROAD WITH MSE WALL TYPE III

SCALE 1 : 100

FRONT ELEVATION OF BRIDGE APPROACH ROAD WITH MSE WALL TYPE III

SCALE 1 : 100

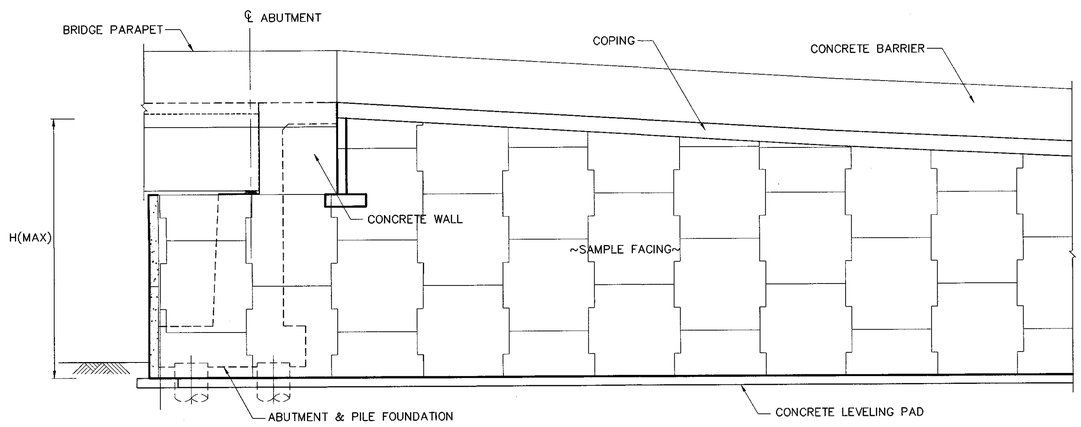

SECTION A–A

SCALE 1:75

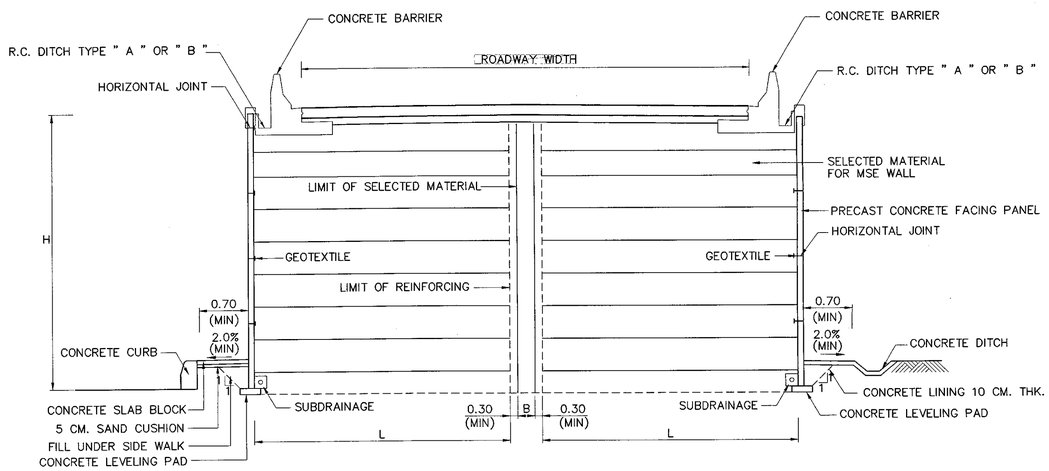

SECTION B–B

SCALE 1:75

NOTES :

1. ALL DIMENSIONS SHOWN ARE IN METERS, UNLESS OTHERWISE INDICATED.
2. THE MSE WALL STRUCTURE SHALL BE DESIGNED AND CONSTRUCTED IN ACCORDANCE WITH THE REQUIREMENTS OF ARTICLE 5.8 DIVISION I–DESIGN, OF THE AASHTO STANDARD SPECIFICATIONS FOR HIGHWAY BRIDGES, SEVENTEENTH EDITION 2002.
3. WORKING DRAWINGS AND DESIGN CALCULATIONS SHALL BE SUBMITTED TO THE ENGINEERS FOR REVIEW AND APPROVAL BEFORE BEGINNING OF THE CONSTRUCTION.
4. FACING CONCRETE SYSTEM SHALL BE PRECAST CONCRETE. THE MINIMUM PANEL THICKNESS AT AND IN THE VICINITY OF EMBEDED CONNECTIONS SHALL BE 140 MM. AND 90 MM. ELSEWHERE
5. MAXIMUM SURCHARGE LOAD AT PAVEMENT SURFACE EQUAL TO 2 TON/SQ.M.
6. WHEN THE B IS LESS THAN 250 M, THE FILL MATERIAL SHALL BE COMPACTED SELECTED MATERIAL.
7. TYPES OF FACING SHOWN IN THIS DRAWING ARE FOR SAMPLE ONLY.

LEGENDS :

I = LENGTH OF MSE WALL
H = HEIGHT OF MSE WALL
L = LENGTH OF EARTH REINFORCEMENT
B = WIDTH OF FILL MATERIAL

REF.	REVISION	SIGNATURE	DATE

KINGDOM OF THAILAND

MINISTRY OF TRANSPORT
DEPARTMENT OF HIGHWAYS

STANDARD DRAWING

MECHANICALLY STABALIZED EARTH WALL (MSE WALL)
MSE WALL FOR BRIDGE APPROACH TYPE II

DESIGNED : D.O.H. & CONSULTANTS	CHECKED : BUREAU OF LOCATION & DESIGN	DATE : OCT 2015
SUBMITTED : (DIRECTOR OF LOCATION & DESIGN BUREAU)		SCALE : AS SHOWN
APPROVED : (FOR DIRECTOR GENERAL)		DWG NO. SP–504
		SHEET NO. 135

D:\std dwg 2015\SP-504(REV00)

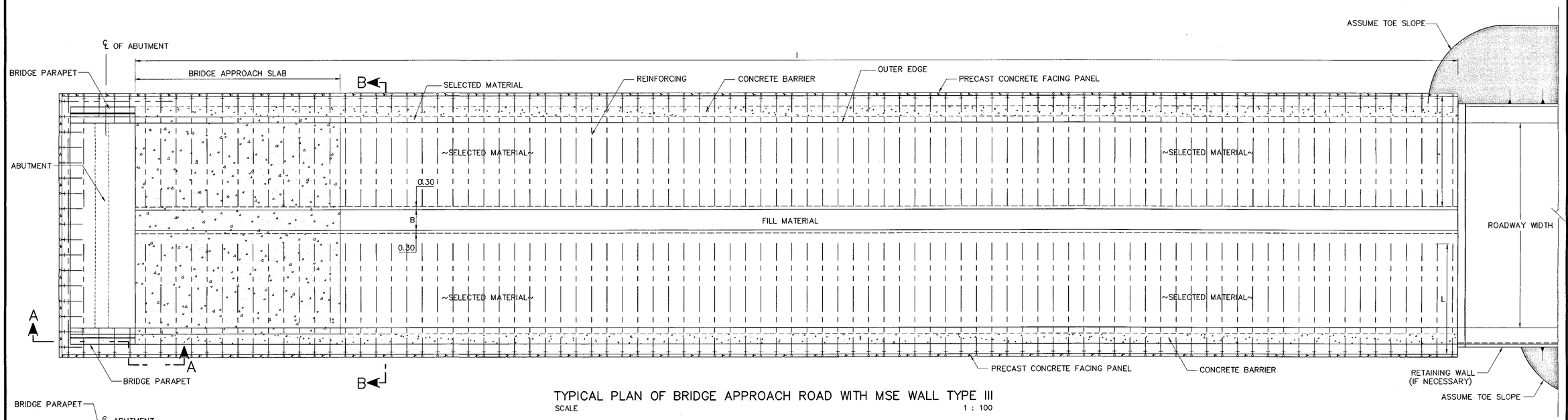

TYPICAL PLAN OF BRIDGE APPROACH ROAD WITH MSE WALL TYPE III

SCALE 1 : 100

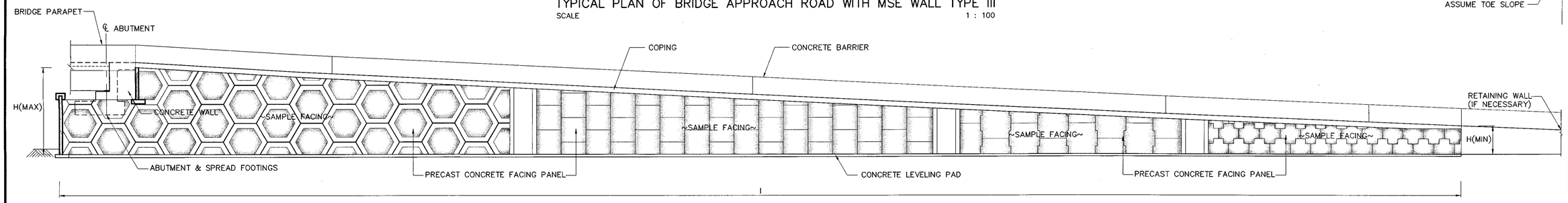

FRONT ELEVATION OF BRIDGE APPROACH ROAD WITH MSE WALL TYPE III

SCALE 1 : 100

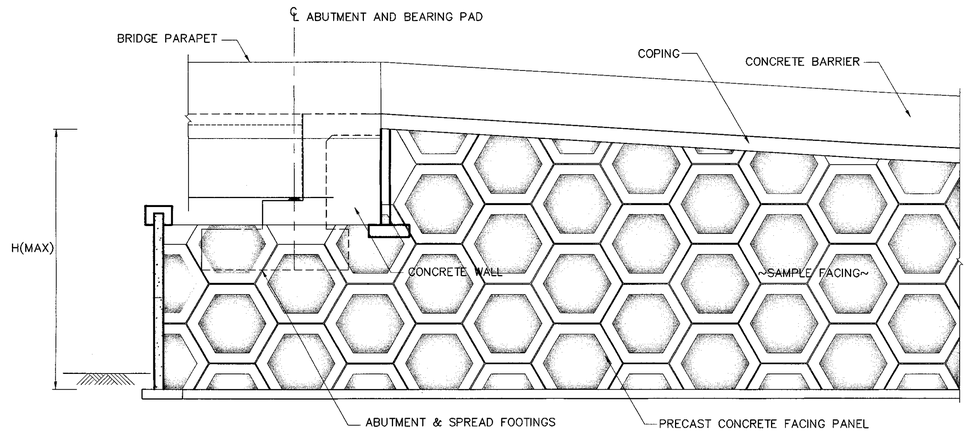

SECTION A–A

SCALE 1:75

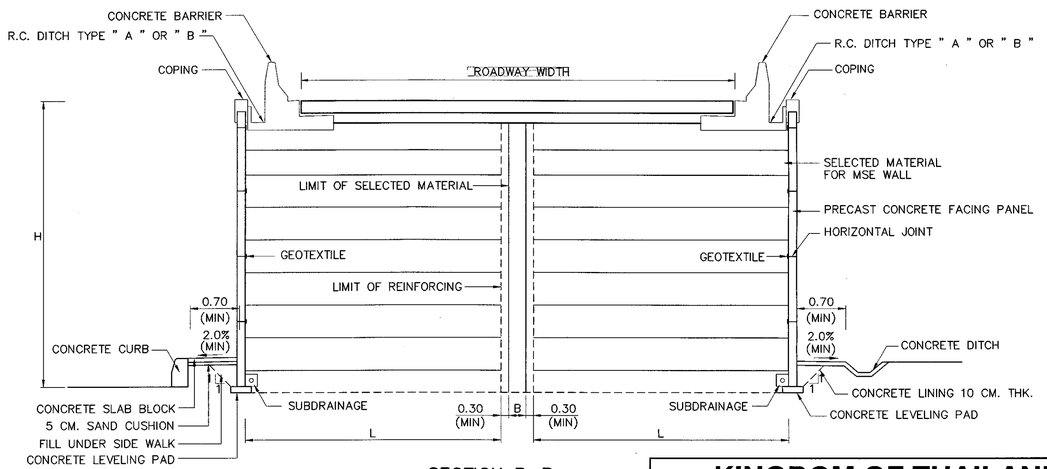

SECTION B–B

SCALE 1:75

NOTES :

1. ALL DIMENSIONS SHOWN ARE IN METERS, UNLESS OTHERWISE INDICATED.
2. THE MSE WALL STRUCTURE SHALL BE DESIGNED AND CONSTRUCTED IN ACCORDANCE WITH THE REQUIREMENTS OF ARTICLE 5.8 DIVISION I–DESIGN, OF THE AASHTO STANDARD SPECIFICATIONS FOR HIGHWAY BRIDGES, SEVENTEENTH EDITION 2002.
3. WORKING DRAWINGS AND DESIGN CALCULATIONS SHALL BE SUBMITTED TO THE ENGINEERS FOR REVIEW AND APPROVAL BEFORE BEGINNING OF THE CONSTRUCTION.
4. FACING CONCRETE SYSTEM SHALL BE PRECAST CONCRETE. THE MINIMUM PANEL THICKNESS AT AND IN THE VICINITY OF EMBEDED CONNECTIONS SHALL BE 140 MM. AND
5. MAXIMUM SURCHARGE LOAD AT PAVEMENT SURFACE EQUAL TO 2 TON/SQ.M.
6. WHEN THE B IS LESS THAN 250 M, THE FILL MATERIAL SHALL BE COMPACTED SELECTED MATERIAL.
7. TYPES OF FACING SHOWN IN THIS DRAWING ARE FOR SAMPLE ONLY.

LEGENDS :

I = LENGTH OF MSE WALL
H = HEIGHT OF MSE WALL
L = LENGTH OF EARTH REINFORCEMENT
B = WIDTH OF FILL MATERIAL

REF.	REVISION	SIGNATURE	DATE

KINGDOM OF THAILAND

MINISTRY OF TRANSPORT
DEPARTMENT OF HIGHWAYS

STANDARD DRAWING

MECHANICALLY STABALIZED EARTH WALL (MSE WALL)
MSE WALL FOR BRIDGE APPROACH TYPE III

DESIGNED : D.O.H. & CONSULTANTS	**CHECKED :** BUREAU OF LOCATION & DESIGN	**DATE :** OCT 2015
SUBMITTED : (DIRECTOR OF LOCATION & DESIGN BUREAU)		**SCALE :** AS SHOWN
APPROVED : (FOR DIRECTOR GENERAL)		**DWG NO.** SP–505
		SHEET NO. 136

D:\std dwg 2015\SP-505(DE100)

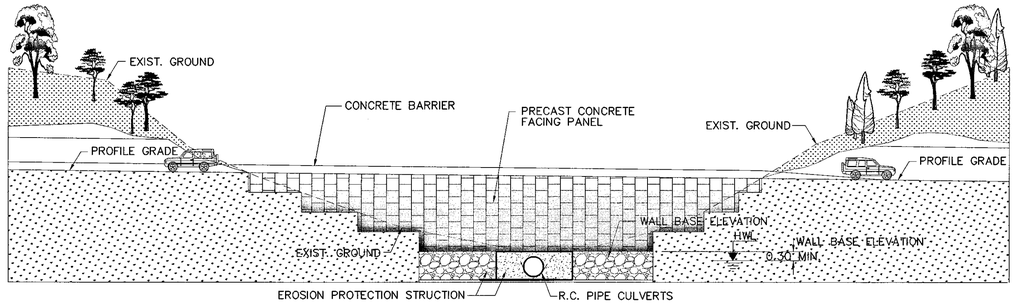

SIDE VIEW OF ROAD SIDE SLOPE WITH MSE WALL SINGLE STEP

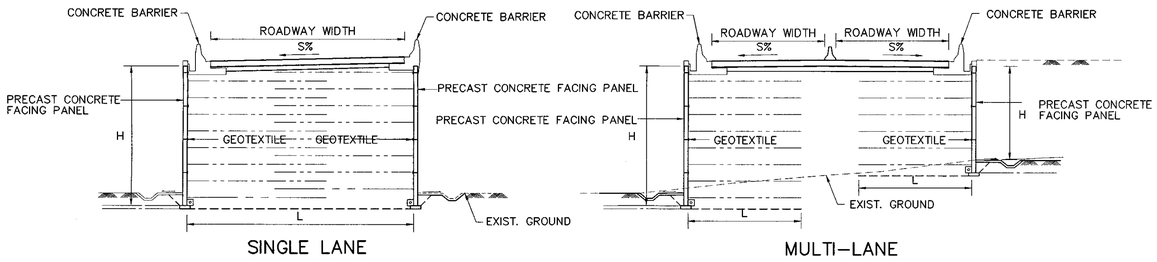

TYPICAL OF ROAD SIDE SLOPE WITH MSE WALL SINGLE STEP

NOT TO SCALE

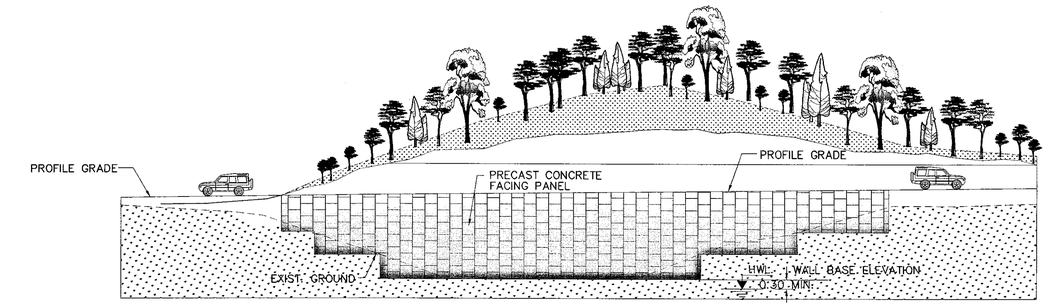

SIDE VIEW OF HILL SIDE SLOPE WITH MSE WALL SINGLE STEP

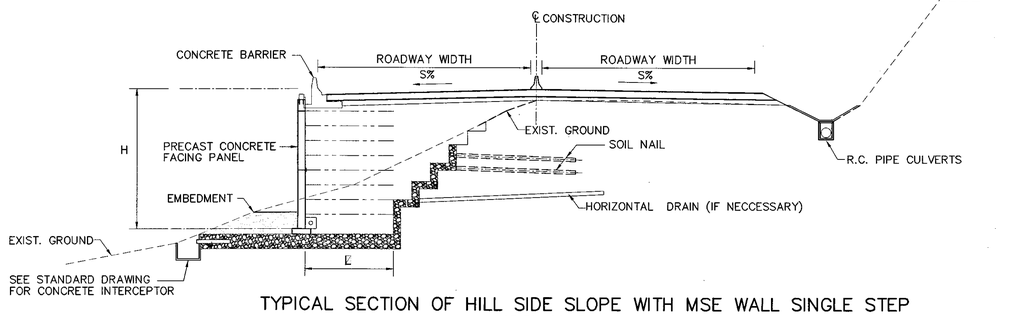

TYPICAL SECTION OF HILL SIDE SLOPE WITH MSE WALL SINGLE STEP

NOT TO SCALE

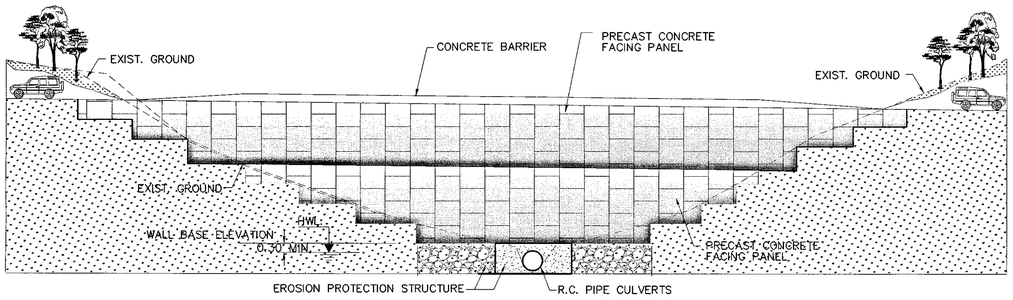

SIDE VIEW OF ROAD SIDE SLOPE WITH MSE WALL MULTI– STEP

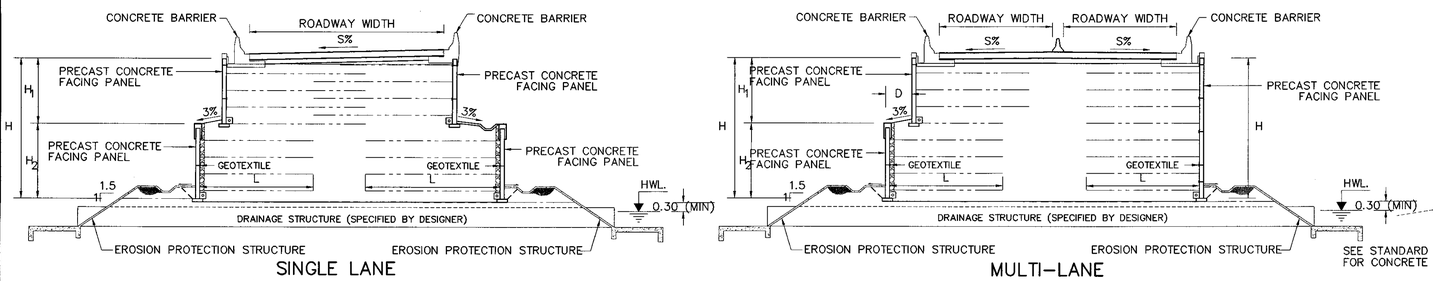

TYPICAL OF ROAD SIDE SLOPE WITH MSE WALL MULTI– STEP

NOT TO SCALE

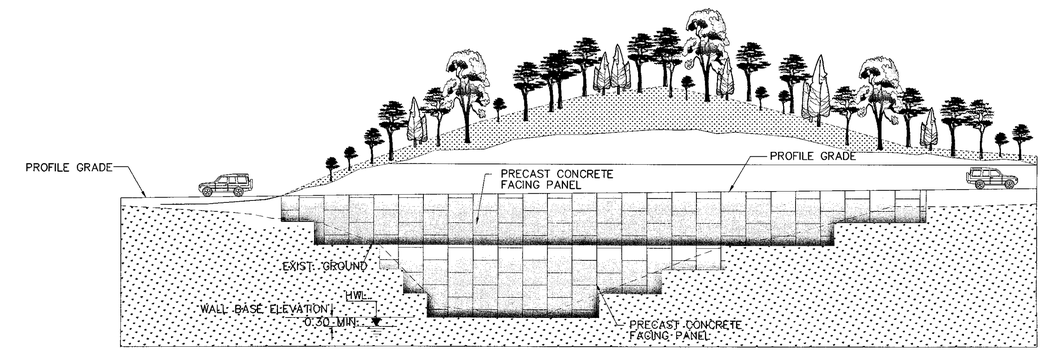

SIDE VIEW OF HILL SIDE SLOPE WITH MSE WALL MULTI– STEP

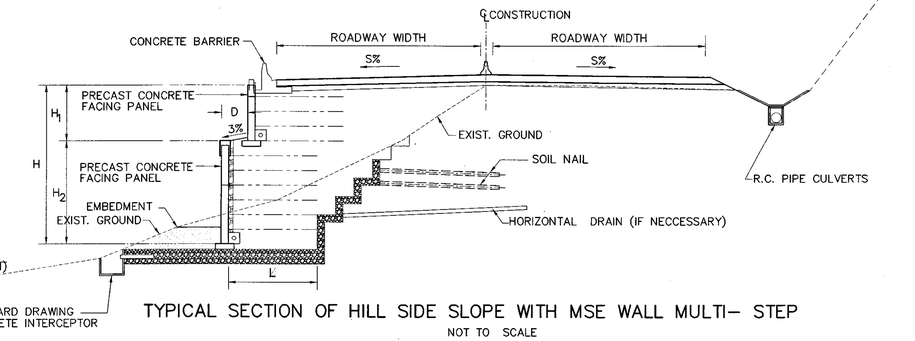

TYPICAL SECTION OF HILL SIDE SLOPE WITH MSE WALL MULTI– STEP

NOT TO SCALE

REMARK :

1. IT IS NOT RECOMMENDED TO CONSTRUCT THE MSE WALL IN THE AREA WHERE WATER CAN FLOW THROUGH THE WALL. IF NECESSARY, THE DRAINAGE ENGINEER SHALL DESIGN AND SUBMIT THE DESIGN CALCULATIONS FOR REVIEW AND APPROVAL.
2. IN CASE OF CONSTRUCTION OF DRAINAGE STRUCTURE UNDER THE MSE WALL, THE DESIGNER SHALL SPECIFY THE DIMENSIONS OF DRAINAGE STRUCTURE WITH SUFFICIENT EROSION PROTECTION. GEOTEXTILES SHALL BE INSTALLED BETWEEN MSE WALLS AND DRAINAGE STRUCTURE. EROSION PROTECTION SYSTEM AT ENTRANCE AND EXIT OF DRAINAGE STRUCTURE IS REQUIRED.

SYMBOLS :

- H = TOTAL HEIGHT OF MSE WALL
- H_1 = HEIGHT OF MSE WALL AT UPPER LAYER
- H_2 = HEIGHT OF MSE WALL AT LOWER LAYER
- L = LENGTH OF REINFORCEMENT
- L_1 = LENGTH OF REINFORCEMENT AT UPPER LAYER
- L_2 = LENGTH OF REINFORCEMENT AT LOWER LAYER
- L_R = LENGTH OF OVERLAP REINFORCEMENT
- D = WIDTH OF MSE WALL MULTI–STEP
- ø = INTERNAL FRICTION ANGLE OF BACKFILL SOIL

REF.	REVISION	SIGNATURE	DATE

KINGDOM OF THAILAND

MINISTRY OF TRANSPORT

DEPARTMENT OF HIGHWAYS

STANDARD DRAWING

MECHANICALLY STABALIZED EARTH WALL (MSE WALL)

GENERAL ARRANGMENNT MSE WALL FOR ROAD SIDE SLOPE

DESIGNED : D.O.H. & CONSULTANTS	CHECKED : BUREAU OF LOCATION & DESIGN	DATE : OCT 2015
SUBMITTED : (DIRECTOR OF LOCATION & DESIGN BUREAU)		SCALE : AS SHOWN
APPROVED : (FOR DIRECTOR GENERAL)		DWG NO. SP–506
		SHEET NO. 137

D:\std dwg 2015\SP-506(REV00)

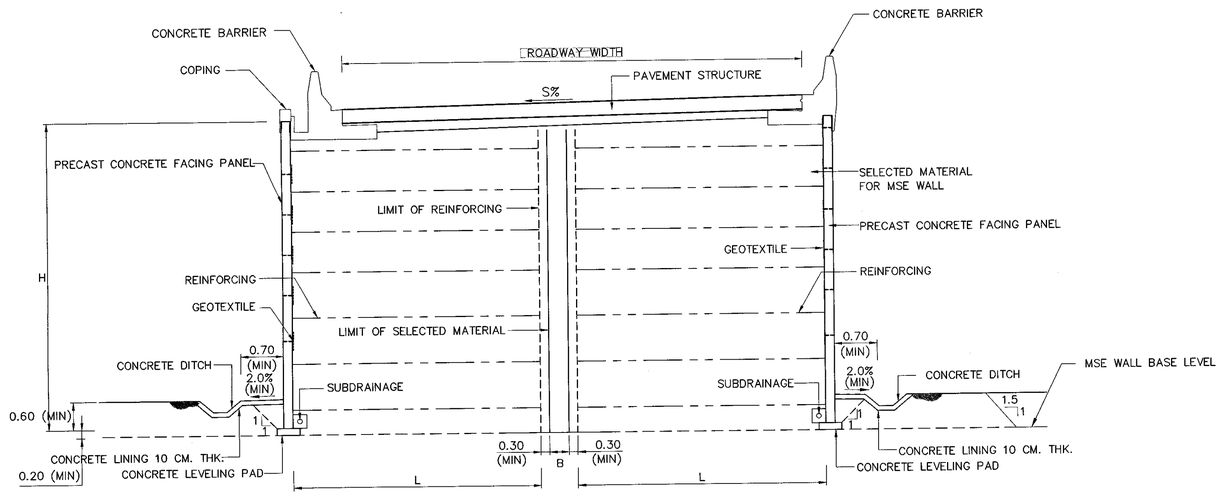

TYPICAL OF ROAD SIDE SLOPE WITH MSE WALL SINGLE STEP

SCALE 1:50

NOTES :

1. ALL DIMENSIONS SHOWN ARE IN METERS, UNLESS OTHERWISE INDICATED.
2. THE MSE WALL STRUCTURE SHALL BE DESIGNED AND CONSTRUCTED IN ACCORDANCE WITH THE REQUIREMENTS OF ARTICLE 5.8 DIVISION I–DESIGN OF THE AASHTO STANDARD SPECIFICATIONS FOR HIGHWAY BRIDGES, 17TH EDITION–2002.
3. WORKING DRAWINGS AND DESIGN CALCULATIONS SHALL BE SUBMITTED TO THE ENGINEERS FOR REVIEW AND APPROVAL BEFORE BEGINNING OF THE CONSTRUCTION. THE CONTRACTOR SHALL NOT START WORK ON ANY EARTH RETAINING SYSTEM FOR WHICH WORKING DRAWINGS ARE REQUIRED UNTIL SUCH DRAWINGS HAVE BEEN APPROVED BY THE ENGINEERS. (APPROVAL OF THE CONTRACTOR'S WORKING DRAWINGS SHALL NOT RELIEVE THE CONTRACTOR OF ANY OF HIS RESPONSIBILITY UNDER THE CONTRACT FOR THE SUCCESSFUL COMPLETION OF THE WORK.
4. FACING CONCRETE SYSTEM SHALL BE PRECAST CONCRETE. THE MINIMUM PANEL THICKNESS AT AND IN THE VICINITY OF EMBEDED CONNECTIONS SHALL NOT LESS THAN 140 MM. AND 90 MM. ELSEWHERE.
5. MAXIMUM SURCHARGE LOAD AT PAVEMENT SURFACE IS EQUAL TO 2 TON/M
6. DRAINAGE SYTEM SHALL BE DESINGED TO SUIT WITH SITE CONDITION. THE DRAINAGE SYTEM DETAILS, EROSION PROTECTION, AND RELEATED PART SHALL BE SHOWN IN WORKING DRAWINGS.
7. MSE WALL IS NOT RECOMMENDED IN THE AREA OF HIGH FLOW OF SURFACE WATER.
8. UNDERGROUND DRAINAGE SYSTEM IS SHOWN IN DWG. NO. SP–510

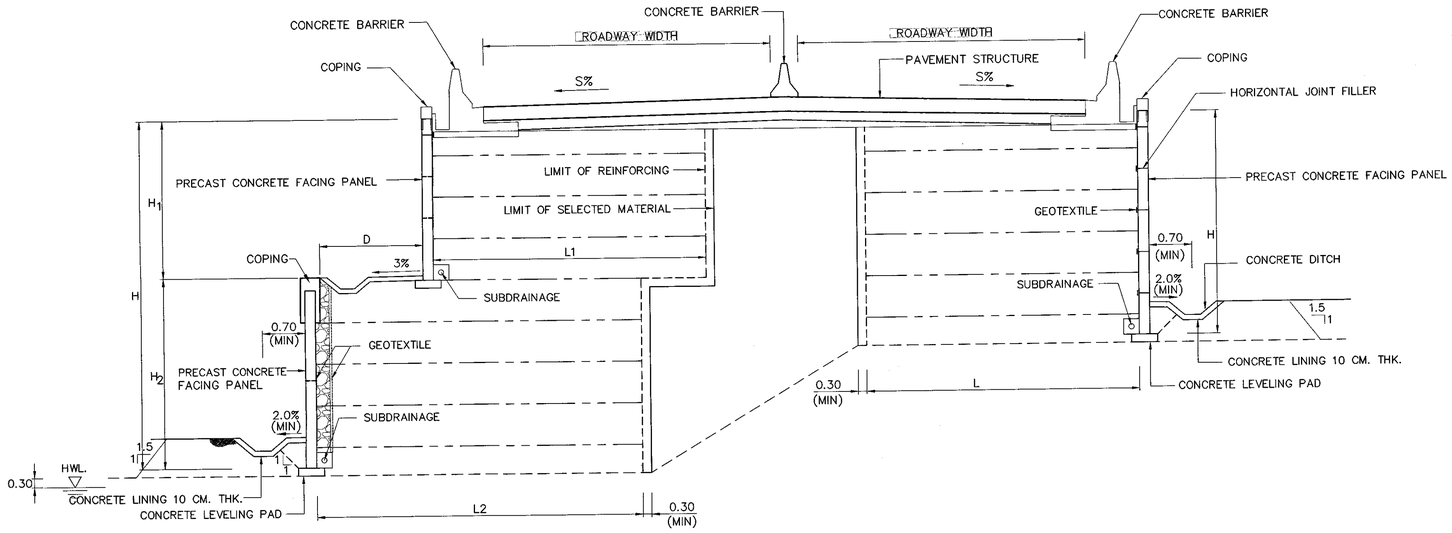

TYPICAL SECTION FOR MULTI– LANE

SCALE 1:50

ABBREVIATIONS :

- H = TOTAL HEIGHT OF MSE WALL
- H_1 = HEIGHT OF MSE WALL AT UPPER LAYER
- H_2 = HEIGHT OF MSE WALL AT LOWER LAYER
- L = LENGTH OF REINFORCEMENT
- L_1 = LENGTH OF REINFORCEMENT AT UPPER LAYER
- L_2 = LENGTH OF REINFORCEMENT AT LOWER LAYER
- L_R = LENGTH OF OVERLAP REINFORCEMENT
- D = WIDTH OF MSE WALL MULTI–STEP
- ø = INTERNAL FRICTION ANGLE OF BACKFILL SOIL

REF.	REVISION	SIGNATURE	DATE

KINGDOM OF THAILAND

MINISTRY OF TRANSPORT

DEPARTMENT OF HIGHWAYS

STANDARD DRAWING

MECHANICALLY STABALIZED EARTH WALL (MSE WALL)

TYPICAL SECTION OF MSE WALL FOR HILL SIDE SLOPE

DESIGNED : D.O.H. & CONSULTANTS	CHECKED : BUREAU OF LOCATION & DESIGN	DATE : OCT 2015
SUBMITTED : (DIRECTOR OF LOCATION & DESIGN BUREAU)		SCALE : AS SHOWN
APPROVED : (FOR DIRECTOR GENERAL)		DWG NO. SP–507
		SHEET NO. 138

D:\std dwg 2015\SP-507(REV00)

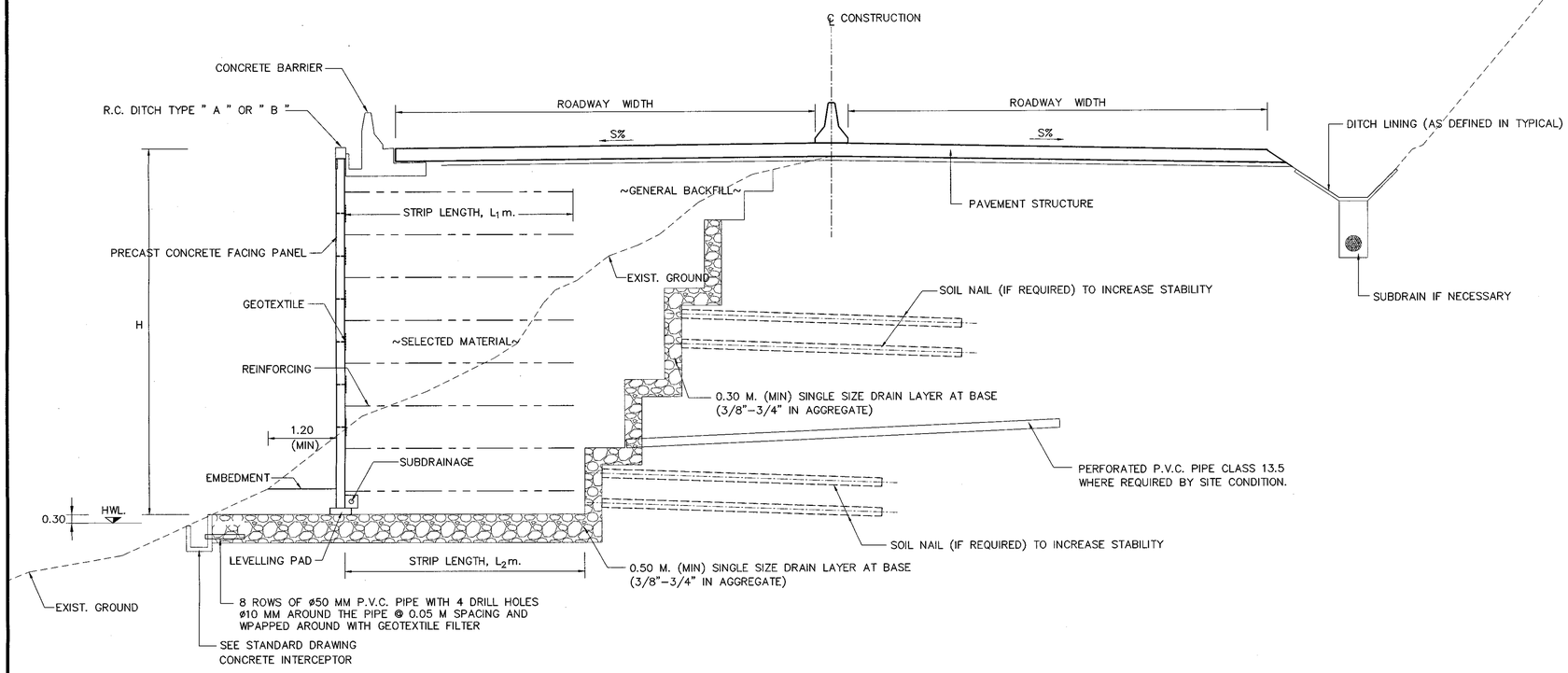

TYPICAL SECTION OF HILL SIDE SLOPE WITH MSE WALL SINGLE STEP

SCALE 1:50

NOTES :

1. ALL DIMENSIONS SHOWN ARE IN METERS, UNLESS OTHERWISE INDICATED.
2. THE MSE WALL STRUCTURE SHALL BE DESIGNED AND CONSTRUCTED IN ACCORDANCE WITH THE REQUIREMENTS OF ARTICLE 5.8 DIVISION I–DESIGN, OF THE AASHTO STANDARD SPECIFICATIONS FOR HIGHWAY BRIDGES, SEVENTEENTH EDITION 2002.
3. WORKING DRAWINGS AND DESIGN CALCULATIONS SHALL BE SUBMITTED TO THE ENGINEERS FOR REVIEW AND APPROVAL BEFORE BEGINNING OF THE CONSTRUCTION WORKING DRAWINGS AND DESIGN CALCULATIONS THE CONTRACTOR SHALL NOT START WORK ON ANY EARTH RETAINING SYSTEM FOR WHICH WORKING DRAWINGS ARE REQUIRED UNTIL SUCH DRAWINGS HAVE BEEN APPROVED BY THE ENGINEERS. APPROVAL OF THE CONTRACTOR'S WORKING DRAWINGS SHALL NOT RELIEVE THE CONTRACTOR OF ANY OF HIS RESPONSIBILITY UNDER THE CONTRACT FOR THE SUCCESSFUL COMPLETION OF THE WORK.
4. FACING CONCRETE SYSTEM SHALL BE PRECAST CONCRETE. THE MINIMUM PANEL THICKNESS AT AND IN THE VICINITY OF EMBEDED CONNECTIONS SHALL BE 140 MM. AND 90 MM. ELSEWHERE
5. MAXIMUM SURCHARGE LOAD AT PAVEMENT SURFACE EQUAL TO 2 TON/SQ.M.
6. THE DRAINAGE SYSTEM SHALL BE DESIGNED ACCORDING TO THE SITE CONDITIONS. THE DETAIL OF DRAINAGE SYSTEM AND THE EROSION PROTECTION SHALL BE SHOWN IN THE CONSTRUCTION DRAWING.
7. THIS METHOD DOES NOT RECOMMEND FOR HIGH SURFACE WATER QUANTITY AREA.

LEGENDS :

H = HEIGHT OF MSE WALL
H1 = HEIGHT OF MSE WALL ON THE UPPER PART
H2 = HEIGHT OF MSE WALL ON THE LOWER PART
L = LENGTH OF EARTH REINFORCEMENT
L1 = LENGTH OF EARTH REINFORCEMENT ON THE UPPER PART
L2 = LENGTH OF EARTH REINFORCEMENT ON THE LOWER PART
D = WIDTH OF BENCH
Ø = INTERNAL FRICTION ANGLE OF SELECTED MATERIAL

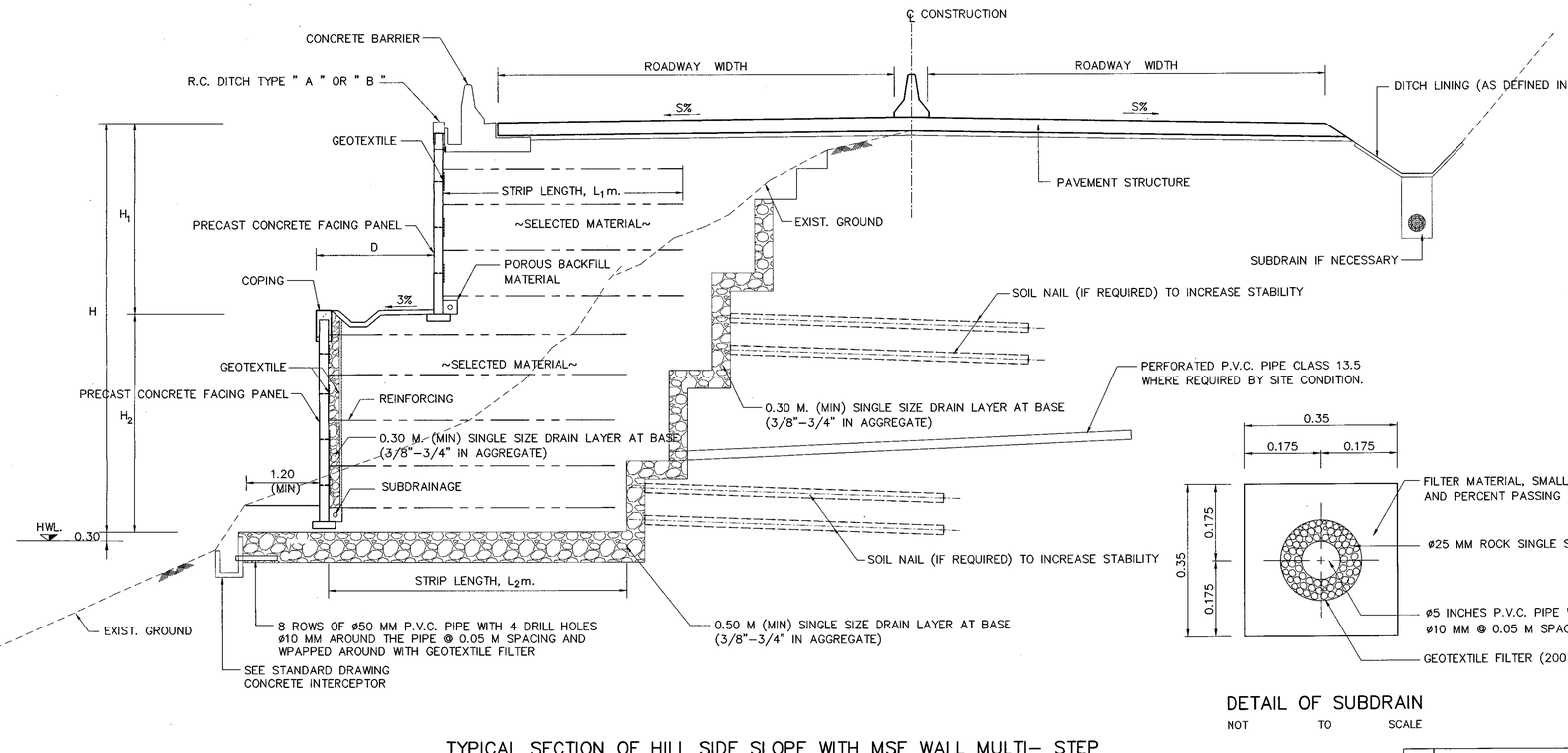

TYPICAL SECTION OF HILL SIDE SLOPE WITH MSE WALL MULTI– STEP

SCALE 1:50

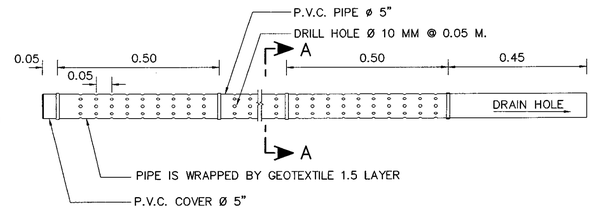

DETAIL OF HORIZONTAL DRAINAGE PIPE

SCALE 1:50

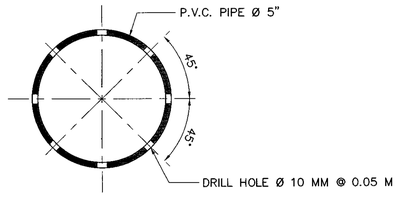

SECTION A – A

SCALE 1:3

DETAIL OF SUBDRAIN

NOT TO SCALE

KINGDOM OF THAILAND

MINISTRY OF TRANSPORT
DEPARTMENT OF HIGHWAYS

STANDARD DRAWING

MECHANICALLY STABALIZED EARTH WALL (MSE WALL)
TYPICAL SECTION OF MSE WALL FOR SIDE SLOPE

DESIGNED : D.O.H. & CONSULTANTS	CHECKED : BUREAU OF LOCATION & DESIGN	DATE : OCT 2015
SUBMITTED : (DIRECTOR OF LOCATION & DESIGN BUREAU)		SCALE : AS SHOWN
APPROVED : (FOR DIRECTOR GENERAL)		DWG NO. SP–508
		SHEET NO. 139

REF.	REVISION	SIGNATURE	DATE

D:\std dwg 2015\SP-508(REV00)

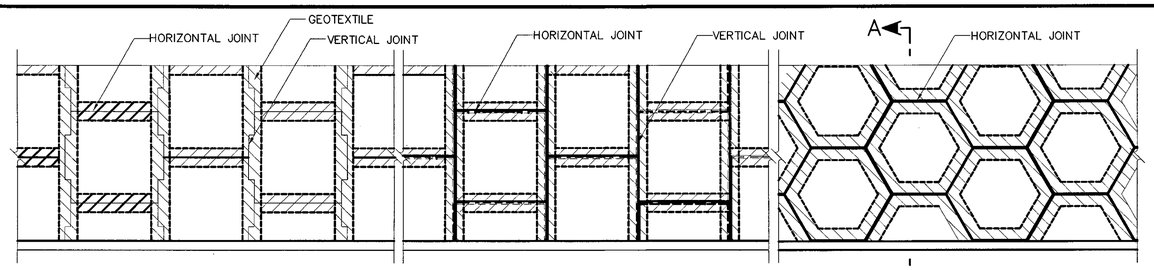

PERCAST CONCRETE FACING PANEL
SCALE 1:50

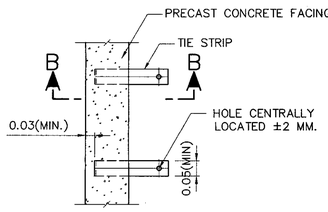

PLAN
SCALE 1:10

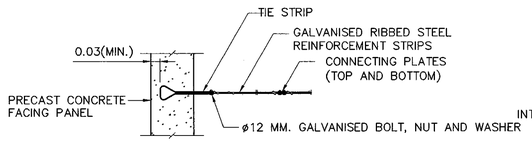

SECTION B–B
SCALE 1:10

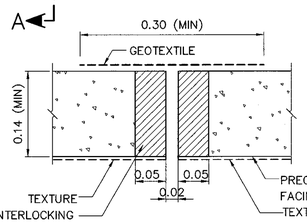

VERTICAL JOINT DETAIL
SCALE 1:5

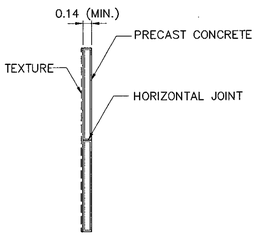

SECTION A–A
SCALE 1:50

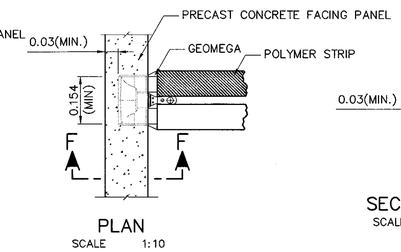

PLAN
SCALE 1:10

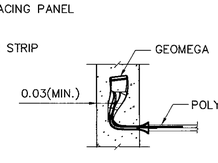

SECTION F – F
SCALE 1:10

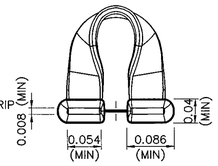

GEOMEGA
SCALE 1:5

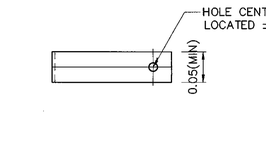

TIE STRIP
SCALE 1:5

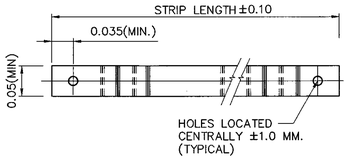

REINFORCING STRIP
SCALE 1:5

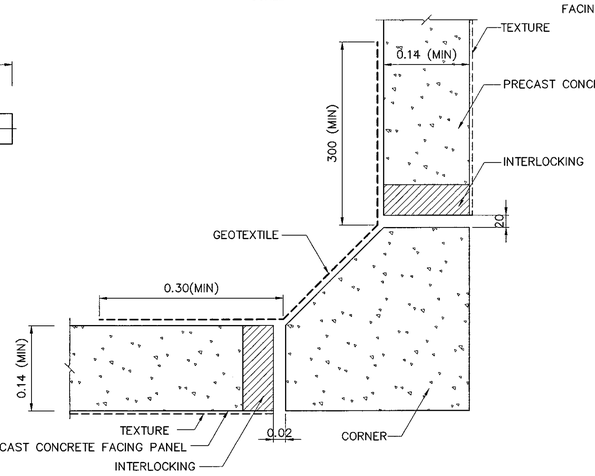

CORNER UNIT DETAIL
SCALE 1:5

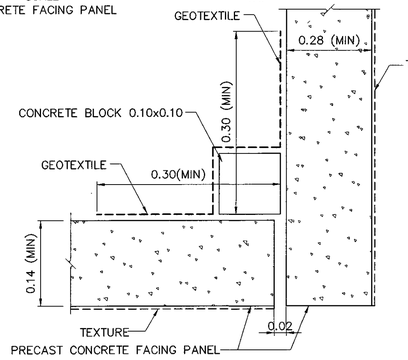

CORNER JOINT DETAIL
SCALE 1:5

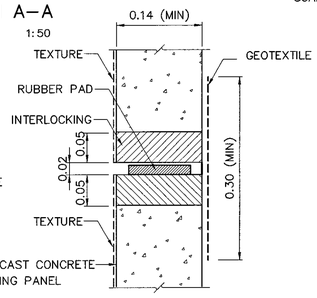

HORIZONTAL JOINT DETAIL
SCALE 1:5

WELDED FOR 0.04 M. LONG ON BOTH SIDES, ALLOWABLE SHEAR STRENGTH 1.6 AND 2.3 TON FOR ø 10 MM. AND ø 12 MM. RESPECTIVELY

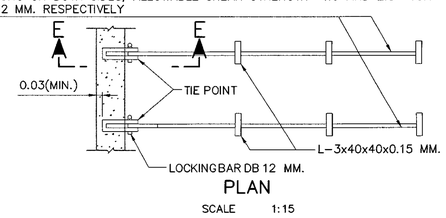

PLAN
SCALE 1:15

WELDED FOR 0.04 M. LONG ON BOTH SIDES, ALLOWABLE SHEAR STRENGTH 1.6 AND 2.3 TON FOR ø 10 MM. AND ø 12 MM.RESPECTIVELY

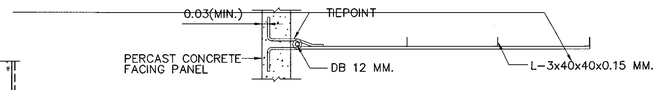

SECTION E – E
SCALE 1:15

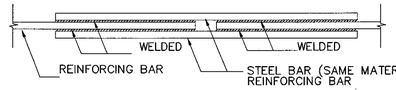

CONNECTION POINT
SCALE 1:15

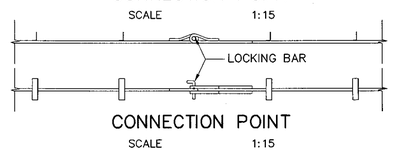

CONNECTION POINT
SCALE 1:15

REINFORCING BAR CONNECTOR DETAIL

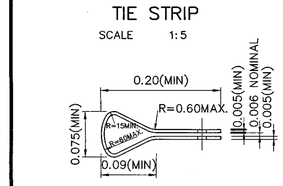

ELEVATION
TIE STRIP

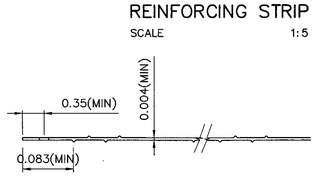

ELEVATION
REINFORCING STRIP

STEEL STRIP CONNECTOR DETAIL
SCALE 1:5

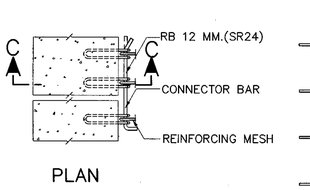

PLAN
SCALE 1:10

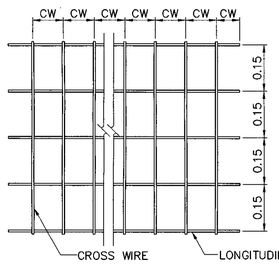

REINFORCING MESH DETAIL

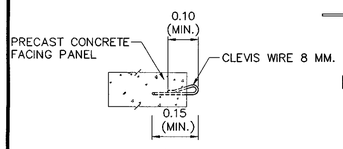

SECTION C – C
SCALE 1:10

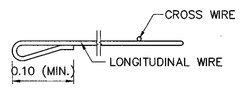

WIRE MESH LOOP DETAIL
SCALE 1:10

REINFORCING MESH CONNECTOR DETAIL

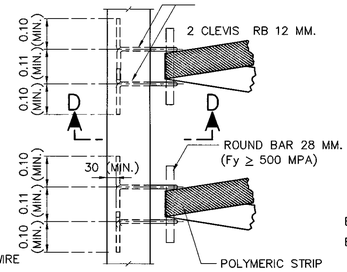

PLAN
SCALE 1:10

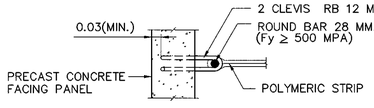

SECTION D – D
SCALE 1:10

POLYMERIC STRIP CONNECTOR DETAIL

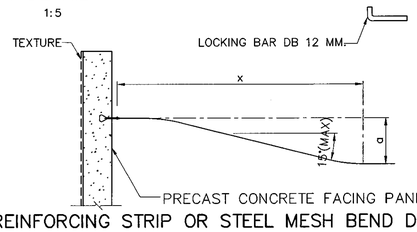

REINFORCING STRIP OR STEEL MESH BEND DETAIL
SCALE 1:15

BEND DOWN REINFORCING FOR ADDITIONAL OVERBURDEN OR OBSTRUCTION EXTEND SPECIFIED BACKFILL ABOVE PROPOSED FOR ELEMENT ATTACHMENT.

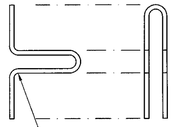

TIE POINT
SCALE 1:5

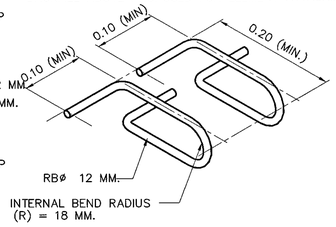

CLEVIS
SCALE 1:5

DISTANCE (a)	DISTANCE (X)
0.075 M.	0.675 M.
0.15 M.	0.975 M.
0.225 M.	1.20 M.
0.30 M.	1.50 M.
0.375 M.	1.80 M.

REMARK :

1. ALL DIMENSIONS SHOWN ARE IN METERS, UNLESS OTHERWISE INDICATED.
2. PRECAST CONCRETE PANELS ARE DESIGNED TO RESIST THE HORIZONTAL FORCE HAVING A MINIMUM THICKNESS OF 0.14 M. INCLUDE CRUCIFORM, SQUARE, RECTANGULAR, DIAMOND, HEXAGONAL OR DESIGNED SHAPES.
3. REINFORCEMENT IS PROVIDED TO RESIST THE AVERAGE LOADING CONDITIONS AT EACH DEPTH IN ACCORDANCE WITH STRUCTURAL DESIGN REQUIREMENT IN SECTION 8, OF AASHTO.
4. THE PANEL SIZE SHALL BE NO LARGER THAN 4.5 SQ.M..
5. THE EMBEDMENT OF THE SOIL REINFORCEMENT TO PANEL CONNECTOR MUST BE DEVELOPED BY TEST, TO ENSURE THAT IT CAN RESIST THE DESIGN Tmax FORCES.
6. AS A MINIMUM, TEMPERATURE AND SHRINKAGE STEEL MUST BE PROVIDED FOR SEGMENTAL PRECAST FACING. EPOXY PROTECTION OF PANEL REINFORCEMENT WHERE SALT SPRAY IS ANTICIPATED IS RECOMMEND.
7. SEE 3.1–3.3 IN DWG. NO. SP–511 TO SP–512 , SPECIAL PROVISIONS FOR PANELS, SOIL REINFORCING, ATTACHMENT DEVICES AND JOINT MATERIAL
8. RECOMMENCED LENGTH OF REINFORCING SEE DWG. NO. SP–514
9. REINFORCING SHALL BE INDUSTRIAL PRODUCTS AND SHALL NOT BE BUILT UP AT SITE
10. CW ARE SPACING FOR CROSS WIRES OF REINFORCING MESH, SEE DWG. NO. SP–514
11. IF ANY PART OF JOINT HAS DIMENSIONS AND/OR SHAPE DIFFERENT FROM THE DETAILS SHOWN IN THIS DRAWING, DESIGN CALCULATIONS SHALL BE SUBMITTED PRIOR TO PRIOR TO COMMENCEMENT OF WORK.
12. ALL REINFORCING MATERIALS SHALL BE PRODUCED BY CERTIFIED FACTORY WITH MANUFACTURING STANDARDS SUCH AS ISO, AND SHALL BE TESTED IN A RECOGNIZED ORGANIZATION OR INSTITUTE.
13. FACING SHOWN IN THIS DRAWING IS FOR EXAMPLE ONLY.
14. BY THE APPROVAL OF THE ENGINEER, THE CONTRACTOR MAY USE THE SHOTCRETE SYSTEM IN APPLYING MORTAR.

KINGDOM OF THAILAND

MINISTRY OF TRANSPORT
DEPARTMENT OF HIGHWAYS

STANDARD DRAWING

MECHANICALLY STABALIZED EARTH WALL (MSE WALL)
DETAILS OF FACING PANEL AND REINFORCING DETAILS

DESIGNED : D.O.H. & CONSULTANTS	**CHECKED :** BUREAU OF LOCATION DESIGN	**DATE :** OCT 2015
SUBMITTED :	(DIRECTOR OF LOCATION & DESIGN BUREAU)	**SCALE :** AS SHOWN
APPROVED :	(FOR DIRECTOR GENERAL)	**DWG NO.** SP–509
		SHEET NO. 140

REF.	REVISION	SIGNATURE	DATE

D:\std dwg 2015\SP-509(REV00)

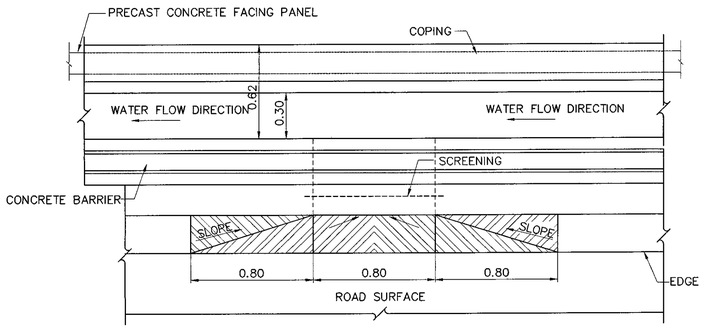

TYPICAL CONCRETE BARRIER AND DRAINAGE TYPE A PLAN

SCALE 1:20

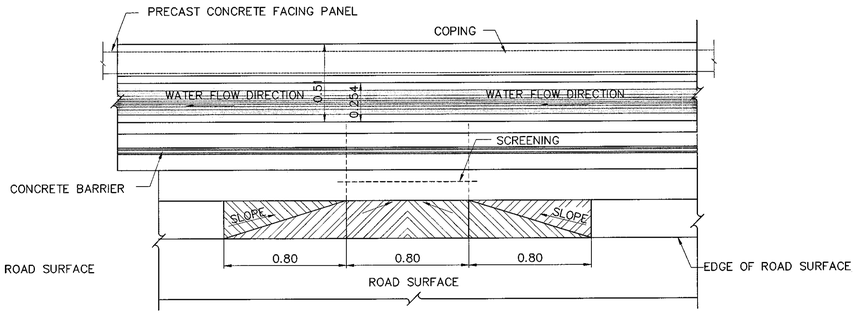

TYPICAL CONCRETE BARRIER AND DRAINAGE TYPE B PLAN

SCALE 1:20

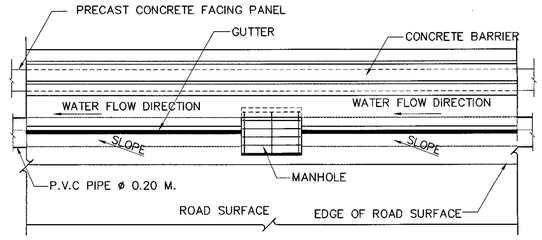

TYPICAL CONCRETE BARRIER AND DRAINAGE TYPE C PLAN

SCALE 1:20

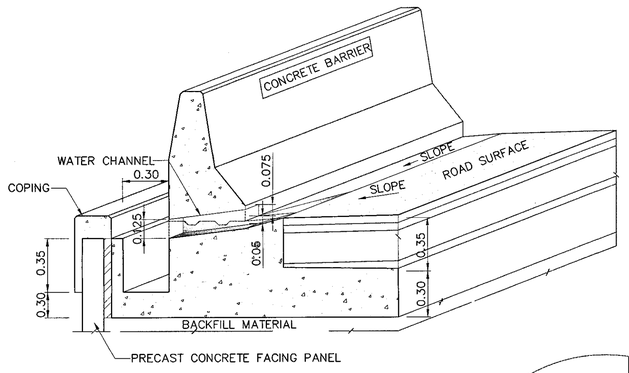

ISOMETRIC VIEW

OF CONCRETE BARRIER AND DRAINAGE TYPE A

SCALE 1:20

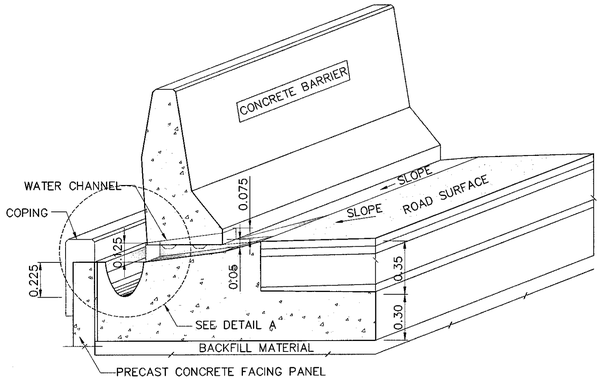

ISOMETRIC VIEW

OF CONCRETE BARRIER AND DRAINAGE TYPE B

SCALE 1:20

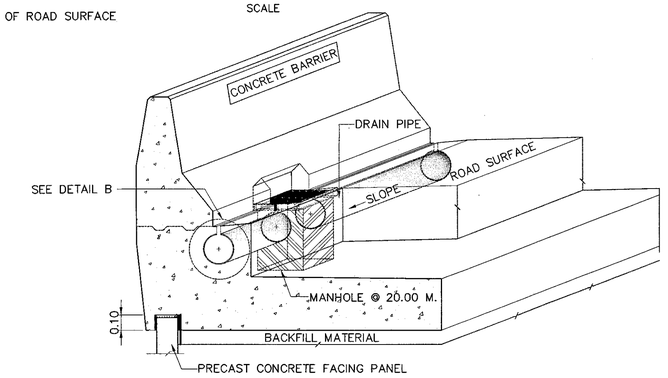

ISOMETRIC VIEW

OF CONCRETE BARRIER AND DRAINAGE TYPE C

SCALE 1:20

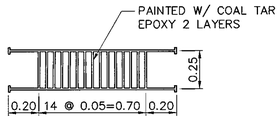

DETAIL OF SCREENING

SCALE 1:20

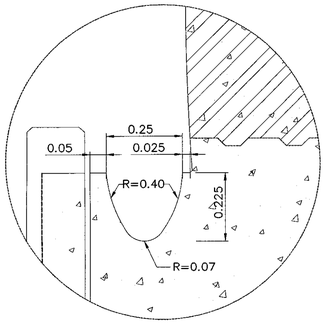

DETAIL A

SCALE 1:10

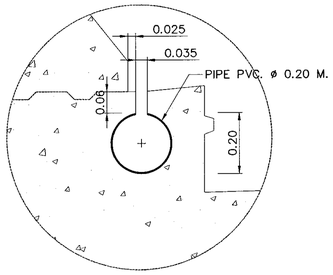

DETAIL B

SCALE 1:10

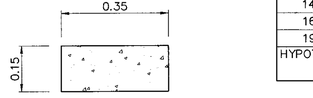

DETAIL OF CONCRETE BASE

SCALE 1:10

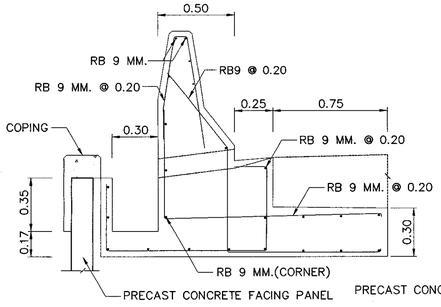

DETAIL OF STEEL REINFORCEMENT

FOR TYPICAL CONCRETE BARRIER AND DRAINAGE TYPE A

SCALE 1:20

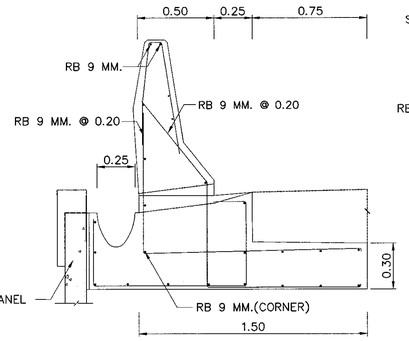

DETAIL OF STEEL REINFORCEMENT

FOR TYPICAL CONCRETE BARRIER AND DRAINAGE TYPE B

SCALE 1:20

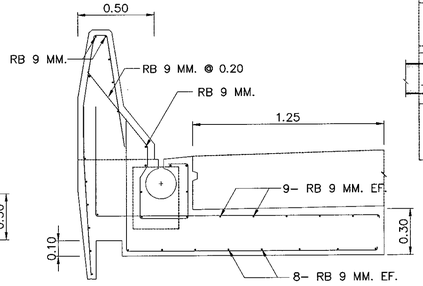

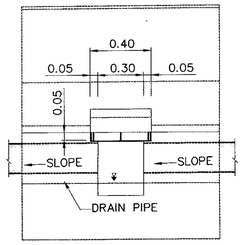

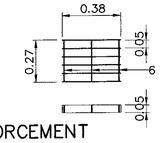

DETAIL OF STEEL REINFORCEMENT

FOR TYPICAL CONCRETE BARRIER AND DRAINAGE TYPE C

SCALE 1:20

DRAINAGE RECOMMENTDATION

ROADWAY WIDTH (M.)	MAXIMUM LENGTH OF DRAINGE WITH SLOPE OF 2–5% (M.)																	
	TYPE–A (W=0.30 M)						TYPE–B (W=0.25 M)						TYPE–C (D=0.20 M)					
	0.2%	1%	2%	3%	4%	5%	0.6%	1%	2%	3%	4%	5%	0.4%	1%	2%	3%	4%	5%
7	160	357	505	619	715	799	58	75	106	130	150	168	52	83	117	144	166	186
9	124	278	393	481	556	622	45	58	83	101	117	131	41	65	91	112	129	144
11	102	227	322	394	455	509	37	48	68	83	96	107	33	53	75	91	106	118
12	93	208	295	361	417	466	34	44	62	76	88	98	31	48	68	84	97	108
14	80	179	253	310	357	400	29	38	53	65	75	84	26	41	59	72	83	93
16	70	156	221	271	313	350	25	33	47	57	66	74	23	36	51	63	73	81
19	59	132	186	228	263	294	21	28	39	48	55	62	19	31	43	53	61	68
HYPOTHESIS F.S.=1.5, C=0.80, RAINFALL INTENSITY 200 MM./HR.																		

REMARK :

1. ALL DIMENSIONS ARE IN METERS UNLESS OTHERWISE INDICATED.
2. ULTIMATE COMPRESSIVE STRENGTH OF CONCRETE BARRIER AND DRAINAGE TYPE A AND TYPE B SHALL NOT BE LESS THAN 250 KSC. FOR 15x15x15 CM. CUBE AT 28 DAYS.
3. STEEL REINFORCEMENT SHALL CONFORM TO TIS.20 GRADE SR.24.
4. STRUCTURAL STEEL SHALL CONFORM TO TIS.116 GRADE FE 30.
5. STEEL PLATE SHALL CONFORM TO TIS.55 GRADE SR 24.
6. STRUCTURAL STEEL AND STEEL PLATE SHALL BE PAINTED WITH RUST–PROOF PAINT OR EQUIVALENT IN TWO LAYERS.
7. OVERLAP LENGTH OF STEEL REINFORCEMENT SHALL NOT BE LESS THAN 40 TIME OF STEEL DIAMETERS.
8. CONCRETE COVERING SHALL NOT BE LESS THAN 0.03 M.
9. PERFORATED P.V.C. PIPE HOLE WITH 0.01 M DIAMETER @0.15 M SPACING CLASS 13.5 WITH 0.10 M. DIAMETER WRAPPED AROUND WITH 1.5 LAYERS OF GEOTEXTILE SHALL BE USED FOR SUBDRAINAGE. THE ARRANGEMENT OF SUBDRAINAGE PIPE SHALL BE IN ACCORDANCE WITH THE DRAWINGS.
10. SEE SUBDRAINAGE SYSTEM IN DWG. NO. SP–508.
11. HDPE PIPE TYPE PN.8 WITH DIAMETER OF 200 MM AND SCREENING SHALL BE INSTALLED ACCORDING TO "DRAINAGE RECOMMENDATION TABLE". THE END OF HDPE PIPE SHALL BE LOCATED OUTSIDE THE WALL WITH A SAFE DISTANT FROM EROSION, AND EROSION PROTECTION AT THE DRAIN CHUTE SHALL BE MADE.

KINGDOM OF THAILAND

MINISTRY OF TRANSPORT

DEPARTMENT OF HIGHWAYS

STANDARD DRAWING

MECHANICALLY STABALIZED EARTH WALL (MSE WALL)
DETAILS OF DRAINAGE AND BARRIER

REF.	REVISION	SIGNATURE	DATE

DESIGNED : D.O.H. & CONSULTANTS	CHECKED : BUREAU OF LOCATION & DESIGN	DATE : OCT 2015
SUBMITTED : (DIRECTOR OF LOCATION & DESIGN BUREAU)		SCALE : AS SHOWN
APPROVED : (FOR DIRECTOR GENERAL)		DWG NO. SP–510
		SHEET NO. 141

D:\std dwg 2015\SP-510(REV00)

SPECIAL PROVISIONS FOR MSE WALL CONSTRUCTION AND REINFORCING PROPERTIES

1. DESCRIPTION

THIS WORK SHALL CONSIST OF MECHANICALLY STABILIZED WALLS AND ABUTMENTS CONSTRUCTED IN ACCORDANCE WITH THESE SPECIFICATIONS IN REASONABLY CLOSE CONFORMITY WITH THE LINES, GRADES, AND DIMENSIONS SHOWN ON THE PLANS OR ESTABLISHED BY THE ENGINEER. DESIGN DETAILS FOR THESE STRUCTURES SUCH AS SPECIFIED STRIP OR MESH LENGTH, CONCRETE PANEL THICKNESS, AND LOADING APPURTENANCES SHALL BE AS SHOWN ON THE PLANS. THIS SPECIFICATION IS INTENDED TO COVER ALL STEEL STRIP OR MESH STABILIZED EARTH WALL SYSTEMS UTILIZING DISCRETE CONCRETE FACE PANELS, SOME OF WHICH MAY BE PROPRIETARY.

2. WORKING DRAWINGS

WORKING DRAWINGS AND DESIGN CALCULATIONS SHALL BE SUBMITTED TO THE ENGINEER FOR REVIEW AND APPROVAL AT LEAST 3 MONTHS BEFORE WORK IS TO BEGIN.

WORKING DRAWINGS AND DESIGN CALCULATIONS SHALL INCLUDE THE FOLLOWING:

(1) EXISTING GROUND ELEVATIONS THAT HAVE BEEN VERIFIED BY THE CONTRACTOR FOR EACH LOCATION INVOLVING CONSTRUCTION WHOLLY OR PARTIALLY IN ORIGINAL GROUND.
(2) LAYOUT OF WALL THAT WILL EFFECTIVELY RETAIN THE EARTH BUT NOT LESS IN HEIGHT OR LENGTH THAN THAT SHOWN FOR THE WALL SYSTEM IN THE PLANS.
(3) COMPLETE DESIGN CALCULATIONS SUBSTANTIATING THAT THE PROPOSED DESIGN SATISFIES THE DESIGN PARAMETERS IN THE PLANS AND IN THE SPECIAL PROVISIONS.
(4) COMPLETE DETAILS OF ALL ELEMENTS REQUIRED FOR THE PROPER CONSTRUCTION OF THE SYSTEM, INCLUDING COMPLETE MATERIAL SPECIFICATIONS.
(5) DETAILS OF EARTHWORK REQUIREMENTS INCLUDING SPECIFICATIONS FOR MATERIAL AND COMPACTION OF BACK FILL.
(6) DETAILS OF REVISIONS OR ADDITIONS TO DRAINAGE SYSTEMS OR OTHER FACILITIES REQUIRED TO ACCOMMODATE THE SYSTEM.
(7) OTHER INFORMATION REQUIRED IN THE PLANS OR SPECIAL PROVISIONS OR REQUESTED BY THE ENGINEER.

THE CONTRACTOR SHALL NOT START WORK ON ANY EARTH RETAINING SYSTEM FOR WHICH WORKING DRAWINGS ARE REQUIRED UNTIL SUCH DRAWINGS HAVE BEEN APPROVED BY THE ENGINEER. APPROVAL OF THE CONTRACTOR'S WORKING DRAWINGS SHALL NOT RELIEVE THE CONTRACTOR OF ANY OF HIS RESPONSIBILITY UNDER THE CONTRACT FOR THE SUCCESSFUL COMPLETION OF THE WORK.

3. MATERIALS

GENERAL. THE CONTRACTOR SHALL MAKE ARRANGEMENTS TO PURCHASE OR MANUFACTURE THE FACING ELEMENTS, REINFORCING STRIPS OR MESH, ATTACHMENT DEVICES, JOINT FILLER, AND ALL OTHER NECESSARY COMPONENTS. MATERIALS NOT CONFORMING TO THIS SECTION OF THE SPECIFICATIONS OR FROM SOURCES NOT LISTED IN THE CONTRACT DOCUMENT SHALL NOT BE USED WITHOUT WRITTEN CONSENT FROM THE ENGINEER.

3.1 REINFORCED CONCRETE FACING PANELS

THE PANELS SHALL BE FABRICATED IN ACCORDANCE WITH SECTION 8.13 OF AASHTO, 2002, DIVISION II, WITH THE FOLLOWING EXCEPTIONS AND ADDITIONS.

(1) THE PORTLAND CEMENT CONCRETE SHALL CONFORM TO CLASS A, (AE) WITH A MINIMUM 28 MPA (280 KSC) COMPRESSIVE STRENGTH AT 28 DAYS.
(2) THE UNITS SHALL BE FULLY SUPPORTED UNTIL THE CONCRETE REACHES A MINIMUM COMPRESSIVE STRENGTH OF 7 MPA. THE UNITS MAY BE SHIPPED AFTER REACHING A MINIMUM COMPRESSIVE STRENGTH OF 24 MPA. AT THE OPTION OF THE CONTRACTOR, THE UNITS MAY BE INSTALLED AFTER THE CONCRETE REACHES A MINIMUM COMPRESSIVE STRENGTH OF 24 MPA.
(3) UNLESS OTHERWISE INDICATED ON THE PLANS OR ELSEWHERE IN THE SPECIFICATION, THE CONCRETE SURFACE FOR THE FRONT FACE SHALL HAVE A CLASS 1 FINISH AS DEFINED BY SECTION 8.12 OF AASHTO, 2002, DIVISION II AND FOR THE REAR FACE A UNIFORM SURFACE FINISH. THE REAR FACE OF THE PANEL SHALL BE SCREENED TO ELIMINATE OPEN POCKETS OF AGGREGATE AND SURFACE DISTORTIONS IN EXCESS OF 6 MM. THE PANELS SHALL BE CAST ON A FLAT AREA. THE STRIPS OR OTHER GALVANIZED ATTACHMENT DEVICES SHALL NOT CONTACT OR BE ATTACHED TO THE FACE PANEL REINFORCEMENT STEEL.
(4) THE PANEL SIZE SHALL BE NO LARGER THAN 4.5 SQ.M.
(5) MARKING – THE DATE OF MANUFACTURE, THE PRODUCTION LOT NUMBER, AND THE PIECE MARK SHALL BE CLEARLY SCRIBED ON AN UNEXPOSED FACE OF EACH PANEL.
(6) HANDLING, STORAGE, AND SHIPPING – ALL UNITS SHALL BE HANDLED, STORED, AND SHIPPED IN SUCH A MANNER AS TO ELIMINATE THE DANGERS OF CHIPPING, DISCOLORATION, CRACKS, FRACTURES, AND EXCESSIVE BENDING STRESSES. PANELS IN STORAGE SHALL BE SUPPORTED IN FIRM BLOCKING TO PROTECT THE PANEL CONNECTION DEVICES AND THE EXPOSED EXTERIOR FINISH.
(7) TOLERANCES – ALL UNITS SHALL BE MANUFACTURED WITHIN THE FOLLOWING TOLERANCES:
  – PANEL DIMENSIONS – POSITION PANEL CONNECTION DEVICES WITHIN 25 MM , EXCEPT FOR ALL OTHER DIMENSIONS WITHIN 5 MM.
  – PANEL SQUARENESS – SQUARENESS AS DETERMINED BY THE DIFFERENCE BETWEEN THE TWO DIAGONALS SHALL NOT EXCEED 13 MM.
  – PANEL SURFACE FINISH – SURFACE DEFECTS ON SMOOTH FORMED SURFACES MEASURED OVER A LENGTH OF 1.5 M SHALL NOT EXCEED 3 MM.
  SURFACE DEFECTS ON THE TEXTURED–FINISH SURFACES MEASURED OVER A LENGTH OF 1.5 M SHALL NOT EXCEED 8 MM.
(8) STEEL – IN ACCORDANCE WITH SECTION 9 OF AASHTO, 2002, DIVISION II.
(9) COMPRESSIVE STRENGTH – ACCEPTANCE OF CONCRETE PANELS WITH RESPECT TO COMPRESSIVE STRENGTH WILL BE DETERMINED ON THE BASIS OF PRODUCTION LOTS.

A PRODUCTION LOT IS DEFINED AS A GROUP OF PANELS THAT WILL BE REPRESENTED BY A SINGLE COMPRESSIVE STRENGTH SAMPLE AND WILL CONSIST OF EITHER 40 PANELS OR A SINGLE DAY'S PRODUCTION, WHICHEVER IS LESS.

DURING THE PRODUCTION OF THE CONCRETE PANELS, THE MANUFACTURER WILL RANDOMLY SAMPLE THE CONCRETE IN ACCORDANCE WITH AASHTO T–141. A SINGLE COMPRESSIVE STRENGTH SAMPLE, CONSISTING OF A MINIMUM OF FOUR CYLINDERS, WILL BE RANDOMLY SELECTED FOR EVERY PRODUCTION LOT.

COMPRESSION TESTS SHALL BE MADE ON A STANDARD 152 MM BY 305 MM TEST SPECIMEN PREPARED IN ACCORDANCE WITH AASHTO T–23. COMPRESSIVE STRENGTH TESTING SHALL BE CONDUCTED IN ACCORDANCE WITH AASHTO T–23.

THE SLUMP TEST WILL BE PERFORMED IN ACCORDANCE WITH AASHTO T–119. THE SLUMP WILL BE DETERMINED AT THE BEGINNING OF EACH DAY'S PRODUCTION AND AT THE SAME TIME AS THE COMPRESSIVE STRENGTH SAMPLES ARE TAKEN.

FOR EVERY COMPRESSIVE STRENGTH SAMPLE, A MINIMUM OF TWO CYLINDERS SHALL BE CURED IN ACCORDANCE WITH AASHTO T–23 AND TESTED AT 28 DAYS. THE AVERAGE COMPRESSIVE STRENGTH OF THESE CYLINDERS, WHEN TESTED IN ACCORDANCE WITH AASHTO T–22, WILL PROVIDE A COMPRESSIVE STRENGTH TEST RESULT THAT WILL DETERMINE THE COMPRESSIVE STRENGTH OF THE PRODUCTION LOT.

IF THE CONTRACTOR WISHES TO REMOVE FORMS OR SHIP THE PANELS PRIOR TO 28 DAYS, A MINIMUM OF TWO ADDITIONAL CYLINDERS WILL BE CURED IN THE SAME MANNER AS THE PANELS. THE AVERAGE COMPRESSIVE STRENGTH OF THESE CYLINDERS WHEN TESTED IN ACCORDANCE WITH AASHTO T–22 WILL DETERMINE WHETHER THE FORMS CAN BE REMOVED OR THE PANELS SHIPPED. ACCEPTANCE OF A PRODUCTION LOT WILL BE MADE IF THE COMPRESSIVE STRENGTH TEST RESULT IS GREATER THAN OR EQUAL TO 27.6 MPA. IF THE COMPRESSIVE STRENGTH TEST RESULT IS LESS THAN 28 MPA (280 KSC), THEN ACCEPTANCE OF THE PRODUCTION LOT WILL BE BASED ON ITS MEETING THE FOLLOWING ACCEPTANCE CRITERIA IN THEIR ENTIRETY:

– NINETY PERCENT OF THE COMPRESSIVE STRENGTH TEST RESULTS FOR THE OVERALL PRODUCTION SHALL EXCEED 29 MPA (290 KSC)
– THE AVERAGE OF ANY SIX CONSECUTIVE COMPRESSIVE STRENGTH TEST RESULTS SHALL EXCEED 30 MPA (300 KSC)
– NO INDIVIDUAL COMPRESSIVE STRENGTH TEST RESULT SHALL FALL BELOW 25 MPA (250 KSC)

UNITS SHALL BE REJECTED BECAUSE OF FAILURE TO MEET ANY OF THE REQUIREMENTS SPECIFIED ABOVE. IN ADDITION, ANY OR ALL OF THE FOLLOWING DEFECTS SHALL BE SUFFICIENT CAUSE FOR REJECTION:

– DEFECTS THAT INDICATE IMPERFECT MOLDING.
– DEFECTS INDICATING HONEYCOMBING OR OPEN TEXTURE CONCRETE.
– CRACKED OR SEVERELY CHIPPED PANELS.
– COLOR VARIATION ON FRONT FACE OF PANEL DUE TO EXCESS FORM OIL OR OTHER REASONS.

3.2 REINFORCING MATERIAL AND ATTACHMENT DEVICES.

ALL REINFORCING AND ATTACHMENT DEVICES SHALL BE CAREFULLY INSPECTED TO ENSURE THEY ARE TRUE TO SIZE AND FREE FROM DEFECTS THAT MAY IMPAIR THEIR STRENGTH AND DURABILITY.

INEXTENSIBLE MATERIAL
REINFORCING STRIPS

(1) REINFORCING STRIPS SHALL BE HOT ROLLED FROM BARS TO THE REQUIRED SHAPE AND DIMENSIONS AS SHOWN IN SHOP DRAWIMG.
THEIR PHYSICAL AND MECHANICAL PROPERTIES SHALL CONFORM TO ASTM A–572 GRADE 65.
GALVANIZATION SHALL CONFORM TO ASTM A–123 OR AASHTO M–111 OR EQUIVALENT.
REINFORCING STRIP HAS BEEN PRODUCED HIGH–NORMAL FRICTION BETWEEN MATERIAL AND SOIL. APPARENT COEFFICIENT OF FRICTION SHALL BE DERIVED AS FOLLOWING PROVISIONS:
– AT TOP OF REINFORCING SOIL
  $F^* = \tan R = 1.2 + \log Cu$ (IN CASE OF F^* IS HIGHER THAN 2, USE EQUAL 2)
– AT DEPTH FROM 6 M.
  WHERE, R = FRICTION FORCE BETWEEN REINFORCING MATERIAL AND REINFORCING SOIL
  ϕ = INTERNAL FRICTION ANGLE OF REINFORCING BACKFILL
  Cu = COEFFICIENT OF UNIFORMLY DISTRIBUTED REINFORCING BACKFILL
(2) TIE STRIPS SHALL BE HOT–DIP GALVANIZED GRADE 250, OR EQUIVALENT.
(3) BOLT AND NUT WILL BE M12 AND EQUIVALENT STRENGTH GRADE 8.8 IN ACCORDANCE WITH BS 3692, OR EQUIVALENT.
INCLUDING HOT–DIP GALVANIZED, OR EQUIVALENT PROTECTIVE SUBSTANCES.
(4) AS DRAWINGS, BOTH VERTICAL AND HORIZONTAL JOINTS WILL BE COVERED BY GEOTEXTILE OR POLYURETHENE FOAM, OR EQUIVALENT.

REINFORCING MESH

(1) REINFORCING MESH SHALL BE PRODUCED CONFORMING TO ASTM A–82 OR AASHTO M–32 AND SHALL BE WELDED IN ACCORDANCE WITH ASTM A–185 OR AASHTO M–55.
(2) YIELD STRENGTH OF REINFORCING MESH SHALL BE 550 MPA, EQUAL TO 264 MPA FOR WORKING DESIGN.
CROSS–SECTION AREA OF REINFORCING MESH SHALL BE REDUCED 0.71 MM. FROM MEASURED SURFACE AREA. (REDUCED DIAMETER 1.42 MM. FOR DESIGNING)
(3) YIELD STRENGTH OF CREVIS SHALL BE 550 MPA AND WILL BE APPROPRIATE TO REINFORCING MESH.
(4) ALL DOWEL BAR SHALL BE GARDE SR24 AND HOT–DIP GALVANIZED.
(5) MINIMUM THICKNESS OF GALVANIZATION SHALL BE 0.086 MM. (600 G/SQ.CM.) AS IN ACCORDANCE WITH ASTM A–123 OR AASHTO M–111.

REINFORCING BAR

(1) LONGITUDINAL REINFORCING BAR SHALL BE FABRICATED OF DEFORMED STEEL BAR OR EQUIVALENT.
PHYSICAL AND MECHANICAL PROPERTIES SHALL CONFORM TO TIS 1227–2539 OR JIS G 3192 . THE LONGITUDINAL AND TRANSVERSE MEMBERS SHALL BE STRONGLY WELDED TOGETHER CONFORMING TO AWS B 2.1 : 2005. GALVANIZATION SHALL BE APPLIED AFTER WELDING AND SHALL CONFORM TO ASTM A–123 OR AASHTO M–111. MINIMUM YIELD STRENGTH OF 400 MPA IS REQUIRED.
(2) TIE STRIP USED TO DOWEL SHALL BE 9 MM. AND YIELD STRENGTH SHALL NOT BE LESS THAN 240 MPA.
(3) AS DRAWINGS, BOTH VERTICAL AND HORIZONTAL JOINTS WILL BE COVERED BY GEOSYNTHETIC OR POLYURETHENE FOAM, OR EQUIVALENT.

EXTENSIBLE MATERIAL
POLYMERIC STRIP

(1) ALL UNITS SHALL BE STORED, SHIPPED, HANDLED AND CORRECTLY INSTALLED ACCORDING TO SPECIFICATION OF MANUFACTURER, INCLUDING SHALL NOT BE DAMAGED DURING INSTALLATION AND COMPACTION.
VEHICLES SHALL NOT BE ALLOWED TO MOBILIZE ON POLYMERIC STRIP WHEN TOP SOIL IS LESS THAN 0.10 M. THICK.
(2) POLYMERIC STRIP SHALL BE PRODUCED FROM POLYESTER YARN AND COATED BY POLYETHYLENE SHEATH.
ENGINEERING PROPERTIES HAS BEEN SHOWN IN DRAWING NO. MSE–12(T). MATERIAL COATED POLYESTER SHALL BE PRODUCED BY DIE EXTRUSION PROCESS AND POLYMERIC TIE AND GRADE SHALL NOT BE LESS THAN 25 KN OR SPECIFIED IN WORKING DRAWINGS.

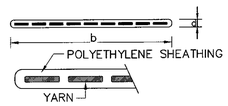

POLYMERIC STRIP SHALL BE DELIVERED IN ROLL. PRODUCTION LOTS SHALL BE CLEARLY ATTACHED GRADE, LENGTH PER ROLL AND DATE OF MANUFACTURED. STORAGE, SHIPPING AND HANDLING SHALL BE WRAPPED AND PLACED IN CLEAN AND DRY AREA.
(3) ATTACHMENT ROOP/CREVISES SHALL BE ROUND BAR AND YIELD STRENGTH AT LEAST 240 MPA (2400 KSC).
(4) TOGGLE BAR SHALL BE ROUND BAR AND YIELD STRENGTH AT LEAST 240 MPA (2400 KSC).
(5) MATERIAL AS ABOVE MENTIONED IN SECTIONS (3) AND (4) SHALL BE HOT–DIP GALVANIZED AT LEAST 0.086 MM. OR 86 MICRON (610 G./SQ.M.) IN ACCORDANCE WITH ASTM A–123. STORAGE, SHIPPING AND HANDLING SHALL BE WRAPPED AND PLACED IN CLEAN AND DRY AREA.
(6) UNIT WEIGHT OF GEOTEXTILE FILTER CLOTH USED TO COVER BOTH VERTICAL AND HORIZONTAL JOINTS, AND PERFORATED P.V.C. PIPE SHALL BE 200 G/SQ.M.
(7) BEARING RUBBLE PAD OF CONCRETE FACING PANEL SHALL BE PRODUCED FROM POLYETHELENE RESIN, HIGH DENSITY AND UV PROTECTION IN ACCORDANCE WITH ASTM D–1505. IN ACCORDANCE WITH ASTM A–123. STORAGE, SHIPPING AND HANDLING SHALL BE WRAPPED AND PLACED IN CLEAN AND DRY AREA.
UNIT WEIGHT SHALL NOT BE LESS THAN 0.946 G./SQ.CM. OR HARDNESS IS EQUAL TO 80±5 IN ACCORDANCE WITH IRDH (INTERNATIONAL RUBBLE DEGREE OF HARDNESS) AND DIMENSION IS 0.10 X 0.08 X 0.02 M.

REF.	REVISION	SIGNATURE	DATE

KINGDOM OF THAILAND
MINISTRY OF TRANSPORT
DEPARTMENT OF HIGHWAYS

STANDARD DRAWING
MECHANICALLY STABALIZED EARTH WALL (MSE WALL)
SPECIAL PROVISIONS FOR MSE WALL CONSTRUCTION AND REINFORCING PROPERTIES (SHEET 1 OF 3)

DESIGNED : D.O.H. & CONSULTANTS	CHECKED : BUREAU OF LOCATION & DESIGN	DATE : OCT 2015
SUBMITTED : (DIRECTOR OF LOCATION & DESIGN BUREAU)		SCALE : AS SHOWN
APPROVED : (FOR DIRECTOR GENERAL)		DWG NO. SP–511
		SHEET NO. 142

D:\std dwg 2015\SP–511(REV00)

SPECIAL PROVISIONS FOR MSE WALL CONSTRUCTION AND REINFORCING PROPERTIES

ENGINEERING PROPERTIES OF REINFORCING METERIAL

REINFORCING STRIPS

TYPE OF REINFORCING MATERIAL	SPACING OF REINFORCING MATERIAL (MM.)	Fy/Fu (MPA)	ELONGATION (%)	SPACING IN VERTICAL (MM.)	SPACING IN HORIZONTAL (MM.)
STRIP	725	450/520	15 – 17	750	300 TO 750

REINFORCING MESH

DIAMETER OF STRAND (SQ.MM.)	AREA OF STRAND (SQ.MM.)	Fy/Fu (MPA)	ELONGATION (%)	SPACING OF LONGITUDINAL STRAND (MM.)	SPACING OF TRANSVERSE STRAND (MM.)	SPACING OF MESH PAD (MM.)
8	50.3	540/610	8	GENERALLY, USE 150 MM. AND USE 4 TO 8 LONGITUDINAL STRAND/PIECE	150 TO 600	750
9	63.6					
10	78.5					
11	95.0					

REINFORCING BAR

DIAMETER OF STEEL IN LONGITUDINAL (SQ.MM.)	SIZE OF STEEL IN TRANSVERSE (SQ.MM.)	Fy/Fu (MPA)		ELONGATION (%)	SPACING IN IN LONGITUDINAL (MM.)	SPACING IN IN TRANVERSE (MM.)
		LONGITUDINAL STEEL (MM.)	TRANSVERSE STEEL (MM.)	LONGITUDINAL STEEL (MM.)		
10	40X150 – 40X180	390/560	245/400	15	180–750	500–1000
12	28X150 – 28X180					

POLYMERIC STRIP

WIDTH OF PIECE (MM.)	ULTIMATE STRENGTH (KN.)	ELONGATION (%)	SPACING IN VERTICAL (MM.)	SPACING IN HORIZONTAL (MM.)
70–90	30	15	350–750	460–1450
	50			
	70			

3.3 JOINT MATERIALS

INSTALLED TO THE DIMENSIONS AND THICKNESSES IN ACCORDANCE WITH THE PLANS OR APPROVED SHOP DRAWINGS.

(1) IF REQUIRED, PROVIDE FLEXIBLE FOAM STRIPS FOR FILLER FOR VERTICAL JOINTS BETWEEN PANELS, AND IN HORIZONTAL JOINTS WHERE PADS ARE USED, WHERE INDICATED ON THE PLANS.

(2) PROVIDE IN HORIZONTAL JOINTS BETWEEN PANELS PREFORMED EPOM RUBBER PADS CONFORMING TO ASTM D–2000 FOR 4AA, 812 RUBBERS, NEOPRENE ELASTOMERIC PADS HAVING A DUROMETER HARDNESS OF 55 ±5, OR HIGH DENSITY POLYETHYLENE PADS WITH A MINIMUM DENSITY OF 0.946 G/CU.CM. IN ACCORDANCE WITH ASTM 1505.

(3) COVER ALL JOINTS BETWEEN PANELS ON THE BACK SIDE OF THE WALL WITH A GEOTEXTILE MEETING THE MINIMUM REQUIREMENTS FOR FILTRATION APPLICATIONS AS SPECIFIED BY AASHTO M–288. THE MINIMUM WIDTH AND LAP SHALL NOT BE LESS THAN 300 MM.

(4) TIE STRIPS SHALL BE PRODUCED CONFORMING TO ASTM 570 GRADE 50 OR EQUIVALENT. GALVANIZATION SHALL BE IN ACCORDANCE WITH ASTM A–123 (AASHTO M–111).

(5) FASTENERS SHALL CONSIST OF HEXAGONAL CAP SCREW BOLTS AND NUTS HAVING GALVANIZATION IN ACCORDANCE WITH ASTM A–325 (AASHTO M–164) OR EQUIVALENT.

(6) CONNECTOR PINS SHALL PRODUCED ACCORDANCE WITH A–36 AND CONNECTED TO REINFORCING SOIL MATERIALS AS DEFINED IN SHOP DRAWING. GALVANIZATION SHALL BE IN ACCORDANCE WITH ASTM A–123 (AASHTO M–111. CONNECTOR BARS SHALL BE PRODUCED CONFORMING TO ASTM A–82 (AASHTO M–32) HAVING GALVANIZATION IN ACCORDANCE WITH ASTM A–123 (AASHTO M–111)

3.4 REINFORCING BACKFILL

ALL MATERIAL ADOPTED TO REINFORCING BACKFILL SHALL BE TESTED AND CERTIFICATED IN LABORATORY BEFORE USING. SOURCES SHALL BE APPROVED BY DEPARTMENT OF HIGHWAY. AND BETWEEN 3 TO 10 EXCEPT OTHERWISE DEFINED, REINFORCING BACKFILL MATERIAL SHALL CONFORM TO THE FOLLOWING SPECIFICATIONS:

(1) THE LIQUID LIMIT (L.L.) AS DETERMINED BY DH–T 102 TESTING SHALL NOT EXCEED 30 PERCENT.

(2) THE PLASTICITY INDEX (P.I.) AS DETERMINED BY DH–T 103 TESTING SHALL NOT EXCEED 6.

(3) THE COEFFICIENT OF UNIFORMITY (Cu) SHALL EXCEED 4.

(4) THE pH INDICATOR AS DETERMINED BY AASHTO T–289: "DETERMINING pH OF SOIL FOR USE IN CORROSION" SHALL BE BETWEEN 5 TO 10 FOR BACKFILL REINFORCED STEEL FOR BACKFILL REINFORCED SYNTHETIC MATERAIL.

(5) ORGANIC CONTENT AS DETERMINED BY AASHTO T–267: "DETERMINATION OF ORGANIC CONTENT IN SOILS BY LOSS ON IGNITION SHALL NOT EXCEED 1.0 PERCENT BY MASS.

(6) INTERNAL FRICTION ANGLE AS DETERMINED BY AASHTO T–236: "DIRECT SHEAR TEST OF SOILS UNDER CONSOLIDATED DRAINED CONDITIONS" PASSING NO. 10 SIEVE THE COMPACTED DENSITY SHALL BE NOT LESS THAN 95 PERCENT OF MAXIMUM DRY DENSITY AS DETERMINED BY DH–T 108 TESTING: "MODIFIED COMPACTION TEST" AND EXCEED 32 DEGREE.

(7) PARTICLE SIZE OF REINFORCING BACKFILL MATERIAL SHALL BE DETERMINED BY DH–T 205: ""WET SIEVE ANALYSIS" AND ITS GRADATION SHALL CONFORM TO TABLE 1.

TABLE 1 PARTICLE SIZE DISTRIBUTION FOR REINFORCING BACKFILL MATERAIL*

TYPE OF REINFORCING MATERIAL	PERCENT PASSING (%) SIEVE SIZE					
	37 MM. (1 1/2 INCH)	18.75 MM. (3/4 INCH)	4.75 MM. (NO. 4)	0.425 MM. (NO. 40)	0.150 MM. (NO. 100)	0.075 MM. (NO. 200)
INEXTENSIBLE REINFORCEMENT	100	–	30–100	15–100	5–65	0–15
EXTENSIBLE REINFORCEMENT	–	100	30–100	15–100	5–65	0–15

REMARKS

GRADED PARTICLE SIZE OF REINFORCING BACKFILL MAY BE CHANGED WHICH DEPENDED ON THE PURPOSE OF ENGINEER AS DEFINED IN SHOP DRAWING.

IF REVISED SHALL BE APPROVED BY DEPARTMENT OF HIGHWAY.

IN CASE STEEL USED TO REINFORCING OR STEEL PIPE PLACED IN REINFORCING BACKFILL, REINFORCING BACKFILL MATERIAL SHALL HAVE ELECTROCHEMICAL PROPERTIES AS FOLLOWING:

(8.1) ELECTRIC RESISTANCE AS DETERMINED BY AASHTO T–288: "STANDARD METHOD OF TEST FOR DETERMINING MINIMUM LABORATORY SOIL RESISTIVELY" SHALL NOT LESS THAN 3000 OHM.CM.

(8.2) SULFATE CONTENT AS DETERMINED BY AASHTO T–290: "STANDARD METHOD OF TEST FOR DETERMINING WATER–SOLUBLE SULFATE ION CONTENT IN SOIL" SHALL NOT EXCEED 200 PPM.

(8.3) CHLORIDE CONTENT AS DETERMINED BY AASHTO T–291: "STANDARD METHOD OF TEST FOR DETERMINING WATER–SOLUBLE CHLORIDE ION CONTENT IN SOIL" SHALL NOT EXCEED 100 PPM.

REMARK : IF ELECTRIC RESISTANCE OF REINFORCING BACKFILL MORE THAN/EQUAL 5000 OHM.CM., TESTING FOR DETERMINING SULFATE AND CHLORIDE IS NOT REQUIRED.

3.5 CONCRETE PAD

THE CONCRETE FOOTING SHALL CONFORM TO AASHTO FOR CLASS B CONCRETE. PORTLAND CEMENT CONTENT SHALL NOT BE LESS THAN 307 KG./SQ.M. THE WATER – CEMENT RATIO SHALL BE EQUAL TO 0.58. THE COMPRESSIVE STRENGTH SHALL NOT BE LESS THAN 17 MPA AND MINIMUM CURED DURATION SHALL BE 12 HOURS BEFORE WALL INSTALLED.

3.6 ACCEPTANCE OF MATERIAL

THE CONTRACTOR SHALL FURNISH THE ENGINEER A CERTIFICATE OF COMPLIANCE CERTIFYING THE ABOVE MATERIALS, COMPLY WITH THE APPLICABLE CONTRACT SPECIFICATIONS. A COPY OF ALL TEST RESULTS PERFORMED BY THE CONTRACTOR NECESSARY TO ASSURE CONTRACT COMPLIANCE SHALL BE FURNISHED TO THE ENGINEER. ACCEPTANCE WILL BE BASED ON THE CERTIFICATE OF COMPLIANCE, ACCOMPANYING TEST REPORTS, AND VISUAL INSPECTION BY THE ENGINEER, OR TESTS PERFORMED INDEPENDENTLY BY THE ENGINEER.

4. CONSTRUCTION

THE CONTRACTOR SHALL HAS INSPECTOR OR SPECIALIST TO ADVISE AND CONSULT IN THE MSE WALL CONSTRUCTION. THE PREPARATION OF REPORT IS REQUIRED DURING CONSTRUCTION.

4.1 WALL EXCAVATION

UNCLASSIFIED EXCAVATION SHALL BE IN ACCORDANCE WITH AASHTO DIVISION 11, SECTION 1 AND IN REASONABLY CLOSE CONFORMITY TO THE LIMITS AND CONSTRUCTION STAGES SHOWN ON THE PLANS. TEMPORARY EXCAVATION SUPPORT AS REQUIRED SHALL BE THE RESPONSIBILITY OF THE CONTRACTOR.

4.2 FOUNDATION PREPARATION

THE FOUNDATION FOR THE STRUCTURE SHALL BE GRADED LEVEL FOR A WIDTH EQUAL TO THE LENGTH OF REINFORCEMENT ELEMENTS OR AS SHOWN ON THE PLANS. PRIOR TO WALL CONSTRUCTION, EXCEPT WHERE CONSTRUCTED ON ROCK, THE FOUNDATION SHALL BE COMPACTED WITH A SMOOTH WHEEL VIBRATORY ROLLER. ANY FOUNDATION SOILS FOUND TO BE UNSUITABLE SHALL BE REMOVED AND REPLACED WITH SELECT BACKFILL AS MATERIALS OF THESE SPECIFICATIONS. THE BEARING CAPACITY TESTING IS REQUIRED BEFORE CONSTRUCTION.

4.3 WALL ERECTION

WHERE A PROPRIETARY WALL SYSTEM IS USED, A FIELD REPRESENTATIVE SHALL BE AVAILABLE DURING THE ERECTION OF THE WALL TO ASSIST THE FABRICATOR, CONTRACTOR, AND ENGINEER. PRECAST CONCRETE PANELS SHALL BE PLACED SO THAT THEIR FINAL POSITION IS VERTICAL OR OBLIQUE AS SHOWN ON THE PLANS. FOR ERECTION, PANELS ARE HANDLED BY MEANS OF LIFTING DEVICES CONNECTED TO THE UPPER EDGE OF THE PANEL. PANELS SHOULD BE PLACED IN SUCCESSIVE HORIZONTAL LIFTS IN THE SEQUENCE SHOWN ON THE PLANS AS BACKFILL PLACEMENT PROCEEDS.

THE PANELS SHALL BE MAINTAINED IN POSITION ACCORDING TO THE WALL SUPPLIER'S RECOMMENDATIONS.

CONCRETE FACING VERTICAL TOLERANCES AND HORIZONTAL ALIGNMENT TOLERANCES SHALL NOT EXCEED 20 MM. WHEN MEASURED WITH A 3 M. MEASURE STICK.

DURING CONSTRUCTION, THE MAXIMUM ALLOWABLE OFFSET IN ANY PANEL JOINT SHALL BE 20 MM. THE COMPLETED WALL SHALL HAVE OVERALL VERTICAL TOLERANCE SHALL NOT EXCEED 13 MM PER 3 M OF WALL HEIGHT. REINFORCEMENT MATERIAL SHALL BE PLACED NORMAL TO THE FACE OF THE WALL, UNLESS OTHERWISE SHOWN ON THE PLANS. PRIOR TO PLACEMENT OF THE REINFORCING MATERAIL, BACKFILL SHALL BE COMPACTED IN ACCORDANCE WITH THESE SPECIFICATIONS.

4.4 SOIL BEARING CAPACITY TEST

THE CONTRACTOR SHALL PERFORM SOIL BEARING CAPACITY TEST AS DETERMINED BY ASTM 1194–94 EVERY 75 M. PER WIDTH OF 1 TRAFFIC LANE. TESTED RESULTS SHALL NOT BE LESS THAN DESIGN BEARING CAPACITY AS DEFINED IN SHOP DRAWING NO. SP–514. THE CONTRACTOR SHALL SUBMIT THE LOCATION OF SOIL BEARING CAPACITY TESTING TO ENGINEER FOR APPROVING BEFORE TESTING.

4.5 BACKFILL PLACEMENT

BACKFILL PLACEMENT SHALL CLOSELY FOLLOW ERECTION OF EACH COURSE OF PANELS. BACKFILL SHALL BE PLACED IN SUCH A MANNER AS TO AVOID ANY DAMAGE OR DISTURBANCE OF THE WALL MATERIALS OR MISALIGNMENT OF THE FACING PANELS OR REINFORCING ELEMENT. ANY WALL MATERIALS THAT BECOME DAMAGED DURING BACKFILL PLACEMENT SHALL BE REMOVED AND REPLACED AT THE CONTRACTOR'S EXPENSE. ANY MISALIGNMENT OR DISTORTION OF THE WALL FACING PANELS DUE TO PLACEMENT OF BACKFILL OUTSIDE THE LIMITS OF THIS SPECIFICATION SHALL BE CORRECTED AT THE CONTRACTOR'S EXPENSE. AT EACH REINFORCEMENT LEVEL, THE BACKFILL SHALL BE PLACED AND COMPACTED TO THE LEVEL OF THE CONNECTION. BACKFILL PLACEMENT METHODS NEAR THE FACING SHALL ASSURE THAT NO VOIDS EXIST DIRECTLY BENEATH THE REINFORCING ELEMENTS.

BACKFILL USED TO CONSTRUCT MSE WALL SHALL BE IN ACCORDANCE WITH DH–S 105/2550 AND SHALL BE COMPACTED TO 95 PERCENT OF THE MAXIMUM DENSITY AS DETERMINED BY DH–T 108 OR AASHTO T–99, METHOD C OR D (WITH OVERSIZE CORRECTIONS AS OUTLINED IN NOTE 7 OF THAT TEST). FOR BACKFILLS CONTAINING MORE THAN 30 PERCENT RETAINED ON THE 19 MM SIEVE, A METHOD COMPACTION CONSISTING OF AT LEAST FOUR PASSES BY A HEAVY ROLLER SHALL BE USED. FOR APPLICATIONS WHERE SPREAD FOOTINGS ARE USED TO SUPPORT BRIDGE OR OTHER STRUCTURAL LOADS, THE TOP 1.5 M BELOW THE FOOTING ELEVATION SHOULD BE COMPACTED TO 100 PERCENT AS AASHTO T–99. THE MOISTURE CONTENT OF THE BACKFILL MATERIAL PRIOR TO AND DURING COMPACTION SHALL BE UNIFORMLY DISTRIBUTED THROUGHOUT EACH LAYER. BACKFILL MATERIALS SHALL BE A MOISTURE CONTENT LESS THAN +/–2 PERCENT OF OPTIMUM MOISTURE CONTENT. BACKFILL MATERIAL WITH A MOISTURE CONTENT EXCESS OF THE OPTIMUM MOISTURE CONTENT SHALL BE REMOVED AND REWORKED UNTIL THE MOISTURE CONTENT IS UNIFORMLY ACCEPTABLE THROUGHOUT THE ENTIRE LIFT. THE MAXIMUM LIFT THICKNESS BEFORE COMPACTION SHALL NOT EXCEED 200 MM. THE CONTRACTOR SHALL DECREASE THIS LIFT THICKNESS, IF NECESSARY, TO OBTAIN THE SPECIFIED DENSITY. COMPACTION WITHIN 1 M. OF THE BACK FACE OF THE WALL SHALL DECREASE LIFT THICKNESS NOT EXCEED 100 MM. AND SHALL BE COMPACTED BY A LIGHTWEIGHT MECHANICAL TAMPER ROLLER, OR VIBRATORY SYSTEM AT LEAST THREE PASSES PER LIFT THICKNESS AND DENSITY SHALL NOT BE LESS THAN 90 PERCENT OF THE MAXIMUM DENSITY. MACHINE DO NOT ALLOW TO OPERATE DIRECTLY ON REINFORCING MATERIAL. IN ORDER TO PREVENT REINFORCING MATERIAL DAMAGE, SELECTED MATERIAL SHOULD BE PLACED AT LEAST 150 MM BEFORE MACHINE HAS BEEN OPERATED ON REINFORCEMENT MATERIAL. AT THE END OF EACH DAY'S OPERATION, THE CONTRACTOR SHALL SLOPE THE LEVEL OF THE BACKFILL AWAY FROM THE WALL FACING TO RAPIDLY DIRECT RUNOFF AWAY FROM THE FACE. THE CONTRACTOR SHALL NOT ALLOW SURFACE RUNOFF FROM ADJACENT AREAS TO ENTER THE WALL CONSTRUCTION SITE.

4.6 TOLERANCE

EXCEPT OTHERWISE AGREED BY THE ENGINEER, THE TOLERANCE OF THE PRECAST CONCRETE FACING PANEL PLACEMENT SHALL BE AS THE FOLLOWING :

- DURING CONSTRUCTION, VERTICAL ALIGMENT TOLERANCES AND HORIZONTAL ALIGNMENT TOLERANCES SHALL NOT EXCEED 25 MM. PER ALONG LENGTH OF 4.5 M.
- THE MAXIMUM ALLOWABLE OFFSET IN ANY PANEL JOINT SHALL BE 15 MM.
- THE OVERALL VERTICAL TOLERANCE OF THE WALL (PLUMBNEES FROM TOP TO BOTTOM) SHALL NOT EXCEED 15 MM. PER 3,000 MM. OF WALL HEIGHT.
- THE VERTICAL TOLERANCE WITH REGARD TO R.L.S SHOWN ON THE PLANS SHALL BE THE LESSER OF +50 MM. AT ANY POINT OR +15 MM. PER 3 M. OF WALL HEIGHT.

TOLERANCE OF CONCRETE SURFACE LEVELING SHALL NOT EXCEED +/–0.05 M.

CONCRETE FACING PANEL

EXCEPT OTHERWISE IN SHOP DRAWING, WALL SHALL NOT DEVIATE OUTSIDE EXCEEDING 0.025 M. OF FACING AT EVERY 3 M. OF WALL LENGTH AFTER FINISHING CONSTRUCTION.

THE VERTICAL AND HORIZONTAL TOLERANCE SHALL NOT EXCEED +/–0.05 M. WHEN COMPARED WITH SHOP DRAWING.

REF.	REVISION	SIGNATURE	DATE

KINGDOM OF THAILAND
MINISTRY OF TRANSPORT
DEPARTMENT OF HIGHWAYS

STANDARD DRAWING
MECHANICALLY STABALIZED EARTH WALL (MSE WALL)
SPECIAL PROVISIONS FOR MSE WALL CONSTRUCTION AND REINFORCING PROPERTIES (SHEET 2 OF 3)

DESIGNED : D.O.H. & CONSULTANTS	CHECKED : BUREAU OF LOCATION & DESIGN	DATE : OCT 2015
SUBMITTED :	(DIRECTOR OF LOCATION & DESIGN BUREAU)	SCALE : AS SHOWN
APPROVED :	(FOR DIRECTOR GENERAL)	DWG NO. SP–512
		SHEET NO. 143

D:\std dwg 2015\SP-512(REV00)

SPECIAL PROVISIONS FOR MSE WALL CONSTRUCTION AND REINFORCING PROPERTIES

4.7 DRAINAGE

1. THE SUBDRAINAGE PIPE SHALL HARD P.V.C PIPE CLASS 13.5 AND 0.10 M. DIAMETER OR EQUIVALENT OF P.V.C PIPE WITH 4 NO. OF 10 MM. DIAMETER CONCENTRIC HOLES STAGGERED 0.15 M. SPACING LONGITUDINALLY AND WRAPED AROUND WITH 1.5 LAYERS OF GEOTEXTILE FABRIC. LAYERING OF THE SUBDRAINAGE PIPE SHALL BE IN ACCORDANCE WITH THE LEVELS DESIGNED ON THE DRAWINGS.
2. GEOTEXTILE FOR WRAPPING AROUND DRAINAGE PIPE AND FILTERING MATERIALS BEHIND CONCRETE WALL SHALL BE PRODUCED FROM POLYESTER OR POLYPROPYLENE. THE ENGINEERING PROPERTIES ARE GIVEN IN TABLE 2

TABLE 2 PROPERTIES OF NON-WOVEN GEOTEXTILE

PROPERTIES	STANDARD	UNIT	NON-WOVEN GEOTEXTILE
WEIGHT	ISO 9864	GRAM/SQ.M.	$\geqslant$ 200
CROSS-PLANE PERMEABILITY AT 50 MM. HEAD	ISO 11058	LITER/SQ.M./S	$\geqslant$ 85
APPARENT OPENING SIZE, 095	ASTM D4751	MM.	$\leqslant$ 0.2
CRB PUNCTURE	ISO 12236	N	$\geqslant$ 2200

3. FILTER MATERIAL SHALL BE SINGLE SIZED GRAVEL WITH 25 MM. DIAMETER AND SHOULD BE FREE FROM SOIL OR DUST WHICH MIGHT PLUG DRAINGE PIPE. GEOTEXTILE SHOULD BE PLACED PRIOR TO PLACEMENT OF THE FILTER MATERIAL.
4. DURING CONSTRUCTION OF REINFORCED SOIL STRUCTURE, TEMPORARY DRAINAGE SHALL BE CONSTRUCTED TO DIVERT ANY SURFACE RUNOFF AWAY FROM THE STRUCTURES. AT THE END OF EACH DAY, SHALL SLOPE THE LEVEL OF THE BACKFILL AWAY FROM BEHIND THE WALL TO ALLOW RUNOFF INTO THE TEMPORARY DRAINAGE.

5. MEASUREMENT

5.1 WALL MATERIALS

THE UNIT OF MEASUREMENT FOR FURNISHING AND FABRICATING ALL MATERIALS FOR THE WALLS, INCLUDING FACING MATERIALS, REINFORCEMENT ELEMENTS, ATTACHMENT DEVICES, JOINT MATERIALS, AND INCIDENTS WILL BE THE SQUARE METER OF WALL FACE CONSTRUCTED WALL ERECTION.

5.2 WALL ERECTION

THE UNIT OF MEASUREMENT FOR WALL ERECTION WILL BE PER SQUARE METER OF WALL FACE. THE QUANTITY TO BE PAID FOR WILL BE THE ACTUAL QUANTITY ERECTED IN PLACE AT THE SITE. PAYMENT SHALL INCLUDE COMPENSATION FOR FOUNDATION PREPARATION, TECHNICAL REPRESENTATIVES, REINFORCEMENT ELEMENTS, AND ERECTION OF THE PANEL ELEMENTS TO THE LINES AND GRADE SHOWN ON THE PLANS.

5.3 CONCRETE LEVELING PAD

THE UNIT OF MEASUREMENT FOR THE CONCRETE LEVELING PAD WILL BE THE NUMBER OF LINER METERS, COMPLETE IN PLACE AND ACCEPTED, MEASURED ALONG THE LINES AND GRADE OF THE FOOTING.

5.4 REINFORCED BACKFILL AND SELECTED BACKFILL

THE UNIT OF MEASUREMENT FOR BACKFILL WILL BE THE EMBANKMENT PLAN QUANTITY IN CUBIC METERS.

6. PAYMENT

THE QUANTITIES, DETERMINED AS DESCRIBED IN SECTION 5, WILL BE PAID FOR AT THE CONTRACT PRICE PER UNIT OF MEASUREMENT, RESPECTIVELY, FOR EACH PAY ITEM LISTED BELOW AND SHOWN IN THE BID SCHEDULE, WHICH PRICES AND PAYMENT WILL BE FULL COMPENSATION FOR THE WORK PRESCRIBED IN THE SECTION, EXCEPT AS PROVIDED BELOW: EXCAVATION OF UNSUITABLE FOUNDATION MATERIALS WILL BE MEASURED AND PAID FOR AS PROVIDED IN ASSHTO 2002 DIVISION 11, SECTION I. SELECT BACKFILL FOR REPLACEMENT OF UNSUITABLE FOUNDATION MATERIALS WILL BE PAID FOR UNDER ITEM (4).

PAYMENT WILL BE MADE UNDER:

PAY ITEM	PAY UNIT
1. MSE WALL	SQUARE METER
2. CONCRETE LEVELING PAD	METER
3. REINFORCED BACKFILL AND SELECT BACKFILL	CUBIC METER
4. COPING BARRIERS	METER
5. CONCRETE BARRIERS	METER

CONSTRUCTION PROCESS

1. FOR SITE PREPARATION, ELEVATION AND WIDTH OF AREA OF CONCRETE PAD SHALL BE INSPECTED.
2. THE WIDTH, LENGTH AND ELEVATION OF FORMWORK OF CONCRETE PAD SHALL BE INSPECTED.
3. MSE WALL ALIGNMENT SHALL BE LOCATED.
4. DRAINAGE SYSTEM SHALL BE INSTALLED AS SHOWN IN THE DRAWING.
5. BEARING CAPACITY OF SOIL FOUNDATION SHALL BE TESTED.
6. THE INSTALLATION SHALL BE STARTED FROM THE BOTTOMMOST, PLACING FULL AND HAFT CONCRETE FACING WITH STACKING PATTERN AS SHOWN IN THE DRAWING. ADJUST ALIGNMENT AND ELEVATION OF WALL AS SHOWN IN THE DRAWING. SUFFICIENT BRACING IS REQUIRED TO MAKE CONCRETE PANEL STABLE.
7. ALIGNMENT AND ELEVATION SHALL BE INSPECTED.
8. SPONGE OR GEOTEXTILE FILTER CLOTH SHALL BE REQUIRED TO COVER THE JOINTS TO PREVENT LEAKAGE OF BACKFILL MATERIALS INSIDE THE WALL.
9. FIRST BACKFILL AND COMPACTED SOIL LAYER SHALL BE PLACED UNDER FIRST REINFORCING STRIPS.
10. REINFORCING STEEL BAR SHALL BE INSTALLED BY FIXING TIE STRIP WITH BOLT BEHIND THE CONCRETE WALL.
11. COMPACTED LAYER SHALL BE INSPECTED AND APPROVED BY SUPERVISOR BEFORE MOVING TO NEXT LAYER.
12. GEOTEXTILE AND COMPACT BACKFILL MATERIALS SHALL BE PLACED IN FIRST LAYER/BOTTOM LAYER UP TO THE TOP OF HAFT CONCRETE FACING. BACKFILL MATERIAL SHALL BE PLACED AWAY FROM WALL AT LEAST 1.5 M. THEN BACKFILL MATERIAL SHALL BE GRADED IN PARALLEL ALIGNMENT WITH THE WALL CAREFULLY.
13. BOTH SIDES OF FORMWORKS SHALL BE REMOVED AND PLACE A BEARING RUBBER PAD INTO THE GAP BETWEEN HALF SIZED PANELS.
14. THE FULL SIZED PANELS SHALL BE INSTALLED ON THE HALF SIZED PANELS.
15. ALIGNMENT AND LEVEL OF PANELS SHALL BE ADJUSTED IN ACCORDANCE WITH THE DRAWING.
16. BOTH SIDES OF FORMWORKS OF INSTALLED LEVEL SHALL BE REMOVED AND PLACE A BEARING RUBBER PAD INCLUDING INSTALL THE SPONGE OR PLUG THE JOINTS WITH GEOTEXTILE.
17. IN THE NEXT LAYER, THE BACKFILL MATERIAL SHALL BE COMPACTED UP TO INSTALLATION LEVEL OF REINFORCING STRIP.
18. REINFORCING STRIP SHALL BE INSTALLED IN SECOND LAYER.
19. INCLINATION AND LEVEL OF THE PANELS SHALL BE INSPECTED.
20. BACKFILL MATERIALS SHALL BE FILLED AND COMPACTED UNTIL REACH TO TOP PANELS.
21. FORMWORKS SHALL BE REMOVED FROM THE LOW CONCRETE PANEL LAYER.
22. ALL PROCESSES OF FILLING-COMPACTION AND INSTALLING OF REINFORCING MATERIAL AND CONCRETE PANEL SHALL BE REPEATED IN ACCORDANCE WITH THE DRAWING.
23. THE OTHER E.G. TRAFFIC IMPACT BARRIERS SHALL BE INSTALLED ACCORDING TO THE DRAWINGS UNTIL THE COMPLETION AS SPECIFIED IN THE DRAWING.

REMARK :

1. ALLOWABLE SOIL BEARING CAPACITY LOCATED IN AREA OF CONSTRUCTION OF MSE WALL SHOULD BE SUFFICIENT AS SPECIFIED IN DWG. NO. SP-514.
2. IF ALLOWABLE SOIL BEARING CAPACITY IS LESS THAN SPECIFIED VALUES IN DWG. NO. SP-514, CONTRACTORS SHALL IMPROVE THE SOIL TO INCREASE BEARING CAPACITY IN ACCORDANCE WITH DWG. NO. SP-514. SOIL IMPROVEMENT CAN BE ACHIEVED BY SEVERAL METHODS SUCH AS SOIL REPLACEMENT AND SOIL CEMENT STABILIZATION. PRIOR TO CONSTRUCTION OF THE MSE WALL, THE CONTRACTORS SHALL ANALYSE AND DESIGN IN ORDER TO CONFIRM THAT THE SOIL BEARING CAPACITY AFTER IMPROVEMENT MEETS THE SPECIFICATION.

REF.	REVISION	SIGNATURE	DATE

KINGDOM OF THAILAND
MINISTRY OF TRANSPORT
DEPARTMENT OF HIGHWAYS

STANDARD DRAWING
MECHANICALLY STABALIZED EARTH WALL (MSE WALL)
SPECIAL PROVISIONS FOR MSE WALL CONSTRUCTION AND REINFORCING PROPERTIES (SHEET 3 OF 3)

DESIGNED : D.O.H. & CONSULTANTS | CHECKED : BUREAU OF LOCATION & DESIGN | DATE : OCT 2015

SUBMITTED : (DIRECTOR OF LOCATION & DESIGN BUREAU) | SCALE : AS SHOWN

APPROVED : (FOR DIRECTOR GENERAL) | DWG NO. SP-513

SHEET NO. 144

D:\std dwg 2015\SP-513(REV00)

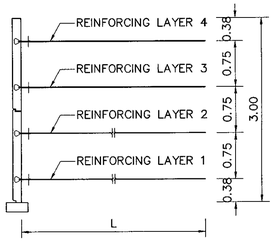

H=3.00 M.

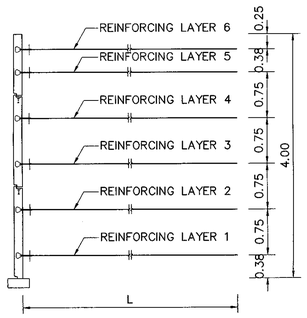

H=4.00 M.

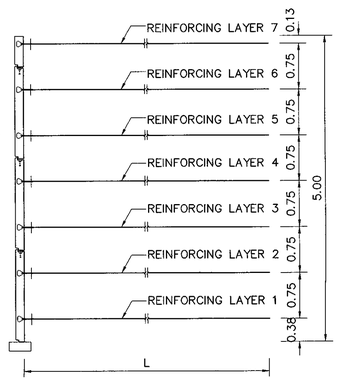

H=5.00 M.

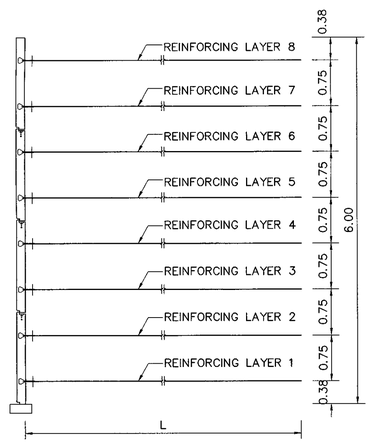

H=6.00 M.

TYPICAL NUMBER OF REINFORCING PER LAYER

SCALE 1:50

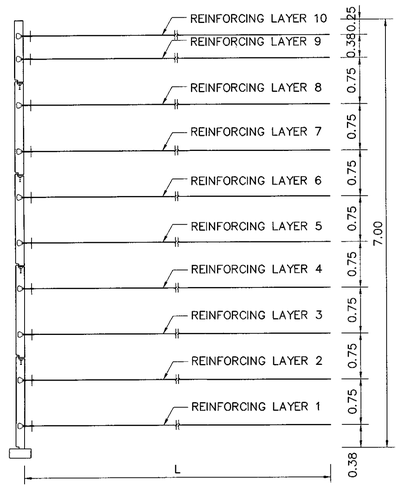

H=7.00 M.

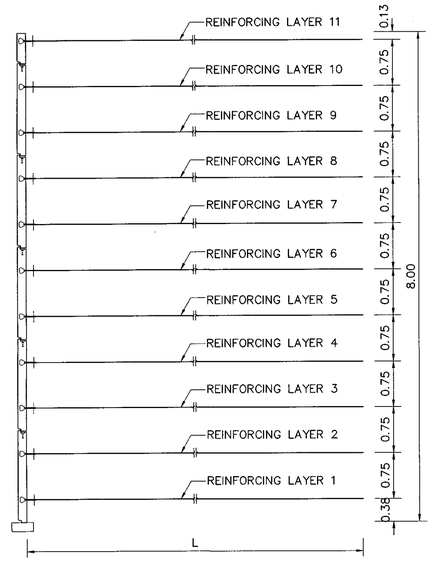

H=8.00 M.

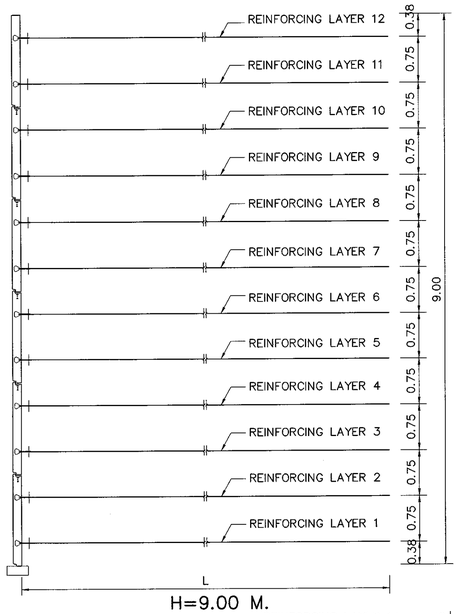

H=9.00 M.

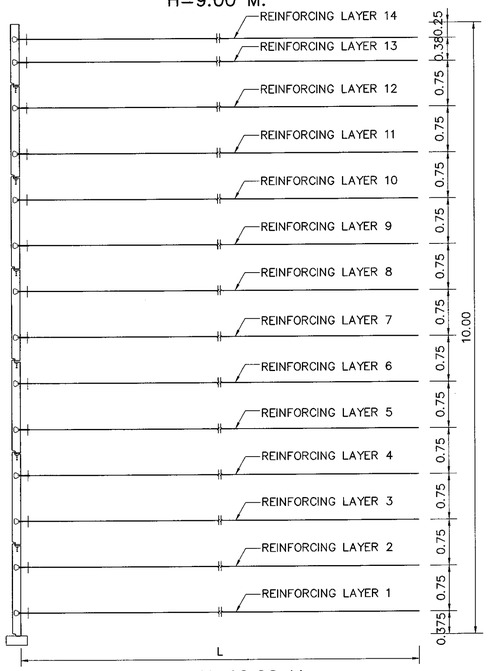

H=10.00 M.

NOTES :

1. ALL DIMENSIONS AND ELEVATIONS ARE IN METERS UNLESS OTHERWISE INDICATED.
2. THE NUMBER SHOWN IN THE TABLES ARE ONLY RECOMMENDATION THE CONTRACTOR SHALL SUBMIT COMPLETE DESIGN COMPUTATION TO THE ENGINEER FOR REVIEW AND APPROVAL BEFORE CONSTRUCTION.
3. REINFORCED SOIL MASS PROPERTIES (BRIDGE APPROACH)
   - INTERNAL FRICTION ANGLE= 32°
   - MINIMUM UNIT WEIGHT = 18 KN/M^3
   - MAXIMUM UNIT WEIGHT = 20 KN/M^3
4. RETAINED FILL PROPERTIES (MOUNTAIN AREA)
   - INTERNAL FRICTION ANGLE= 30°
   - UNIT WEIGHT =20 KN/M^3
5. SUPERIMPOSED LOAD =20 KN/M^2
6. DESIGN LIFE OF REINFORCING MATERIAL IS 75 YEARS.
7. DETAIL OF MSE PANEL AND SOIL REINFORCING ARE SHOWN IN DWG. NO. SP-509
8. BEARING CAPACITY OF SOIL FOUNDATION SHALL BE TESTED FOLLOWING ASTM 1194-94. FACTOR OF SAFETY IS 3.00 FOR DESIGN LOAD.
9. THIS STANDARD DRAWING SHALL APPLY WITH MSE WALL WHICH NOT HIGHER THAN 10 M. IF THE MSE WALL IS HIGHER THAN 10 M.,ITS SHALL BE DESIGNED BY THE SPECIALIST CASE BY CASE.

ABBREVIATIONS :

H = HEIGHT OF MSE WALL

L = LENGTH OF REINFROCING MATERIAL IN MSE WALL

LINEAR STRIPS

NUMBER OF STEEL STRIP / WIDTH 3.00 M.

H(m.)	L(m.)	REINFORCING LAYER NO. 14	13	12	11	10	9	8	7	6	5	4	3	2	1	ALLOWBLE BEARING CAPACITY (MIN) (KN/M^2)
3	5											4	4	6	6	100
4	5									4	4	4	5	5	5	120
5	5								4	4	4	4	4	5	5	140
6	5							4	4	4	4	5	6	6	6	180
7	6					4	4	4	4	4	4	5	6	6	6	200
8	6				4	4	4	4	4	4	5	6	6	7	7	240
9	7			4	4	4	4	4	4	4	5	5	6	6	7	260
10	7	4	4	4	4	4	4	4	4	5	6	6	6	7	8	300

REINFORCING MESH

NUMBER OF BAR (Fy=550 MPa) /WITH 1.32 M.

H(m.)	L(m.)	REINFORCING LAYER NO. 14	13	12	11	10	9	8	7	6	5	4	3	2	1	ALLOWBLE BEARING CAPACITY (MIN) (KN/M^2)
3	5											6	4	4	5	90
3.75	5										6	4	4	4	5	110
4.5	5									6	5	4	4	5	6	135
5.25	5								6	5	4	5	5	6	6	155
6	6							5	4	4	5	5	6	6	8	175
6.75	6						5	4	4	5	5	6	6	8	8	200
7.50	7					5	4	4	5	5	6	6	6	8	8	215
8.25	7				5	4	4	5	5	6	6	6	8	8	6	235
9	7			5	4	4	5	5	6	6	6	8	8	6	6	260
9.75	8		5	4	4	5	5	6	6	6	8	8	6	6	7	285
10.5	8	5	4	4	5	5	6	6	6	8	8	6	6	7	8	300

DIAMETER 8 MM. SPACING 150 M.M. FOR LONGITUDINAL WIRES AND 300 MM. FOR CROSS WIRES (CW)

DIAMETER 10 MM. SPACING 150 M.M. FOR LONGITUDINAL WIRES AND 450 MM. FOR CROSS WIRES (CW)

POLYMERIC STRIPS

NUMBER OF POLYMERIC STRIP / WIDTH 4.80 M.

H(m.)	L(m.)	REINFORCING LAYER NO. 14	13	12	11	10	9	8	7	6	5	4	3	2	1	ALLOWBLE BEARING CAPACITY (MIN) (KN/M^2)
3	4											5	4	5	5	90
3.75	4										6	4	5	5	6	110
4.5	5									6	4	5	5	6	4	130
5.25	5								6	4	5	5	6	4	5	150
6	6							6	4	5	5	6	4	5	5	170
6.75	6						5	4	5	5	6	4	5	5	6	190
7.50	6					6	4	5	5	6	4	5	5	6	6	220
8.25	7				6	4	5	5	6	4	5	5	6	6	6	240
9	7			6	4	5	5	6	4	5	5	6	6	6	5	260
9.75	8		6	4	5	5	6	4	5	5	6	6	6	5	5	280
10.5	8	5	4	5	5	6	4	5	5	6	6	6	5	5	6	300

WIDTH 85 MM., ULTIMATE STRENGTH 30 KN

WIDTH 85 MM., ULTIMATE STRENGTH 50 KN

WIDTH 85 MM., ULTIMATE STRENGTH 70 KN

KINGDOM OF THAILAND

MINISTRY OF TRANSPORT

DEPARTMENT OF HIGHWAYS

STANDARD DRAWING

MECHANICALLY STABALIZED EARTH WALL (MSE WALL)
TYPICALNUMBER OF REINFORCING PER LAYER

DESIGNED : D.O.H. & CONSULTANTS	CHECKED : BUREAU OF LOCATION & DESIGN	DATE : OCT 2015	
SUBMITTED : (DIRECTOR OF LOCATION & DESIGN BUREAU)		SCALE : AS SHOWN	
APPROVED : (FOR DIRECTOR GENERAL)		DWG NO. SP-514	
		SHEET NO. 145	

REF.	REVISION	SIGNATURE	DATE

D:\std dwg 2015\SP-514(REV00)

DESIGN AND SPECIAL PROVISION FOR GABION WALL

1. GENERAL DESCRIPTIONS

GABIONS ARE LARGE CAGES OR BASKETS USUALLY OF STEEL WIRE MESH, RECTANGULAR IN SHAPE, FILLED WITH STONE AND USE TO BUILD RETAINING WALLS, REVETMENTS AND ANTI-EROSION WORKS. A FILTER LAYER, TODAY OFTEN A GEOTEXTILE, IS PLACED BETWEEN THE GABIONS AND THE BACKFILL IF THERE IS A DANGER OF SOIL PARTICLES BEING WASHED OUT THROUGH THE ROCK FILL BY SEEPAGE OR WAVE ACTION.

2. ADVANTAGES OF GABION WALL

GABION WALL MAY PROVIDE THE FOLLOWING ADVANTAGES FOR PROJECTS:

2.1 FLEXIBILITY: GABIONS CONFORM TO DIFFICULT SITE GEOMETRY AND CAN ADJUST TO DIFFERENTIAL SETTLEMENT AND LATERAL MOVEMENT.

2.2 PERMEABILITY: PREVENTS THE BUILD UP OF WATER PRESSURE. ALLOWS THE CONSTRUCTION OF HIGH-CAPACITY DRAINAGE SYSTEMS.

2.3 LOW LEVEL OF WORK SKILL REQUIRED: TRAINING OF UNSKILLED LABOR IS POSSIBLE WITHIN A SHORT TIME.

2.4 LOW COST: MINIMAL TRANSPORTATION COST WHERE LOCAL ROCK FILL CAN BE USED. SPEEDY CONSTRUCTION.

3. MATERIALS

3.1 HEXAGONAL WOVEN WIRE MESH

THE NETTING IS MECHANICALLY WOVEN IN A CONTINUOUS SHEET, TO FORM A HEXAGONAL MESH WHICH CAN STRETCH OR CONTRACT IN TWO DIRECTIONS IN ITS OWN PLANE SO THAT A RECTANGULAR WIRE MESH BOX FILLED WITH QUARRIED STONE OR RIVER SHINGLE CAN DEFORM IN ANY DIRECTION.

4. CORROSION AND DAMAGE OF GABIONS

IN THE USE OF GABIONS THE FOLLOWING MATTERS SHOULD BE CONSIDERED.

4.1 GALVANIZED WIRE. HEXAGONAL WOVEN MESH GABIONS SHOULD BE MADE FROM WIRE GALVANIZED TO BS 443 STANDARD. GALVANIZED GABIONS MAY BE USED WHERE THE EXPECTED LIFE TO THE GALVANIZED WIRE IS SUFFICIENT FOR THE INTENDED LIFE OF THE STRUCTURE. GENERALLY, GALVANIZED WIRE IS USED FOR NORMAL ENVIRONMENT WHERE THE EFFECT OF WATER OR ACID SOIL IS NOT MUCH. IF THE CONDITIONS ARE AGGRESSIVE TO THE GALVANIZED WIRE COATING, THE USE OF GALFAN COATED WIRE (ALU-ZINC) OR POLYVINYL CHLORIDE (PVC) COATED WIRE SHOULD BE CONSIDERED.

4.2 GALFAN COATED WIRE. THE GALFAN COATING HAS MORE CORROSION RESISTANCE THAN NORMAL GALVANIZED COATED OF AROUND 3 – 5 TIMES. THIS COATING COMPOSITE CONSISTS OF ALUMINIUM (5%) AND ZINC (95%) AND SHALL HAVE SPECIFICATION ACCORDING TO ASTM A856/A 856M-98. GALFAN COATED WIRE WILL BE USED FOR SEVERE CONDITION SUCH AS RIVERBANK OR WHERE THE EXTRA LIFETIME OF COATING IS REQUIRED.

4.3 PVC COATED WIRE. THE PVC COATING SHOULD CONFORM TO BS 4102. THE RADIAL THICKNESS OF THE COATING APPLIED TO THE GALVANIZED WIRE CORE SHOULD BE A MINIMUM OF 0.25 MM. THE PVC SHOULD BE SUFFICIENTLY BONDED TO THE GALVANIZED WIRE CORE TO PREVENT A CAPILLARY FLOW OF WATER BETWEEN THE WIRE AND THE PVC COATING LEADING TO CORROSION. THE CONDITION SUITED FOR PVC COATED GABION IS SEVERE CONDITION SUCH AS RIVERBANK AND WHERE HIGH CORROSION SOIL (ACID SOIL) OR WATER IS FOUND.

4.4 DAMAGE BY ABRASION. GALVANIZED, GALFAN AND PVC COATED WIRE MAY BE DAMAGED BY ABRASION, BY MOVING SHINGLE IN RIVER BEDS AND ON COASTAL FORESHORES. IN MOUNTAIN RIVERS, WHERE THE HEAVY WATERBORNE MATERIAL USUALLY TRAVELS ALONG THE BED, GALFAN AND PVC GABION MESH HAS BEEN SATISFACTORY IN THE CONSTRUCTION OF RIVER WALLS WITH VERTICAL WATER FACES BUT ANTI-SCOUR APRONS WITH HORIZONTAL SURFACES SHOULD BE AVOIDED. GALVANIZED MESH IS MORE EASILY ABRADED IN THESE SITUATIONS.

4.5 ON COASTAL FORESHORES, PVC COATED GABIONS ARE UNSATISFACTORY WHERE LARGE SHINGLE, OR HEAVY ABRASIVE MATERIAL, IS LIKELY TO BE THROWN AGAINST, OR, WASHED OVER THE STRUCTURE BY WAVE ACTION. HOWEVER, IN THIS EXTREME CONDITION THE PVC-GALFAN COATED GABION IS MORE FAVOURED.

5. DESIGN CONSIDERATIONS

5.1 WALL GEOMETRY

TYPICAL CROSS SECTION OF GABION WALLS ARE SHOWN IN FIGURE 1 DEPENDING ON THE PROPERTIES AND THE SLOPE OF THE BACKFILL, THE BASE OF A GABION WALL MAY RANGE FROM 50 TO 90% OF ITS HEIGHT. IT IS COMMON PRACTICE TO TILT THE WALL BACKWARD AT AN ANGLE OF ABOUT 6° (1:10) TO INCREASE WALL STABILITY. HIGH WALLS MAY REQUIRE A CONCRETE FOOTING, BUT IN GENERAL ONLY LITTLE FOUNDATION PREPARATION NEEDS TO BE DONE. THE CHOICE OF EITHER BATTERED OR STEPPED FACES RESTS WITH DESIGNER; STEPPED FACE RECOMMENDED IF WALL IS MORE THAN 3.00 M HIGH.

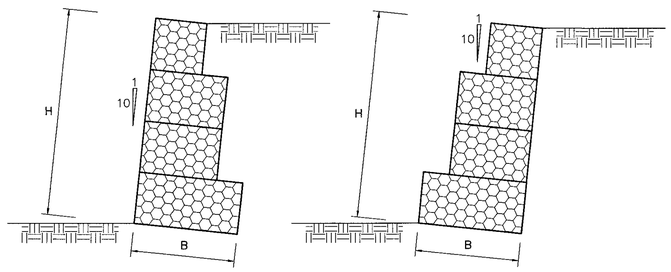

(A) BATTERED FACE (B) STEPPED FACE

FIGURE 1 TYPICAL CROSS SECTION OF GABION WALL

5.2 UNIT WEIGHT OF ROCK-FILLED GABIONS

THE UNIT WEIGHT OF ROCK-FILLED GABIONS IS ABOUT TWO-THIRDS OF THE UNIT WEIGHT OF THE ROCK SOLIDS. THIS MEANS THAT THE USE OF TYPICAL HARD LIMESTONE OR GRANITE RESULTS IN A FILL WEIGHT OF ABOUT 17 KN/CU.M. OTHER TYPICAL VALUE OF ROCK AS SHOWN IN TABLE 1.

5.3 DESIGN PARAMETERS

SEE TABLE 2

5.4 DESIGN

5.4.1 GENERAL

GABION WALLS SHOULD BE DESIGNED ON THE SAME PRINCIPLE AS A GRAVITY MASS WALL, NO ALLOWANCE BEING MADE FOR THE STRENGTH OR MASS OF THE WIRE MESH.

TABLE 1 TYPICAL UNIT WEIGHT OF ROCK-FILLED IN GABION BASKET

TYPE OF ROCK	UNIT WEIGHT (KN/CU.M)
BASALT	29
GRANITE	26
HARD LIMESTONE	26
TRACHYTES	25
SANDSTONE	23
SOFT LIMESTONE	22

TABLE 2 SUMMARY OF DESIGN PARAMETERS

MATERIALS	UNIT WEIGHT (KN/CU.M)	ANGLE OF INTERNAL FRICTION (DEG)	COHESION (KPA)
SELECTED BACKFILL	20.00	32.00	0.00
FOUNDATION	20.00	30.00	0.00
ROCK-FILLED	25.00	–	–

5.4.2 EQUILIBRIUM OF THE WALL

THE RETAINED SOIL WILL EXERT ACTIVE PRESSURE OVER THE ENTIRE WALL HEIGHT, BUT WITH NO HYDROSTATIC PRESSURE.

THE CROSS SECTION OF A GABION WALL, AS A MASS GRAVITY STRUCTURE, SHOULD BE PROPORTIONED SO THAT THE RESULTANT FORCE AT ANY HORIZONTAL SECTION LIES WITHIN THE MIDDLE THIRD OF THAT SECTION. THE THRUST EXERTED BY THE BACKFILL ON A GABION WALL ACTS AT THE PERPENDICULAR TO THE WALL. THIS ANGLE CAN BE ASSUMED TO EQUAL THE DESIGN VALUE OF EFFECTIVE ANGLE OF SHEARING RESISTANCE DUE TO THE ROUGHNESS OF THE GABION SURFACE, WHICH MAY BE ASSUMED TO BE A SOIL TO SOIL FRICTION SURFACE.

WHEN RETAINED SOIL IS SUPPORT BY A HEEL TO THE WALL THE SOIL MAY BE ASSUMED TO BE A PART OF THE WALL AND THE DESIGN ASSUMES A VIRTUAL VERTICAL REAR FACE.

WHEN CALCULATING THE RESISTANCE AGAINST SLIDING FORWARD THE ANGLE OF FRICTION SHOULD BE TAKEN AS THAT OF THE FOUNDATION SOIL AND NOT AS THAT BETWEEN STONE RUBBLE AND THE SOIL. THE ANGLE OF FRICTION BETWEEN THE BASE OF GABION WALL AND GRANULAR SOIL MAY BE ASSUME 0.9 TIMES THE ANGLE OF INTERNAL FRICTION OF SOIL. THE GABION WALL CAN BE BUILT ON A SLOPED FOUNDATION TO INCREASE THIS RESISTANCE.

WHEN CALCULATING THE MAXIMUM PRESSURE AT THE BASE OF GABION WALL MUST BE LESS THAN THE ANTICIPATED BEARING CAPACITY OF THE SOIL UNDER THE WALL.

5.4.3 DESIGN ASSUMPTIONS

5.4.3.1 STEPPED FACE WALL WITH HORIZONTAL BACKFILL

5.4.3.2 BACKFILL MATERIAL BEHIND GABION WALL IS COHESIONLESS SOIL

5.4.3.3 NO GROUNDWATER ACTING BEHIND THE WALL (FREE DRAINAGE) IN THE CASE OF GABION WALL LOCATED IN THE ARID REGION OF SIDE SLOPE.

5.4.3.4 ASSUME DRAWDOWN CONDITION FROM UPPERMOST TO THE HEEL OF GABION WALL IN THE CASE OF GABION WALL LOCATED IN THE SIDE SLOPE AND ADJACENT WITH WATERFRONT REGION.

5.4.3.5 SUPERIMPOSED LOAD OVER THE BACKFILL MATERIAL 15 KPA

5.4.3.6 NO CONSIDERED EARTHQUAKE LOADING IN THE DESIGN SITUATION

5.4.3.7 ASSUME THE WALL TILT AWAY FROM THE SOIL RETAINED. WITH SUFFICIENT WALL TILT, A TRIANGULAR SOIL WEDGE BEHIND THE WALL WITH FAIL. THE LATERAL PRESSURE FOR THIS CONDITION IS REFERRED TO AS ACTIVE EARTH PRESSURE (KA)

5.5 CALCULATIONS

5.5.1 ACTIVE EARTH PRESSURE, KA

5.5.2 STABILITY AGAINST SLIDING (FS-SLIDING)

5.5.3 STABILITY AGAINST OVERTURNING (FS-OVERTURNING)

5.5.4 BEARING CAPACITY OF FOUNDATION (Q-ALLOWABLE)

5.5.5 OVERALL STABILITY (FS-OVERALL)

5.6 MINIMUM FACTOR OF SAFETY

5.6.1 STABILITY AGAINST SLIDING SHALL NOT BE LESS THAN 1.50.

5.6.2 STABILITY AGAINST OVERTURNING SHALL NOT BE LESS THAN 1.50.

5.6.3 BEARING CAPACITY OF FOUNDATION SHALL NOT BE LESS THAN 3.00.

5.6.4 OVERALL STABILITY SHALL NOT BE LESS THAN 1.30.

6. CONSTRUCTIONS

6.1 POSITIONING CAGES

EMPTY CAGE MAY BE PLACED SINGLY OR JOINED TOGETHER IN GROUPS. WOVEN WIRE MESH GABIONS MAY BE STRETCHED WITH A SMALL WINCH BEFORE THEY ARE WIRED TO ADJACENT UNITS THAT HAVE ALREADY BEEN FILLED. UNDERWATER GABIONS, BY THEIR NATURE, ARE PRE-FILLED BEFORE THEY ARE PLACED BY CRANE.

THE CAGES SHOULD BE TIGHTLY FILLED WITH SOME OVERFILLING TO ALLOW FOR SUBSEQUENT SETTLEMENT. HORIZONTAL INTERNAL BRACING WIRES SHOULD BE FITTED BETWEEN THE OUTER AND INNER FACES AT 0.33 M CENTRES GABIONS WHICH ARE DEEPER THAN 500 MM. WHEN FILLED, THE GABIONS LIDS SHOULD BE PROPERLY CLOSED WITHOUT GAPS, AND WIRED DOWN. THE VERTICAL JOINTS BETWEEN INDIVIDUAL UNITS SHOULD BE STAGGERED IN ADJACENT COURSES, TO GIVE A BETTER APPEARANCE AND TO PREVENT THE FORMATION OF WEAK VERTICAL SHEAR PLANES. CURVES AND ANGLES IN THE FACE OF THE STRUCTURE MAY BE FORMED BY CUTTING AND FOLDING THE WIRE MESH TO MAKE SPECIALLY SHAPED UNITS.

6.2 MARINE APPLICATIONS

WHERE GABIONS ARE SUBJECTED WAVE ACTION, THERE SHOULD BE A MINIMAL AMOUNT OF MOVEMENT OF THE STONE FILLING INSIDE THE BASKETS. THE FILLING SHOULD BE TIGHTLY PACKED AND THE WIRE MESH SHOULD TAUT. IT IS GOOD PRACTICE TO OPEN THE BASKETS AFTER A FEW TIDES HAVE PASSES THROUGH THE WORK AND TO ADD STONE TO MAKE GOOD ANY SETTLEMENT THAT HAS OCCURRED IN THE FILLING. ANY LOOSE STONE LEFT OVER AFTER CONSTRUCTION SHOULD BE REMOVED AND NOT LEFT ON THE FORESHORE.

6.3 OTHER ENVIRONMENTS

WHEN WATER QUALITY IS IN DOUBT (PH BELOW 6 OR GREATER THAN 12) OR WHERE HIGH CONCENTRATION OF ORGANIC ACIDS MAY BE PRESENT, USE OF PVC (POLYVINYL CHRORIDE) COATED GABIONS IS RECOMMENDED.

7. SUBMISSION

THESE RECOMMENDED DRAWINGS SHALL BE USED ONLY AS THE GUIDELINE FOR THE DESIGN OF GABION WALL. THE CONTRACTOR FOR THE GABION WALL SYSTEM SHALL SUBMIT COMPLETE DESIGN COMPUTATIONS AND SHOP DRAWINGS TO ENGINEER FOR REVIEW AND APPROVAL BEFORE BEGINNING OF THE CONSTRUCTION OF THE GABION WALL. THE SUBMITTED SHOP DRAWINGS SHALL COMPLY WITH THE DESIGN PLANS, AND INCLUDE ALL DETAILS, DIMENSIONS, QUANTITIES AND ANY INFORMATION REQUIRED TO LAY OUT AND CONSTRUCT THE WALL. THE INFORMATION SHALL INCLUDE, BUT NOT BE LIMITED TO, THE FOLLOWING:

7.1 PLAN DRAWING FOR EACH WALL

7.2 TYPICAL CROSS SECTION DRAWING FOR EACH WALL

7.3 DETAIL FOR CONSTRUCTION

7.4 GEOTECHNICAL AND SOIL INVESTIGATION REPORT

7.5 DESIGN REPORT

7.6 MATERIAL SPECIFICATIONS

7.7 SUMMARY OF LABORATORY TESTING AS INDICATED IN 7.6

REF.	REVISION	SIGNATURE	DATE

KINGDOM OF THAILAND
MINISTRY OF TRANSPORT
DEPARTMENT OF HIGHWAYS

STANDARD DRAWING

GABION

DESIGN AND SPECIAL PROVISION

DESIGNED : D.O.H. & CONSULTANTS | CHECKED : BUREAU OF LOCATION & DESIGN | DATE : OCT 2015

SUBMITTED : (DIRECTOR OF LOCATION & DESIGN BUREAU) | SCALE : AS SHOWN

APPROVED : (FOR DIRECTOR GENERAL) | DWG NO. SP-601 | SHEET NO. 146

D:\std dwg 2015\SP-601(REV00)

MATERIAL SPECIFICATIONS OF GABION

1. GENERAL NOTES

GABIONS SHALL BE MESH TYPE "8" WOVEN HEAVILY ZINC OR GALFAN COATED (WITH OR WITHOUT PVC) WIRE MESH BOXES OF DIMENSIONS IN ACCORDING WITH ASTM A975.

ALL MATERIAL SUPPLIED MUST BE ACCOMPANIED BY A MANUFACTURING CERTIFICATE FROM THE FACTORY FOR QUALITY CONTROL AND QUALITY MANAGEMENT PURPOSES. THE MATERIAL SHALL BE SOURCED FROM AN ISO 9001 CERTIFIED FACTORY.

ALL MATERIAL SHALL BE SOURCED FROM A MANUFACTURER WHO HAS AN INTERNATIONALLY ACCEPTED PRODUCT / SYSTEM CERTIFICATION, WHICH ANALYZES ALL ASPECTS OF THE PRODUCT / SYSTEM INCLUDING:

1.1 DESIGN
1.2 INSTALLATION
1.3 MAINTENANCE AND REPAIR, AND
1.4 DURABILITY

2. BOX SIZES

GABIONS SHALL BE MECHANICALLY PRE-FABRICATED IN SUCH A MANNER THAT THE SIDES, ENDS, LIDS AND DIAPHRAGMS CAN BE ASSEMBLED AT THE CONSTRUCTION SITE INTO RECTANGULAR BASKETS OF THE STANDARD SIZES AS SPECIFIED IN TABLE 3 OR AS SPECIFIED IN THE CONTRACT DRAWINGS.

TABLE 3 TYPICAL STANDARD SIZE OF GABION

MESH TYPE	"8"
LENGTH, L (M)	1.00, 1.50, 2.00 and 3.00
WIDTH, W (M)	1.00
DEPTH, D (M)	0.50 AND 1.00
DIAPHRAGM SPACING (M)	EVERY 1.00

ALL GABION DIMENSIONS FOR THE ABOVE STANDARD SIZES SHALL BE WITHIN A TOLERANCE LIMIT OF ± 5.00% OF THE REQUIRED NOMINAL SIZE.

THE BOXES SHALL BE DIVIDED BY DIAPHRAGMS INTO CELLS OF ONE METER LENGTH, EXCEPT FOR THE 1.5M LENGTH BOX SIZE WHICH MAY HAVE NO DIAPHRAGM ATTACHED.

3. WIRE DIAMETER AND STRENGTH

ALL STEEL WIRE USED IN THE FABRICATION OF THE GABIONS AND IN THE WIRING OPERATIONS DURING CONSTRUCTION SHALL BE ACCORDING TO EN10223 – 3 AND HAVING THE CHARACTERISTICS AS SPECIFIED IN THE TABLE 4.

TABLE 4 NOMINAL SIZE AND YIELD TENSILE STRENGTH OF WIRE

TYPE OF WIRE	WIRE DIAMETER (MM)	TOLERANCE (MM)	YIELD TENSILE STRENGTH (KG/SQ.MM)
LACING	2.20	± 0.06	≥ 38
BODY	2.70	± 0.08	≥ 38
SELVEDGE	3.40	± 0.10	≥ 38

4. WIRE COATING

ALL WIRE USED IN THE FABRICATION OF THE GABIONS AND IN THE WIRING OPERATIONS DURING CONSTRUCTION SHALL BE HEAVILY GALVANIZED WITH ZINC OR GALFAN (5% AL – ZINC). IN ADDITIONAL, THE PVC CAN BE USED WHEN SPECIFIED TO BE ADDITIONAL COATING TO THE ZINC OR GALFAN WIRE. THE COATING TYPE SHALL BE AS SPECIFIED IN THE CONTRACT DRAWINGS. IF NO COATING TYPE SPECIFIED, THEN THE NORMAL ZINC COATING WILL BE USED.

FOR ZINC COATING, THE COATING SHALL MEET OR EXCEED EN 10244 – 2 CLASS A WITH THE MINIMUM MASS OF THE ZINC AS SPECIFIED IN TABLE 5

TABLE 5 MINIMUM WEIGHT OF ZINC COATING

DIAMETER OF WIRE (MM)	WEIGHT OF ZINC COATING (G/SQ.M)
2.20	230
2.70	245
3.40	265

FOR GALFAN (5% AL – ZINC) COATING, THE COATING SHALL MEET OR EXCEED ASTM A 856/A 856M – 98 CLASS 100 WITH THE MINIMUM MASS OF COATING NOT LESS THAN 305 G/SQ.M. THE CHEMICAL COMPOSITE OF THE GALFAN COATING SHALL BE CONSISTED OF 5% ALUMINUM AND 95% ZINC APPROXIMATELY BY WEIGHT. THE ACCEPTED LEVEL OF ALUMINUM IN THE COATING SHALL BE BETWEEN 4.5% TO 9%. THE ADHESION OF THE ZINC OR GALFAN COATING TO THE WIRE SHALL BE SUCH THAT WHEN THE WIRE IS WRAPPED SIX TIMES AROUND A FOUR WIRE DIAMETER SIZE MANDREL, IT SHALL NOT FLAKE OR CRACK TO SUCH AN EXTENT THAT ANY COATING CAN BE REMOVED.

FOR PVC ADDITIONAL COATING, THE POLYVINYL CHLORIDE (PVC) SHALL HAVE EXTRUDED ONTO THE WIRE AFTER COATING IT WITH ZINC OR GALFAN. THE PVC COATING SHALL BE IN GREY COLOUR AND HAVING NOMINALLY 0.50 MM AVERAGE THICKNESS WITH A TOLERANCE OF ± 0.05MM, AND NOWHERE SHALL BE LESS THAN 0.40 MM THICKNESS.

5. WIRE MESH

WIRE MESH SHALL BE MECHANICALLY PRE-FABRICATED TO BECOME A UNIFORM HEXAGONAL WOVEN MESH WHEREIN THE JOINTS ARE FORMED BY TWISTING EACH PAIR OF WIRES THROUGH THREE HALF-TURNS (COMMONLY KNOWN AS DOUBLE TWIST), IN SUCH A MANNER THAT UNRAVELING IS PREVENTED.

DOUBLE-TWIST MESH IS DEMONSTRATED IN FIGURE 2. THE WIRE MESH DIMENSIONAL LAYOUT CAN BE SPECIFIED IN TABLE 6.

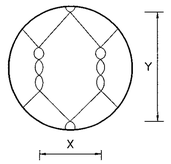

FIGURE 2 WIRE MESH DIMENSIONAL LAYOUT

TABLE 6 NOMINAL SIZE OF MESH TYPE "8"

NOMINAL MESH TYPE	X (mm)	Y (mm)	TOLERANCE (%)
8	80	120	± 10

6. SELVEDGES

THE CUT EDGES OF ALL MESH USED IN THE CONSTRUCTION OF GABIONS, EXCEPT THE BOTTOM EDGES OF END PANELS AND DIAPHRAGMS, SHALL BE FORMED MECHANICALLY WITH A SELVEDGE WIRE WHICH IS A LARGER DIAMETER THAN THE BODY WIRE.

AT LEAST TWO SELVEDGE WIRES ON EACH GABION BOX SHALL BE ADDITIONAL COATED WITH PVC AND UNIQUELY EMBOSSED WITH MANUFACTURER NAME APPROXIMATELY EVERY 500 MM.

7. DIAPHRAGMS AND END PANELS

THE END PANELS AND DIAPHRAGMS SHALL BE MECHANICALLY SELVEDGED ON THE TOP AND VERTICAL SIDES.

THE END PANELS SHALL BE ATTACHED BY MECHANICALLY TWISTING THE CUT ENDS OF THE MESH WIRES AT THE BOTTOM OF THE PANEL TO THE SELVEDGE WIRE ON THE BASE OF THE GABION.

SIMILARLY, THE DIAPHRAGMS SHALL BE CONNECTED TO THE BASE BY A SPIRAL WIRE PASSING IN TURN THROUGH MESH OPENINGS OF THE BASE AND EACH MESH OF THE DIAPHRAGM PANEL. THE WIRE FOR THE SPIRAL SHALL BE OF THE SAME TYPE OF THE MESH WIRE, BUT THE DIAMETER SHALL BE 2.20 MM IN DIAMETER.

8. LACING AND BRACING WIRE

THE DIAMETER OF THE LACING AND BRACING WIRE SHALL BE 2.20 MM. THE LACING WIRE SHALL BE SUPPLIED IN THE QUANTITY OF 5% OF THE TOTAL GABION WEIGHT TO ENABLE THE LACING AND BRACING TO BE UNDERTAKEN.

9. ROCK FILL

THE MATERIAL USED FOR GABION FILL SHALL BE CLEAN, HARD, DENSE AND DURABLE STONE, ROUNDED OR ANGULAR SHAPE.

NO ROCK SHALL EXCEED 250MM AND AT LEAST 85% BY WEIGHT OF THE STONES SHALL HAVE A SIZE EQUAL TO OR LARGER THAN 100 MM. NO ROCK SHALL PASS THROUGH THE MESH.

10. ASSEMBLY

PRIOR TO ASSEMBLY, THE GABION MATERIAL SHALL BE OPENED OUT FLAT ON THE GROUND AND STRETCHED TO REMOVE ALL KINKS AND BENDS (FIGURE 3 (A)).

THE GABION BOXES SHALL BE ASSEMBLED INDIVIDUALLY, BY RAISING THE SIDES, ENDS AND DIAPHRAGMS, ENSURING THAT ALL CREASES ARE IN THE CORRECT POSITION AND THAT THE TOPS OF ALL FOUR SIDES AND THE DIAPHRAGMS ARE EVEN.

THE FOUR CORNER EDGES OF THE GABION BOXES SHALL BE LACED FIRST, FOLLOWED BY THE EDGES OF INTERNAL DIAPHRAGMS TO THE SIDES (FIGURE 3 (B)).

IN ALL CASES, LACING SHALL COMMENCE BY TWISTING THE END OF THE LACING WIRE TIGHTLY AROUND THE SELVEDGE. IT SHALL THEN PASS ROUND THE TWO EDGES BEING JOINED USING ALTERNATE SINGLE AND DOUBLE LOOPS AT 100MM INTERVALS AND BE SECURELY TIED OFF AT THE BOTTOM. THE ENDS OF ALL LACING WIRES SHALL BE TURNED TO THE INSIDE OF THE BOX ON COMPLETION OF EACH LACING OPERATION (FIGURE 3 (C) AND 3 (D)). EACH LOOP SHALL BE PULLED TIGHT TO PREVENT THE JOINT OPENING DURING FILLING. TIGHTNESS OF THE LACING IS ESSENTIAL.

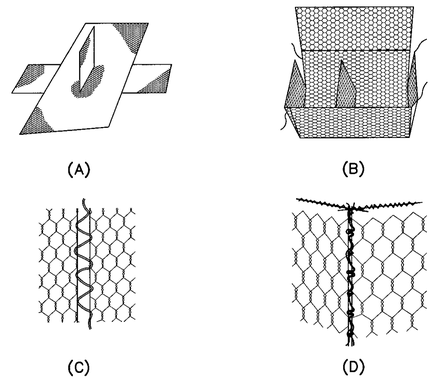

FIGURE 3 GABION ASSEMBLY

11. ERECTION

ASSEMBLED BOXES, OR GROUPS OF BOXES, SHALL BE POSITIONED IN THE STRUCTURE. THE SIDE, OR END, FROM WHICH WORK IS TO PROCEED, SHALL BE SECURED EITHER TO THE COMPLETED WORK, OR BY RODS OR STAKES DRIVEN INTO THE GROUND AT THE CORNER. THESE STAKES MUST BE SECURED AND REACH AT LEAST TO THE TOP OF THE GABION BOX.

FURTHER GABION BOXES SHALL BE POSITIONED IN THE STRUCTURE AS REQUIRED, EACH BEING SECURELY LACED TO THE PRECEDING ONE ALONG ALL COMMON CORNERS AND DIAPHRAGMS (FIGURE 4).

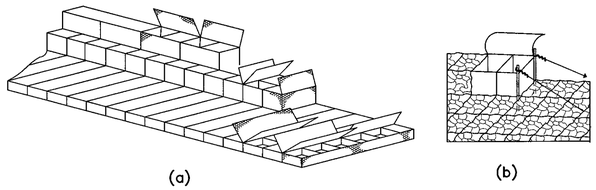

FIGURE 4 GABION ERECTION

12. STRETCHING

FINAL STRETCHING OF THE GABION BOXES SHALL BE CARRIED OUT USING A PULL-LIFT OF AT LEAST ONE TON CAPACITY, FIRMLY SECURED TO THE FREE END OF THE ASSEMBLED GABION BOXES (FIGURE 4 (B)).

WHILST UNDER TENSION, THE GABION BOXES SHALL BE SECURELY LACED ALONG ALL EDGES (TOP, BOTTOM AND SIDES) AND AT DIAPHRAGM POINTS, TO ALL ADJACENT BOXES.

13. FILLING

FILLING SHALL BE CARRIED OUT WHILST GABION BOXES ARE UNDER TENSION.

THE FRONT FACE AND ALL OTHER FACES WHICH WILL BE EXPOSED IN THE COMPLETED STRUCTURE SHALL BE "HAND PACKED" WITH THE STONES PLACED SO AS TO PRODUCE A NEAT FACE FREE FROM EXCESSIVE BULGES, DEPRESSIONS AND VOIDS.

INTERNAL BRACING WIRES SHALL BE PROVIDED ON THE EXPOSED FACES AT THE RATE OF 4 NOS./CU.M AT 0.33 M VERTICAL CENTERS IN 1 M HEIGHT GABION BOX TO PREVENT DISTORTION OF THE GABION UNITS DURING FILLING AND IN THE COMPLETED STRUCTURE (FIGURE 5 (A)). THESE BRACING WIRES SHALL BE WRAPPED AROUND TWO OF THE MESH WIRES (FIGURE 5 (B)) AND EXTEND FROM FRONT TO BACK. ADDITIONAL BRACING WIRES SHALL BE PROVIDED ON EXPOSED ENDS AT A RATE OF 4 NOS./SQ.M OF FACE.

GABION BOXES SHALL BE FILLED UP IN STAGES AND HORIZONTAL BRACING WIRE INSERTED AS FILLING IS BROUGHT UP.

MECHANICAL FILLING EQUIPMENT MAY BE USED WITH THE APPROVAL OF THE ENGINEER AND PROVIDING ADEQUATE PRECAUTIONS ARE TAKEN TO PROTECT THE PVC COATING FROM ABRASION DURING FILLING OPERATIONS.

TENSION ON THE GABION BOXES SHALL BE RELEASED ONLY WHEN FULLY LACED AND SUFFICIENTLY FULL TO PREVENT THE MESH FROM SLACKENING.

ALL GABIONS SHALL BE OVERFILLED BY 25MM USING FLAT STONE TO ALLOW FOR MINOR SETTLEMENT AND TO PROVIDE A LEVEL SURFACE FOR SUBSEQUENT LAYERS.

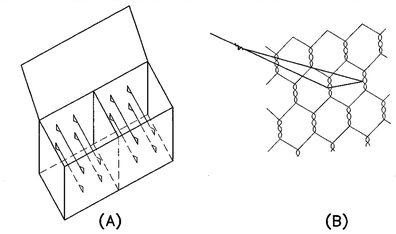

FIGURE 5 ROCK FILLING TECHNIQUE

14. FINAL LACING

CLOSING AND LACING DOWN OF LIDS SHALL PROCEED AS SOON AS PRACTICABLE AFTER FILLING OPERATIONS ESPECIALLY IF EXPOSED TO THE LIKELIHOOD OF STORM OR FLOOD DURING CONSTRUCTION.

LIDS SHALL BE STRETCHED TIGHT OVER THE FILLING WITH SUITABLY DESIGNED CLOSING TOOLS AND LACED DOWN SECURELY THROUGH EACH MESH ALONG ALL EDGES, ENDS AND DIAPHRAGMS USING THE LACING METHOD DESCRIBED ABOVE BEFORE COMMENCING WORK ON THE NEXT LAYER OF GABION. THE ENDS OF ALL TYING AND BRACING WIRES SHALL BE TURNED INTO THE GABION BOX ON COMPLETION OF EACH LACING OPERATION.

15. DOCUMENTS FOR PRODUCT APPROVAL

THE CONTRACTOR SHALL SUBMIT THE DOCUMENTS REGARDING FOR THE MATERIAL (GABION) THAT WILL BE USED IN THE PROJECT TO THE DESIGNER OR THE OWNER'S REPRESENTATIVE FOR APPROVAL. THESE DOCUMENTS SHALL BE SUBMITTED AT LEAST 30 DAYS BEFORE STARTING THE WORK. THE DETAIL OF DOCUMENTS FOR PRODUCT APPROVAL ARE AS BELOW;

15.1 COPY OF MANUFACTURER'S ISO 9001 CERTIFICATION
15.2 TECHNICAL DATA OF THE PRODUCT WHICH HAS MANUFACTURER'S NAME AND ADDRESS
15.3 PRODUCT SAMPLE (1 PIECE)
15.4 TEST REPORT OF THE PRODUCT MATERIAL. THE TEST SHALL BE CONDUCTED BY DOH OR RELIABLE INSTITUTE'S LABORATORY. THE DETAIL OF THE TEST FOR GABION SHALL BE AS BELOW;
  15.4.1 WIRE DIAMETER (INCLUDE MESH WIRE, SELVEDGE WIRE AND LACING WIRE)
  15.4.2 COATING QUANTITY (ASTM A90/A 90M-95A)
  15.4.3 TENSILE STRENGTH OF THE WIRE (ASTM E-8)
  15.4.4 CHEMICAL COMPOSITE OF COATING MATERIAL (ASTM E 1277, FOR GALFAN COATING ONLY)

MATERIAL SPECIFICATION OF GEOTEXTILE

1. GEOTEXTILE USED FOR GABION WALL

1.1 GEOTEXTILE WILL BE USED FOR FILTRATION AND SEPARATION BETWEEN GABIONS AND BACKFILL/FOUNDATION SOIL. THIS GEOTEXTILE SHALL BE MECHANICALLY NONWOVENS FROM ULTRAVIOLET STABILIZED POLYESTER OR POLYPROPYLENE USING NEEDLE PUNCHED PROCESS.

1.2 THE PHYSICAL AND ENGINEERING PROPERTIES OF GEOTEXTILE SHALL BE SPECIFIED AS INDICATED IN THE TABLE 6

TABLE 7 PHYSICAL AND ENGINEERING PROPERTIES OF GEOTEXTILE

TYPE OF WIRE	STANDARD	UNIT	VALUE (kg/sq.mm)
POLYESTER OR POLYPROPYLENE NEEDLE PUNCHED NONWOVEN GEOTEXTILE			
NOMINAL MASS	ISO 9864, ASTM D 5261	g/sq.m.	≥200
FLOW RATE (100 MM HEAD)	ISO 11058, BS 6906:3	litre/sq.m./sec	≥100
APPARENT OPENING SIZE, AOS (095)	ASTM D 4751	mm	≤0.21
CBR PUNCTURE	ISO 12236	N	≥2000

1.3 THE GEOTEXTILE SHALL HAVE ISO 9001 CERTIFICATION OF THE MANUFACTURING.

1.4 THE PROPERTIES OF GEOTEXTILE (AS ABOVE) SHALL BE TESTED BY RELIABLE THIRD PARTY LABORATORY. THE RESULT OF TESTING SHALL BE SUBMITTED WITH THE MANUFACTURER OFFICIAL TECHNICAL DATA SHEET.

1.5 THE GEOTEXTILE WILL BE PLACED ACCORDING TO THE CONSTRUCTION DRAWING. THE CONNECTION BETWEEN ROLLS OF GEOTEXTILE IS DONE BY THE MEAN OF SEAMING OR OVERLAPPING. THE LENGTH OF OVERLAPPING SHALL BE AT LEAST 300 MM FOR NORMAL CONDITION, 0.50 M FOR SOFT SOIL AND AT LEAST 1000 MM FOR UNDER WATER. FOR SEAMING METHOD, THE GEOTEXTILE SHALL BE OVERLAPPED AT LEAST 150MM BEFORE SEAMING.

1.6 DOCUMENTS FOR PRODUCT APPROVAL

THE CONTRACTOR SHALL SUBMIT THE DOCUMENTS REGARDING FOR THE MATERIAL (GEOTEXTILE) THAT WILL BE USED IN THE PROJECT TO THE DESIGNER OR THE OWNER'S REPRESENTATIVE FOR APPROVAL. THESE DOCUMENTS SHALL BE SUBMITTED AT LEAST 30 DAYS BEFORE STARTING THE WORK. THE DETAIL OF DOCUMENTS FOR PRODUCT APPROVAL ARE AS BELOW;

1.6.1 COPY OF MANUFACTURER'S ISO 9001 CERTIFICATION
1.6.2 TECHNICAL DATA OF THE PRODUCT WHICH HAS MANUFACTURER'S NAME AND ADDRESS
1.6.3 PRODUCT SAMPLE (1 PIECE)
1.6.4 TEST REPORT OF THE PRODUCT MATERIAL. THE TEST SHALL BE CONDUCTED BY DOH OR RELIABLE INSTITUTE'S LABORATORY. THE DETAIL OF THE TEST SHALL BE ACCORDING TO THE TABLE ABOVE.

REF.	REVISION	SIGNATURE	DATE

KINGDOM OF THAILAND

MINISTRY OF TRANSPORT
DEPARTMENT OF HIGHWAYS

STANDARD DRAWING

GABION
MATERIAL SPECIFICATIONS

DESIGNED : D.O.H. & CONSULTANTS	CHECKED : BUREAU OF LOCATION & DESIGN	DATE : OCT 2015
SUBMITTED : (DIRECTOR OF LOCATION & DESIGN BUREAU)		SCALE : AS SHOWN
APPROVED : (FOR DIRECTOR GENERAL)		DWG NO. SP-602
		SHEET NO. 147

D:\std dwg 2015\SP-602(REV00)

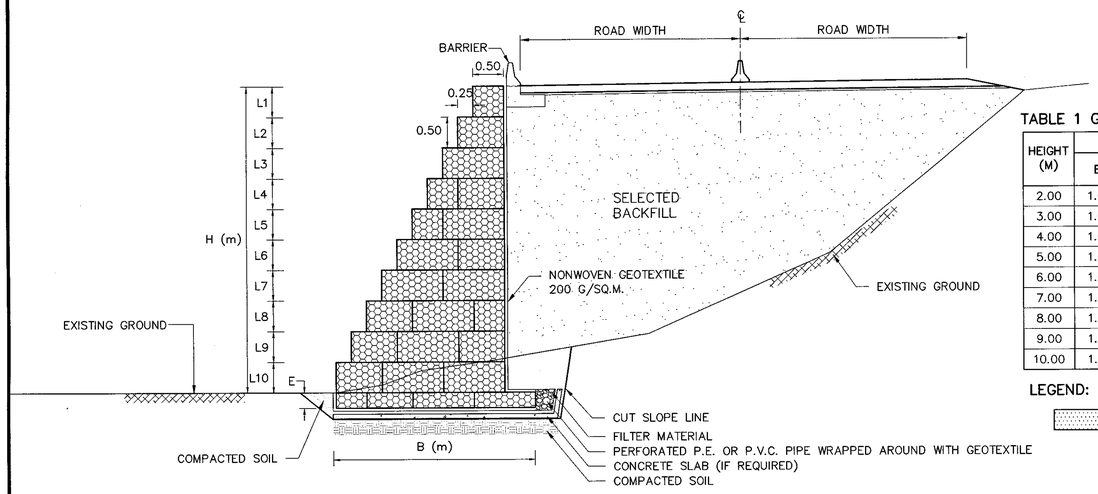

TABLE 1 GENERAL ARRANGEMENT OF GABION BASKET IN EACH LAYER

HEIGHT (M)	WIDTH OF EACH LAYER (B) FROM UPPERMOST TO THE BASE (METER)											QUANTITY OF GABION USED, BASKETS				ALLOWABLE BEARING CAPACITY (MIN) (KN/M^2)
	B1	B2	B3	B4	B5	B6	B7	B8	B9	B10	B11	1.50 x 1.00 x 0.50 (m)	2.00 x 1.00 x 0.50 (m)	1.50 x 1.00 x 1.00 (m)	2.00 x 1.00 x 1.00 (m)	
2.00	1.00	1.50										–	–	1.00	0.50	70
3.00	1.00	1.50	2.00	2.50								1.00	0.50	1.00	1.50	90
4.00	1.00	1.50	2.00	2.50	3.00							2.00	–	2.00	2.00	105
5.00	1.00	1.50	2.00	2.50	3.00	4.00						–	2.00	2.00	3.50	125
6.00	1.00	1.50	2.00	2.50	3.00	3.50	4.50					1.00	1.50	3.00	4.50	145
7.00	1.00	1.50	2.00	2.50	3.00	3.50	4.00	5.00				2.00	1.00	3.00	6.50	160
8.00	1.00	1.50	2.00	2.50	3.00	3.50	4.00	4.50	5.50			1.00	2.00	4.00	8.00	180
9.00	1.00	1.50	2.00	2.50	3.00	3.50	4.00	4.50	5.00	6.00		–	3.00	6.00	9.00	200
10.00	1.00	1.50	2.00	2.50	3.00	3.50	4.00	4.50	5.00	6.00	6.50	1.00	2.00	7.00	11.00	215

LEGEND:

– EMBEDED LAYER (E) TO THE EXISTING GROUND 0.50 M

TYPICAL CROSS SECTION OF GABION WALL LOCATED AT SIDE SLOPE IN DRY CONDITION (ANGLE OF BATTER 0 DEGREE)

SCALE 1 : 50

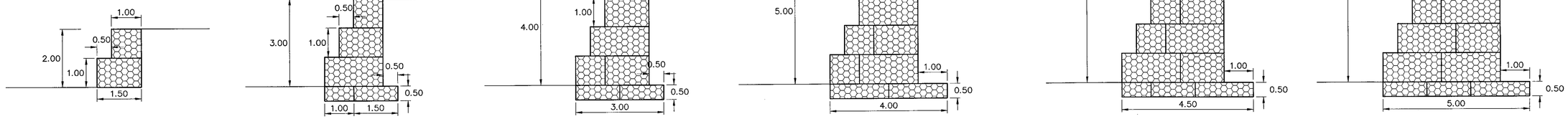

GENERAL ARRANGEMENT OF GABION BASKET FOR GABION WALL HEIGHT 2.00 TO 7.00 M

SCALE 1 : 75

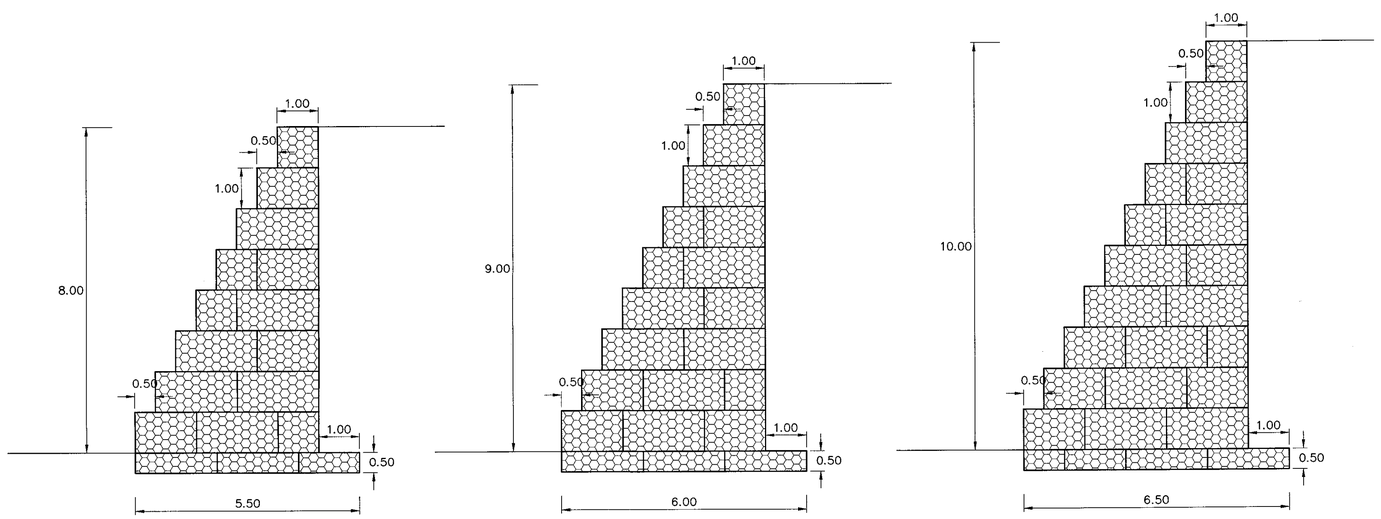

GENERAL ARRANGEMENT OF GABION BASKET FOR GABION WALL HEIGHT 8.00 TO 10.00 M

SCALE 1 : 75

NOTES :

1. ALL DIMENSIONS SHOWN ARE IN METERS, UNLESS OTHERWISE INDICATED.
2. THE SHAPE AND NUMBER OF GABION BASKET AS SHOWN IN THE TABLE 1 ARE ONLY RECOMMENDATION. THE CONTRACTOR SHALL SUBMIT COMPLETE DESIGN COMPUTATION.
3. CONTRACTOR SHALL SUBMIT COMPLETE DESIGN COMPUTATIONS, SOIL INVESTIGATION REPORT AND SHOP DRAWING TO ENGINEER FOR APPROVAL BEFORE BEGINNING OF THE CONSTRUCTION.
4. SOIL BORING INVESTIGATION SHALL BE CONDUCTED APPROXIMATELY AT 200 M INTERVAL. IN CASE OF COMPLEX GEOLOGICAL CONDITION, ADDITIONAL BOREHOLE SHALL BE REQUIRED AS DIRECTED BY THE ENGINEER.
5. PLATE LOAD TEST (ASTM 1194–94) SHALL BE CARRIED OUT TO CONFIRM BEARING CAPACITY OF FOUNDATION SOIL. FACTOR OF SAFETY OF AT LEAST 3.0 SHALL BE USED.
6. SELECTED BACKFILL SHALL CONFORM TO STANDARD NO. DH–S 105/2550.

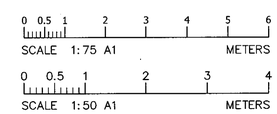

KINGDOM OF THAILAND

MINISTRY OF TRANSPORT
DEPARTMENT OF HIGHWAYS

STANDARD DRAWING
GABION
TYPICAL CROSS SECTION OF SIDE SLOPE IN DRY CONDITION (BATTER 0 DEGREE)

DESIGNED : D.O.H. & CONSULTANTS	CHECKED : BUREAU OF LOCATION & DESIGN	DATE : OCT 2015	
SUBMITTED : (DIRECTOR OF LOCATION & DESIGN BUREAU)		SCALE : AS SHOWN	
APPROVED : (FOR DIRECTOR GENERAL)		DWG NO. SP–603	
		SHEET NO. 148	

REF.	REVISION	SIGNATURE	DATE

D:\std dwg 2015\SP-603(REV00)

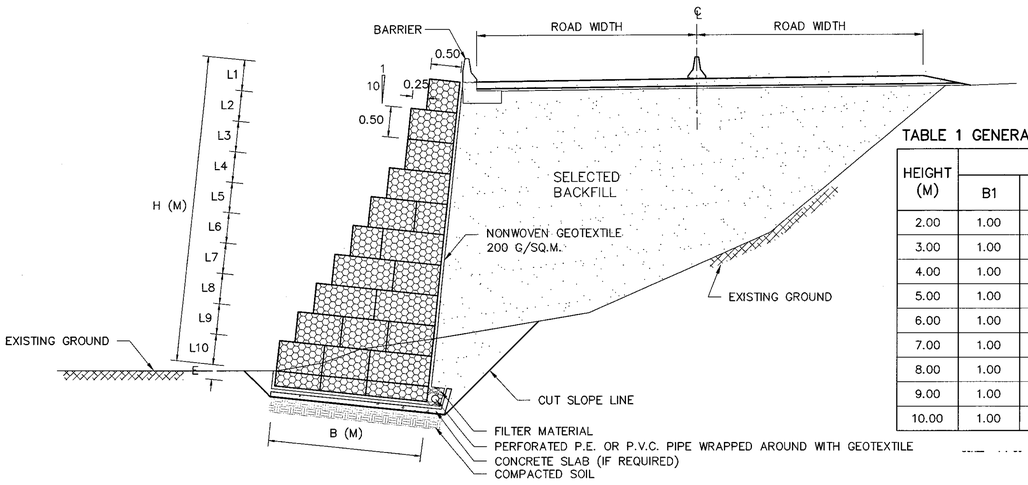

TABLE 1 GENERAL ARRANGEMENT OF GABION BASKET IN EACH LAYER

HEIGHT (M)	WIDTH OF EACH LAYER (B) FROM UPPERMOST TO THE BASE (METER)											QUANTITY OF GABION USED, BASKETS				ALLOWABLE BEARING CAPACITY (MIN) (KN/M^2)
	B1	B2	B3	B4	B5	B6	B7	B8	B9	B10	B11	1.50 x 1.00 x 0.50 (m)	2.00 x 1.00 x 0.50 (m)	1.50 x 1.00 x 1.00 (m)	2.00 x 1.00 x 1.00 (m)	
2.00	1.00	1.50										–	–	1.00	0.50	70
3.00	1.00	1.50	1.50									–	1.00	2.00	0.50	90
4.00	1.00	1.50	1.50	2.00	2.00							–	1.00	2.00	1.50	105
5.00	1.00	1.50	1.50	2.00	2.50	2.50						1.00	0.50	3.00	2.00	125
6.00	1.00	1.50	1.50	2.00	2.50	3.00	3.00					–	1.50	3.00	3.50	145
7.00	1.00	1.50	1.50	2.00	2.50	3.00	3.50	3.50				1.00	1.00	4.00	4.50	160
8.00	1.00	1.50	1.50	2.00	2.50	3.00	3.50	4.00	4.00			–	2.00	4.00	6.50	180
9.00	1.00	1.50	1.50	2.00	2.50	3.00	3.50	4.00	4.50	4.50		3.00	–	7.00	6.50	200
10.00	1.00	1.50	1.50	2.00	2.50	3.00	3.50	4.00	4.50	5.00	5.00	2.00	1.00	9.00	7.50	215

LEGEND:

– EMBEDED LAYER (E) TO THE EXISTING GROUND 0.50 M

TYPICAL CROSS SECTION OF GABION WALL LOCATED AT SIDE SLOPE IN DRY CONDITION (ANGLE OF BATTER 6 DEGREE)

SCALE 1 : 50

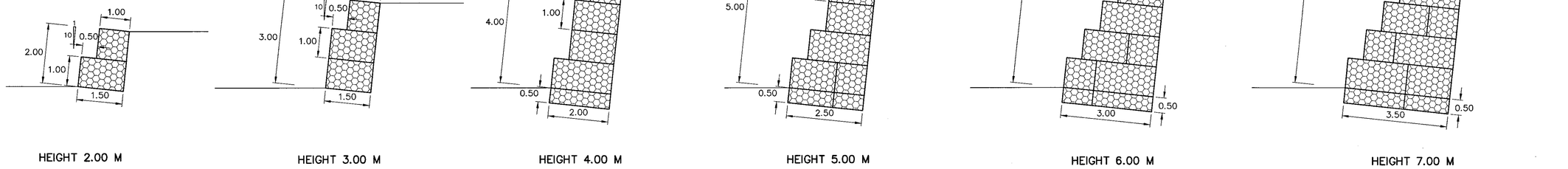

HEIGHT 2.00 M | HEIGHT 3.00 M | HEIGHT 4.00 M | HEIGHT 5.00 M | HEIGHT 6.00 M | HEIGHT 7.00 M

GENERAL ARRANGEMENT OF GABION BASKET FOR GABION WALL HEIGHT 2.00 TO 7.00 M

SCALE 1 : 75

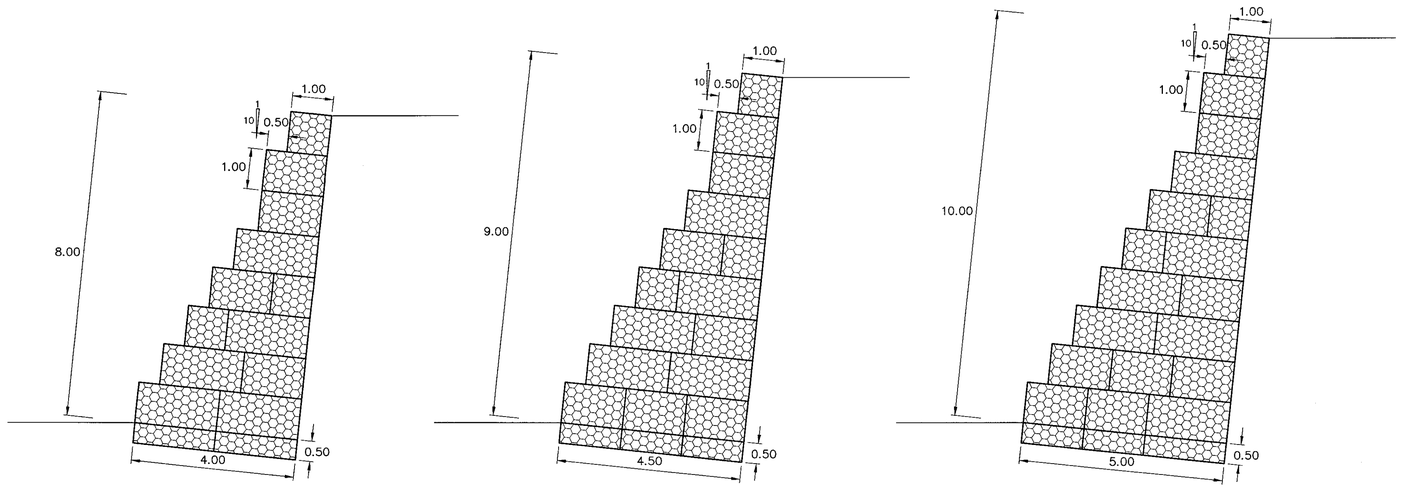

HEIGHT 8.00 M | HEIGHT 9.00 M | HEIGHT 10.00 M

GENERAL ARRANGEMENT OF GABION BASKET FOR GABION WALL HEIGHT 8.00 TO 10.00 M

SCALE 1 : 75

NOTES :

1. ALL DIMENSIONS SHOWN ARE IN METERS, UNLESS OTHERWISE INDICATED.
2. THE SHAPE AND NUMBER OF GABION BASKET AS SHOWN IN THE TABLE 1 ARE ONLY RECOMMENDATION. THE CONTRACTOR SHALL SUBMIT COMPLETE DESIGN COMPUTATION.
3. CONTRACTOR SHALL SUBMIT COMPLETE DESIGN COMPUTATIONS, SOIL INVESTIGATION REPORT AND SHOP DRAWING TO ENGINEER FOR APPROVAL BEFORE BEGINNING OF THE CONSTRUCTION.
4. SOIL BORING INVESTIGATION SHALL BE CONDUCTED APPROXIMATELY AT 200 M INTERVAL. IN CASE OF COMPLEX GEOLOGICAL CONDITION, ADDITIONAL BOREHOLE SHALL BE REQUIRED AS DIRECTED BY THE ENGINEER.
5. PLATE LOAD TEST (ASTM 1194–94) SHALL BE CARRIED OUT TO CONFIRM BEARING CAPACITY OF FOUNDATION SOIL. FACTOR OF SAFETY OF AT LEAST 3.0 SHALL BE USED.
6. SELECTED BACKFILL SHALL CONFORM TO STANDARD NO. DH–S 105/2550.

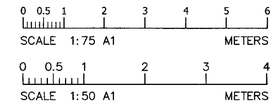

REF.	REVISION	SIGNATURE	DATE

KINGDOM OF THAILAND

MINISTRY OF TRANSPORT

DEPARTMENT OF HIGHWAYS

STANDARD DRAWING

GABION

TYPICAL CROSS SECTION OF SIDE SLOPE IN DRY CONDITION (BATTER 6 DEGREE)

DESIGNED : D.O.H. & CONSULTANTS	**CHECKED :** BUREAU OF LOCATION & DESIGN	**DATE :** OCT 2015
SUBMITTED : (DIRECTOR OF LOCATION & DESIGN BUREAU)		**SCALE :** AS SHOWN
		DWG NO. SP–604
APPROVED : (FOR DIRECTOR GENERAL)		**SHEET NO.** 149

D:\std dwg 2015\SP-604(REV00)

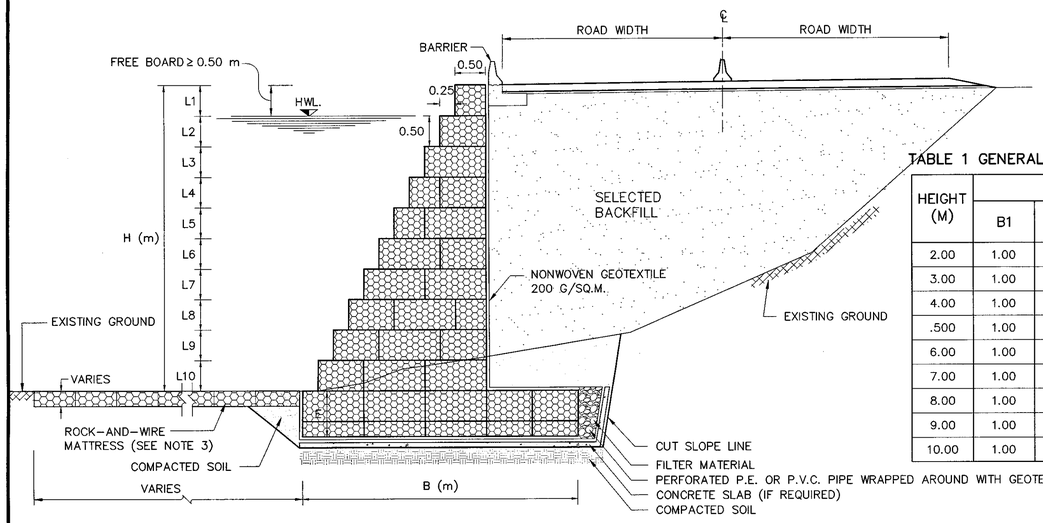

TABLE 1 GENERAL ARRANGEMENT OF GABION BASKET IN EACH LAYER

HEIGHT (M)	WIDTH OF EACH LAYER (B) FROM UPPERMOST TO THE BASE (METER)											QUANTITY OF GABION USED, BASKETS				ALLOWABLE BEARING CAPACITY (MIN) (KN/M^2)
	B1	B2	B3	B4	B5	B6	B7	B8	B9	B10	B11	1.50 x 1.00 x 0.50 (m)	2.00 x 1.00 x 0.50 (m)	1.50 x 1.00 x 1.00 (m)	2.00 x 1.00 x 1.00 (m)	
2.00	1.00	1.50	2.00									–	1.00	1.00	0.50	70
3.00	1.00	1.50	2.00	3.50								1.00	1.00	1.00	1.50	90
4.00	1.00	1.50	2.00	2.50	4.00							–	–	2.00	4.00	105
.500	1.00	1.50	2.00	2.50	3.00	5.50						–	–	3.00	5.50	125
6.00	1.00	1.50	2.00	2.50	3.00	3.50	6.00					–	–	3.00	7.50	145
7.00	1.00	1.50	2.00	2.50	3.00	3.50	4.00	6.50				–	–	4.00	9.00	160
8.00	1.00	1.50	2.00	2.50	3.00	3.50	4.00	4.50	8.00			–	4.00	4.00	12.00	180
9.00	1.00	1.50	2.00	2.50	3.00	3.50	4.00	4.50	5.00	8.50		3.00	2.00	9.00	11.00	200
10.00	1.00	1.50	2.00	2.50	3.00	3.50	4.00	4.50	5.00	5.50	9.00	2.00	3.00	9.00	14.00	215

LEGENDS:

– EMBEDED LAYER (E) TO THE EXISTING GROUND 0.50 M

– EMBEDED LAYER (E) TO THE EXISTING GROUND 1.00 M

– EMBEDED LAYER (E) TO THE EXISTING GROUND 1.50 M

TYPICAL CROSS SECTION OF GABION WALL LOCATED AT SIDE SLOPE ADJACENT TO WATERFRONT (ANGLE OF BATTER 0 DEGREE)

SCALE 1 : 50

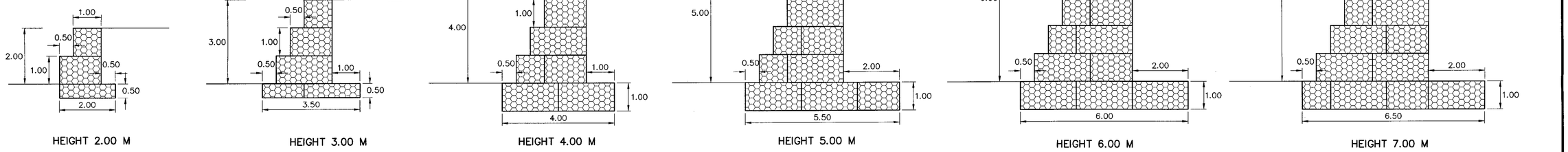

GENERAL ARRANGEMENT OF GABION BASKET FOR GABION WALL HEIGHT 2.00 TO 7.00 M

SCALE 1 : 100

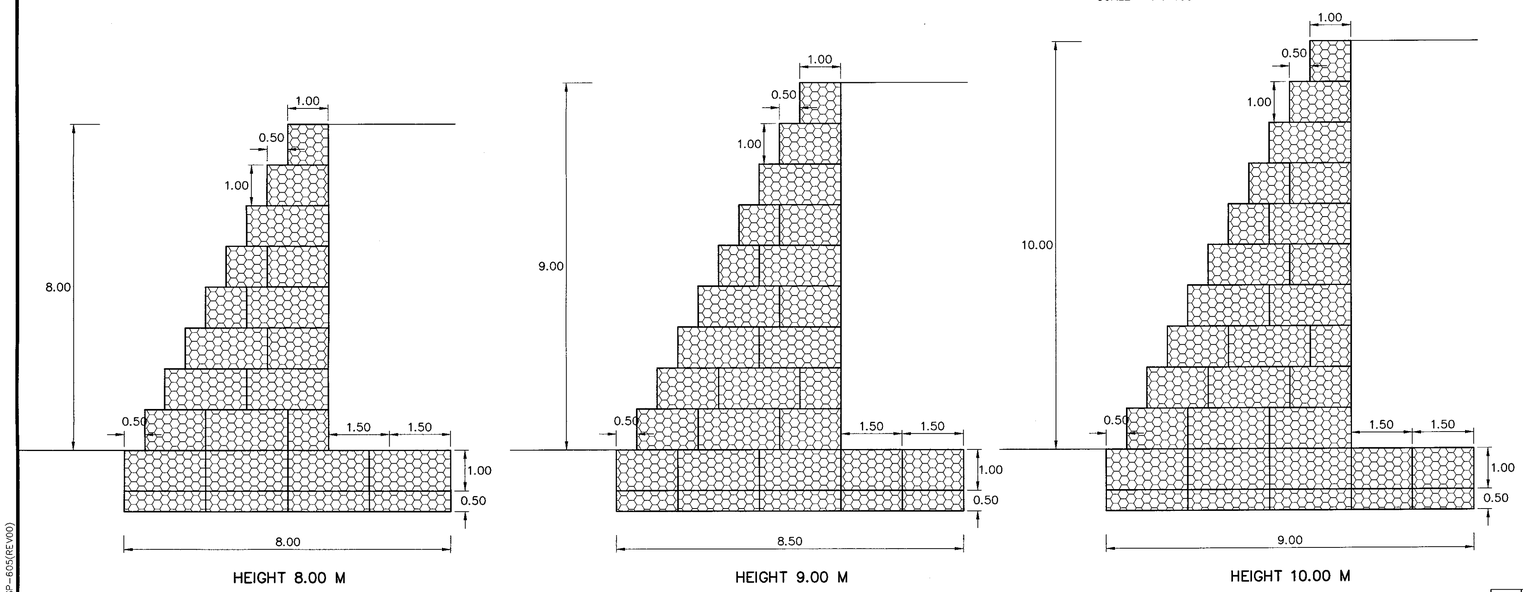

GENERAL ARRANGEMENT OF GABION BASKET FOR GABION WALL HEIGHT 8.00 TO 10.00 M

SCALE 1 : 75

NOTES :

1. ALL DIMENSIONS SHOWN ARE IN METERS, UNLESS OTHERWISE INDICATED.
2. THE SHAPE AND NUMBER OF GABION BASKET AS SHOWN IN THE TABLE 1 ARE ONLY RECOMMENDATION. THE CONTRACTOR SHALL SUBMIT COMPLETE DESIGN COMPUTATION.
3. IN CASE OF SEVERE EROSION, ROCK-AND-WIRE MATTRESS OR OTHER PROTECTION METHOD AT TOE SHALL BE PROVIDED AT TOE SLOPE.
4. CONTRACTOR SHALL SUBMIT COMPLETE DESIGN COMPUTATIONS, SOIL INVESTIGATION REPORT AND SHOP DRAWING TO ENGINEER FOR APPROVAL BEFORE BEGINNING OF THE CONSTRUCTION.
5. SOIL BORING INVESTIGATION SHALL BE CONDUCTED APPROXIMATELY AT 200 M INTERVAL. IN CASE OF COMPLEX GEOLOGICAL CONDITION, ADDITIONAL BOREHOLE SHALL BE REQUIRED AS DIRECTED BY THE ENGINEER.
6. PLATE LOAD TEST (ASTM 1194-94) SHALL BE CARRIED OUT TO CONFIRM BEARING CAPACITY OF FOUNDATION SOIL. FACTOR OF SAFETY OF AT LEAST 3.0 SHALL BE USED.
7. SELECTED BACKFILL SHALL CONFORM TO STANDARD NO. DH-S 105/2550.
8. NORMALLY, THE GABION WALL SHALL BE CONSTRUCTED DURING THE DRY SEASON WHERE THE WATER IN THE CANAL OR RIVER DOES NOT EXIST. HOWEVER, IN CASE OF PERSENCE OF WATER DURING THE DRY SEASON, ROCK RIPRAP, GRAVEL SACK GABION SHALL BE REQUIRED TO FILL UP THE BASE OF GABION ABOVE THE WATER LEVEL PRIOR TO THE CONSTRUCTION OF GABION WALL.

REF.	REVISION	SIGNATURE	DATE

KINGDOM OF THAILAND

MINISTRY OF TRANSPORT

DEPARTMENT OF HIGHWAYS

STANDARD DRAWING

GABION

TYPICAL CROSS SECTION OF SIDE SLOPE ADJACENT TO WATERFRONT (BATTER 0 DEGREE)

DESIGNED : D.O.H. & CONSULTANTS	CHECKED : BUREAU OF LOCATION & DESIGN	DATE : OCT 2015
SUBMITTED : (DIRECTOR OF LOCATION & DESIGN BUREAU)		SCALE : AS SHOWN
APPROVED : (FOR DIRECTOR GENERAL)		DWG NO. SP-605
		SHEET NO. 150

D:\std dwg 2015\SP-605(REV00)

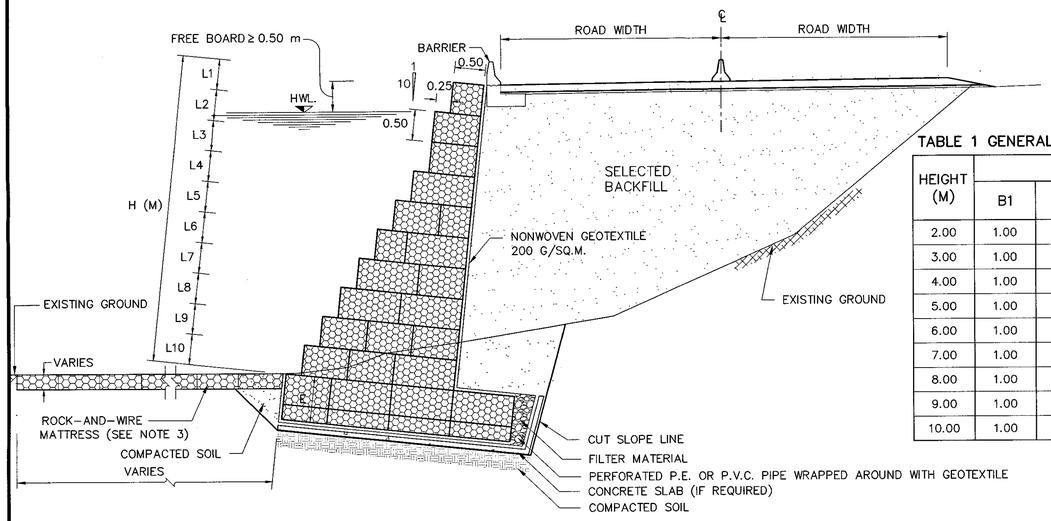

TABLE 1 GENERAL ARRANGEMENT OF GABION BASKET IN EACH LAYER

HEIGHT (M)	WIDTH OF EACH LAYER (B) FROM UPPERMOST TO THE BASE (METER)											QUANTITY OF GABION USED, BASKETS				ALLOWABLE BEARING CAPACITY (MIN) (KN/M^2)
	B1	B2	B3	B4	B5	B6	B7	B8	B9	B10	B11	1.50 x 1.00 x 0.50 (m)	2.00 x 1.00 x 0.50 (m)	1.50 x 1.00 x 1.00 (m)	2.00 x 1.00 x 1.00 (m)	
2.00	1.00	1.50	1.50									1.00	–	1.00	0.50	70
3.00	1.00	1.50	1.50	3.00								2.00	–	2.00	0.50	90
4.00	1.00	1.50	1.50	2.00	3.50							1.00	1.00	2.00	1.50	105
5.00	1.00	1.50	1.50	2.00	2.50	4.00						–	–	3.00	4.00	125
6.00	1.00	1.50	1.50	2.00	2.50	3.00	5.00					–	–	5.00	4.50	145
7.00	1.00	1.50	1.50	2.00	2.50	3.00	3.50	5.50				–	–	5.00	6.50	160
8.00	1.00	1.50	1.50	2.00	2.50	3.00	3.50	4.00	6.50			1.00	2.50	5.00	9.00	180
9.00	1.00	1.50	1.50	2.00	2.50	3.00	3.50	4.00	4.50	7.00		–	3.50	7.00	10.00	200
10.00	1.00	1.50	1.50	2.00	2.50	3.00	3.50	4.00	4.50	5.00	7.50	1.00	3.00	10.00	10.50	215

LEGENDS:

– EMBEDED LAYER (E) TO THE EXISTING GROUND 0.50 M

– EMBEDED LAYER (E) TO THE EXISTING GROUND 1.00 M

– EMBEDED LAYER (E) TO THE EXISTING GROUND 1.50 M

TYPICAL CROSS SECTION OF GABION WALL LOCATED AT SIDE SLOPE ADJACENT TO WATERFRONT (ANGLE OF BATTER 6 DEGREE)

SCALE 1 : 50

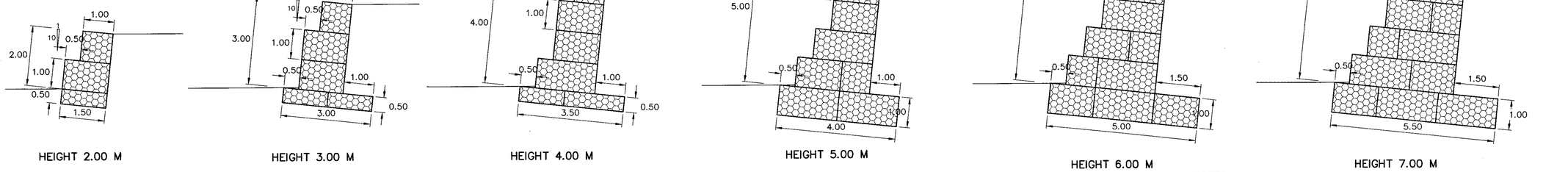

HEIGHT 2.00 M | HEIGHT 3.00 M | HEIGHT 4.00 M | HEIGHT 5.00 M | HEIGHT 6.00 M | HEIGHT 7.00 M

GENERAL ARRANGEMENT OF GABION BASKET FOR GABION WALL HEIGHT 2.00 TO 7.00 M

SCALE 1 : 100

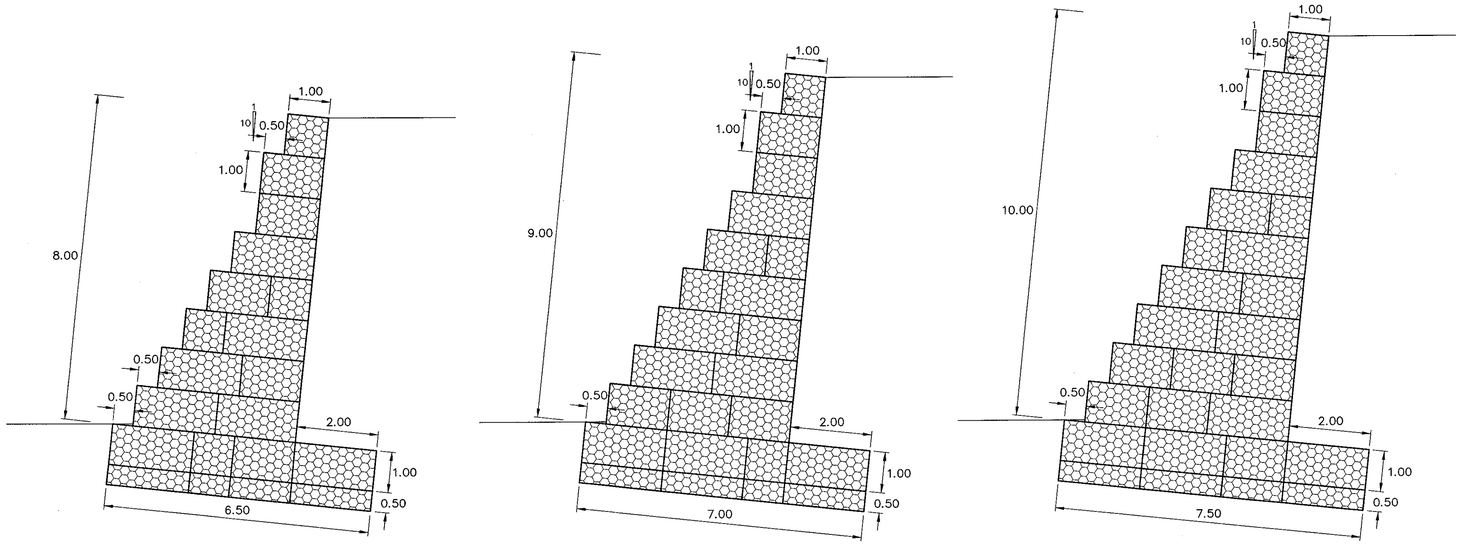

HEIGHT 8.00 M | HEIGHT 9.00 M | HEIGHT 10.00 M

GENERAL ARRANGEMENT OF GABION BASKET FOR GABION WALL HEIGHT 8.00 TO 10.00 M

SCALE 1 : 75

NOTES :

1. ALL DIMENSIONS SHOWN ARE IN METERS, UNLESS OTHERWISE INDICATED.
2. THE SHAPE AND NUMBER OF GABION BASKET AS SHOWN IN THE TABLE 1 ARE ONLY RECOMMENDATION. THE CONTRACTOR SHALL SUBMIT COMPLETE DESIGN COMPUTATION.
3. IN CASE OF SEVERE EROSION, ROCK-AND-WIRE MATTRESS OR OTHER PROTECTION METHOD AT TOE SHALL BE PROVIDED AT TOE SLOPE.
4. CONTRACTOR SHALL SUBMIT COMPLETE DESIGN COMPUTATIONS, SOIL INVESTIGATION REPORT AND SHOP DRAWING TO ENGINEER FOR APPROVAL BEFORE BEGINNING OF THE CONSTRUCTION.
5. SOIL BORING INVESTIGATION SHALL BE CONDUCTED APPROXIMATELY AT 200 M INTERVAL. IN CASE OF COMPLEX GEOLOGICAL CONDITION, ADDITIONAL BOREHOLE SHALL BE REQUIRED AS DIRECTED BY THE ENGINEER.
6. PLATE LOAD TEST (ASTM 1194-94) SHALL BE CARRIED OUT TO CONFIRM BEARING CAPACITY OF FOUNDATION SOIL. FACTOR OF SAFETY OF AT LEAST 3.0 SHALL BE USED.
7. SELECTED BACKFILL SHALL CONFORM TO STANDARD NO. DH-S 105/2550.
8. NORMALLY, THE GABION WALL SHALL BE CONSTRUCTED DURING THE DRY SEASON WHERE THE WATER IN THE CANAL OR RIVER DOES NOT EXIST. HOWEVER, IN CASE OF PERSENCE OF WATER DURING THE DRY SEASON, ROCK RIPRAP, GRAVEL SACK GABION SHALL BE REQUIRED TO FILL UP THE BASE OF GABION ABOVE THE WATER LEVEL PRIOR TO THE CONSTRUCTION OF GABION WALL.

REF.	REVISION	SIGNATURE	DATE

KINGDOM OF THAILAND

MINISTRY OF TRANSPORT

DEPARTMENT OF HIGHWAYS

STANDARD DRAWING

GABION

TYPICAL CROSS SECTION OF SIDE SLOPE ADJACENT TO WATERFRONT (BATTER 6 DEGREE)

DESIGNED : D.O.H. & CONSULTANTS	CHECKED : BUREAU OF LOCATION & DESIGN	DATE : OCT 2015
SUBMITTED : (DIRECTOR OF LOCATION & DESIGN BUREAU)		SCALE : AS SHOWN
APPROVED : (FOR DIRECTOR GENERAL)		DWG NO. SP-606
		SHEET NO. 151

D:\std dwg 2015\SP-606(REV00)

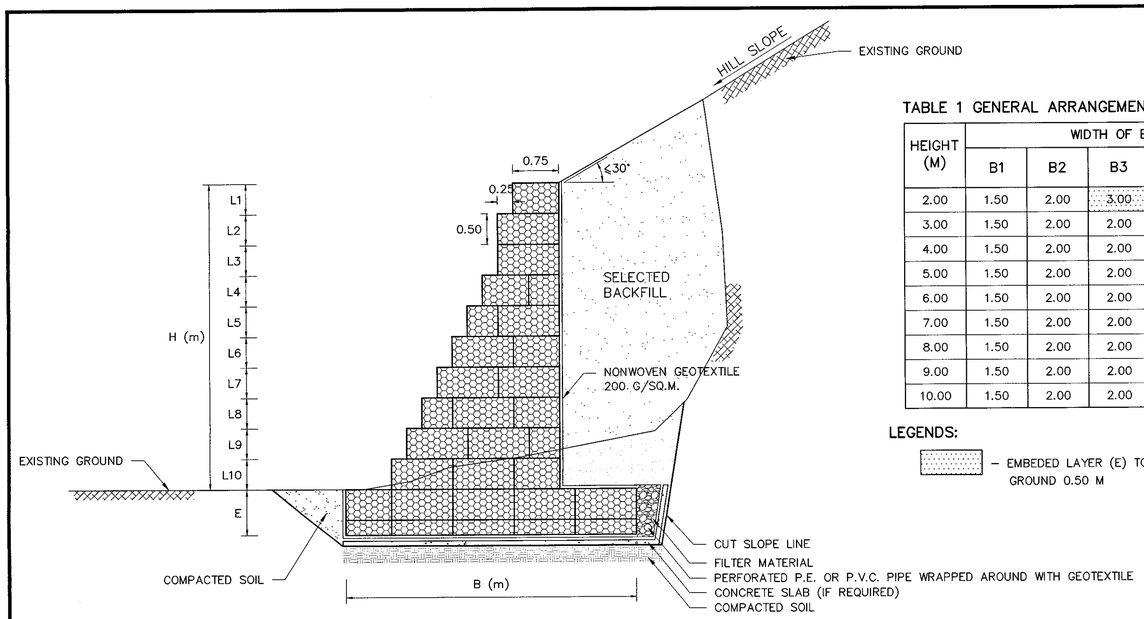

TYPICAL CROSS SECTION OF GABION WALL LOCATED AT BACKSLOPE (ANGLE OF BATTER 0 DEGREE)

SCALE 1 : 50

TABLE 1 GENERAL ARRANGEMENT OF GABION BASKET IN EACH LAYER

HEIGHT (M)	WIDTH OF EACH LAYER (B) FROM UPPERMOST TO THE BASE (METER)											QUANTITY OF GABION USED, BASKETS				ALLOWABLE BEARING CAPACITY (MIN) (KN/M^2)
	B1	B2	B3	B4	B5	B6	B7	B8	B9	B10	B11	1.50 x 1.00 x 0.50 (m)	2.00 x 1.00 x 0.50 (m)	1.50 x 1.00 x 1.00 (m)	2.00 x 1.00 x 1.00 (m)	
2.00	1.50	2.00	3.00									2.00	–	1.00	1.00	70
3.00	1.50	2.00	2.00	3.50								1.00	1.00	1.00	2.00	90
4.00	1.50	2.00	2.00	2.50	4.00							–	2.00	2.00	2.05	105
5.00	1.50	2.00	2.00	2.50	3.00	4.50						–	–	2.00	7.00	125
6.00	1.50	2.00	2.00	2.50	3.00	3.50	6.50					–	–	4.00	7.05	145
7.00	1.50	2.00	2.00	2.50	3.00	3.50	4.00	7.00				–	–	5.00	9.00	160
8.00	1.50	2.00	2.00	2.50	3.00	3.50	4.00	4.50	8.00			–	4.00	4.00	12.05	180
9.00	1.50	2.00	2.00	2.50	3.00	3.50	4.00	4.50	5.00	8.50		3.00	2.00	9.00	11.05	200
10.00	1.50	2.00	2.00	2.50	3.00	3.50	4.00	4.50	5.00	5.50	9.00	2.00	3.00	9.00	14.05	215

LEGENDS:

– EMBEDED LAYER (E) TO THE EXISTING GROUND 0.50 M

– EMBEDED LAYER (E) TO THE EXISTING GROUND 1.00 M

– EMBEDED LAYER (E) TO THE EXISTING GROUND 1.50 M

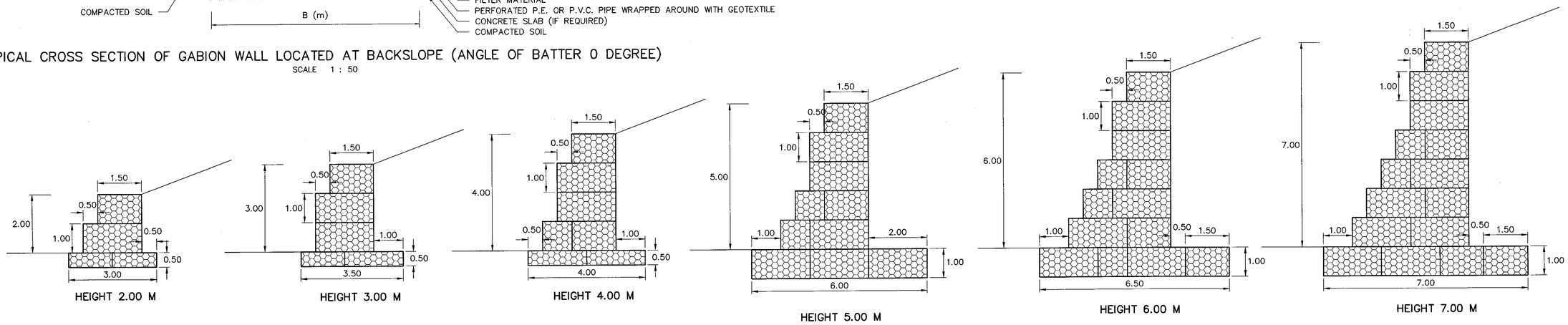

GENERAL ARRANGEMENT OF GABION BASKET FOR GABION WALL HEIGHT 2.00 TO 7.00 M

SCALE 1 : 100

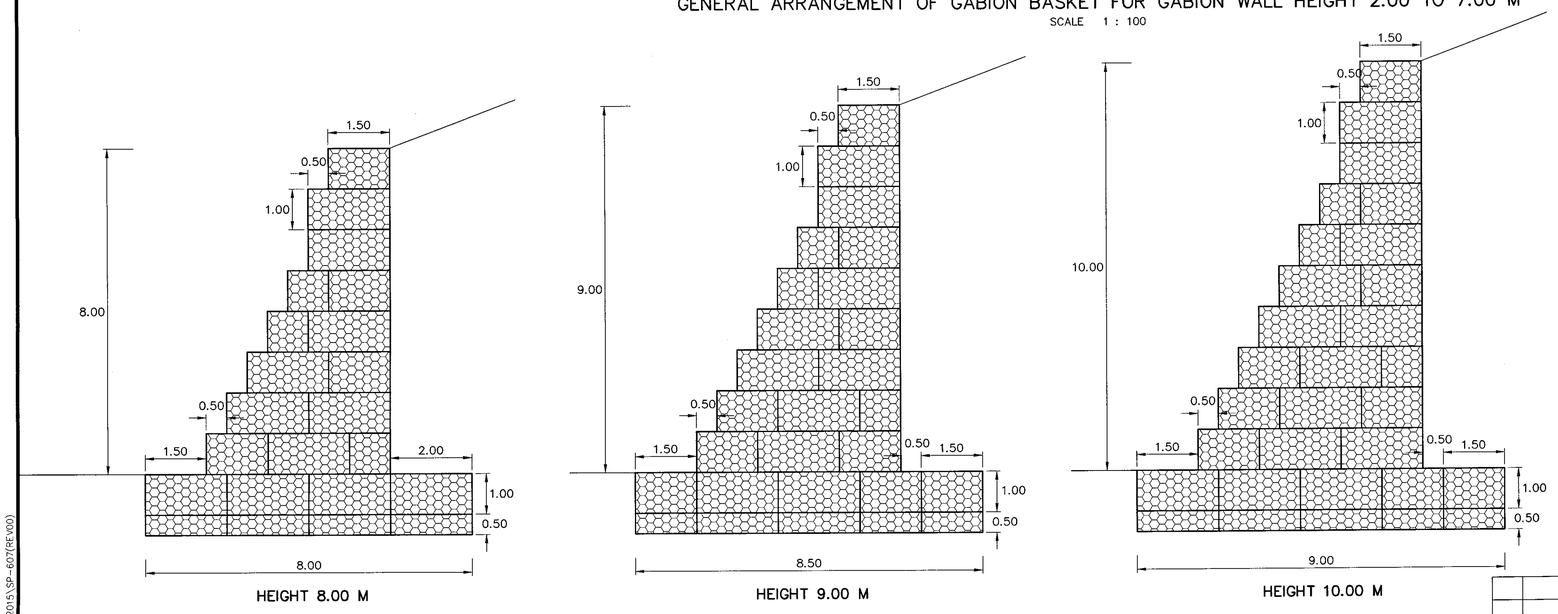

GENERAL ARRANGEMENT OF GABION BASKET FOR GABION WALL HEIGHT 8.00 TO 10.00 M

SCALE 1 : 75

NOTES :

1. ALL DIMENSIONS SHOWN ARE IN METERS, UNLESS OTHERWISE INDICATED.
2. THE SHAPE AND NUMBER OF GABION BASKET AS SHOWN IN THE TABLE 1 ARE ONLY RECOMMENDATION. THE CONTRACTOR SHALL SUBMIT COMPLETE DESIGN COMPUTATION.
3. CONTRACTOR SHALL SUBMIT COMPLETE DESIGN COMPUTATIONS, SOIL INVESTIGATION REPORT AND SHOP DRAWING TO ENGINEER FOR APPROVAL BEFORE BEGINNING OF THE CONSTRUCTION.
4. SOIL BORING INVESTIGATION SHALL BE CONDUCTED APPROXIMATELY AT 200 M INTERVAL. IN CASE OF COMPLEX GEOLOGICAL CONDITION, ADDITIONAL BOREHOLE SHALL BE REQUIRED AS DIRECTED BY THE ENGINEER.
5. PLATE LOAD TEST (ASTM 1194–94) SHALL BE CARRIED OUT TO CONFIRM BEARING CAPACITY OF FOUNDATION SOIL. FACTOR OF SAFETY OF AT LEAST 3.0 SHALL BE USED.
6. SELECTED BACKFILL SHALL CONFORM TO STANDARD NO. DH–S 105/2550.

KINGDOM OF THAILAND

MINISTRY OF TRANSPORT

DEPARTMENT OF HIGHWAYS

STANDARD DRAWING

GABION

TYPICAL CROSS SECTION OF BACK SLOPE (BATTER 0 DEGREE)

DESIGNED : D.O.H. & CONSULTANTS	CHECKED : BUREAU OF LOCATION DESIGN	DATE : OCT 2015	
SUBMITTED : (DIRECTOR OF LOCATION & DESIGN BUREAU)		SCALE : AS SHOWN	
APPROVED : (FOR DIRECTOR GENERAL)		DWG NO. SP–607	
		SHEET NO. 152	

REF.	REVISION	SIGNATURE	DATE

D:\std dwg 2015\SP-607(REV00)

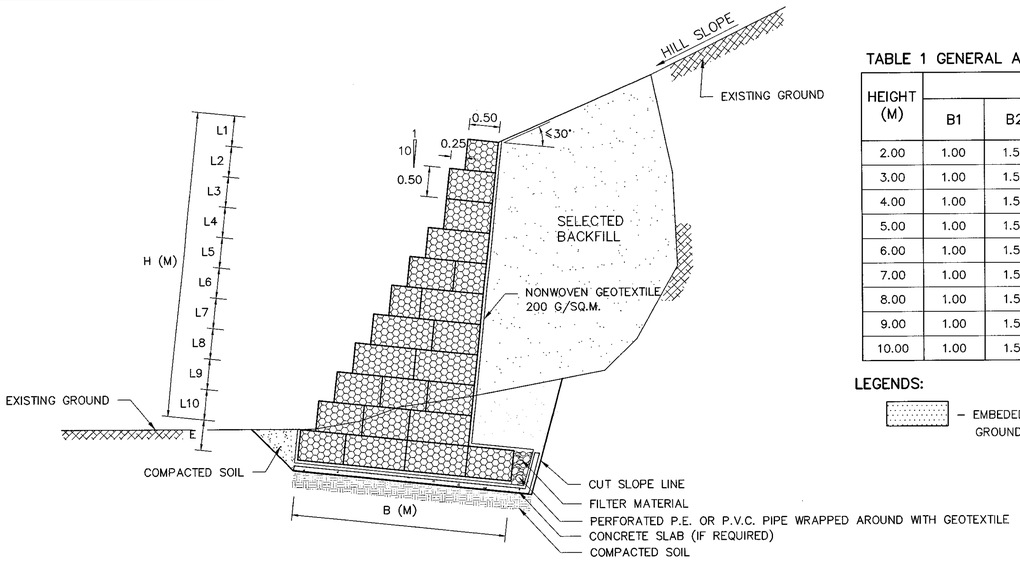

TYPICAL CROSS SECTION OF GABION WALL LOCATED AT BACKSLOPE (ANGLE OF BATTER 6 DEGREES)

SCALE 1 : 50

TABLE 1 GENERAL ARRANGEMENT OF GABION BASKET IN EACH LAYER

HEIGHT (M)	WIDTH OF EACH LAYER (B) FROM UPPERMOST TO THE BASE (METER)											QUANTITY OF GABION USED, BASKETS				ALLOWABLE BEARING CAPACITY (MIN) (KN/M^2)
	B1	B2	B3	B4	B5	B6	B7	B8	B9	B10	B11	1.50 x 1.00 x 0.50 (m)	2.00 x 1.00 x 0.50 (m)	1.50 x 1.00 x 1.00 (m)	2.00 x 1.00 x 1.00 (m)	
2.00	1.00	1.50										–	–	1.00	0.50	70
3.00	1.00	1.50	1.50	2.00								–	1.00	2.00	0.50	90
4.00	1.00	1.50	1.50	2.00	3.50							1.00	1.00	2.00	1.50	105
5.00	1.00	1.50	1.50	2.00	2.50	4.00						–	2.00	3.00	2.00	125
6.00	1.00	1.50	1.50	2.00	2.50	3.00	4.50					–	–	4.00	5.00	145
7.00	1.00	1.50	1.50	2.00	2.50	3.00	3.50	5.50				–	–	5.00	6.50	160
8.00	1.00	1.50	1.50	2.00	2.50	3.00	3.50	4.00	6.00			–	–	4.00	9.50	180
9.00	1.00	1.50	1.50	2.00	2.50	3.00	3.50	4.00	4.50	6.50		–	–	8.00	9.00	200
10.00	1.00	1.50	1.50	2.00	2.50	3.00	3.50	4.00	4.50	5.00	7.00	–	–	11.00	9.50	215

LEGENDS:

– EMBEDED LAYER (E) TO THE EXISTING GROUND 0.50 M

– EMBEDED LAYER (E) TO THE EXISTING GROUND 1.00 M

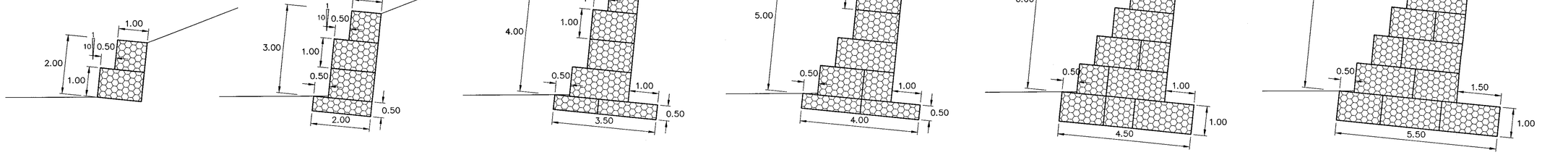

HEIGHT 2.00 M | HEIGHT 3.00 M | HEIGHT 4.00 M | HEIGHT 5.00 M | HEIGHT 6.00 M | HEIGHT 7.00 M

GENERAL ARRANGEMENT OF GABION BASKET FOR GABION WALL HEIGHT 2.00 TO 7.00 M

SCALE 1 : 75

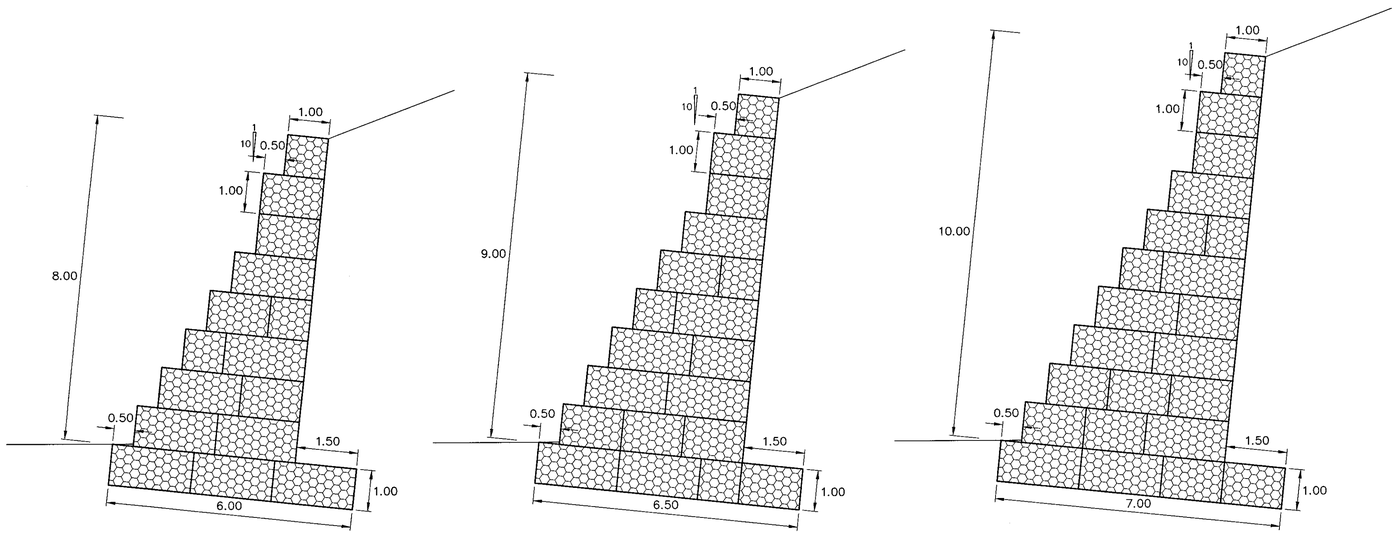

HEIGHT 8.00 M | HEIGHT 9.00 M | HEIGHT 10.00 M

GENERAL ARRANGEMENT OF GABION BASKET FOR GABION WALL HEIGHT 8.00 TO 10.00 M

SCALE 1 : 75

NOTES :

1. ALL DIMENSIONS SHOWN ARE IN METERS, UNLESS OTHERWISE INDICATED.
2. THE SHAPE AND NUMBER OF GABION BASKET AS SHOWN IN THE TABLE 1 ARE ONLY RECOMMENDATION. THE CONTRACTOR SHALL SUBMIT COMPLETE DESIGN COMPUTATION.
3. CONTRACTOR SHALL SUBMIT COMPLETE DESIGN COMPUTATIONS, SOIL INVESTIGATION REPORT AND SHOP DRAWING TO ENGINEER FOR APPROVAL BEFORE BEGINNING OF THE CONSTRUCTION.
4. SOIL BORING INVESTIGATION SHALL BE CONDUCTED APPROXIMATELY AT 200 M INTERVAL. IN CASE OF COMPLEX GEOLOGICAL CONDITION, ADDITIONAL BOREHOLE SHALL BE REQUIRED AS DIRECTED BY THE ENGINEER.
5. PLATE LOAD TEST (ASTM 1194–94) SHALL BE CARRIED OUT TO CONFIRM BEARING CAPACITY OF FOUNDATION SOIL. FACTOR OF SAFETY OF AT LEAST 3.0 SHALL BE USED.
6. SELECTED BACKFILL SHALL CONFORM TO STANDARD NO. DH–S 105/2550.

REF.	REVISION	SIGNATURE	DATE

KINGDOM OF THAILAND

MINISTRY OF TRANSPORT

DEPARTMENT OF HIGHWAYS

STANDARD DRAWING

GABION

TYPICAL CROSS SECTION OF BACK SLOPE (BATTER 6 DEGREE)

DESIGNED : D.O.H. & CONSULTANTS	CHECKED : BUREAU OF LOCATION & DESIGN	DATE : OCT 2015
SUBMITTED : (DIRECTOR OF LOCATION & DESIGN BUREAU)		SCALE : AS SHOWN
APPROVED : (FOR DIRECTOR GENERAL)		DWG NO. SP–608
		SHEET NO. 153

D:\std dwg 2015\SP-608(REV00)

SUBDRAIN – LONNGITUDINAL DRAIN UNDER SIDE DITCH

RECOMMENDATION FOR SUBDRAIN – TYPE 1 WITH SAND FILTER

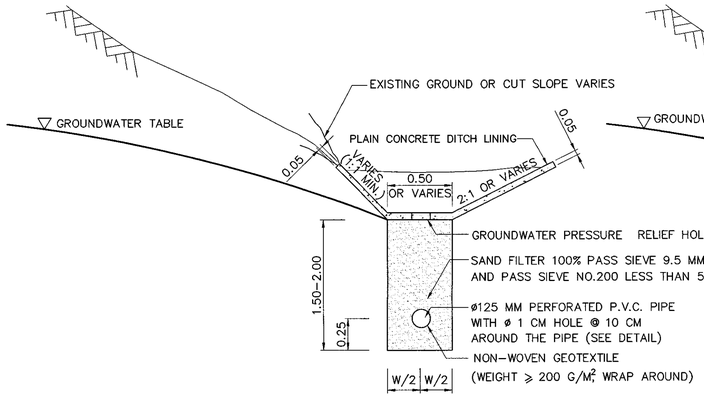

DETAIL OF SUBDRAIN OPTION "A"

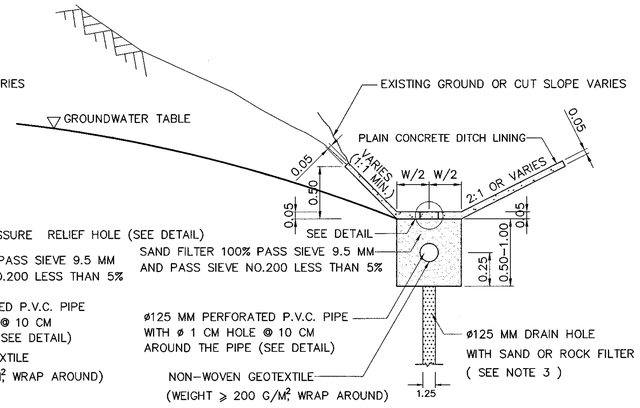

DETAIL OF SUBDRAIN OPTION "B"

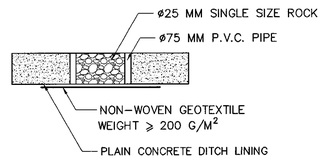

DETAIL OF GROUNDWATER PRESSURE RELIEF HOLE

RECOMMENDATION FOR SUBDRAIN – TYPE II WITH ROCK FILTER

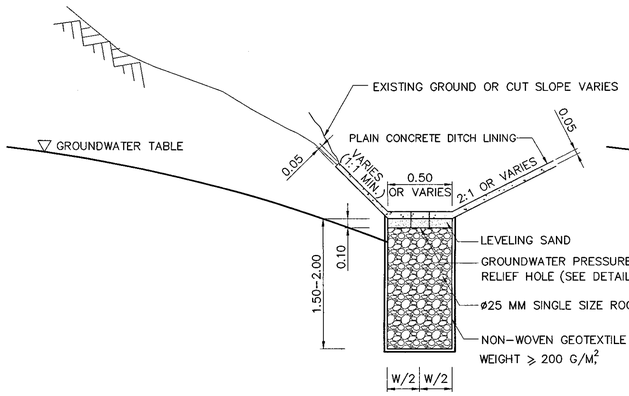

DETAIL OF SUBDRAIN OPTION "A"

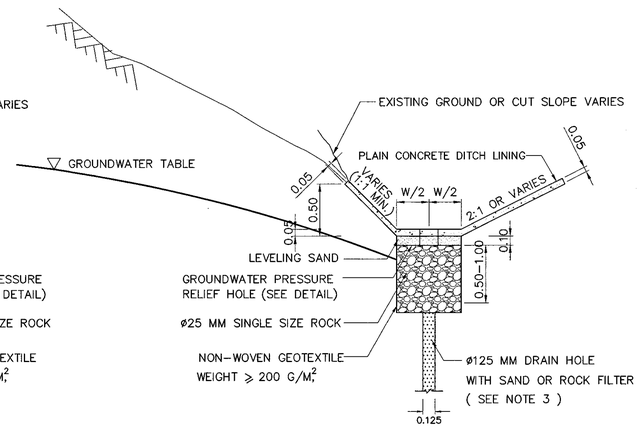

DETAIL OF SUBDRAIN OPTION "B"

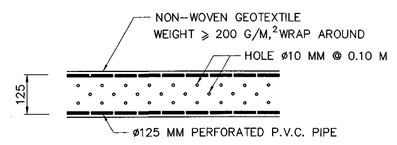

DETAIL OF PERFORATED P.V.C. PIPE CLASS 13.5

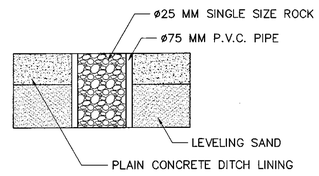

DETAIL OF GROUDWATER PRESSURE RELIEF HOLE

NOTES

1. ALL DIMENSION ARE IN METERS UNLESS OTHERWISE INDICATED.
2. SUBDRAIN IS USED FOR LOWERING GROUNDWATER TABLE TO PREVENT SEEPAGE UNDER ROAD SURFACE, GENERALLY INSTALLED AT TOE OF BACK SLOPE AND BENEATH SIDE DITCH
3. TWO OPTIONS OF SUBDRAIN OPTION "A" AND OPTION "B" CAN BE USED
4. SELECTION OF SUBDRAIN SHOULD BE CONSIDERED
   - 4.1 OPTION "A" IS SUITABLE FOR SOIL FOUNDATION, EASY FOR EXCAVATION OR SHALLOW GROUNDWATER TABLE (DEPTH LESS THAN 2.0 M)
   - 4.2 OPTION "B" IS SUITABLE FOR WEATHERED ROCK OR HARD SOIL FOUNDATION, DIFFICULT FOR EXCAVATION OR GROUNDWATER TABLE IS DEEPER THAN 2.0 M
5. CONSTRUCTION OF SUBDRAIN OPTION "B" THE DRAIN HOLE SHALL BE DRILLED TO THE GROUNDWATER TABLE OR AS DIRECTED BY THE ENGINEER, THEN POUR SAND FILTER (100% PASS SIEVE 9.5 MM AND PASS SIEVE NO.200 LESS THAN 5%) OR ROCK FILTER WITH 9.5–19 MM DIAMETER INTO THE DRAIN HOLE
6. THE MINIMUM DIAMETER OF LONGITUDINAL DRAINAGE PIPE IS 0.10 M. INSTALLED WITH A GRADIENT OF ABOUT 1–2%
7. INSTALL GROUNDWATER PRESSURE RELIEF HOLE ON SIDE DITCH EVERY 50 M ALONG THE DITCH OR AT THE LOCATION WHERE THE DISTANCE TO DRAIN CHUTE IS MORE THAN 50 M. AFTER DRILLING FILL THE TOP OF HOLE WITH GRAVEL
8. DETERMINATION OF FLOW AND QUANTITY OF GROUNDWATER AT SPECIFIC LOCATION IS NOT SIMPLE BECAUSE THE FLOW QUANTITY AND FLOW RATE IS VARIED WITH SEASON. DECISION TO USE THIS DRAWING CAN BE MADE BY EXCAVATING A DITCH WITH 1.00–1.50 M DEPTH AT TOE OF BACK SLOPE, LEFT IT OPEN AND CHECK, IF THERE IS GROUNDWATER SEEPAGE OR NOT
9. OTHER TYPES OF SUBDRAIN CAN BE SELECTED TO SUIT THE SITE CONDITION AS DIRECTED AND APPROVED BY THE ENGINEER
10. SLOT GROOVING CAN BE USED INSTEAD OF DRILLING HOLES, FOR LONGITUDINAL DRAINAGE PIPE THE GROOVING AREA SHALL NOT BE LESS THAN THE DRILLED AREA AS APPROVED BY THE ENGINEER

REF.	REVISION	SIGNATURE	DATE

KINGDOM OF THAILAND
MINISTRY OF TRANSPORT
DEPARTMENT OF HIGHWAYS

STANDARD DRAWING
SUBDRAIN
LONGITUDINAL DRAIN UNDER SIDE DITCH

DESIGNED : D.O.H. & CONSULTANTS	CHECKED : BUREAU OF LOCATION & DESIGN	DATE : OCT 2015
SUBMITTED : (DIRECTOR OF LOCATION & DESIGN BUREAU)		SCALE : AS SHOWN
APPROVED : (FOR DIRECTOR GENERAL)		DWG NO. SP–701
		SHEET NO. 154

D:\std dwg 2015\SP-701(REV00)

SUBDRAIN – HORIZONTAL DRAIN FOR CUT SLOPE

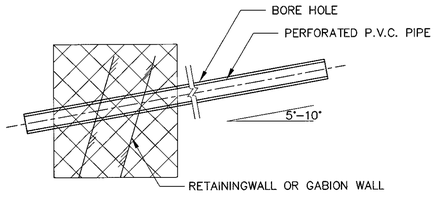

Figure 1 INCLINATION OF HORIZONTAL DRAIN HOLE

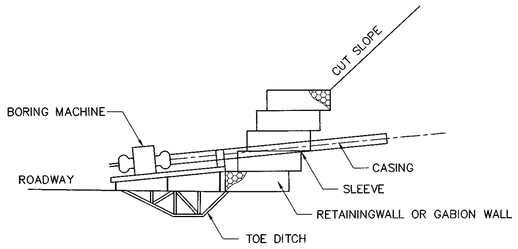

Figure 2 DRILLING MACHINE

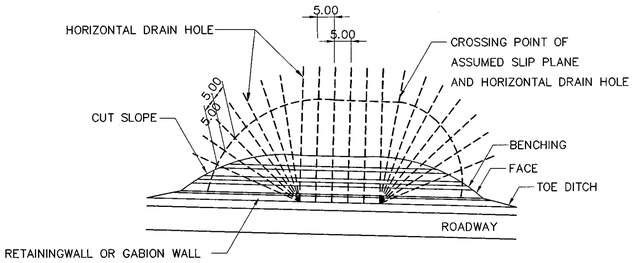

Figure 3 SPACING OF HORIZONTAL DRAIN HOLE

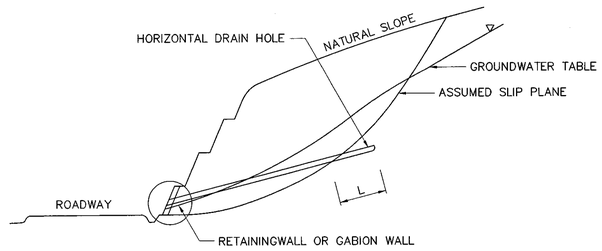

ORIGINAL GROUND CONDITION	L (M)
SOIL	5.00
ROCK	3.00

Figure 4 EXTENDED LENGTH BEYOND SLIP PLANE

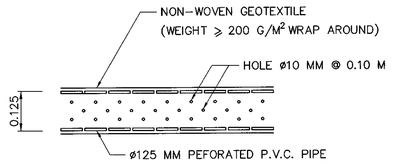

Figure 5 DETAILS OF PERFORATED P.V.C. PIPE CLASS 13.5

NOTES

1. ALL DIMENSION ARE IN METERS UNLESS OTHERWISE INDICATED
2. HORIZONTAL DRAIN IS USED FOR LOWERING GROUND WATER TABLE TO INCREASE SLOPE STABILITY.
3. IF NECESSARY, SOIL INVESTIGATION AND SLOPE STABILITY ANALYSIS SHALL BE CARRIED OUT TO VERIFY THE SLIP PLANE BEFORE THE INSTALLATION OF HORIZONTAL DRAIN.
4. SINCE SLOPE MOVEMENT CAN BE OCCURRED ALONG BOUNDARY OF SOIL /BEDROCK AND HIGHLY WEATHERED ROCK/MODERATELY WEATHERED ROCK, PERPENDICULAR SOIL DRILLING SHALL BE CARRIED OUT (AT LEAST 1 BOREHOLE) AT THE SLOPE WITH POTENTIAL FOR FAILURE TO VERIFY THE BOUNDARY.
5. THE MINIMUM DIAMETER OF HORIZONTAL DRAIN IS 0.1 M INSTALLED WITH A INCLINATION OF ABOUT 5–10 DEGREES (SEE FIGURE 1)
6. THE CONTRACTOR SHALL PROPOSE DRILLING PLAN AND TYPE OF DRILLING MACHINE FOR INSTALLATION OF HORIZONTAL DRAIN DRILLING. IF THE SOIL IN THAT AREA IS COMPOSED OF GRAVELLY SOIL, IT IS NECESSARY TO INSTALL CASING TO PREVENT COLLAPSE OF DRILLING HOLE.
7. SPACING OF HORIZONTAL DRAIN HOLE IS 5.00 M MAX. (SEE FIGURE 3)
8. PERFORATED P.V.C. PIPE CLASS 13.5 WITH 125 MM DIAMETER WRAP AROUND WITH NON–WOVEN GEOTEXTILE (WEIGHT > 200 G/M^2) SHALL BE USED FOR HORIZONTAL DRAIN.
9. DETERMINATION OF FLOW AND QUANTITY OF GROUND WATER AT SPECIFIC LOCATION IS NOT SIMPLE BECAUSE THE FLOW QUANTITY AND FLOW RATE IS VARIED WITH SEASON. DECISION TO USE THIS DRAWING CAN BE MADE BY INSTALLATION OF OBSERVATION WELL ON CUT SLOPE AND CHECK FOR GROUNDWATER TABLE.

REF.	REVISION	SIGNATURE	DATE

KINGDOM OF THAILAND
MINISTRY OF TRANSPORT
DEPARTMENT OF HIGHWAYS

STANDARD DRAWING

SUBDRAIN
HORIZONTAL DRAIN FOR CUT SLOPE

DESIGNED : D.O.H. & CONSULTANTS	CHECKED : BUREAU OF LOCATION & DESIGN	DATE : OCT 2015
SUBMITTED : (DIRECTOR OF LOCATION & DESIGN BUREAU)		SCALE : AS SHOWN
APPROVED : (FOR DIRECTOR GENERAL)		DWG NO. SP–702
		SHEET NO. 155

D:\std dwg 2015\SP-702(REV00)

SECTION 6) HIGHWAY ENVIRONMENTAL AND HANDICAP WALKWAY

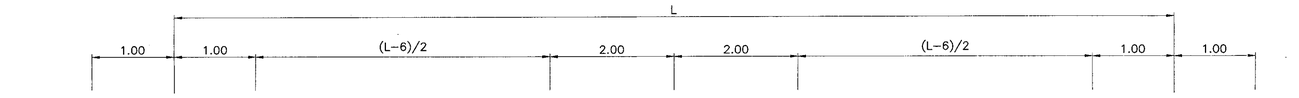

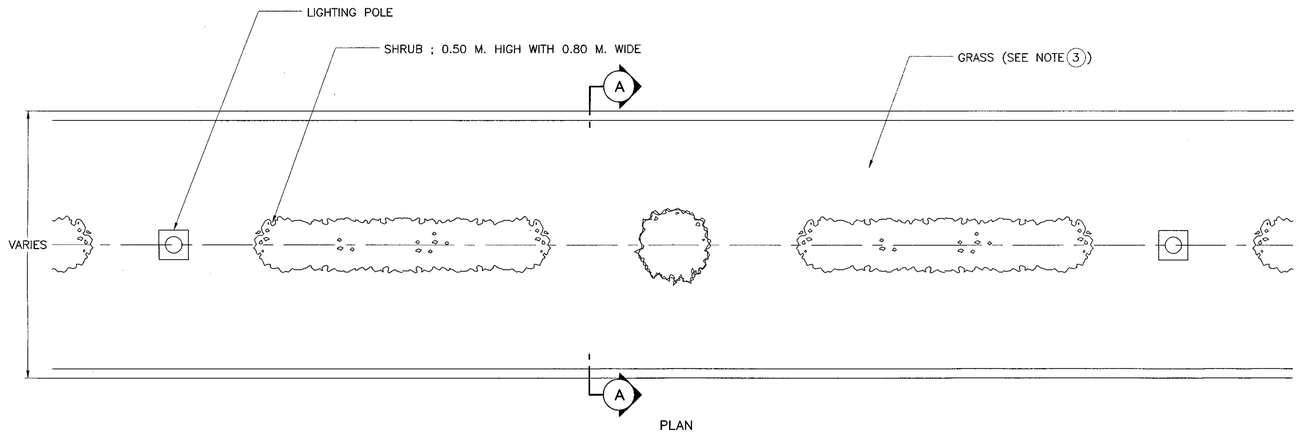

PLAN

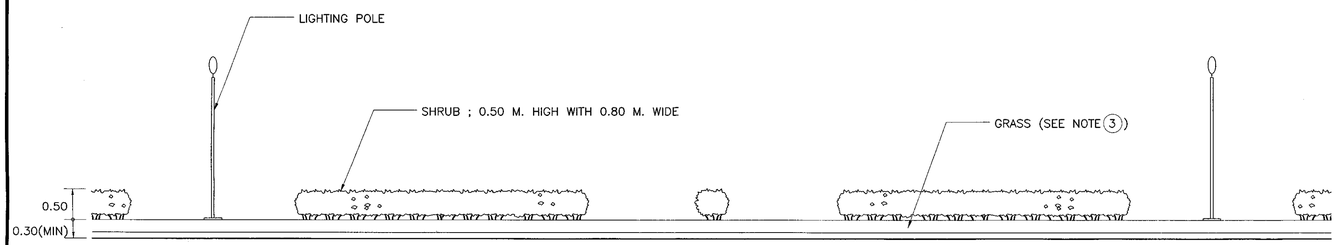

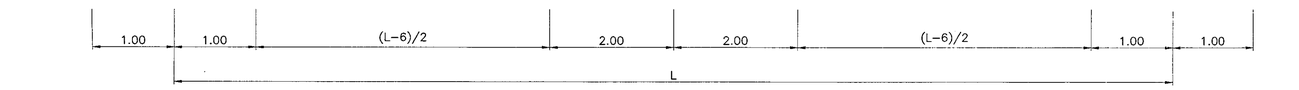

PROFILE

DETAIL OF PLANTING AT MEDIAN
NOT TO SCALE

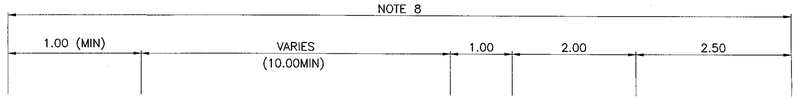

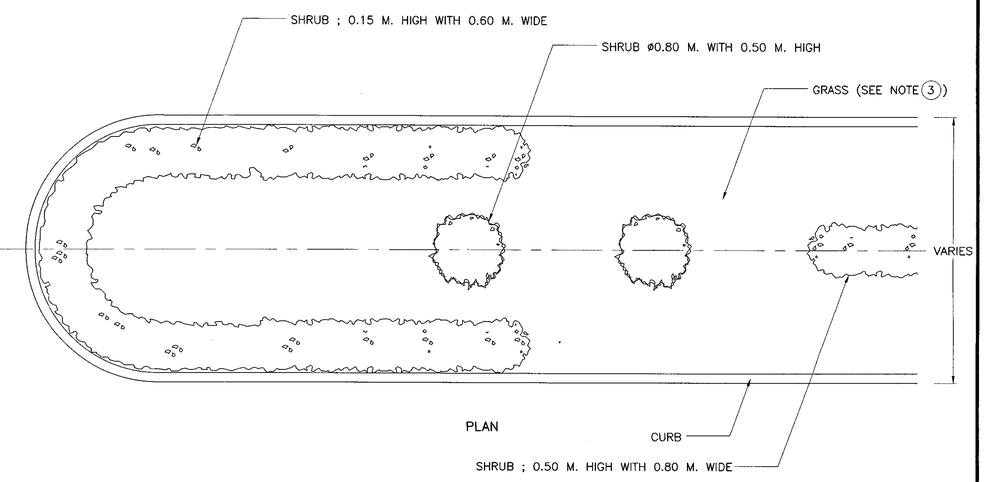

PLAN

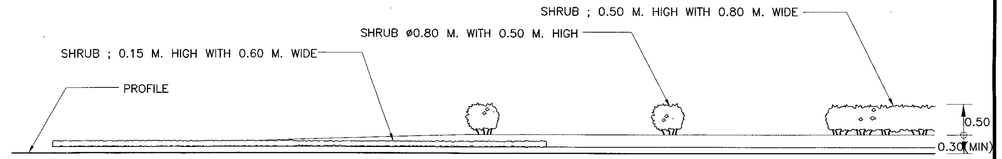



PROFILE

BEGINNING OF MEDIAN
NOT TO SCALE

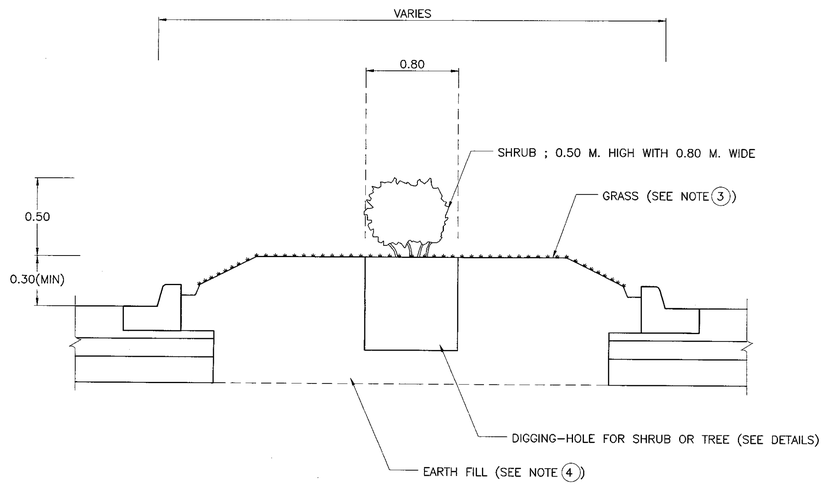

SECTION A – A
NOT TO SCALE

* THE DEPTH SHALL BE 0.30 M.
FOR SHRUB ; 0.15 HIGH WITH 0.60 M.
WIDE.

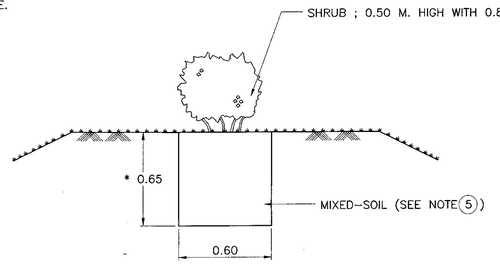

DETAIL OF DIGGING-HOLE FOR SHRUB
NOT TO SCALE

NOTE :

1. ALL DIMENSIONS ARE IN METERS UNLESS OTHERWISE INDICATED.
2. TREE AND SHRUB SHALL BE DIRECTED BY ENGINEERS OR OTHERWISE INDICATED IN DRAWINGS.
3. GRASS SHALL BE NUAL-NOI GRASS OR OTHERWISE INDICATED IN DRAWINGS.
4. EARTH FILL IN MEDIAN SHALL BE ORGANIC TOPSOIL THAI BE SUITABLE FOR GROWING GRASS.
5. MIXED-SOIL SHALL BE THE PROPORTION OF SOIL : FERTILIZER : SAND EQUAL TO 4:3:2 BY VOLUME
6. THE CONTRACTOR SHALL BE RESPONSIBLE FOR MAINTAINING THE PLANTS UNTIL THE END PERIOD AS SPECIFIED IN THE SPECIAL PROVISIONS.
7. ONLY FOR USED AS GUIDE LINE , IF OTHER SHALL BE FOLLOW "HIGHWAY ARCHITECTURE DESIGN."
8. PLANT WITH HEIGHT MORE THAN 0.80 , FROM PROFILE GRADE LEVEL , SHALL NOT BE PLACE IN THE BEGINNING OF MEDIAN

REF.	REVISION	SIGNATURE	DATE

KINGDOM OF THAILAND

MINISTRY OF TRANSPORT
DEPARTMENT OF HIGHWAYS

STANDARD DRAWING

PLANTING TREE AND GRASSING IN MEDIAN

DESIGNED : D.O.H. & CONSULTANTS	**CHECKED :** BUREAU OF LOCATION & DESIGN	**DATE :** OCT 2015
SUBMITTED : (DIRECTOR OF LOCATION & DESIGN BUREAU)		**SCALE :** AS SHOWN
APPROVED : (FOR DIRECTOR GENERAL)		**DWG NO.** EN-101
		SHEET NO. 156

D:\std dwg 2015\EN-101(REV00)

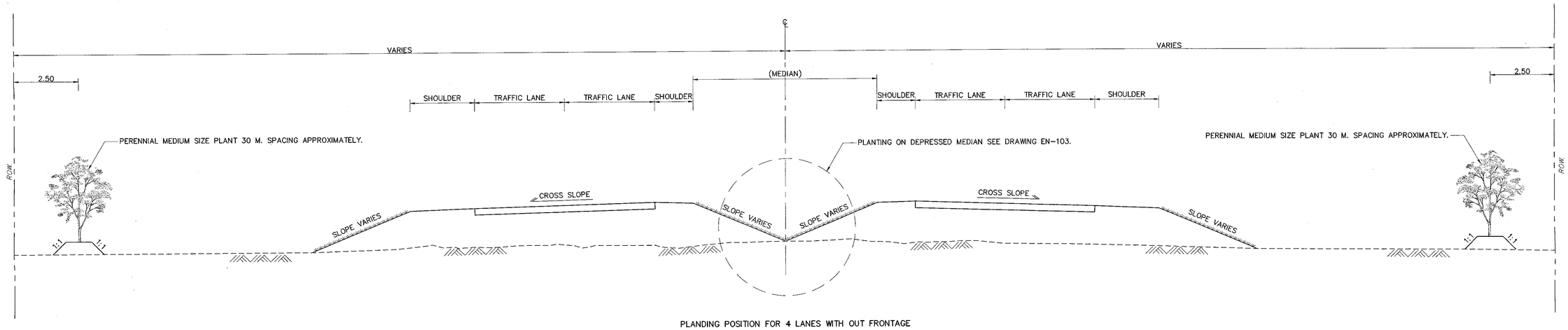

PLANDING POSITION FOR 4 LANES WITH OUT FRONTAGE
(FOR 4 LANES)

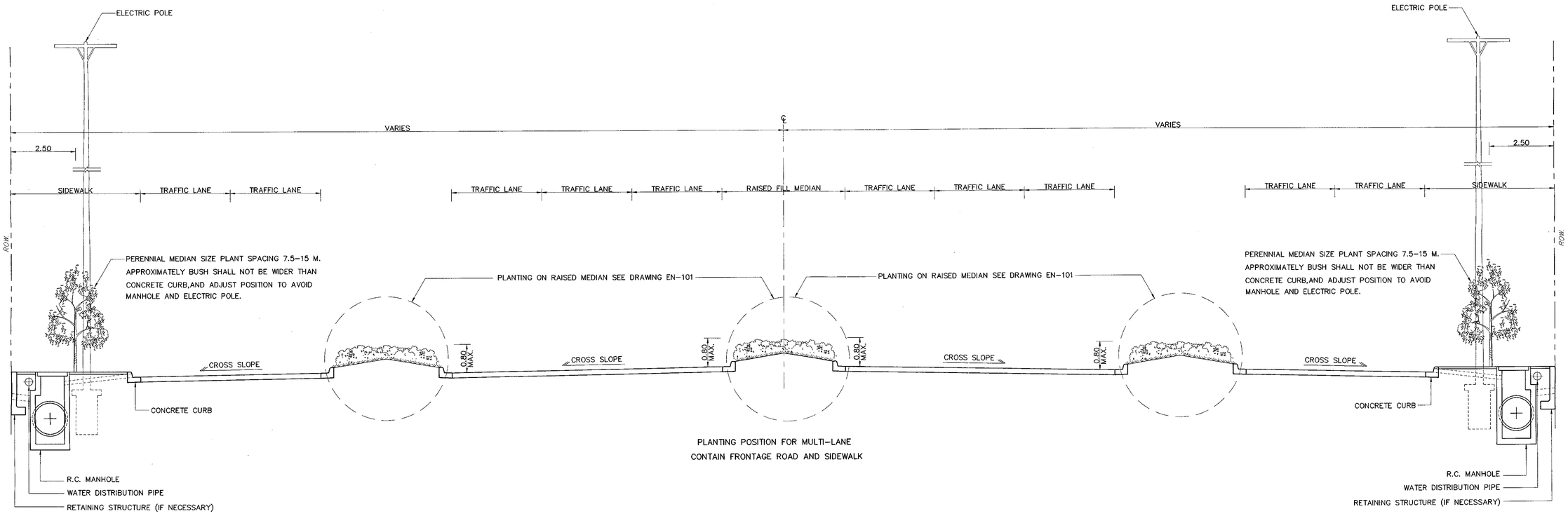

PLANTING POSITION FOR MULTI-LANE
CONTAIN FRONTAGE ROAD AND SIDEWALK

NOTE.

1. TYPE OF TREE TO BE APPLY SHALL CONSIDER GEOGRAPHIC CONDITION.
2. TYPE OF PLANT CHOSEN TO BE APPLY SHALL CONSIDER FOLLOWING DOCUMENT DETAIL DESIGN HIGHWAYS LANDSCAPE ADJUSTED FROM LANDSCAPE HIGHWAYS BUREAU DEPARTMENT OF HIGHWAYS.
3. PERENNIAL OR SHRUB THAT ARE PLANTED SHALL BE THE SAME TYPE FOR THE SIMILARITY GROWTH AND EASILY TAKE CARING ON.
4. PLANTING PERENNIAL WITH SHRUB OR SHRUB WITH SHRUB SHALL KEEP SPACING BETWEEN EACH OTHER FOR MAINTENANCE.
5. DO NOT APPLY FOR TREE THAT HAVE BRITTLE BRANCH ON NARROW MEPLAN.
6. DIMENSION ARE IN METERS UNLESS OTHERWISE INDICATED.

REF.	REVISION	SIGNATURE	DATE

KINGDOM OF THAILAND

MINISTRY OF TRANSPORT
DEPARTMENT OF HIGHWAYS

STANDARD DRAWING

PLANTING TREE
PLANTING TREE IN MEDIAN, SEPARATER AND SIDEWALK

DESIGNED : D.O.H. & CONSULTANTS	**CHECKED :** BUREAU OF LOCATION & DESIGN	**DATE :** OCT 2015
SUBMITTED : (DIRECTOR OF LOCATION & DESIGN BUREAU)		**SCALE :** AS SHOWN
APPROVED : (FOR DIRECTOR GENERAL)		**DWG NO.** EN-102
		SHEET NO. 157

D:\std dwg 2015\EN-102(REV00)

1. DRAWING SUGGESTED PLANTING ON RAISED MEDIAN ON APPROACH JUNCTION BEFORE CROSSING SIGHTLINE AND FLAT U–TURN.

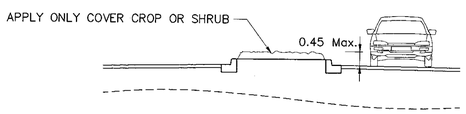

FIGURE 1.1 RAISED MEDIAN CASE

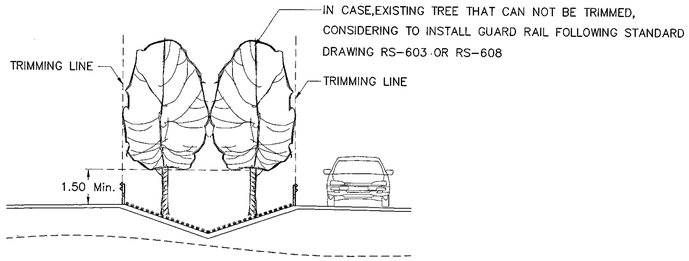

FIGURE 1.2 DEPRESSED MEDIAN CASE

2. DRAWING SUGGESTED TREE PLANTING AT MEDIAN IN REGULAR ROAD.

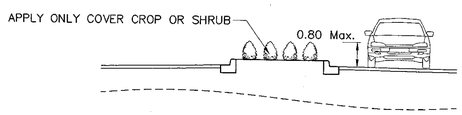

FIGURE 2.1 RAISE MEDIAN CASE

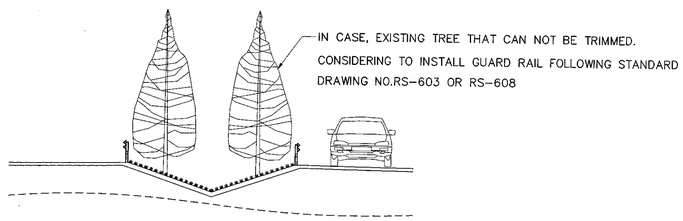

FIGURE 2.2 DEPRESSED MEDIAN CASE

3. DRAWING SUGGESTED PLANTING AT SIDEWAY OF HORIZONTAL CURVED AREA

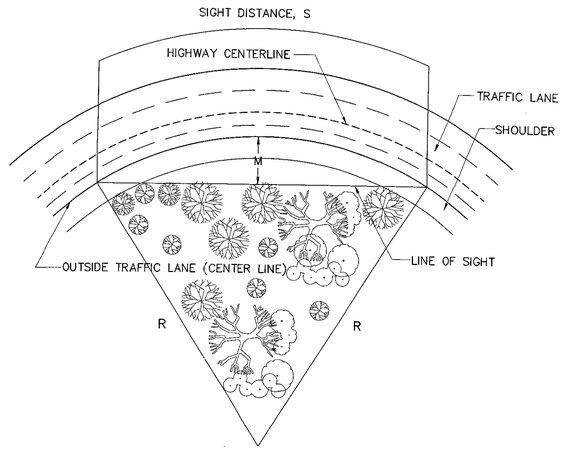

FIGURE 3.1 TRIMMING BOUNDARY FORMAT AND REMOVING TREE FOR SIGHT DISTANCE AT HORIZONTAL CURVED AREA.

NOTE.

1. HEIGHT OF TREE ON MEDIAN AT APPROACH JUNCTION BEFORE CROSSING SIGHT LINE AREA AND FLAT U–TURN.
   - 1.1 SUGGESTED HEIGHT IS A DISTANT CONTROL FOR INCREASING SIGHT EFFICIENCY ON RELEVANT AREA.
   - 1.2 MEDIAN SHALL NOT BE APPLIED FOR PERENNIAL PLANT. IN CASE, IT CONTAINS EXISTING PERENNIAL THAT CAN NOT BE REMOVED, CONSIDERING TO INSTALL GUARD RAIL FOLLOWING STANDARD DRAWING.
   - 1.3 IN CASE, SHRUB APPLY ON MEDIAN AREA, TRIMMING OR CUTTING BRANCH AND LEAF FOR HEIGHT CONTROL AS SHOWN OF FIGURE 1.1 (0.45 M.)
   - 1.4 IN CASE, MEDIAN CONTAINS EXISTING PERENNIAL PLANT, TRIMMING AND CUTTING FROM BOLE OF A TREE SHALL BE APPLIED FOLLOWING FIGURE 1.2 (1.50 M.)
   - 1.5 PLANTING AT JUNCTION SEE SUGGESTED DRAWING NO. EN–105 AND EN–106.
2. HEIGHT OF TREE AT MEDIAN ON REGULAR ROAD.
   - 2.1 SUGGESTED HEIGHT IS A DISTANT CONTROL FOR DECREASING TROUBLE FROM HEADLIGHT AT NIGHT.
   - 2.2 MEDIAN SHALL NOT BE APPLIED FOR PERENNIAL PLANT. IN CASE, IT CONTAINS EXISTING PERENNIAL THAT CAN NOT BE REMOVED, CONSIDERING TO INSTALL GUARD RAIL FOLLOWING STANDARD DRAWING.
   - 2.3 IN CASE, SHRUB APPLY ON MEDIAN AREA. THE SHRUB SHALL NOT BE HIGHER THAN 0.80 M. AS SHOWN IN FIGURE 2.1.
3. SIGHT DISTANCE ON HORIZONTAL CURVED AREA.
   - 3.1 ON HORIZONTAL CURVE AREA SHALL APPLY TREE OUTSIDE LINE OF SIGHT AS FIGURE 3.1.
   - 3.2 "M" DISTANCE MEANS DISTANCE THAT IS PERPENDICULAR FROM MIDDLE OF OUTER TRAFFIC LANE AT MIDDLE OF CURVE TO LINE OF SIGHT.
   - 3.3 "M" DISTANCE CONSIDERING FROM VELOCITY (V) AND RADIUS OF CURVATURE (R) FOLLOWING CALCULATION CONTROL DISTANCE FOR SIGHT DISTANCE AT HORIZONTAL CURVE AS SHOWN IN STANDARD DRAWING MANUAL.
   - 3.4 IN CASE OF PLANTING IN LINE OF SIGHT BOUNDARY, TREE SHALL NOT BE HIGHER THAN 0.80 M.
4. DIMENSIONS ARE IN METERS UNLESS OTHERWISE INDICATED.

REF.	REVISION	SIGNATURE	DATE

KINGDOM OF THAILAND

MINISTRY OF TRANSPORT

DEPARTMENT OF HIGHWAYS

STANDARD DRAWING

PLANTING TREE

DISTANCE AND HEIGHT OF THE TREE FOR SIGHT DISTANCE

DESIGNED : D.O.H. & CONSULTANTS	**CHECKED :** BUREAU OF LOCATION & DESIGN	**DATE :** OCT 2015
SUBMITTED : (DIRECTOR OF LOCATION & DESIGN BUREAU)		**SCALE :** AS SHOWN
		DWG NO. EN–103
APPROVED : (FOR DIRECTOR GENERAL)		**SHEET NO.** 158

D:\std dwg 2015\EN-103(REV00)

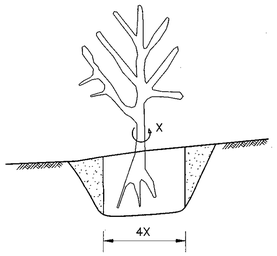

1. TRIMMING

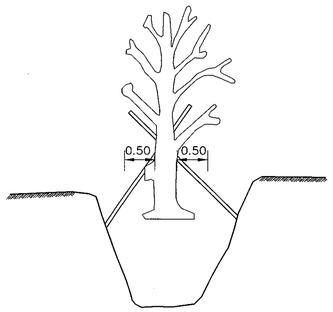

2. DIGGING UP

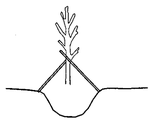

3. TAPROOT CUTTING

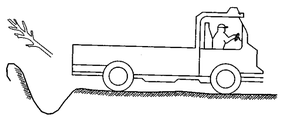

4. CRANE – TRUCK OR TRIPOD USING

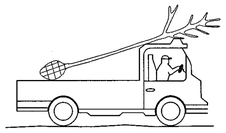

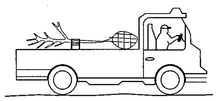

5. REMOVING

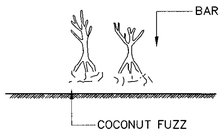

6. GREEN HOUSE

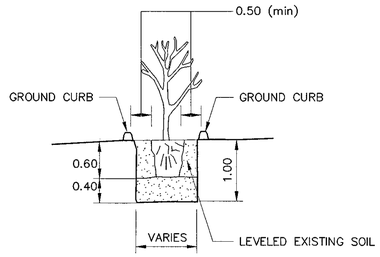

7. PLANTING

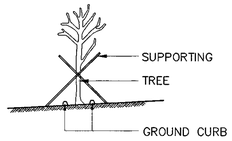

8. SUPPORTING

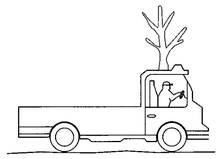

9. WATERING

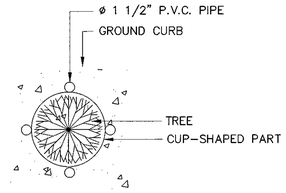

10. P.V.C. PIPE INSTALLATION

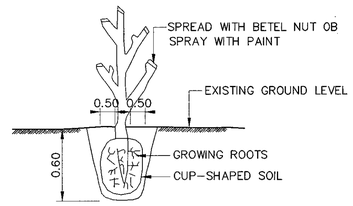

CUP – SHAPED SOIL DETAILS

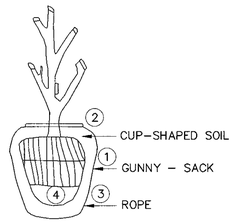

(1) THE FIRST TIED ROPE
(2) THE SECOND TIED ROPE
(3) THE THIRD TIED ROPE
(4) WRAP THE TREE BY THE KNITTED ROPE (SIMILAR TO WRAP THE WATERMELON)

DETAIL OF WRAPPING THE CUP – SHAPED SOIL WITH GUNNY – SACK

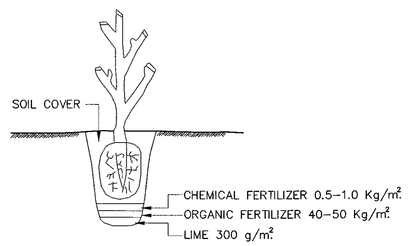

DETAIL OF PLANTING SOIL LAYERS

METHOD OF TRANSPLANTING TREE

1. TRIMMING UNNECESSARY BRANCHES TO REDUCE VAPORIZATION OF THE TREE

1.1 CUT MINOR BRANCHES AND LEAVE THEM ABOUT 2"
1.2 SPRAY THE CUTS WITH PAINT OF SPREAD WITH BETEL NUT TO PREVENT FUNGAL INFECTION

2. DIGGING AROUND THE TREE TO REMOVE

2.1 TOOLS USED ARE A HOE, A SPADE AND A CROWBAR
2.2 BIGGER OR MORE COMPLICATED GARDENING EQUIPMENT MAY BE USED FOR BIGGER TREES
2.3 DIG AROUND THE TREE – 50 CM. AWAY FROM IT AND 60 CM. DEEP USE THE CROWBAR TO CUT OFF ONCE THE MINOR ROOT
2.4 ADJUST THE SOIL AND MAKE THE SHAPE OF A CUP (DO NOT CUT THE TAPROOT)
2.5 WRAP AROUND THE TRUNK WHICH IS BEING COVERED WITH CUP–SHAPED SOIL, WITH THE GUNNY – SACKS SEW THEM TOGETHER IF TWO OR THREE GUNNY – SACKS ARE USED. TIE UP THE GUNNY – SACKS TIGHTLY WITH 30–50 ROPES USED TRIPOD TO HOLD UP THE TRUNK AT LEAST 21 DAY. (SOME KINDS OF TREE DO NOT) WATERING THE GUNNY – SACKS, NOT LET TO DRY.
2.6 AFTER 21 DAYS EXAMINE THE TREE, IF IN SUITABLE STATE, DIG INTO THE GROUND FOR ANOTHER 10–20 CM. CUT THE TAPROOT WITH A CROWBAR. WHILE IN THIS STEP, DO IT QUICKLY TO PROJECT THE REST OF THE TREE.

3. REMOVING

3.1 WRAP AROUND THE TRUCK WITH GUNNY – SACKS.
3.2 LIFT THE TREE FROM THE GROUND BY CRANE – TRUCK OR TRIPOD AND HELP WITH MAN.
3.3 LAY THE TREE DOWN ON THE BACK OF TRUCK. UNDER THE TREE ARE PIECES OF GUNNY – SACKS PUT TO PROJECT THE TREE IF THE TREE IS LINGER THAN THE BACK OF TRUCK, LAY THE BRANCHES–SIDE ON THE TRUCK' S ROOF AND THE CUP–SHAPED SIDE IN THE TRUCK.

4. PRE – TRANSPLANTING

4.1 BEFORE TRANSPLANTING , THE TREE SHOULD BE PUT TO REST IN THE GREENHOUSE ABOUT 1 MONTH FOR SOFTWOOD OR 3 MONTHS FOR HARDWOOD. COVER THE CUP – SHAPED PART WITH COCONUT FUZZ AND TILL THE LEAVES GROW.
4.2 THE TREE MAY BE PUT ANYWHERE OTHER THAN IN THE GREENHOUSE AS LONG AS THERE IS NO STRONG SUNLIGHT

5. PLANTING

5.1 PREPARE A HOLE OF SIZE 1.00x1.00x1.00 M.
5.2 FILL THE HOLE WITH THE EXISTING SOIL WHICH IS USED AS BASE 40 CM. THICK. PUT THE TREE ON THE BASE SURFACE AND THE CUP–SHAPED PART IS AT THE SAME LEVEL AS THE EXISTING GROUND AT TOP OF THE HOLE
5.3 BEFORE FILLING THE HOLE, USE DILUTE LYSOL SOLUTION TO PREVENT FUNGAL INFECTION BY POURING THE DILUTED LYSOL SOLUTION ON THE CUP–SHAPED PART OFTHE TREE THEN FILL THE HOLE WITH THE EXISTING SOIL AND COMPACTED LOOSELY UNTIL THE SOIL IS AT THE SAME LEVEL AS THE CUP–SHAPED PART
5.4 BUILD GROUND CURB AROUND THE TREE. THIS MAKES A CIRCLE WITH A RADIUS OF 1 METER. THE CURB WILL HELP PRESERVE WATER.
5.5 USE TRIPOD TO SUPPORT THE TREE.

6. MAINTENANCE

6.1 WATERING SHOULD BE DONE IN THE MORNING AND EVENING.
6.2 WATER SPRAYING (BY SPRINGER) SHOULD BE DONE FROM THE TOP TO THE BOTTOM OF THE TREE (VERTICALLY).
6.3 IT USUALLY TAKES ONE MONTH FOR YOUNG LEAVES TO COME OUT DEPENDING UPON THE KINDS OF TREES. IN THE MEAN TIME, THE TREE WILL ALSO NEED VITAMIN B–1 AT THE MORNING AND EVENING TWICE A WEEK
6.4 AFTER ONE MONTH, FERTILIZER (15 – 30 – 15)' SHALL BE GIVEN.
6.5 IF IT IS DIFFICULT TO WATER THE TREE SINCE IT IS GROWN ON HARD SOIL SUCH AS LATERITE SOIL, THE P.V.V. PIPE ø2 1/2" WHICH IS 30 CM. LONG WITH DRILLED AT BOTTOM PART ø 5 MM. WITH 10 CM. APART SHALL BE BURIES WATER WILL BE SENT THROUGH THE P.V.C. PIPE TO THE ROOTS
6.6 THE TREE WILL GROW IN ABOUT 3 MONTHS AND WILL COMPLETELY GROW IN ONE YEAR.

NOTES ;

1. ALL DIMENSIONS ARE IN METERS UNLESS OTHERWISE INDICATED.
2. TREE TO BE TRANSPLANTED FROM THE AREA OF CONSTRUCTION ARE TREES THAT ARE IMPORTANT TO BE RESERVED AS DIRECTED BY THE ENGINEER.
3. THE ENGINEER WILL ASSIGN A NEW LOCATION TO PLANT OUT OF ROADBED
4. WHEN THE TRANSPLANTING ARE FINISHED, THE CONTRACTOR SHALL TAKE CARE OF THE TREES UNTIL THEY ARE BIG ENOUGH.
5. THE DEPARTMENT OF HIGHWAYS SHALL PAY ACCORDING TO THE SIGNS OF THE GROWTH OF THE TREE. IF THE TREES DIE, THE DEPARTMENT OF HIGHWAYS SHALL PAY ACCORDING TO ROADWAY EXCAVATION EXCAVATION (EARTH). THE NUMBERS OF THE HOLES SHALL BE TAKEN INTO ACCOUNT.

REF.	REVISION	SIGNATURE	DATE

KINGDOM OF THAILAND
MINISTRY OF TRANSPORT
DEPARTMENT OF HIGHWAYS

STANDARD DRAWING
PLANTING TREE
METHOD OF TRANSPLANTING TREE

DESIGNED : D.O.H. & CONSULTANTS	CHECKED : BUREAU OF LOCATION & DESIGN	DATE : OCT 2015
SUBMITTED : (DIRECTOR OF LOCATION & DESIGN BUREAU)		SCALE : AS SHOWN
APPROVED : (FOR DIRECTOR GENERAL)		DWG NO. EN–104
		SHEET NO. 159

D:\std dwg 2015\EN-104(REV00)

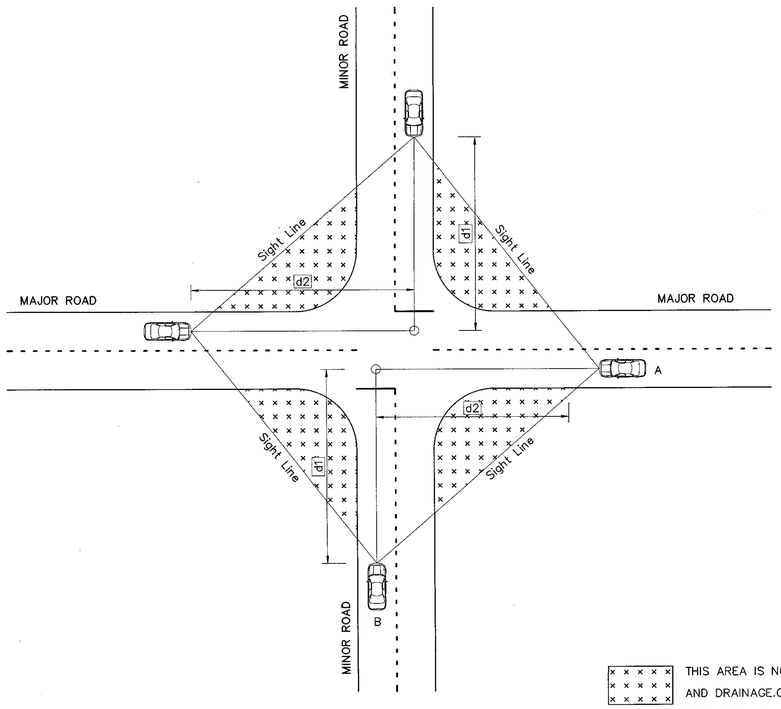

FIGURE 1. DRAWING SUGGESTED AT INTERSECTION AREA (CASE NO.1)

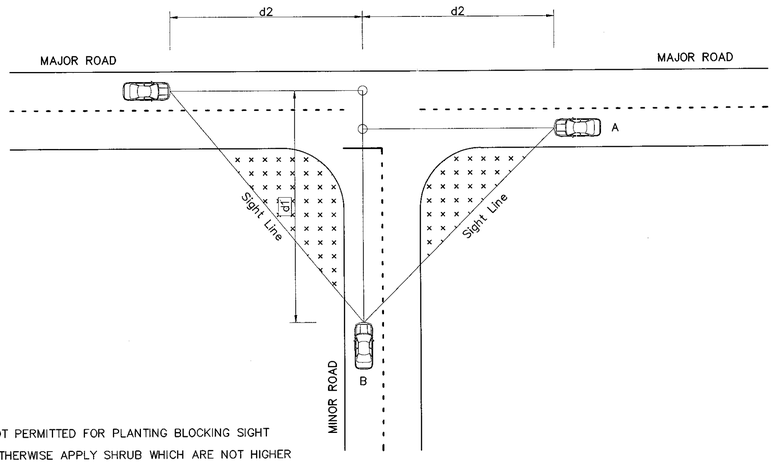

FIGURE 2. DRAWING SUGGESTED PLANTING AT T-JUNCTION (CASE NO.1)

THIS AREA IS NOT PERMITTED FOR PLANTING BLOCKING SIGHT AND DRAINAGE.OTHERWISE APPLY SHRUB WHICH ARE NOT HIGHER THEN 0.80 M FROM TRAFFIC SURFACE

NOTE.

1. PLANTING AT INTERSECTION SHALL BE CONSIDER POSITION AND SPACING OF TREE FOLLOWING SUGGESTED PLANTING REGULATION DRAWING NO.EN-101,EN-103 AND SHALL NOT BE BLOCKING (SIGHT LINE) BY
   - FIRST CASE INTERSECTION ON HIGHWAYS THAT CONTAIN A FEW TRAFFIC VOLUME OR INTERSECTION THAT DO NOT HAVE TRAFFIC LIGHT CONTROL ,SHALL BE CONSIDER SAFETY DISTANCE FOLLOWING TABLE 1.
   - SECOND CASE INTERSECTION THAT CONTROL MINOR ROAD TO BE STOPPED OR INTERSECTIONS THAT ARE CONTROL BY TRAFFIC LIGHT, CONSIDER SAFETY SIGHT DISTANCE FOLLOWING TABLE 1.
2. PLANTING AT MEDIAN ,SEPARATOR SHALL APPLY COVER CROP OR FAMILY GRAMINEAE AND CONSIDER REGULATION FOLLOWING PLANTING SUGGESTED DRAWING PAGE NO. EN-103.
3. PLANTING AT INTERSECTION AREA SHALL CONSIDER DRAINAGE SYSTEM FOLLOWING DEPARTMENT OF HIGHWAYS REGULATIONS.
4. TYPE OF TREE SHALL CONSIDER GEOGRAPHIC CONDITION.
5. TYPE OF PLANT CHOSEN SHALL CONSIDER LOCAL TYPE WHICH ARE FAIR IN TERM OF PRICES, PROPER CONDITION AND MAINTENANCE.
6. PERENNIAL OR SHRUB APPLIED SHALL BE THE SAME TYPE FOR THE SIMILAR GROWTH AND MAINTENANCE.
7. PLANTING PERENNIAL WITH SHRUB OR SHRUB WITH SHRUB SHALL KEEP SPACING BETWEEN EACH OTHER FOR MAINTENANCE.
8. DO NOT APPLY FOR TREE THAT HAVE BRITTLE BRANCH ON NARROW MEDIAN.
9. TYPE OF TREE CHOSEN THAT APPLIED ON INTERSECTION AREA SHALL CONSIDER REGULATION FOLLOWING HIGHWAYS LANDSCAPE ADJUSTED DETAIL DESIGN DOCUMENT FROM HIGHWAYS LANDSCAPE BUREAU DEPARTMENT OF HIGHWAYS .

TABLE1. SAFETY SIGHT DISTANCE MINOR ROAD (d1) AND MAJOR ROAD (d2)

SPEED (KM/H)	SAFETY SIGHT DISTANCE			
	2 LANE	4 LANE		6 LANE
		WITH MEDIAN	WITHOUT MEDIAN	
40	95	110	115	120
50	120	135	140	150
60	145	160	170	180
70	165	185	195	210
80	190	215	225	240
90	215	240	250	270
100	235	270	280	300

10. IN CASE HORIZONTAL INTERSECTION THAT ARE MANAGED BY USING TRAFFIC LIGHT,SIGHT DISTANCE SHALL CONSIDER AS FOLLOW NECESSITY; HOWEVER,IT SHALL BE FOLLOWED DESIGN SAFETY PRINCIPLES.

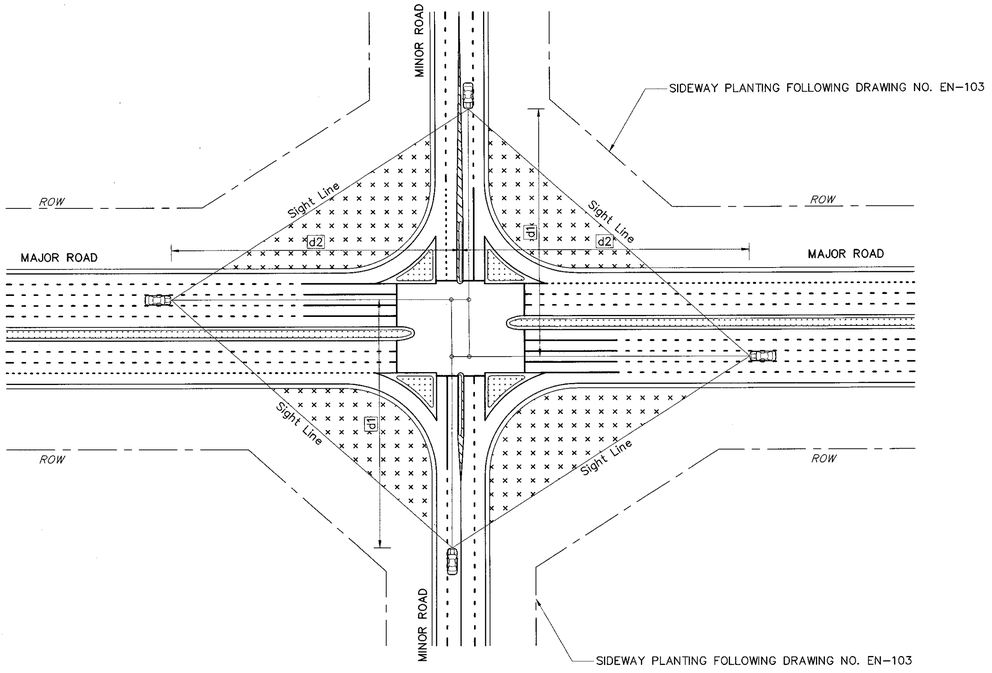

FIGURE 3. DRAWING SUGGESTED PLANTING AT INTERSECTION AREA (CASE NO.2)

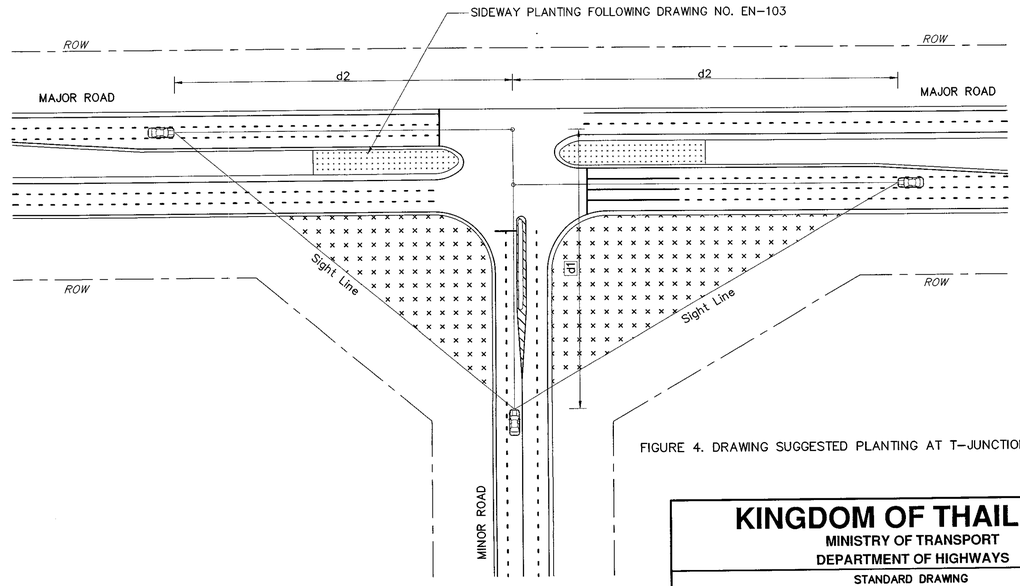

FIGURE 4. DRAWING SUGGESTED PLANTING AT T-JUNCTION (CASE NO.2)

KINGDOM OF THAILAND

MINISTRY OF TRANSPORT
DEPARTMENT OF HIGHWAYS

STANDARD DRAWING

PLANTING TREE
PLANTING TREE IN INTERSECTION

DESIGNED : D.O.H. & CONSULTANTS	CHECKED : BUREAU OF LOCATION & DESIGN	DATE : OCT 2015
SUBMITTED : (DIRECTOR OF LOCATION & DESIGN BUREAU)		SCALE : AS SHOWN
APPROVED : (FOR DIRECTOR GENERAL)		DWG NO. EN-105
		SHEET NO. 160

REF.	REVISION	SIGNATURE	DATE

D:\std dwg 2015\EN-105(REV00)

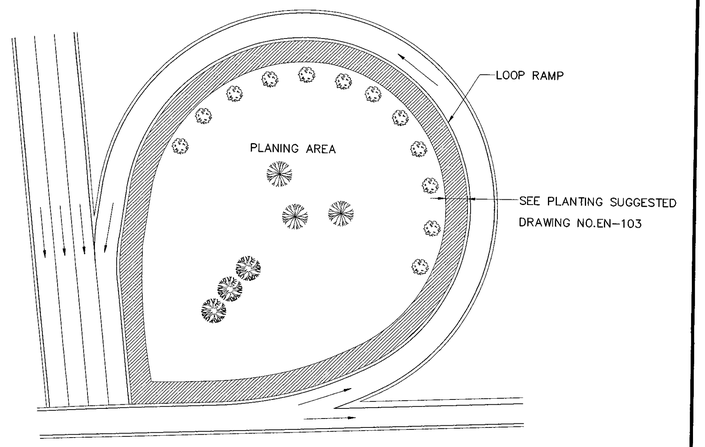

FIGURE NO.2 PLANTING SUGGESTED DRAWING ON INTERCHANGE OF LOOP RAMP AREA.

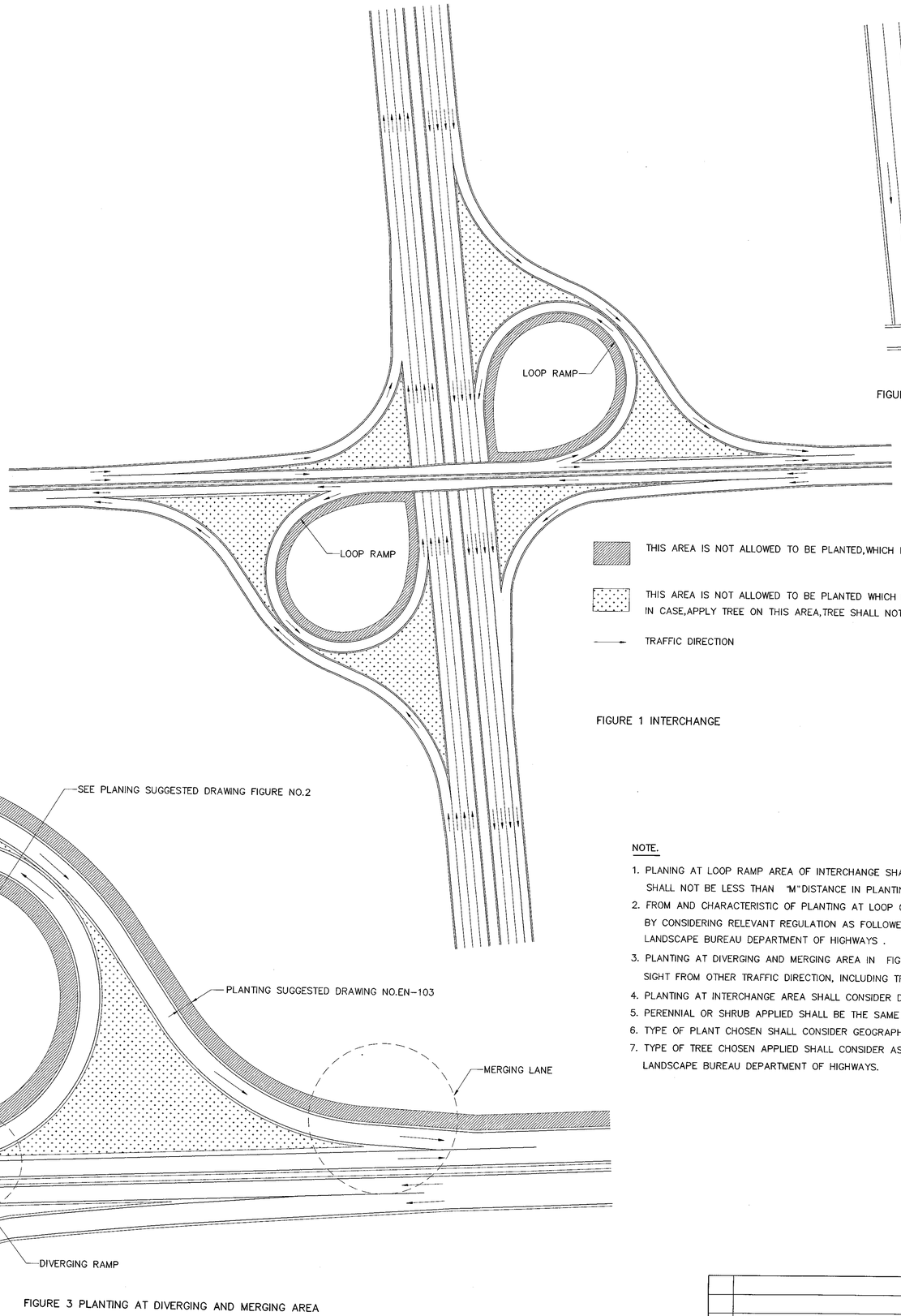

FIGURE 3 PLANTING AT DIVERGING AND MERGING AREA

THIS AREA IS NOT ALLOWED TO BE PLANTED,WHICH IS BLOCKING SIGHT LINE AND TRAFFIC LANE

THIS AREA IS NOT ALLOWED TO BE PLANTED WHICH IS BLOCKING SHOULDER OF ROADWAY SIGHT AND DRAINAGE.
IN CASE,APPLY TREE ON THIS AREA,TREE SHALL NOT BE HIGHER THAN 0.80 M. FROM TRAFFIC SURFACE.

TRAFFIC DIRECTION

FIGURE 1 INTERCHANGE

NOTE.

1. PLANING AT LOOP RAMP AREA OF INTERCHANGE SHALL BE PROVIDED SIGHT LINE SPACING AS SHOWN FIGURE NO.2 "M" DISTANCE SHALL NOT BE LESS THAN "M" DISTANCE IN PLANTING SUGGESTED DRAWING ON PAGE NO.EN–103 (FIGURE 3.1).
2. FROM AND CHARACTERISTIC OF PLANTING AT LOOP OF INTERCHANGE AREA AS SHOWN IN FIGURE NO.2 SHALL BE PROPERLY ADJUSTED BY CONSIDERING RELEVANT REGULATION AS FOLLOWED HIGHWAYS LANDSCAPE ADJUSTED DETAIL DESIGN DOCUMENT FROM HIGHWAYS LANDSCAPE BUREAU DEPARTMENT OF HIGHWAYS .
3. PLANTING AT DIVERGING AND MERGING AREA IN FIGURE NO.3 SHALL CONSIDER HEIGHT OF TREE. TO ENSURE THAT THE TREE IS NOT BLOCKING DRIVER SIGHT FROM OTHER TRAFFIC DIRECTION, INCLUDING TRAFFIC SIGNS.
4. PLANTING AT INTERCHANGE AREA SHALL CONSIDER DRAINAGE SYSTEM AS FOLLOWED DEPARTMENT OF HIGHWAYS REGULATION.
5. PERENNIAL OR SHRUB APPLIED SHALL BE THE SAME TYPE FOR THE SIMILAR GROWTH AND MAINTENANCE.
6. TYPE OF PLANT CHOSEN SHALL CONSIDER GEOGRAPHIC CONDITION.
7. TYPE OF TREE CHOSEN APPLIED SHALL CONSIDER AS FOLLOWED HIGHWAYS LANDSCAPE ADJUSTED DETAIL DESIGN DOCUMENT FROM HIGHWAYS LANDSCAPE BUREAU DEPARTMENT OF HIGHWAYS.

REF.	REVISION	SIGNATURE	DATE

KINGDOM OF THAILAND

MINISTRY OF TRANSPORT
DEPARTMENT OF HIGHWAYS

STANDARD DRAWING

PLANTING TREE
PLANTING TREE IN INTERCHANGE

DESIGNED : D.O.H. & CONSULTANTS	**CHECKED :** BUREAU OF LOCATION & DESIGN	**DATE :** OCT 2015
SUBMITTED : (DIRECTOR OF LOCATION & DESIGN BUREAU)		**SCALE :** AS SHOWN
APPROVED : (FOR DIRECTOR GENERAL)		**DWG NO.** EN–106
		SHEET NO. 161

D:\std dwg 2015\EN-106(REV00)

SPECIFICATION FOR NOISE BARRIER CONSTRUCTION

1. INTRODUCTION

THIS GENERAL SPECIFICATION AND REQUIREMENTS DESCRIBE THE MATERIALS AND INSTALLATION OF THE NOISE BARRIER SYSTEM AND RELATED WORK FOR THE PROJECT. WHICH HAD UNDERGONE NOISE REDUCTION TARGET CALCULATION AND APPROPRIATE NOISE BARRIER DESIGN TO MEET NOISE REDUCTION TARGET. REFER TO STANDARD DRAWING MANUAL FOR NOISE REDUCTION CALCULATION. THE WORKS SHALL BE EXECUTED TO COMPLETION AND IN CONFORMITY WITH THE DRAWINGS AND THESE SPECIFICATIONS.

1.1 SCOPE OF WORK

THE SCOPE OF WORK THE CONSTRUCTOR SHALL INCLUDE PROVISION, INSTALLATION, TESTING, COMMISSIONING OF EQUIPMENT AND ACCESSORIES AS SHOWN ON THE DRAWINGS AND SPECIFICATIONS TO ACHIEVE A COMPLETE NOISE BARRIER SYSTEM.

1.2 STANDARD, CODES AND REGULATIONS

THE ENTIRE SYSTEM AND ITS BASIC COMPONENTS SHALL CONFORM IN ALL RESPECTS TO THE STANDARDS AND REGULATIONS OF DEPARTMENT OF HIGHWAYS. THE FOLLOWING STANDARDS ARE MENTIONED IN THIS SPECIFICATION FOR SYSTEMS AND/OR COMPONENT AND,WHERE DESCRIBED, SHALL CONFORM TO SUCH STANDARDS.

TISI – THAI INDUSTRIAL STANDARD INSTITUTE
JIS – JAPAN INDUSTRIAL STANDARD
BS – BRITISH STANDARD
DIN – DEUTSCHE INDUSTRIE NORMEN (German Industrial Standard)
ASTM – AMERICAN SOCIETY OF TESTING MATERIALS

1.3 TEST AND CONTROL

THE CONSTRUCTOR SHALL PROVIDE MATERIAL TEST CERTIFICATE, INCLUDING GENERAL TEST BY CERTIFIED DOMESTIC INSTITUTE LABORATORY TESTER.

2. SOUND SPECIFICATION

2.1 THE NOISE BARRIER SHALL CONFORM TO THESE REFERENCE STANDARDS :

- BS EN 1793
- ASTM E90 OR ASTM E795
- JIS A 1416 OR JIS A 1409
- ISO 140 OR ISO 354

THE PROPERTIES OF NOISE BARRIER SHALL BE AS GIVEN BELOW OR EQUIVALENT.,

TYPE	BS EN 1793	JIS A 1416/ASTM E90/ISO 140	JIS A 1409/ASTM E423/ISO 354
FIBERGLASS REINFORCED PLASTIC (FRP.)	VALUE OF WEIGHTED SOUND REDUCTION INDEX (Rw) MORE THAN 30 VALUE OF NOISE REDUCTION COEFFICIENT (NRC) MORE THAN 0.60	VALUE OF SOUND TRANSMISSION LOSS MORE THAN 30 db AND AT ANY FREQUENCY MORE THAN AS FOLLOWING : – 25 dB AT 400 Hz – 30 dB AT 1,000 Hz – 35 dB AT 2,000 Hz – 40 dB AT 4,000 Hz	VALUE OF NOISE REDUCTION COEFFICIENT (NRC) MORE THAN 0.60 AND AT ANY FREQUENCY MORE THAN AS FOLLOWING : – 0.7 dB AT 400 Hz – 0.8 dB AT 1,000 Hz – 0.6 dB AT 2,000 Hz – 0.5 dB AT 4,000 Hz
GLASS FIBER REINFORCED CEMENT (GRC.)	VALUE OF WEIGHTED SOUND REDUCTION INDEX (Rw) MORE THAN 30 VALUE OF NOISE REDUCTION COEFFICIENT (NRC) MORE THAN 0.60	VALUE OF SOUND TRANSMISSION LOSS MORE THAN 30 db AND AT ANY FREQUENCY MORE THAN AS FOLLOWING : – 25 dB AT 400 Hz – 30 dB AT 1,000 Hz – 35 dB AT 2,000 Hz – 40 dB AT 4,000 Hz	VALUE OF NOISE REDUCTION COEFFICIENT (NRC) MORE THAN 0.60 AND AT ANY FREQUENCY MORE THAN AS FOLLOWING : – 0.7 dB AT 400 Hz – 0.8 dB AT 1,000 Hz – 0.6 dB AT 2,000 Hz – 0.5 dB AT 4,000 Hz
METAL PANEL	VALUE OF WEIGHTED SOUND REDUCTION INDEX (Rw) MORE THAN 30 VALUE OF NOISE REDUCTION COEFFICIENT (NRC) MORE THAN 0.60	VALUE OF SOUND TRANSMISSION LOSS MORE THAN 30 db AND AT ANY FREQUENCY MORE THAN AS FOLLOWING : – 25 dB AT 400 Hz – 30 dB AT 1,000 Hz – 35 dB AT 2,000 Hz – 40 dB AT 4,000 Hz	VALUE OF NOISE REDUCTION COEFFICIENT (NRC) MORE THAN 0.60 AND AT ANY FREQUENCY MORE THAN AS FOLLOWING : – 0.7 dB AT 400 Hz – 0.8 dB AT 1,000 Hz – 0.6 dB AT 2,000 Hz – 0.5 dB AT 4,000 Hz
ACRYLIC REINFORCED	VALUE OF WEIGHTED SOUND REDUCTION INDEX (Rw) MORE THAN 30	VALUE OF SOUND TRANSMISSION LOSS MORE THAN 30 db AND AT ANY FREQUENCY MORE THAN AS FOLLOWING : – 25 dB AT 400 Hz – 30 dB AT 1,000 Hz – 35 dB AT 2,000 Hz – 40 dB AT 4,000 Hz	

3. MATERIALS COMPONENT SPECIFICATION

THE SPECIFICATION MATERIAL,MECHANICAL AND NOISE REDUCTION PERFORMANCE REQUIREMENT ARE AS FOLLOWING

TYPE	GENERAL	SURFACE AND COVERING	ENGINEERING PROPERTIES						
			Impact Strength	Compressive Strength	Elastic Modulus	Bending Elastic Strength	Bending / Tensile Ult. Strength	Weight	Wind Load
FIBERGLASS REINFORCED PLASTIC (FRP.)	The Panel shall be made from Resin type Unsaturated polyester resin class Orthophthalic R 127 TP having properties as Weather resistance and Ultra violet resistance with JIS–K 6901 Standard or Equivalent. Fiberglass class E–glass admixture Glass content more than 28% thickness both side more than 5mm.	The Panel shall be cover with gel coat at 700 gram per square meter and admixture Ultra violet, weather protection such as Weathering additive agent SA 3–C with UV Absorber (Cyasorb UV 5411 0.25%) Surface Panel a smooth without scratch over 0.80 mm. depth.			⩾ 49,000 (kg/m²)	⩾ 1,000 (kg/m²)	⩾ 600 (kg/m²)	>15 (kg/m²)	⩾150 (kg/m²)
GLASSFIBER REINFORCED CEMENT (GRC.)	The Panel shall be made from Portland cement type I with Fiberglass class AR–glass admixture content more than 4.8% by weight, Minimum thickness 8 mm. both side Test Engineering properties as 28 Days	The Panel shall be cover with GRC. smooth outer surface, ratio of air bubble less than 3.0 mm.per 2 square feet.	100–250 (kJ/m²)	500–800 (kg/m²)	100–200 (kg/m²)	70–110 (kg/m²)	80–110 (kg/m²) (ASTM C947–99)	>35 (kg/m²)	⩾150 (kg/m²)
METAL PANEL	The Panel shall be made from Aluminum class A 5052 or JIS–H–400 or zinc steel thickness 0.60 mm. minimum equivalent, back side galvanize cover 1.6 mm thickness by standard of JIS G3302–SGH 400Z27 or equivalent	The color of the panel shall be selected from from manufacturer standard colors. Separate colors may be specified for face panel and back panel. The lowest available gloss in the specified color shall be selected	Aluminium / Fy / ⩾28,000 psi	Steel / Fy / ⩾34,000 psi	Aluminium / Fb=0.6Fy / ⩾16,800 psi	Steel / Fb=0.6Fy / ⩾ 20,000 psi	Aluminium / Fv=0.4Fy / ⩾11,200 psi	Steel / Fv=0.4Fy / ⩾13,900 psi	Aluminium / E / MORE THAN 10,200,000 psi	Steel / E / ⩾210,000 psi	⩾150 (kg/m²)
ACRYLIC REINFORCED	The panel shall be made from origin MMA/PMMA and be a rigid monolithic transparent sheet and has good weather resistant	The Acrylic sheet shall provide protection against birds inadvertently flying into the transparent panels, which often results in their death, incorporating a design into the transparent barrier that is easily recognized by birds as a barrier provides this protection.	Light Transmittance ⩾90%	Tensile Strength: Rupture ⩾700 (kg/m²)	Tensile Strength: Elastic modulus ⩾30,000 (kg/m²)	Flexural Strength: Rupture ⩾980 (kg/m²)	Flexural Strength: Elastic modulus ⩾30,000 (kg/m²)	Impact Strength ⩾12 (kg/m²)	Vicat softening point > 100 celsius	burning rate < 50 mm./min.

4. CONSTRUCTION SPECIFICATION

THE CONSTRUCTOR SHALL SUBMIT DESIGN CALCULATIONS AND CONTRACT DRAWINGS FOR PREFABRICATED NOISE BARRIER PANELS. POST AND FABRICATION DESIGN AS REQUIRED.

DESIGN:

A.) PROVIDE DRAWINGS, CALCULATIONS, ERECTION METHODS, AND DETAILED ERECTION PLANS FOR APPROVAL, SIGNED BY ENGINEER.

B.) BARRIER WALL SHALL BE RESISTANT TO WIND FORCE MORE THAN 150 KG./SQM. WHERE INSTALL ON ELEVATED STRUCTURE AND MORE THAN 120 KG./SQM. WHERE INSTALL ON GROUND.

C.) DETERMINE FINAL PLAN LOCATION,GRADES AND ELEVATION FOR GROUND MOUNTED NOISE BARRIER WALL. FURNISH PLANS AND ELEVATION TO THE CONSTRUCTOR TO DEVELOP THE FOUNDATION DRAWINGS, INCLUDING A COMPLETE ELEVATION VIEW OF EACH WALL SECTION INCLUDING TOP AND BOTTOM ELEVATIONS. PROJECT FINAL GROUND ELEVATIONS, ESTABLISHED IN THE FIELD, FOR THE DURATION OF THE PROJECT AND DO NOT ADJUST AFTER SHOP DRAWING APPROVAL.

D.) FOUNDATIONS TO BE DESIGNED AND INSTALLED BY OTHERS. CHECK ACTUAL SOIL CONDITIONS, PRESSURE AND SETTLEMENT TO INSURE FAILURE OCCURS. ADEQUATELY REINFORCE THE ENTIRE FOOTING AS REQUIRED BY THE APPROVED DESIGN. BARRIER WILL PROVIDE ALL WALL FORCES NEEDED TO DESIGN THE FOOTINGS.

E.) IN CASE NECESSARY TO BE AVOIDING OTHER STRUCTURES OBSTRUCT, ENGINEER HAS TO DESIGN NOISE BARRIER AS CLOSED PANEL.

5. GENERAL WORKMANSHIP REQUIREMENT

A.) THE NOISE BARRIER PANEL SHALL EXHIBIT GOOD WORKMANSHIP AND BE FREE OF BURRS, CRACKS, OR OTHER OBJECTIONABLE DEFECTS, WHICH WOULD ADVERSELY AFFECT THE BARRIER PERFORMANCE OR SERVICE ABILITY. PANELS ASSEMBLED TOGETHER WITH CAULKER JOINT SHALL NOT PERMIT LIGHT LEAKS THROUGH HORIZONTAL JOINTS.

B.) ALL DAMAGED PANELS WILL BE REJECTED EITHER AT THE FABRICATION SHOP ON THE CONSTRUCTION SITE EVEN AFTER INSTALLATION, BUT PRIOR TO ACCEPTANCE OF THE PROJECT.

6. MEASUREMENT AND PAYMENT

A.) THE NOISE BARRIER SHALL BE MEASURED IN SQUARE METER ALONG THE TOP OF MOUNTED, MEASURED IN PLACE,COMPLETE AND ACCEPTED.

B.) PAYMENT WILL BE FULL COMPENSATION FOR ALL WORK IN THIS SECTION, INCLUDING FURNISHING ALL MATERIALS, LABOR AND EQUIPMENT TO CONSTRUCT THE NOISE BARRIER WALL.

REF.	REVISION	SIGNATURE	DATE

KINGDOM OF THAILAND
MINISTRY OF TRANSPORT
DEPARTMENT OF HIGHWAYS

STANDARD DRAWING

NOISE BARRIER CONSTRUCTION
SPECIFICATION FOR CONSTRUCTION

DESIGNED : D.O.H. & CONSULTANTS	CHECKED : BUREAU OF LOCATION & DESIGN	DATE : OCT 2015
SUBMITTED : (DIRECTOR OF LOCATION & DESIGN BUREAU)		SCALE : AS SHOWN
APPROVED : (FOR DIRECTOR GENERAL)		DWG NO. EN–201
		SHEET NO. 162

D:\std dwg 2015\EN-201(REV02)

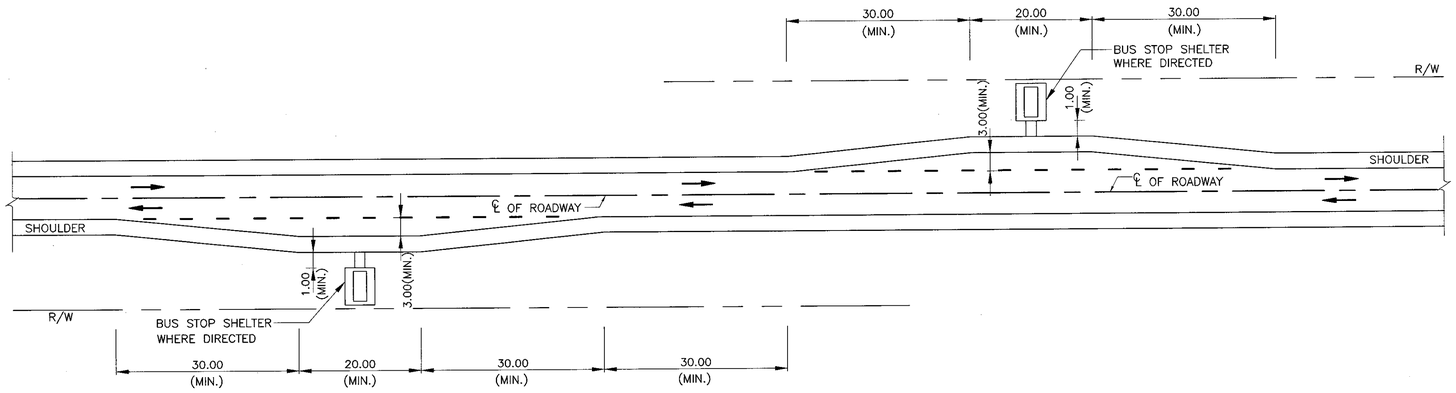

GENERAL PLAN FOR 2 LANE 2 WAY BUS STOP

NOT TO SCALE

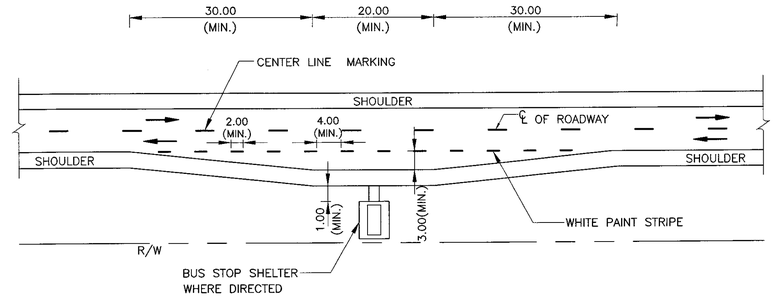

DETAILED LAYOUT

NOT TO SCALE

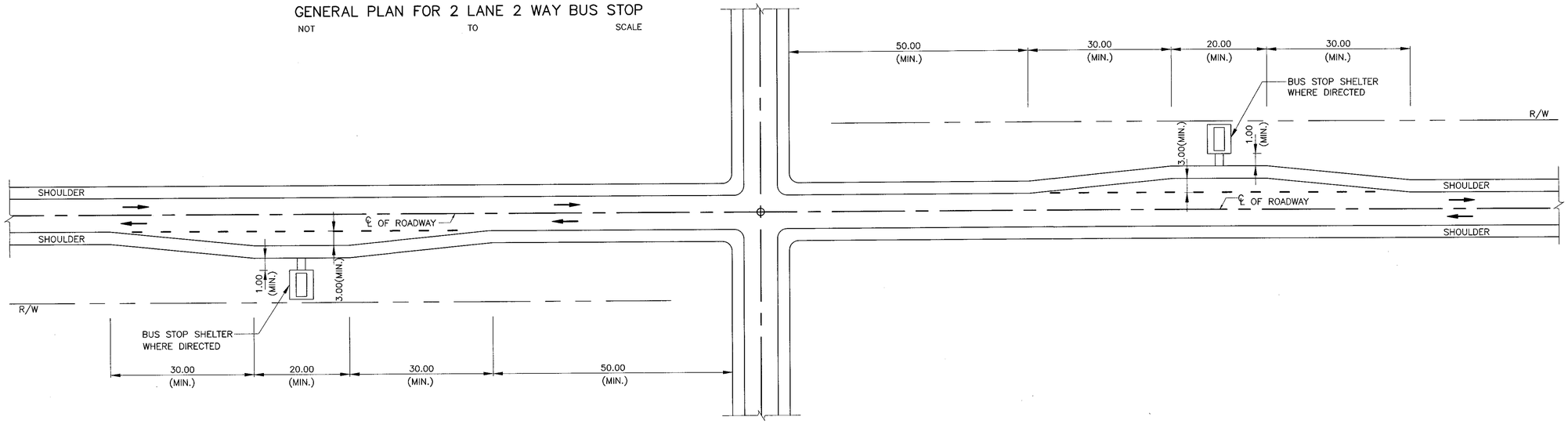

PLAN FOR BUS STOP NEAR INTERSECTION

NOT TO SCALE

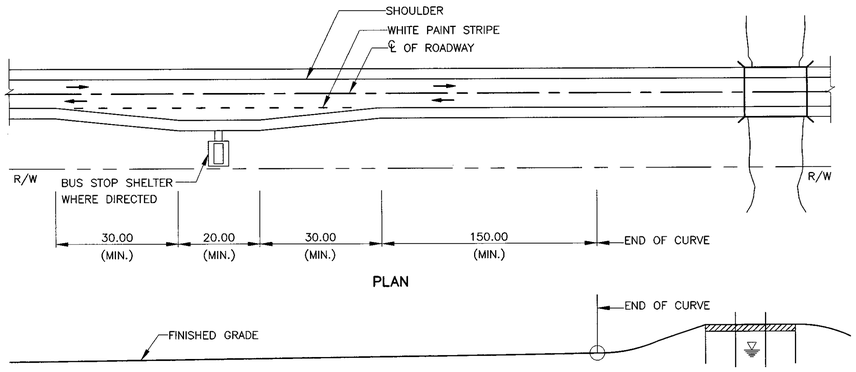

BUS STOP NEAR BRIDGE–SLOPE ON APPROACH TO BRIDGE

NOT TO SCALE

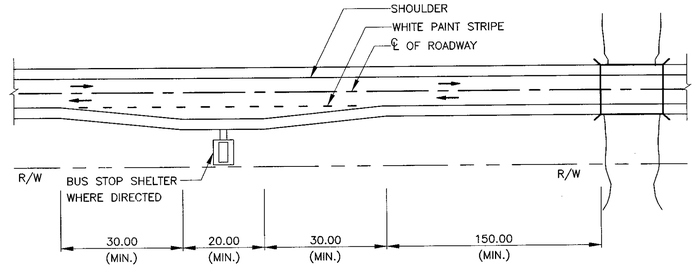

PLAN FOR BUS STOP NEAR BRIDGE–FLAT PROFILE

NOT TO SCALE

NOTES :

1. ALL DIMENSIONS ARE IN METERS UNLESS OTHERWISE INDICATED.
2. BUS STOP SHALL BE CONSTRUCTED AT LOCATIONS AS SHOWN ON THE DRAWINGS OR AS DIRECTED BY THE ENGINEER.
3. CROSS SLOPE AND PAVEMENT OF THE BUS STOP ARE THE SAME AS FOR THE MAIN ROADWAY.
4. DIMENSIONS INDICATED BY "MIN." SHALL BE DIRECTED BY THE ENGINEER DEPENDING ON NUMBER AND SIZE OF BUSES, NUMBER PASSENGERS AND DESIGN SPEED OF HIGHWAY.

REF.	REVISION	SIGNATURE	DATE

KINGDOM OF THAILAND

MINISTRY OF TRANSPORT

DEPARTMENT OF HIGHWAYS

STANDARD DRAWING

BUS STOP LAYOUT

DESIGNED : D.O.H. & CONSULTANTS	**CHECKED :** BUREAU OF LOCATION & DESIGN	**DATE :** OCT 2015
SUBMITTED : (DIRECTOR OF LOCATION & DESIGN BUREAU)		**SCALE :** AS SHOWN
		DWG NO. EN–301
APPROVED : (FOR DIRECTOR GENERAL)		**SHEET NO.** 163

D:\std dwg 2015\EN-301(REV00)

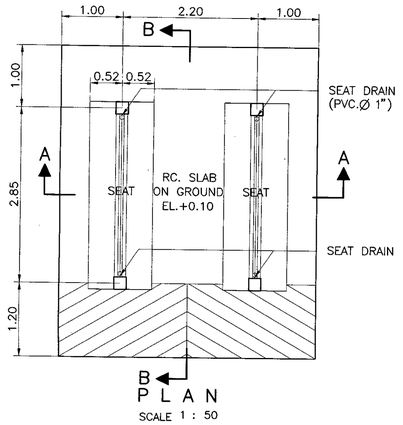

PLAN

SCALE 1 : 50

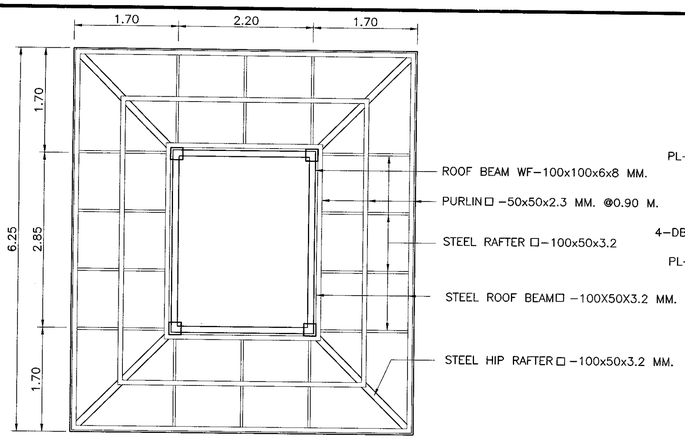

ROOF FRAMING PLAN

SCALE 1 : 50

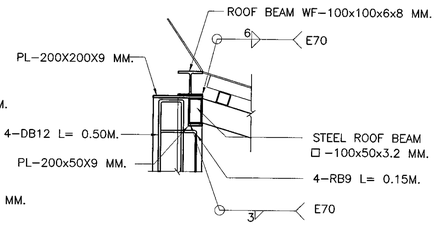

DETAIL "A"

SCALE 1 : 12.5

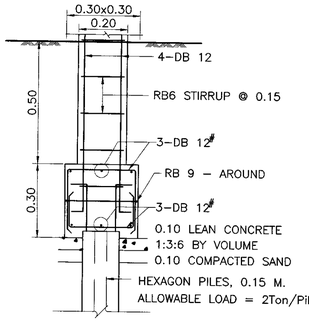

PILE FOOTING DETAILS

SCALE 1 : 12.5

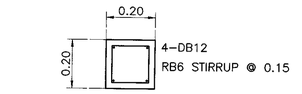

PIER AND COLUMN DETAILS

SCALE 1 : 12.5

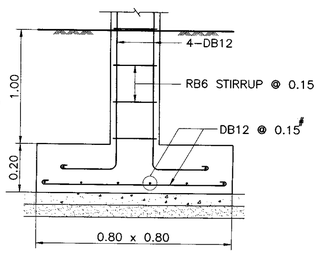

SPREAD FOOTING DETAILS

SCALE 1 : 12.5

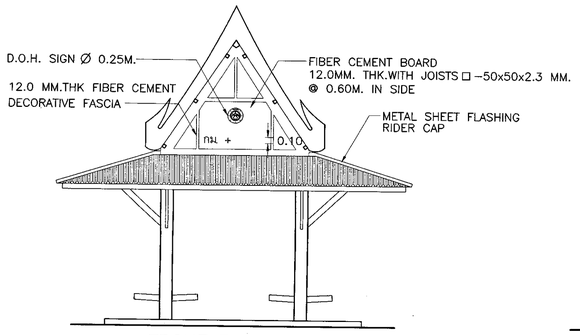

FRONT ELEVATION

SCALE 1 : 50

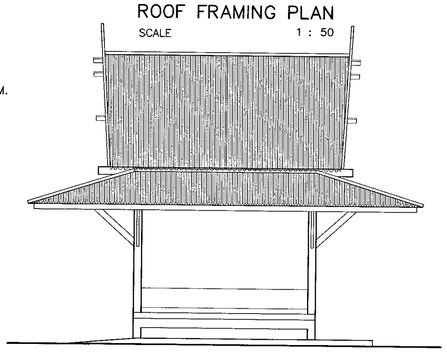

SIDE ELEVATION

SCALE 1 : 50

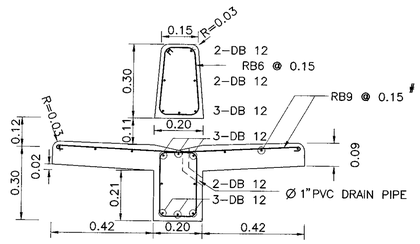

SEAT AND BACK REST DETAIL

SCALE 1 : 12.5

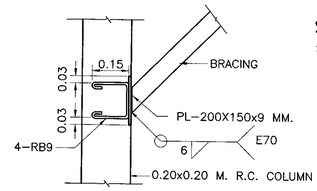

DETAIL "B"

SCALE 1 : 12.5

NOTE :

1. DIMENSIONS ARE IN METERS UNLESS OTHERWISE INDICATED.
2. CONCRETE SHALL HAVE A MINIMUM ULTIMATE COMPRESSIVE STRENGTH OF 20 MPa (204 KSC) FOR 15x15x15 CM. CUBE AT 28 DAYS,
3. CEMENT SHALL CONFORM TO TIS. 15 TYPE I PORTLAND CEMENT OR APPROVAL TYPE
4. REINFORCING STEEL SHALL CONFORM TO TIS. 20 GRADE SR 24 FOR ROUND BARS AND TIS. 24 GRADE SD 40 FOR DEFORM BARS.
5. HOT ROLLED STRUCTURAL STEEL SECTIONS SHALL CONFORM TO TIS. 1227 GRADE SM 400.
6. HOLLOW STRUCTURAL STEEL SECTIONS SHALL CONFORM TO TIS. 107 GRADE HS 41.
7. ELEVATION±0.00 AS SHOWN IN THIS DRAWING, INDICATES THE ROADWAY SHOULDER ELEVATION.
8. A PATH FROM SHOULDER EDGE TO THE SHELTER SHALL BE PROVIDED BY 1.20 M. WIDE AT REQUIRED SLOPE 1:12
9. METAL SHEET ROOFING SHALL CONFORM TO TIS. 1128 AND COLORED IN GREEN.
10. DURABLE EMULSION PAINT SHALL CONFORM TO TIS. 2321
11. CONCRETE COLUMN SHALL BE PAINTED IN DARK BROWN COLOR
12. ANTI-CORROSIVE PRIMER PAINT SHALL CONFORM TO TIS.2387
13. FIBER CEMENT BOARD SHALL CONFORM TO TIS. 1427
14. GABLE-END, FASCIA AND CEILING SHALL BE PAINTED IN WHITE COLOR.
15. THE MINIMUM WELDING THICKNESS SHALL BE 75% OF THICK MEMBER FILLET WELD OR 3 MM. THE WELDING SHALL CONFORM TO AWS AND TIS. 49
16. EDGE OF SEAT AND BACK REST SHALL BE CURVED WITHOUT SHARP AND SURFACE SHALL BE POLISHED AS WELL AS FLOOR FINISHING
17. SPREAD FOOTING SHALL BE USED FOR ALLOWABLE SOIL BEARING CAPACITY UNDER THE FOUNDATION MORE THAN 4 TON/M²

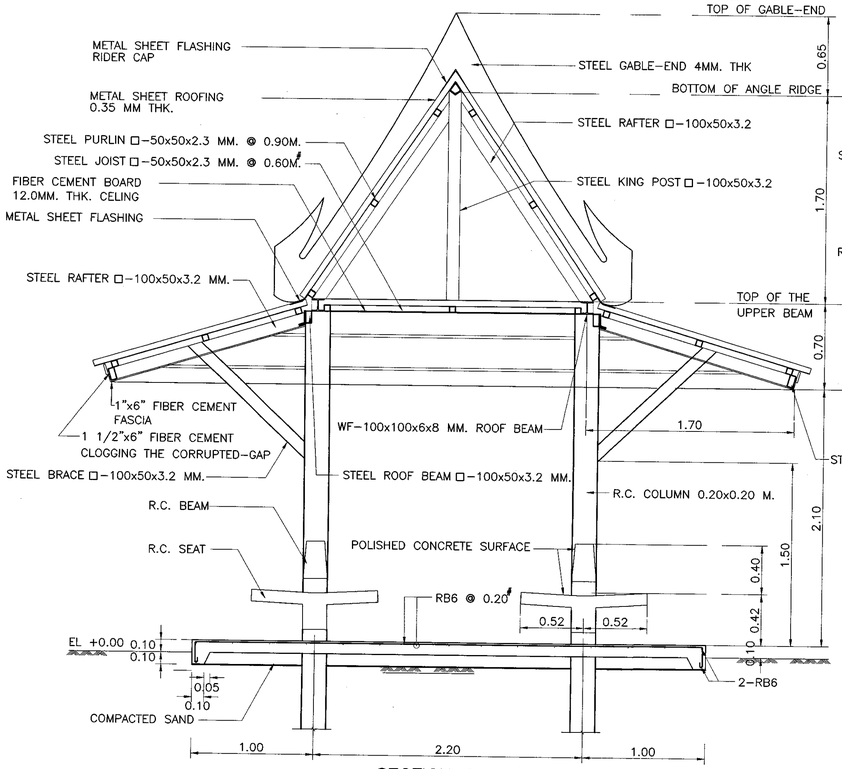

SECTION A - A

SCALE 1 : 25

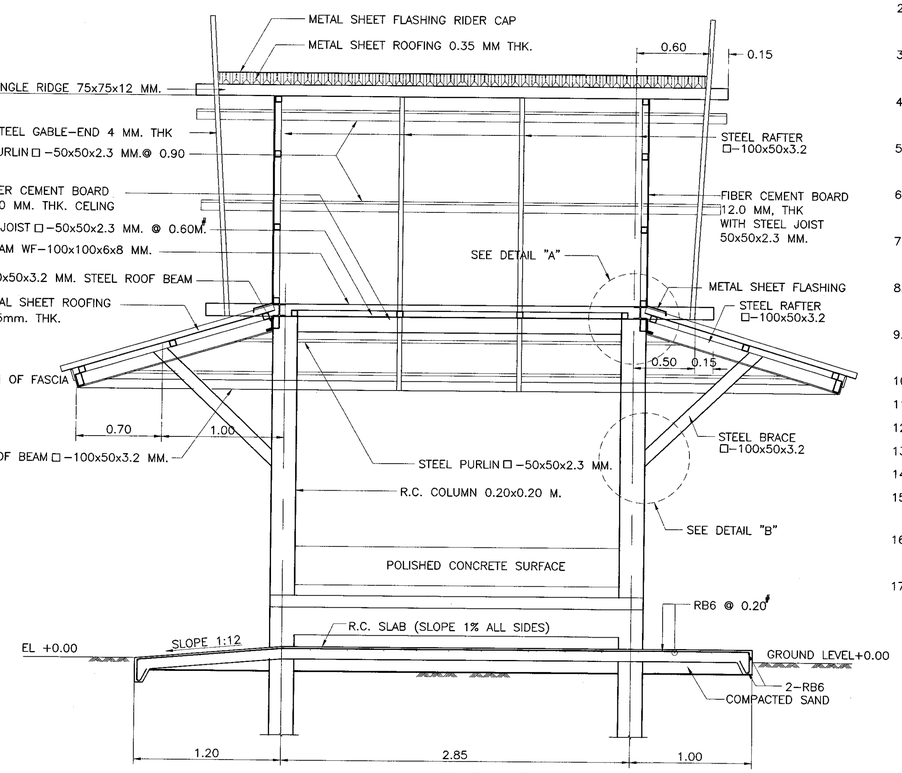

SECTION B - B

SCALE 1 : 25

REF.	REVISION	SIGNATURE	DATE

KINGDOM OF THAILAND

MINISTRY OF TRANSPORT

DEPARTMENT OF HIGHWAYS

STANDARD DRAWING

REINFORCE CONCRETE & STEEL BUS STOP SHELTER TYPE A : SMALL TYPE ON GROUND

DESIGNED : D.O.H. & CONSULTANTS	**CHECKED :** BUREAU OF LOCATION & DESIGN	**DATE :** OCT 2015
SUBMITTED : (DIRECTOR OF LOCATION & DESIGN BUREAU)		**SCALE :** AS SHOWN
APPROVED : (FOR DIRECTOR GENERAL)		**DWG NO.** EN-302
		SHEET NO. 164

D:\std dwg 2015\EN-302(REV00)

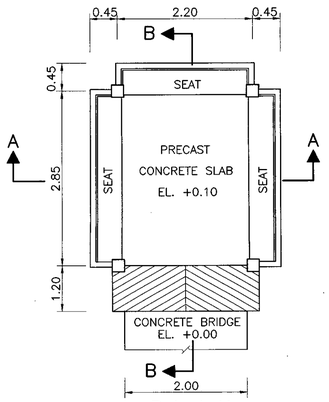

PLAN

SCALE 1 : 50

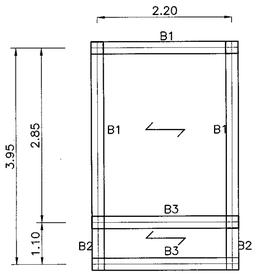

FLOOR, SLAB & BEAM PLAN

SCALE 1 : 50

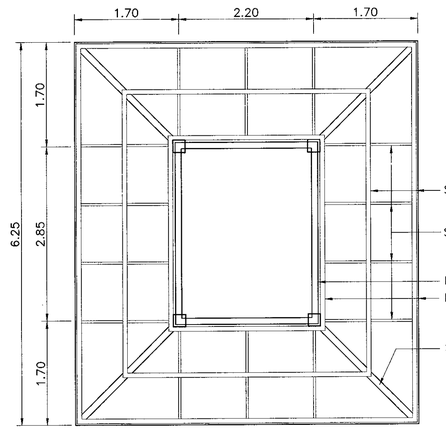

ROOF FRAMING PLAN

SCALE 1 : 50

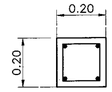

COLUMN DETAIL

SCALE 1 : 12.5

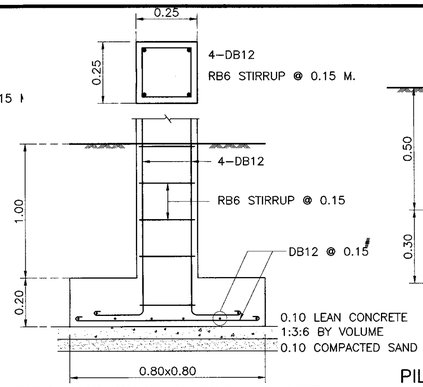

PIER AND SPREAD FOOTING DETAILS

SCALE 1 : 12.5

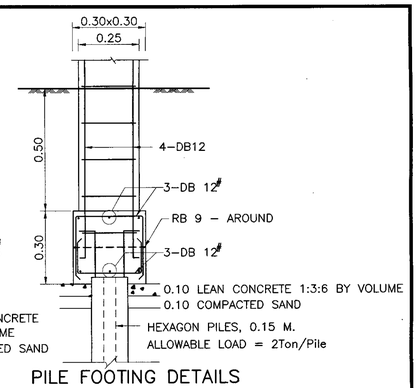

PILE FOOTING DETAILS

SCALE 1 : 12.5

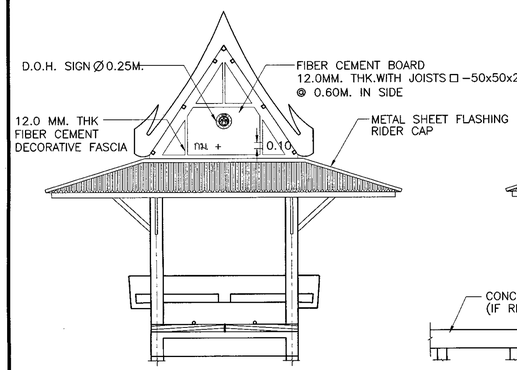

FRONT ELEVATION

SCALE 1 : 50

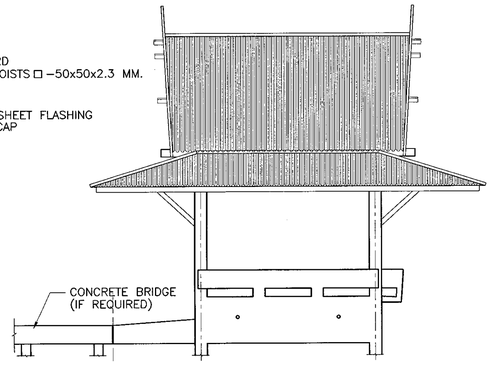

SIDE ELEVATION

SCALE 1 : 50

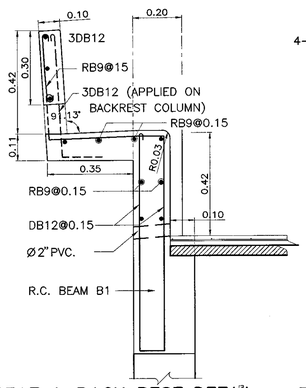

SEAT & BACK REST DETAIL

SCALE 1 : 12.5

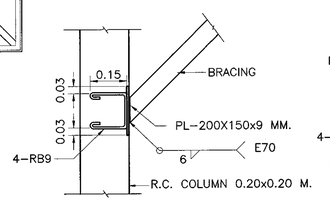

DETAIL "B"

SCALE 1 : 12.5

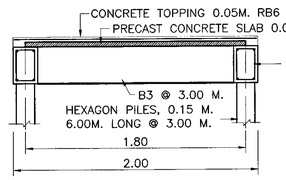

CONCRETE BRIDGE DETAILS

SCALE 1 : 25

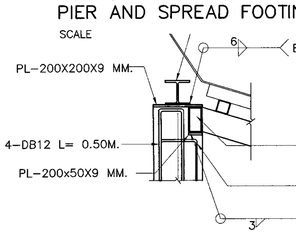

DETAIL "A"

SCALE 1 : 12.5

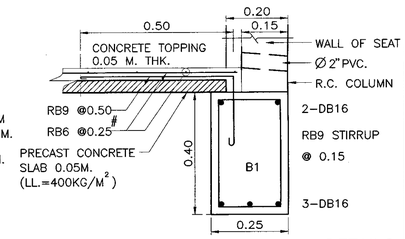

B1 & PRECAST SLAB DETAILS

SCALE 1:10

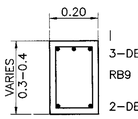

DETAIL B2

SCALE 1 : 12.5

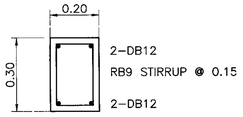

DETAIL B3

SCALE 1 : 12.5

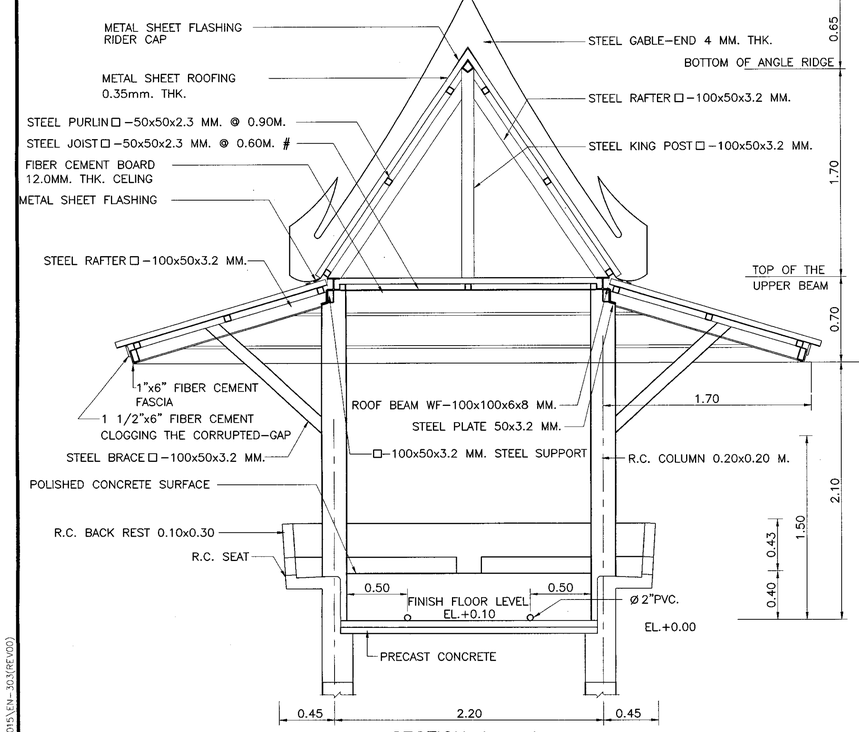

SECTION A – A

SCALE 1 : 25

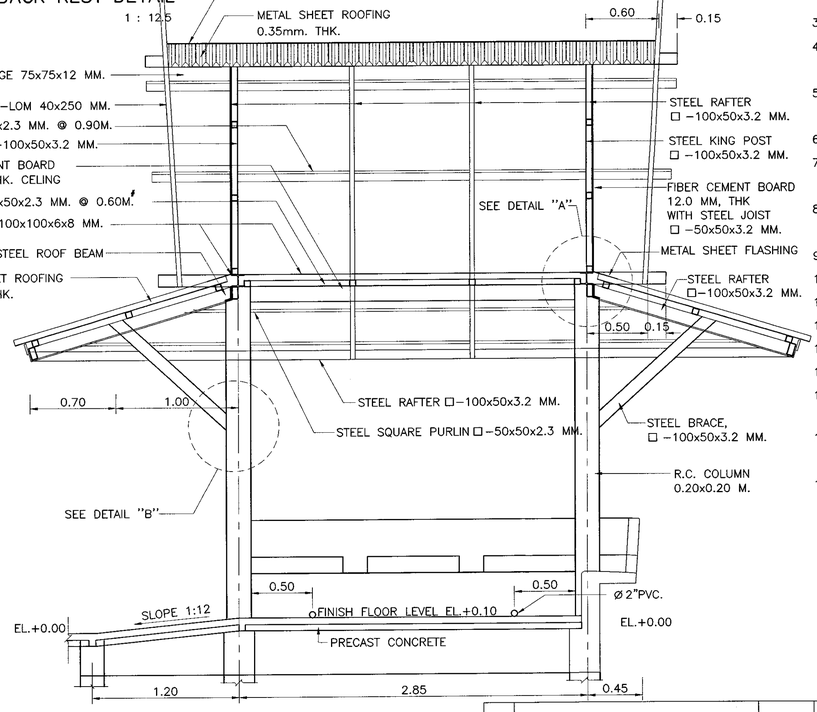

SECTION B – B

SCALE 1 : 25

NOTE :

1. DIMENSIONS ARE IN METERS UNLESS OTHERWISE INDICATED.
2. CONCRETE SHALL HAVE A MINIMUM ULTIMATE COMPRESSIVE STRENGTH OF 20 MPa (204 KSC) FOR 15x15x15 CM. CUBE AT 28 DAYS,
3. CEMENT SHALL CONFORM TO TIS. 15 TYPE I PORTLAND CEMENT OR APPROVAL TYPE
4. REINFORCING STEEL SHALL CONFORM TO TIS. 20 GRADE SR 24 FOR ROUND BARS AND TIS. 24 GRADE SD 40 FOR DEFORM BARS.
5. HOT ROLLED STRUCTURAL STEEL SECTIONS SHALL CONFORM TO TIS. 1227 GRADE SM 400.
6. HOLLOW STRUCTURAL STEEL SECTIONS SHALL CONFORM TO TIS. 107 GRADE HS 41.
7. ELEVATION±0.00 AS SHOWN IN THIS DRAWING, INDICATES THE ROADWAY SHOULDER ELEVATION.
8. A PATH FROM SHOULDER EDGE TO THE SHELTER SHALL BE PROVIDED BY 1.20 M. WIDE AT REQUIRED SLOPE 1:12
9. METAL SHEET ROOFING SHALL CONFORM TO TIS. 1128 AND COLORED IN GREEN.
10. DURABLE EMULSION PAINT SHALL CONFORM TO TIS. 2321
11. CONCRETE COLUMN SHALL BE PAINTED IN DARK BROWN COLOR
12. ANTI–CORROSIVE PRIMER PAINT SHALL CONFORM TO TIS.2387
13. FIBER CEMENT BOARD SHALL CONFORM TO TIS. 1427
14. GABLE–END, FASCIA AND CEILING SHALL BE PAINTED IN WHITE COLOR.
15. THE MINIMUM WELDING THICKNESS SHALL BE 75% OF THICK MEMBER FILLET WELD OR 3 MM. THE WELDING SHALL CONFORM TO AWS AND TIS. 49
16. EDGE OF SEAT AND BACK REST SHALL BE CURVED WITHOUT SHARP AND SURFACE SHALL BE POLISHED AS WELL AS FLOOR FINISHING
17. SPREAD FOOTING SHALL BE USED FOR ALLOWABLE SOIL BEARING CAPACITY UNDER THE FOUNDATION MORE THAN 4 TON/M²

KINGDOM OF THAILAND

MINISTRY OF TRANSPORT

DEPARTMENT OF HIGHWAYS

STANDARD DRAWING

REINFORCE CONCRETE & STEEL BUS STOP SHELTER
TYPE B : SMALL TYPE ON BEAM

DESIGNED : D.O.H. & CONSULTANTS	CHECKED : BUREAU OF LOCATION & DESIGN	DATE : OCT 2015
SUBMITTED : (DIRECTOR OF LOCATION & DESIGN BUREAU)		SCALE : AS SHOWN
APPROVED : (FOR DIRECTOR GENERAL)		DWG NO. EN–303
		SHEET NO. 165

REF.	REVISION	SIGNATURE	DATE

D:\std dwg 2015\EN-303(REV00)

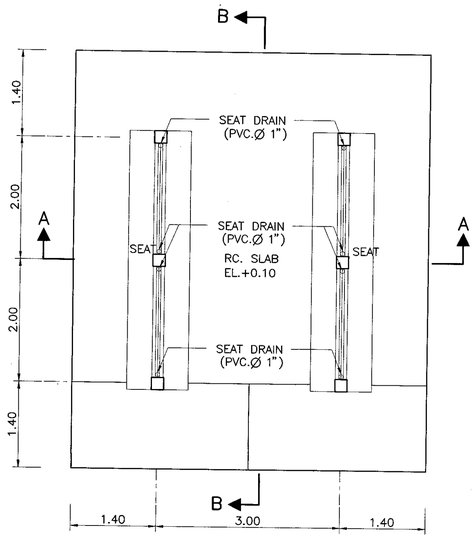

P L A N
SCALE 1 : 50

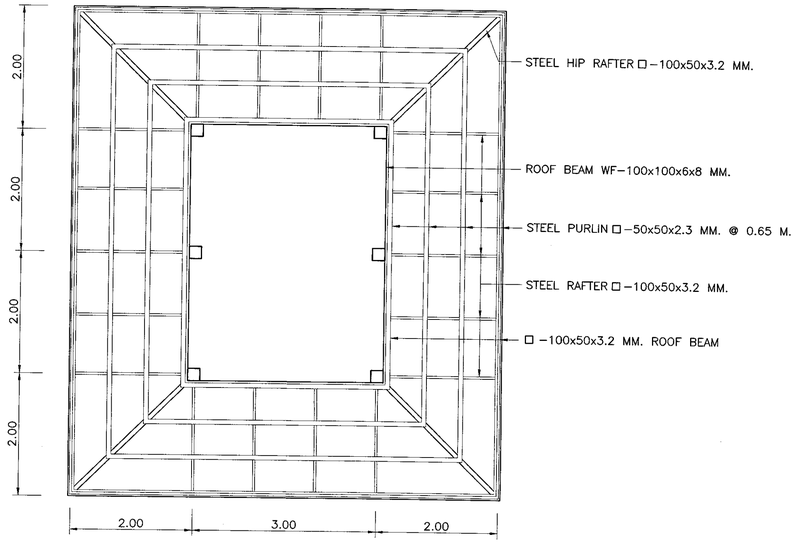

ROOF FRAMING PLAN
SCALE 1 : 50

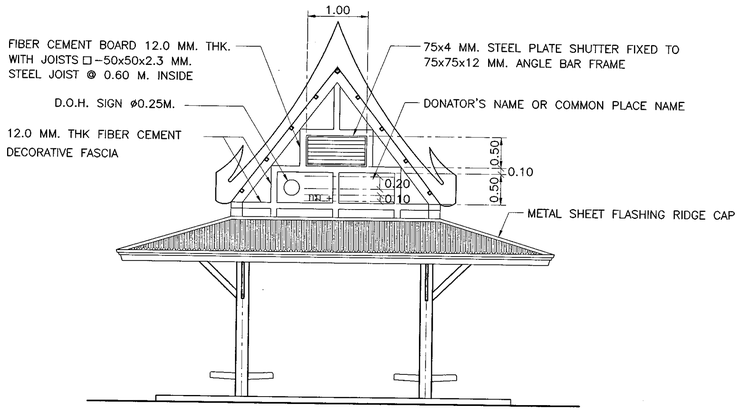

FRONT ELEVATION
SCALE 1 : 50

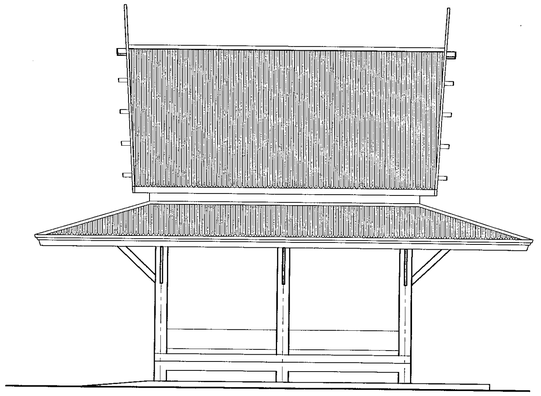

SIDE ELEVATION
SCALE 1 : 50

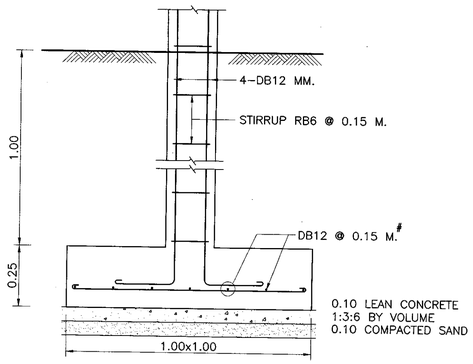

SPREAD FOOTING DETAILS
SCALE 1 : 12.5

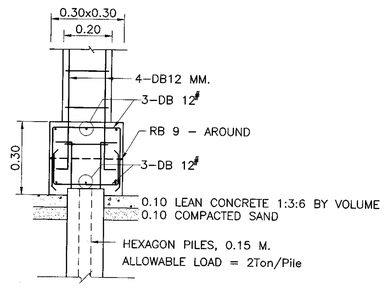

PILE FOOTING DETAILS
SCALE 1 : 12.5

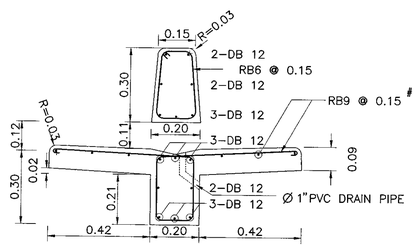

SEAT AND BACK REST DETAIL
SCALE 1 : 12.5



PIER AND COLUMN DETAILS
SCALE 1 : 12.5

NOTES :

1. DIMENSIONS ARE IN METERS UNLESS OTHERWISE INDICATED.
2. CONCRETE SHALL HAVE A MINIMUM ULTIMATE COMPRESSIVE STRENGTH OF 20 MPa (204 KSC) FOR 15x15x15 CM. CUBE AT 28 DAYS,
3. CEMENT SHALL CONFORM TO TIS. 15 TYPE I PORTLAND CEMENT OR APPROVAL TYPE
4. REINFORCING STEEL SHALL CONFORM TO TIS. 20 GRADE SR 24 FOR ROUND BARS AND TIS. 24 GRADE SD 40 FOR DEFORM BARS.
5. HOT ROLLED STRUCTURAL STEEL SECTIONS SHALL CONFORM TO TIS. 1227 GRADE SM 400.
6. HOLLOW STRUCTURAL STEEL SECTIONS SHALL CONFORM TO TIS. 107 GRADE HS 41.
7. ELEVATION±0.00 AS SHOWN IN THIS DRAWING, INDICATES THE ROADWAY SHOULDER ELEVATION.
8. A PATH FROM SHOULDER EDGE TO THE SHELTER SHALL BE PROVIDED BY 1.20 M. WIDE AT REQUIRED SLOPE 1:12
9. METAL SHEET ROOFING SHALL CONFORM TO TIS. 1128 AND COLORED IN GREEN.
10. DURABLE EMULSION PAINT SHALL CONFORM TO TIS. 2321
11. CONCRETE COLUMN SHALL BE PAINTED IN DARK BROWN COLOR
12. ANTI–CORROSIVE PRIMER PAINT SHALL CONFORM TO TIS.2387
13. FIBER CEMENT BOARD SHALL CONFORM TO TIS. 1427
14. GABLE–END, FASCIA AND CEILING SHALL BE PAINTED IN WHITE COLOR.
15. THE MINIMUM WELDING THICKNESS SHALL BE 75% OF THICK MEMBER FILLET WELD OR 3 MM. THE WELDING SHALL CONFORM TO AWS AND TIS. 49
16. EDGE OF SEAT AND BACK REST SHALL BE CURVED WITHOUT SHARP AND SURFACE SHALL BE POLISHED AS WELL AS FLOOR FINISHING
17. SPREAD FOOTING SHALL BE USED FOR ALLOWABLE SOIL BEARING CAPACITY UNDER THE FOUNDATION MORE THAN 4 TON/M²

KINGDOM OF THAILAND

MINISTRY OF TRANSPORT
DEPARTMENT OF HIGHWAYS

STANDARD DRAWING

REINFORCE CONCRETE & STEEL BUS STOP SHELTER TYPE C: LARGE TYPE ON GROUND – I

DESIGNED : D.O.H. & CONSULTANTS	CHECKED : BUREAU OF LOCATION & DESIGN		DATE : OCT 2015
SUBMITTED : (DIRECTOR OF LOCATION & DESIGN BUREAU)			SCALE : AS SHOWN
APPROVED : (FOR DIRECTOR GENERAL)			DWG NO. EN–304
			SHEET NO. 166

REF.	REVISION	SIGNATURE	DATE

D:\std dwg 2015\EN-304(REV00)

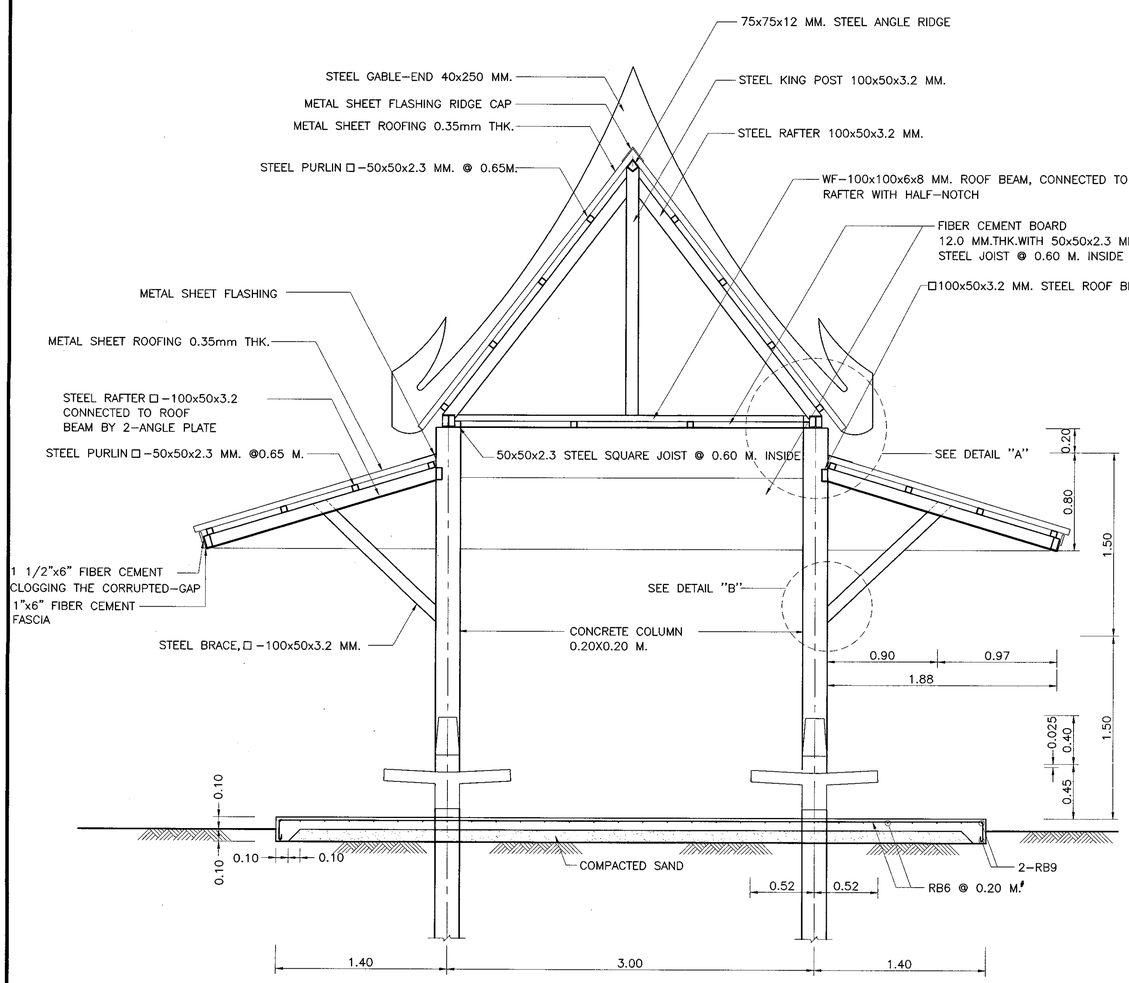

SECTION A – A
SCALE 1 : 25

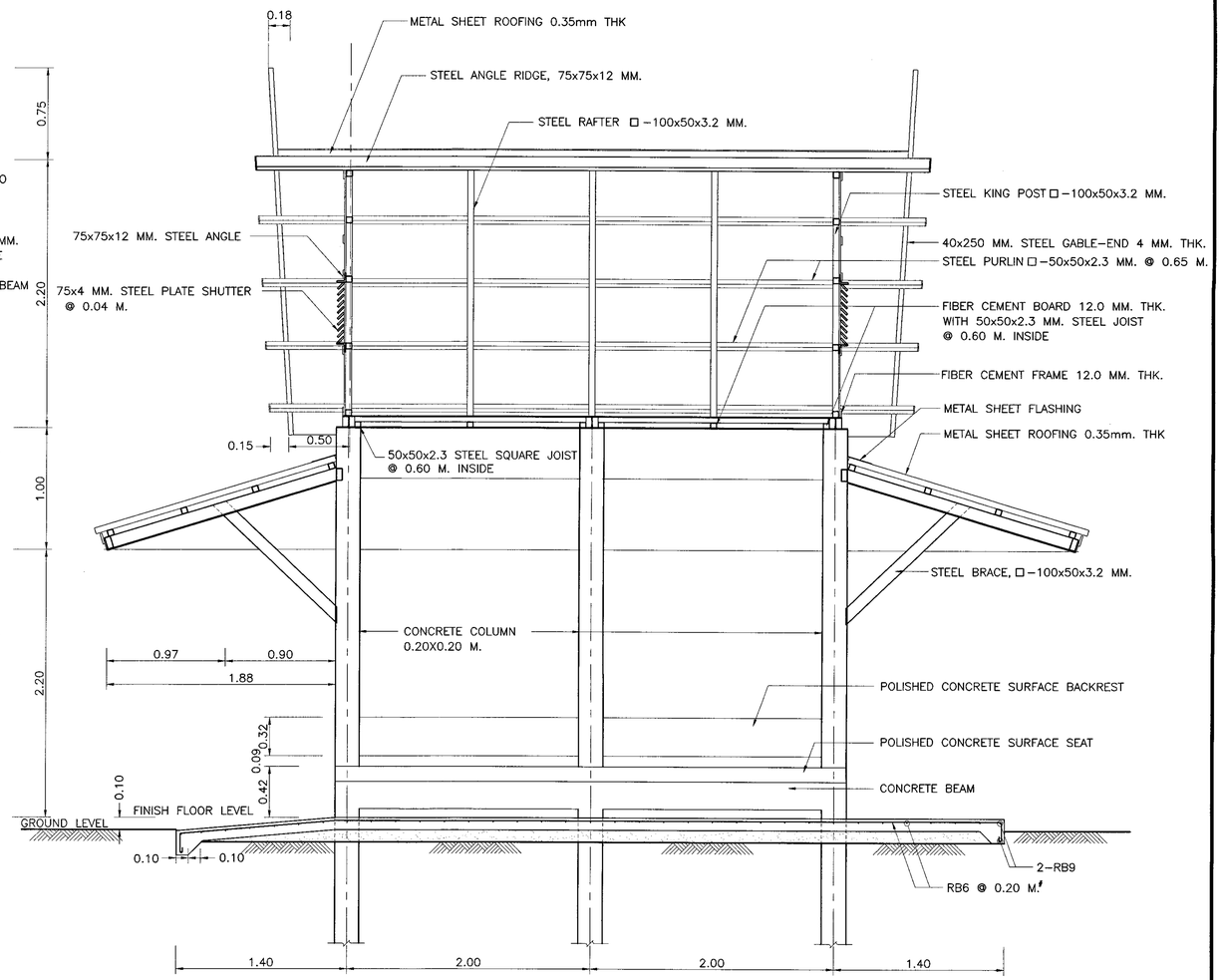

SECTION B – B
SCALE 1 : 25

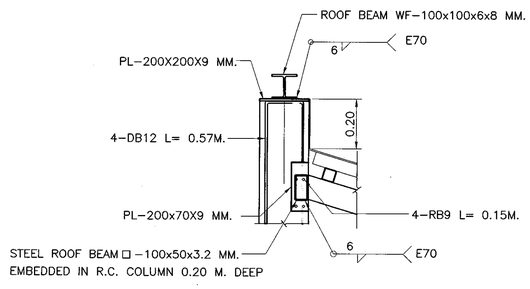

DETAIL "A"
SCALE 1 : 12.5

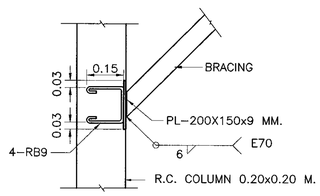

DETAIL "B"
SCALE 1 : 12.5

NOTES :

1. DIMENSIONS ARE IN METERS UNLESS OTHERWISE INDICATED.
2. CONCRETE SHALL HAVE A MINIMUM ULTIMATE COMPRESSIVE STRENGTH OF 20 MPa (204 KSC) FOR 15x15x15 CM. CUBE AT 28 DAYS,
3. CEMENT SHALL CONFORM TO TIS. 15 TYPE I PORTLAND CEMENT OR APPROVAL TYPE
4. REINFORCING STEEL SHALL CONFORM TO TIS. 20 GRADE SR 24 FOR ROUND BARS AND TIS. 24 GRADE SD 40 FOR DEFORM BARS.
5. HOT ROLLED STRUCTURAL STEEL SECTIONS SHALL CONFORM TO TIS. 1227 GRADE SM 400.
6. HOLLOW STRUCTURAL STEEL SECTIONS SHALL CONFORM TO TIS. 107 GRADE HS 41.
7. ELEVATION±0.00 AS SHOWN IN THIS DRAWING, INDICATES THE ROADWAY SHOULDER ELEVATION.
8. A PATH FROM SHOULDER EDGE TO THE SHELTER SHALL BE PROVIDED BY 1.20 M. WIDE AT REQUIRED SLOPE 1:12
9. METAL SHEET ROOFING SHALL CONFORM TO TIS. 1128 AND COLORED IN GREEN.
10. DURABLE EMULSION PAINT SHALL CONFORM TO TIS. 2321
11. CONCRETE COLUMN SHALL BE PAINTED IN DARK BROWN COLOR
12. ANTI-CORROSIVE PRIMER PAINT SHALL CONFORM TO TIS.2387
13. FIBER CEMENT BOARD SHALL CONFORM TO TIS. 1427
14. GABLE-END, FASCIA AND CEILING SHALL BE PAINTED IN WHITE COLOR.
15. THE MINIMUM WELDING THICKNESS SHALL BE 75% OF THICK MEMBER FILLET WELD OR 3 MM. THE WELDING SHALL CONFORM TO AWS AND TIS. 49
16. EDGE OF SEAT AND BACK REST SHALL BE CURVED WITHOUT SHARP AND SURFACE SHALL BE POLISHED AS WELL AS FLOOR FINISHING
17. SPREAD FOOTING SHALL BE USED FOR ALLOWABLE SOIL BEARING CAPACITY UNDER THE FOUNDATION MORE THAN 4 TON/M^2

KINGDOM OF THAILAND
MINISTRY OF TRANSPORT
DEPARTMENT OF HIGHWAYS

STANDARD DRAWING

REINFORCE CONCRETE & STEEL BUS STOP SHELTER
TYPE C : LARGE TYPE ON GROUND – II

DESIGNED : D.O.H. & CONSULTANTS	**CHECKED :** BUREAU OF LOCATION & DESIGN		**DATE :** OCT 2015
SUBMITTED :	(DIRECTOR OF LOCATION & DESIGN BUREAU)		**SCALE :** AS SHOWN
			DWG NO. EN-305
APPROVED :	(FOR DIRECTOR GENERAL)		**SHEET NO.** 167

REF.	REVISION	SIGNATURE	DATE

D:\std dwg 2015\EN-305(REV00)

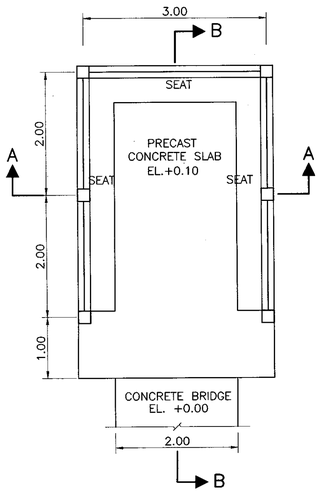

PLAN
SCALE 1 : 50

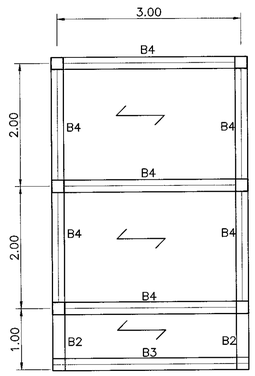

FLOOR, SLAB & BEAM PLAN
SCALE 1 : 50

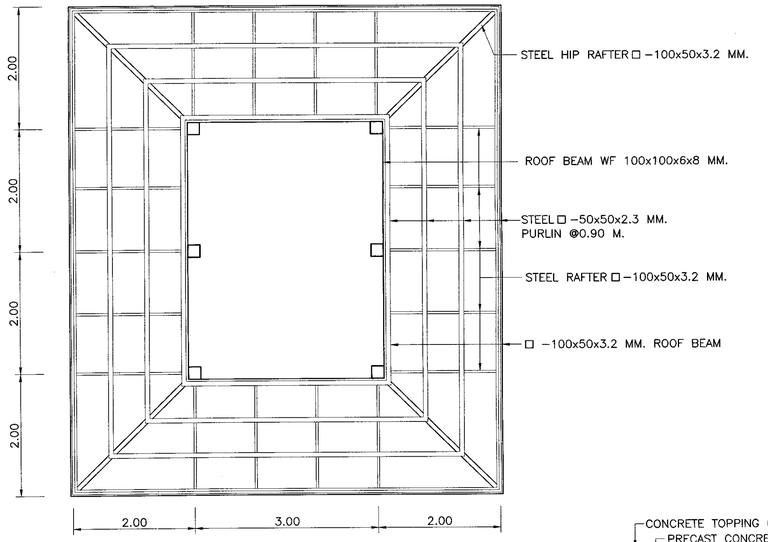

ROOF FRAMING PLAN
SCALE 1 : 50

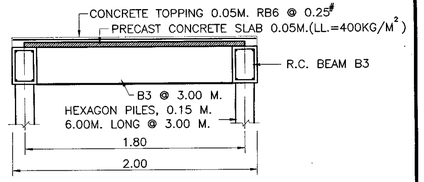

CONCRETE BRIDGE DETAILS
SCALE 1 : 25

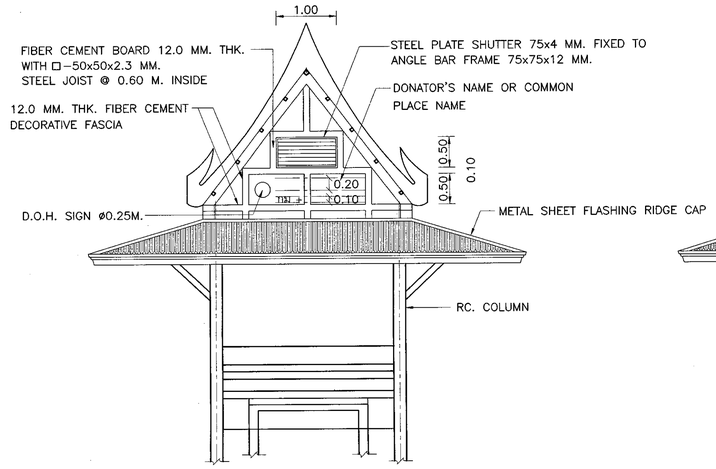

FRONT ELEVATION
SCALE 1 : 50

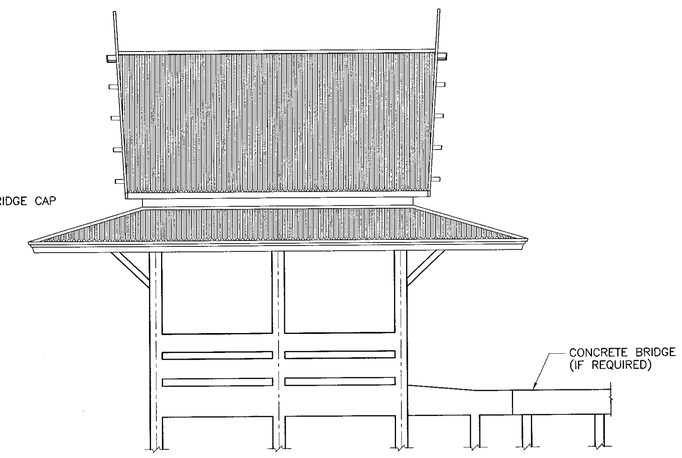

SIDE ELEVATION
SCALE 1 : 50

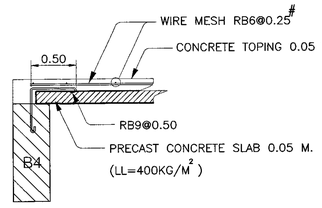

PRECAST SLAB DETAIL
SCALE 1:10

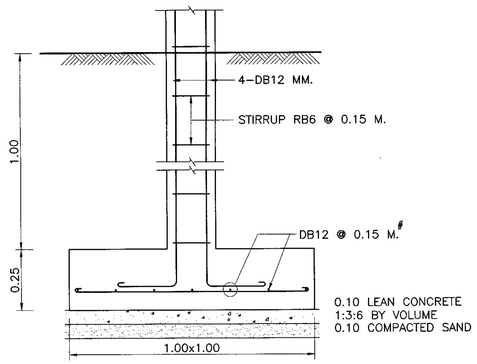

SPREAD FOOTING DETAILS
SCALE 1 : 12.5

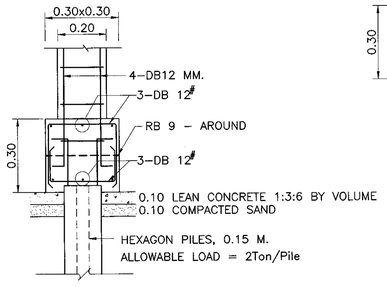

PILE FOOTING DETAILS
SCALE 1 : 12.5

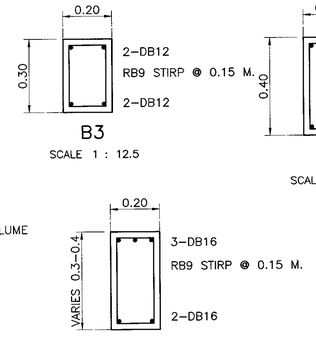

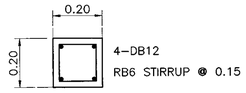

PIER & COLUMN DETAILS
SCALE 1 : 12.5

NOTES :

1. DIMENSIONS ARE IN METERS UNLESS OTHERWISE INDICATED.
2. CONCRETE SHALL HAVE A MINIMUM ULTIMATE COMPRESSIVE STRENGTH OF 20 MPa (204 KSC) FOR 15x15x15 CM. CUBE AT 28 DAYS,
3. CEMENT SHALL CONFORM TO TIS. 15 TYPE I PORTLAND CEMENT OR APPROVAL TYPE
4. REINFORCING STEEL SHALL CONFORM TO TIS. 20 GRADE SR 24 FOR ROUND BARS AND TIS. 24 GRADE SD 40 FOR DEFORM BARS.
5. HOT ROLLED STRUCTURAL STEEL SECTIONS SHALL CONFORM TO TIS. 1227 GRADE SM 400.
6. HOLLOW STRUCTURAL STEEL SECTIONS SHALL CONFORM TO TIS. 107 GRADE HS 41.
7. ELEVATION±0.00 AS SHOWN IN THIS DRAWING, INDICATES THE ROADWAY SHOULDER ELEVATION.
8. A PATH FROM SHOULDER EDGE TO THE SHELTER SHALL BE PROVIDED BY 1.20 M. WIDE AT REQUIRED SLOPE 1:12
9. METAL SHEET ROOFING SHALL CONFORM TO TIS. 1128 AND COLORED IN GREEN.
10. DURABLE EMULSION PAINT SHALL CONFORM TO TIS. 2321
11. CONCRETE COLUMN SHALL BE PAINTED IN DARK BROWN COLOR
12. ANTI-CORROSIVE PRIMER PAINT SHALL CONFORM TO TIS.2387
13. FIBER CEMENT BOARD SHALL CONFORM TO TIS. 1427
14. GABLE-END, FASCIA AND CEILING SHALL BE PAINTED IN WHITE COLOR.
15. THE MINIMUM WELDING THICKNESS SHALL BE 75% OF THICK MEMBER FILLET WELD OR 3 MM. THE WELDING SHALL CONFORM TO AWS AND TIS. 49
16. EDGE OF SEAT AND BACK REST SHALL BE CURVED WITHOUT SHARP AND SURFACE SHALL BE POLISHED AS WELL AS FLOOR FINISHING
17. SPREAD FOOTING SHALL BE USED FOR ALLOWABLE SOIL BEARING CAPACITY UNDER THE FOUNDATION MORE THAN 4 TON/M^2

KINGDOM OF THAILAND

MINISTRY OF TRANSPORT
DEPARTMENT OF HIGHWAYS

STANDARD DRAWING

REINFORCE CONCRETE & STEEL BUS STOP SHELTER
TYPE D : LARGE TYPE ON BEAM - I

DESIGNED : D.O.H. & CONSULTANTS	**CHECKED :** BUREAU OF LOCATION & DESIGN		**DATE :** OCT 2015
SUBMITTED : (DIRECTOR OF LOCATION & DESIGN BUREAU)			**SCALE :** AS SHOWN
			DWG NO. EN-306
APPROVED : (FOR DIRECTOR GENERAL)			**SHEET NO.** 168

REF.	REVISION	SIGNATURE	DATE

D:\std dwg 2015\EN-306(REV00)

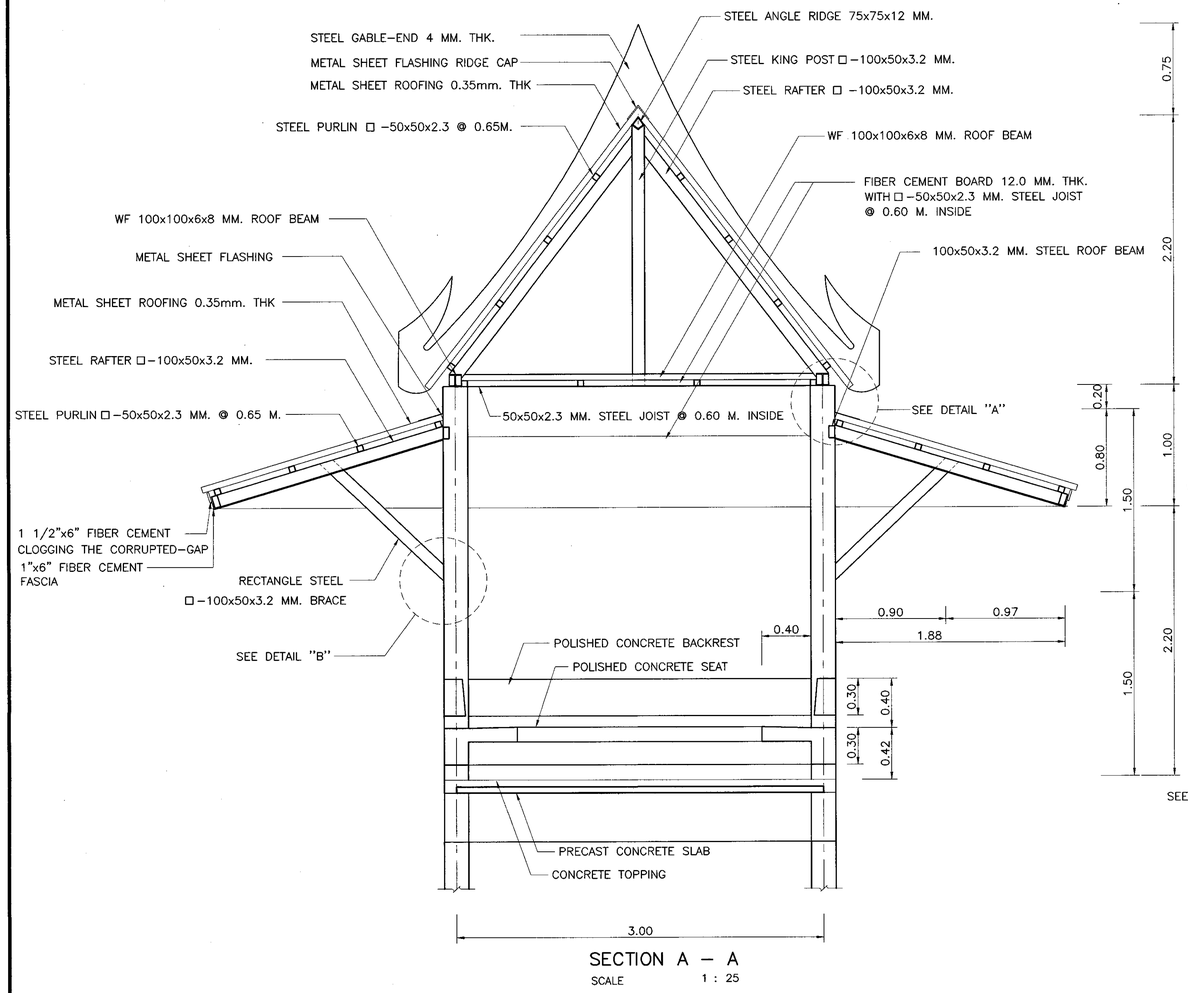

SECTION A – A

SCALE 1 : 25

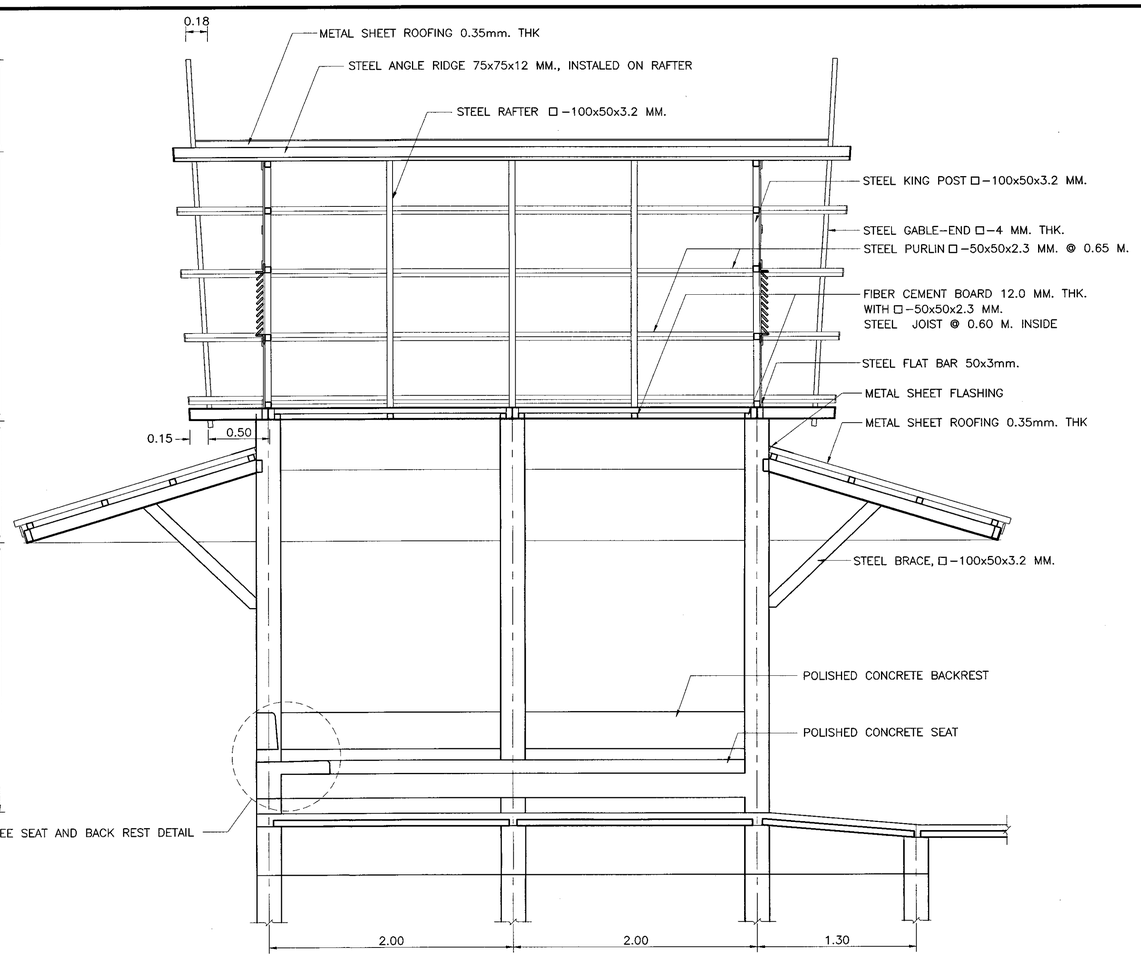

SECTION B – B

SCALE 1 : 25

NOTES :

1. DIMENSIONS ARE IN METERS UNLESS OTHERWISE INDICATED.
2. CONCRETE SHALL HAVE A MINIMUM ULTIMATE COMPRESSIVE STRENGTH OF 20 MPa (204 KSC) FOR 15x15x15 CM. CUBE AT 28 DAYS,
3. CEMENT SHALL CONFORM TO TIS. 15 TYPE I PORTLAND CEMENT OR APPROVAL TYPE
4. REINFORCING STEEL SHALL CONFORM TO TIS. 20 GRADE SR 24 FOR ROUND BARS AND TIS. 24 GRADE SD 40 FOR DEFORM BARS.
5. HOT ROLLED STRUCTURAL STEEL SECTIONS SHALL CONFORM TO TIS. 1227 GRADE SM 400.
6. HOLLOW STRUCTURAL STEEL SECTIONS SHALL CONFORM TO TIS. 107 GRADE HS 41.
7. ELEVATION±0.00 AS SHOWN IN THIS DRAWING, INDICATES THE ROADWAY SHOULDER ELEVATION.
8. A PATH FROM SHOULDER EDGE TO THE SHELTER SHALL BE PROVIDED BY 1.20 M. WIDE AT REQUIRED SLOPE 1:12
9. METAL SHEET ROOFING SHALL CONFORM TO TIS. 1128 AND COLORED IN GREEN.
10. DURABLE EMULSION PAINT SHALL CONFORM TO TIS. 2321
11. CONCRETE COLUMN SHALL BE PAINTED IN DARK BROWN COLOR
12. ANTI–CORROSIVE PRIMER PAINT SHALL CONFORM TO TIS.2387
13. FIBER CEMENT BOARD SHALL CONFORM TO TIS. 1427
14. GABLE–END, FASCIA AND CEILING SHALL BE PAINTED IN WHITE COLOR.
15. THE MINIMUM WELDING THICKNESS SHALL BE 75% OF THICK MEMBER FILLET WELD OR 3 MM. THE WELDING SHALL CONFORM TO AWS AND TIS. 49
16. EDGE OF SEAT AND BACK REST SHALL BE CURVED WITHOUT SHARP AND SURFACE SHALL BE POLISHED AS WELL AS FLOOR FINISHING
17. SPREAD FOOTING SHALL BE USED FOR ALLOWABLE SOIL BEARING CAPACITY UNDER THE FOUNDATION MORE THAN 4 TON/M^2

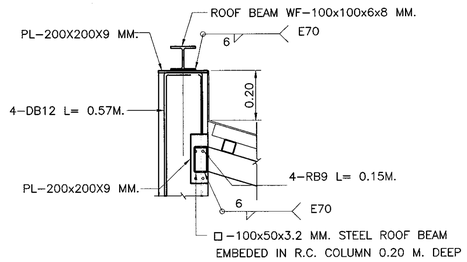

DETAIL "A"

SCALE 1 : 12.5

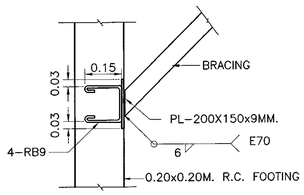

DETAIL "B"

SCALE 1 : 12.5

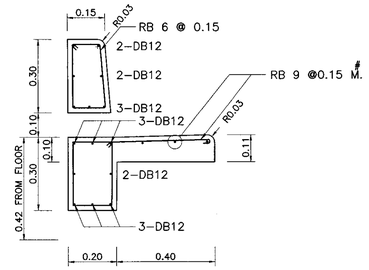

SEAT AND BACK REST DETAIL

SCALE 1 : 12.5

KINGDOM OF THAILAND

MINISTRY OF TRANSPORT

DEPARTMENT OF HIGHWAYS

STANDARD DRAWING

REINFORCE CONCRETE & STEEL BUS STOP SHELTER

TYPE D : LARGE TYPE ON BEAM – II

DESIGNED : D.O.H. & CONSULTANTS	CHECKED : BUREAU OF LOCATION & DESIGN		DATE : OCT 2015
SUBMITTED :	(DIRECTOR OF LOCATION & DESIGN BUREAU)		SCALE : AS SHOWN
APPROVED :	(FOR DIRECTOR GENERAL)		DWG NO. EN–307
			SHEET NO. 169

REF.	REVISION	SIGNATURE	DATE

D:\std dwg 2015\EN-307(REV00)

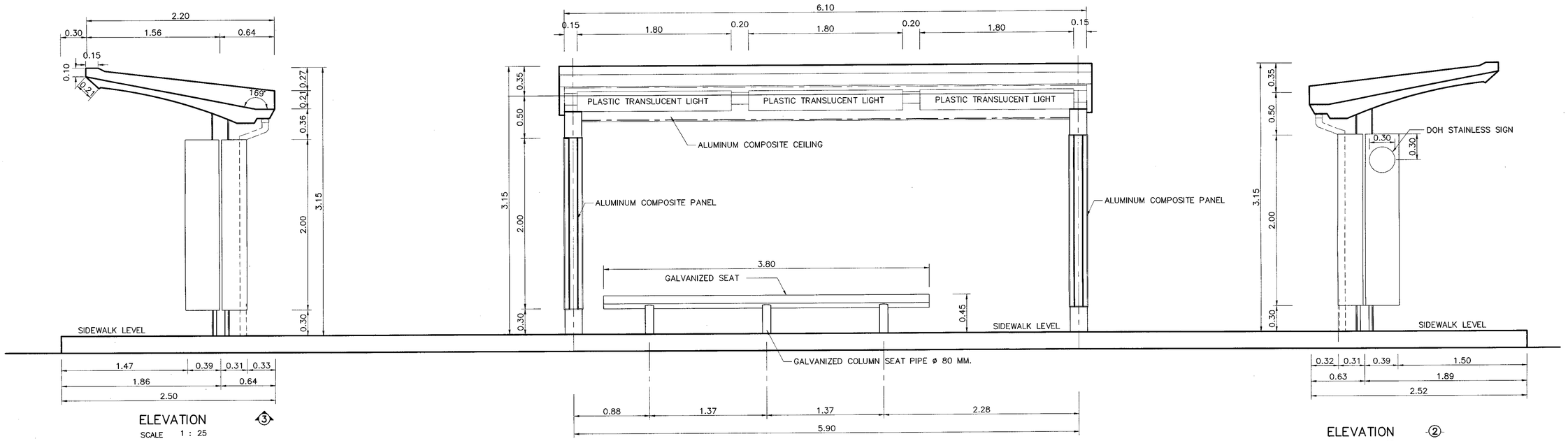

ELEVATION ③
SCALE 1 : 25

ELEVATION ①
SCALE 1 : 25

ELEVATION ②
SCALE 1 : 25

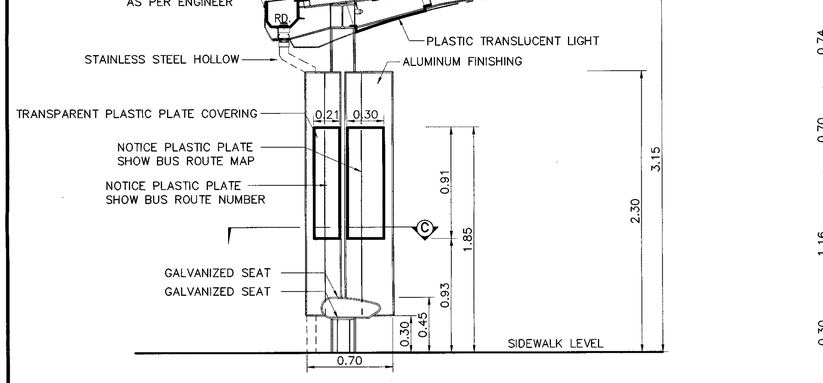

SECTION A
SCALE 1 : 25

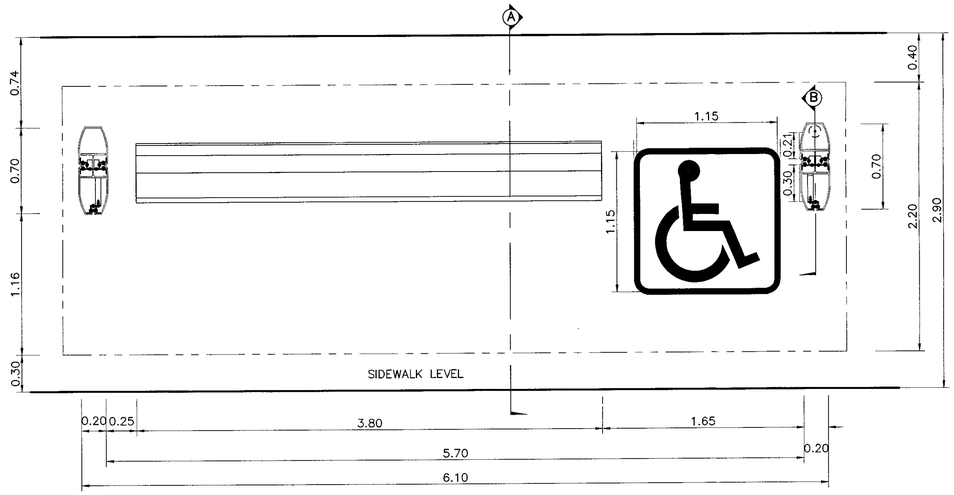

PLAN
SCALE 1 : 25

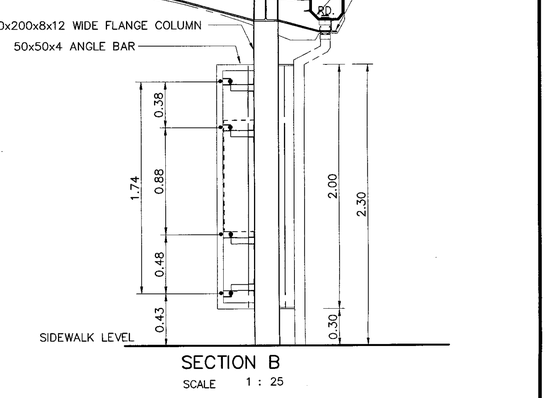

SECTION B
SCALE 1 : 25

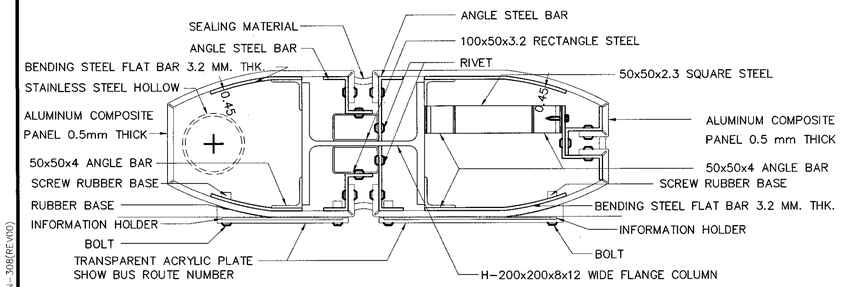

SECTION C- ALUMINUM COMPOSITE INSTALLATION DETAIL
SCALE 1 : 5

NOTE :

1. DIMENSIONS ARE IN METERS UNLESS OTHERWISE INDICATED.
2. CONCRETE SHALL HAVE A MINIMUM ULTIMATE COMPRESSIVE STRENGTH OF 20 MPa (204 KSC) FOR 15x15x15 CM. CUBE AT 28 DAYS,
3. CEMENT SHALL CONFORM TO TIS. 15 TYPE I PORTLAND CEMENT OR APPROVAL TYPE.
4. REINFORCING STEEL SHALL CONFORM TO TIS. 20 GRADE SR 24 FOR ROUND BARS AND TIS. 24 GRADE SD 40 FOR DEFORM BARS.
5. HOT ROLLED STRUCTURAL STEEL SECTIONS SHALL CONFORM TO TIS. 1227 GRADE SM 400.
6. HOLLOW STRUCTURAL STEEL SECTIONS SHALL CONFORM TO TIS. 107 GRADE HS 41.
7. BUILD-UP SECTION AND STEEL PLATE SHALL CONFORM TO TIS. 1303
8. ALL STEEL AND BOLT ASSEMBLY SHALL BE GALVANIZED ZING COATING SHALL NOT BE LESS THAN 550 GRAMS/M^2
9. METAL SHEET ROOFING SHALL CONFORM TO TIS. 1128 AND COLORED IN GREEN.
10. DURABLE EMULSION PAINT SHALL CONFORM TO TIS. 2321
11. HOT ROLLED STRUCTURE STEEL COLUMN SHALL BE PAINTED IN GREEN COLOR
12. ALUMINUM COMPOSITE PANEL SHALL CONFORM TO TIS. 2314
13. ANTI-CORROSIVE PRIMER PAINT SHALL CONFORM TO TIS.2387
14. THE MINIMUM WELDING THICKNESS SHALL BE 75% OF THICK MEMBER FILLET WELD OR 3 MM. THE WELDING SHALL CONFORM TO AWS AND TIS. 49
15. DRAINAGE FORM ROOF DRAIN SHALL BE CONNECTED TO NEAREST MANHOLE
16. SPREAD FOOTING SHALL BE USED FOR ALLOWABLE SOIL BEARING CAPACITY UNDER THE FOUNDATION MORE THAN 10 TON/M^2

REF.	REVISION	SIGNATURE	DATE

KINGDOM OF THAILAND

MINISTRY OF TRANSPORT
DEPARTMENT OF HIGHWAYS

STANDARD DRAWING

REINFORCE CONCRETE & STEEL BUS STOP SHELTER
TYPE E: WALKWAY TYPE - I

DESIGNED : D.O.H. & CONSULTANTS	**CHECKED :** BUREAU OF LOCATION & DESIGN	**DATE :** OCT 2015
SUBMITTED : (DIRECTOR OF LOCATION & DESIGN BUREAU)		**SCALE :** AS SHOWN
APPROVED : (FOR DIRECTOR GENERAL)		**DWG NO.** EN-308
		SHEET NO. 170

D:\std dwg 2015\EN-308(REV00)

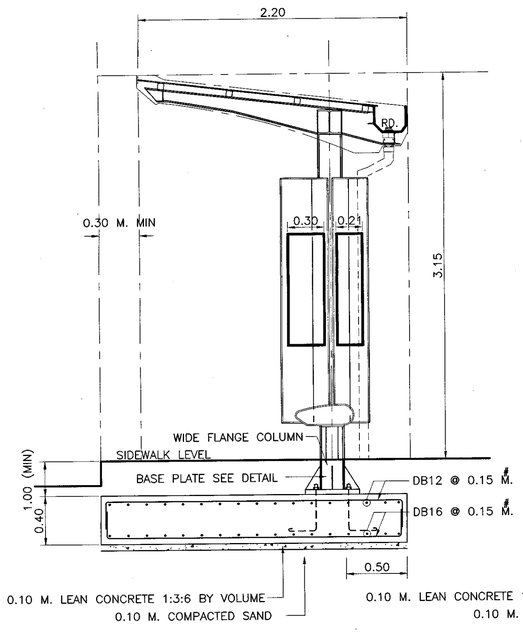

SECTION A – A

SCALE 1 : 25

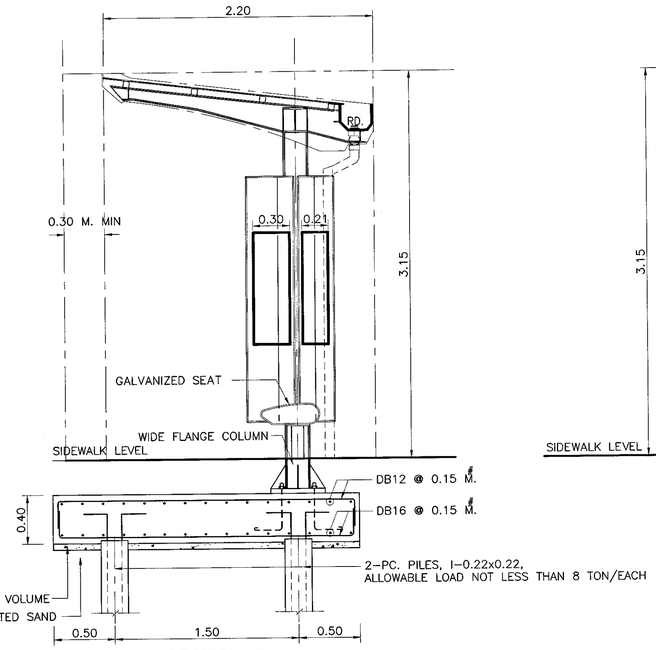

SECTION B – B

SCALE 1 : 25

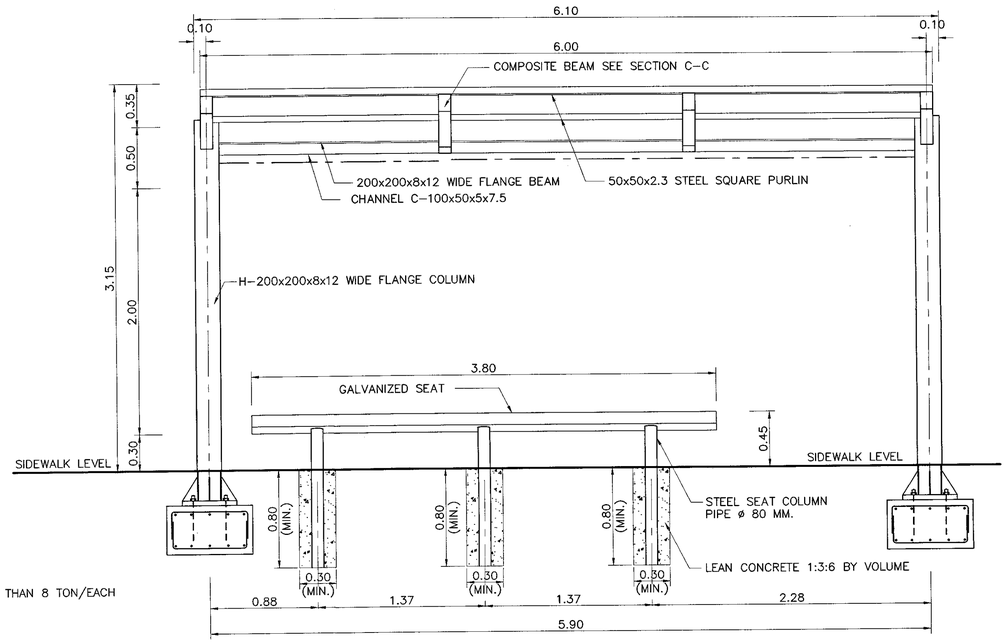

ELEVATION

SCALE 1 : 25

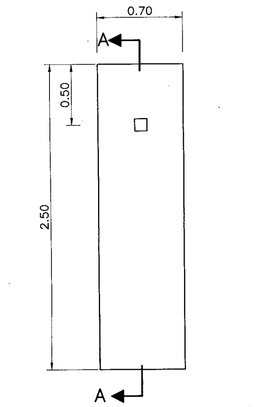

PLAN (SPREAD FOOTING)

SCALE 1 : 25

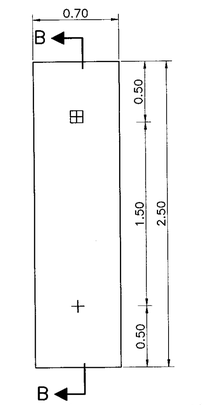

PLAN (PILE FOOTING)

SCALE 1 : 25

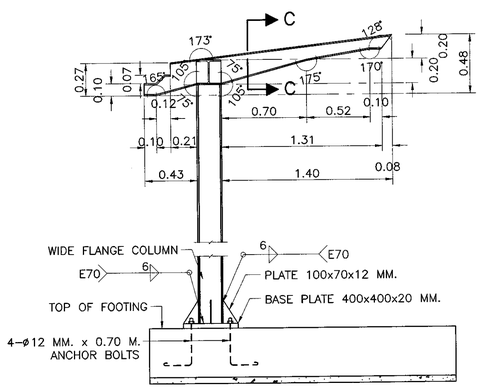

BASE PLATE & BUILD–UP BEAM DETAIL

SCALE 1 : 25

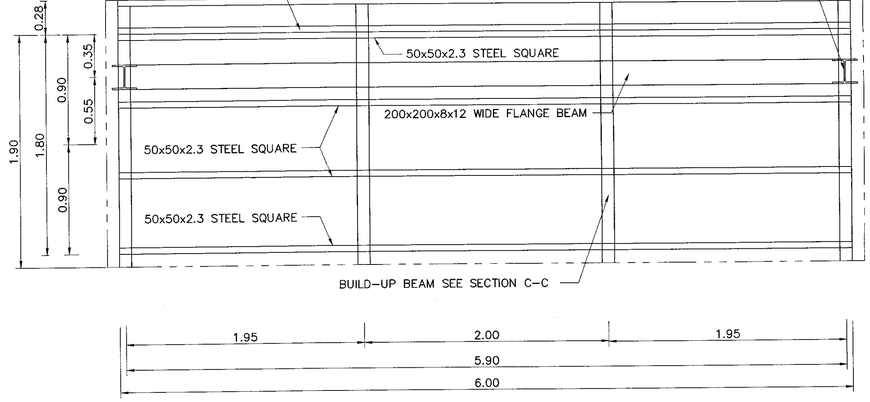

ROOF FRAMING PLAN

SCALE 1 : 25

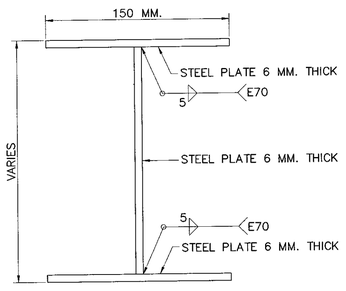

SECTION C – C (COMPOSITE BEAM)

SCALE 1 : 2.5

NOTE :

1. DIMENSIONS ARE IN METERS UNLESS OTHERWISE INDICATED.
2. CONCRETE SHALL HAVE A MINIMUM ULTIMATE COMPRESSIVE STRENGTH OF 20 MPa (204 KSC) FOR 15x15x15 CM. CUBE AT 28 DAYS,
3. CEMENT SHALL CONFORM TO TIS. 15 TYPE I PORTLAND CEMENT OR APPROVAL TYPE.
4. REINFORCING STEEL SHALL CONFORM TO TIS. 20 GRADE SR 24 FOR ROUND BARS AND TIS. 24 GRADE SD 40 FOR DEFORM BARS.
5. HOT ROLLED STRUCTURAL STEEL SECTIONS SHALL CONFORM TO TIS. 1227 GRADE SM 400.
6. HOLLOW STRUCTURAL STEEL SECTIONS SHALL CONFORM TO TIS. 107 GRADE HS 41.
7. BUILD–UP SECTION AND STEEL PLATE SHALL CONFORM TO TIS. 1303
8. ALL STEEL AND BOLT ASSEMBLY SHALL BE GALVANIZED ZING COATING SHALL NOT BE LESS THAN 550 GRAMS/M^2
9. METAL SHEET ROOFING SHALL CONFORM TO TIS. 1128 AND COLORED IN GREEN.
10. DURABLE EMULSION PAINT SHALL CONFORM TO TIS. 2321
11. HOT ROLLED STRUCTURE STEEL COLUMN SHALL BE PAINTED IN GREEN COLOR
12. ALUMINUM COMPOSITE PANEL SHALL CONFORM TO TIS. 2314
13. ANTI–CORROSIVE PRIMER PAINT SHALL CONFORM TO TIS.2387
14. THE MINIMUM WELDING THICKNESS SHALL BE 75% OF THICK MEMBER FILLET WELD OR 3 MM. THE WELDING SHALL CONFORM TO AWS AND TIS. 49
15. DRAINAGE FORM ROOF DRAIN SHALL BE CONNECTED TO NEAREST MANHOLE
16. SPREAD FOOTING SHALL BE USED FOR ALLOWABLE SOIL BEARING CAPACITY UNDER THE FOUNDATION MORE THAN 10 TON/M^2

KINGDOM OF THAILAND

MINISTRY OF TRANSPORT

DEPARTMENT OF HIGHWAYS

STANDARD DRAWING

REINFORCE CONCRETE & STEEL BUS STOP SHELTER
TYPE E: WALKWAY TYPE – II

DESIGNED : D.O.H. & CONSULTANTS	**CHECKED :** BUREAU OF LOCATION & DESIGN		**DATE :** OCT 2015
SUBMITTED :	(DIRECTOR OF LOCATION & DESIGN BUREAU)		**SCALE :** AS SHOWN
			DWG NO. EN–309
APPROVED :	(FOR DIRECTOR GENERAL)		**SHEET NO.** 171

REF.	REVISION	SIGNATURE	DATE

D:\std dwg 2015\EN-309(REV00)

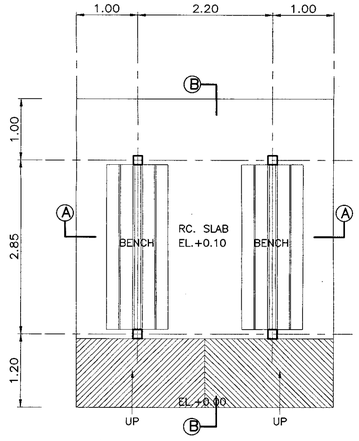

PLAN
SCALE 1 : 50

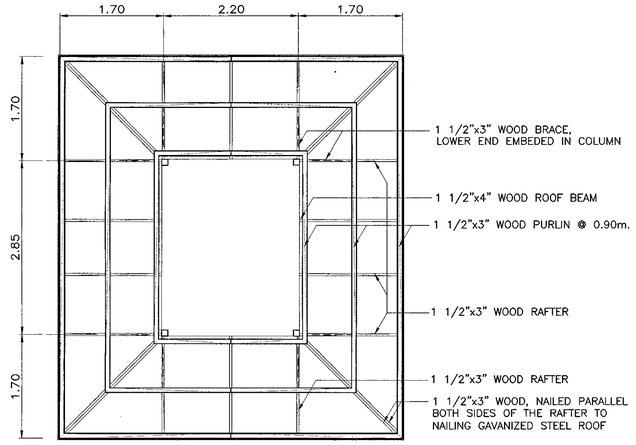

ROOF FRAMING PLAN
SCALE 1 : 50

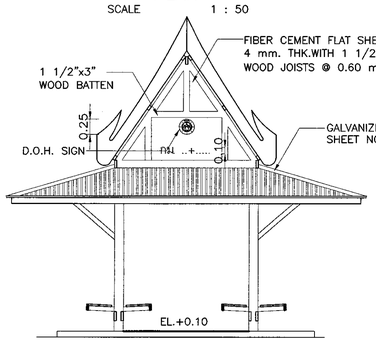

FRONT ELEVATION
SCALE 1 : 50

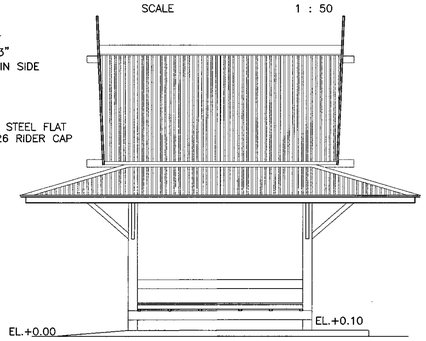

SIDE ELEVATION
SCALE 1 : 50

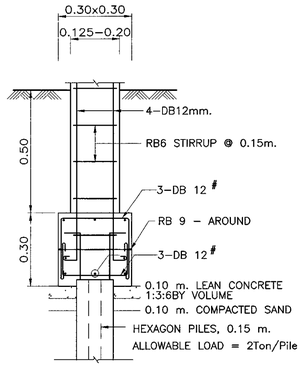

PILE FOOTING DETAILS
SCALE 1 : 12.5

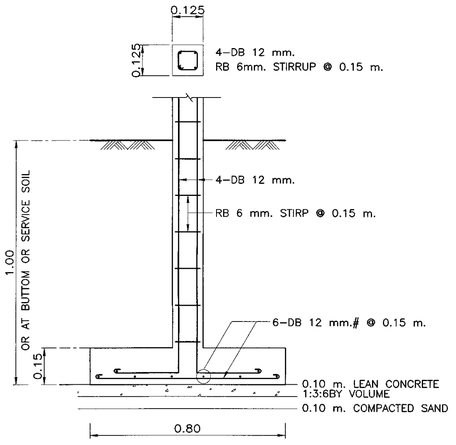

0.125x0.125 M. R.C.COLUMN

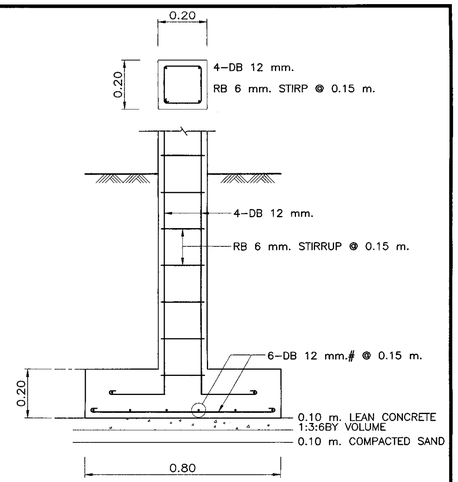

0.20x0.20 M. R.C.COLUMN

SPRED FOOTING DETAILS
SCALE 1 : 12.5

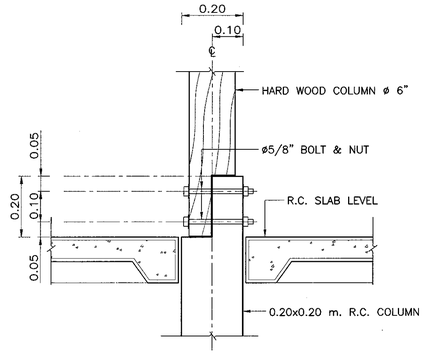

HARD WOOD COLUMN AND R.C. COLUMN CONNECTION DETAILS
SCALE 1 : 10

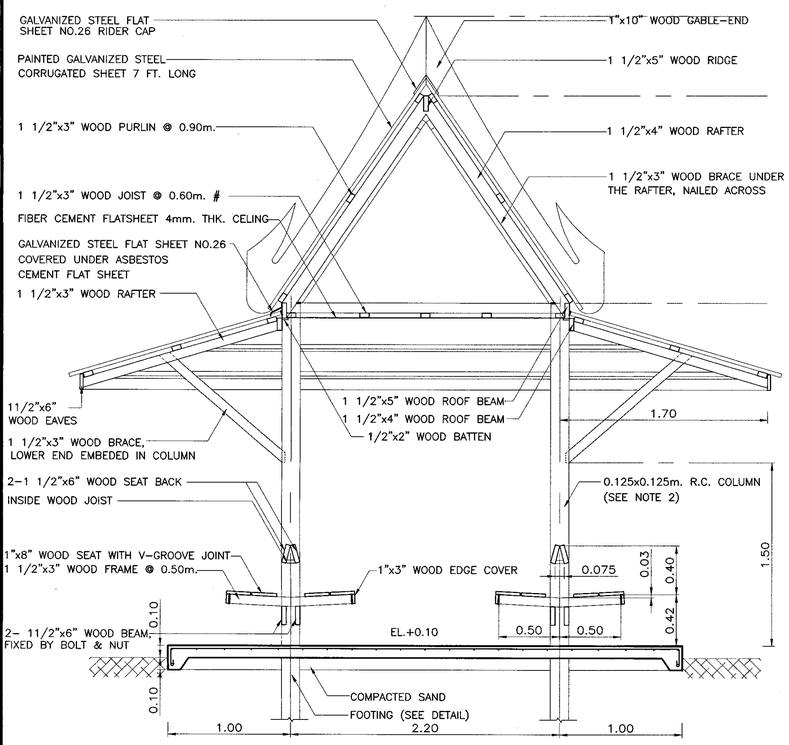

SECTION Ⓐ – Ⓐ
SCALE 1 : 25

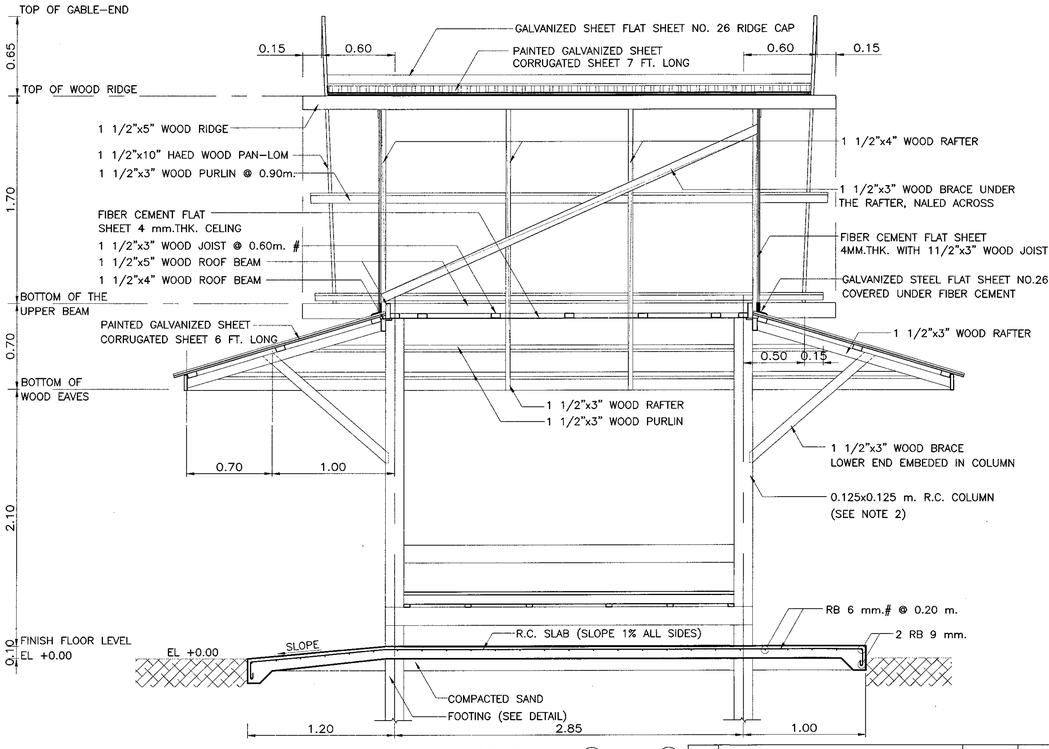

SECTION Ⓑ – Ⓑ
SCALE 1 : 25

NOTE :

1. ALL DIMENSIONS ARE IN METERS UNLESS OTHERWISE INDICATED.
2. THE SPECIFIED COLUMN FOR THIS BUS STOP SHELTER ARE AS FOLLOWS
   2.1 R.C. COLUMN SHALL BE USED BY THE SIZE FOR 0.125x0.125 m. FROM FOOTING TO THE CEILING
   2.2 HARD WOOD COLUMN ø6" MUST BE NON-DECAYABLE WITHOUT EXTENSION AND SHALL BE CONNECTED TO 0.20x0.20 m. R.C.COLUMN
3. ELEVATION±0.00 AS SHOWN IN THIS DRAWING, INDICATES THE ROADWAY SHOULDER ELEVATION.
4. CONNECTION JOINTS SHALL BE ø3/8" BOLTS AND NUTS WITH WASHERS UNLESS OTHERWISE SHOWN.
5. WOOD TEXTURE MUST BE PRESERVED AGAINST DECAY AND INSECT DAMAGE BY PROPER PRESERVATIVE PAINT.
6. A PATH TO THE SHELTER FROM SHOULDER EDGE SHALL BE PROVIDED BY 2.00 M. WIDE CONCRETE SLAB AT ELEVATION OF ±0.00 METERS.
7. GALVANIZED STEEL ROOF SHALL BE PAINTED IN GREEN.
8. FIBER CEMENT BOARD SHALL CONFORM TO TIS. 1427
9. GABLE-END, FASCIA AND CEILING SHALL BE PAINTED IN WHITE COLOR.
10. CONCRETE SHALL HAVE A MINIMUM ULTIMATE COMPRESSIVE STRENGTH OF 20MPa (204 KSC.) FOR 15x15x15 CM. CUBE AT 28 DAYS. ,CEMENT SHALL CONFORM TO TIS.15 TYPE I PORTLAND CEMENT OR APPROVAL TYPE.
11. REINFORCING STEEL SHALL CONFORM TO TIS. 20 GRADE SR 24 ,FOR ROUND BARS AND TIS 24 GRADE SD40 FOR DEFORM BARS
12. SPREAD FOOTING SHALL BE USED FOR ALLOWABLE SOIL BEARING CAPACITY UNDER THE FOUNDATION NOT LESS THAN 4 TON/M.
13. IN CASE OF CONSTRUCTION BY THE DEPARTMENT OF HIGHWAYS AND NOT LOCATED IN MAIN ROUTE, LOCAL MATERIALS MAY BE USED BY REMAINING SHAPE AND STRUCTURES OF THIS BUS STOP SHELTER.

KINGDOM OF THAILAND

MINISTRY OF TRANSPORT
DEPARTMENT OF HIGHWAYS

STANDARD DRAWING

WOODEN BUS STOP SHELTER
TYPE A : SMALL TYPE ON GROUND

DESIGNED : D.O.H. & CONSULTANTS	CHECKED : BUREAU OF LOCATION & DESIGN	DATE : OCT 2015
SUBMITTED : (DIRECTOR OF LOCATION & DESIGN BUREAU)		SCALE : AS SHOWN
APPROVED : (FOR DIRECTOR GENERAL)		DWG NO. EN-310
		SHEET NO. 172

REF.	REVISION	SIGNATURE	DATE

D:\std dwg 2015\EN-310(REV00)

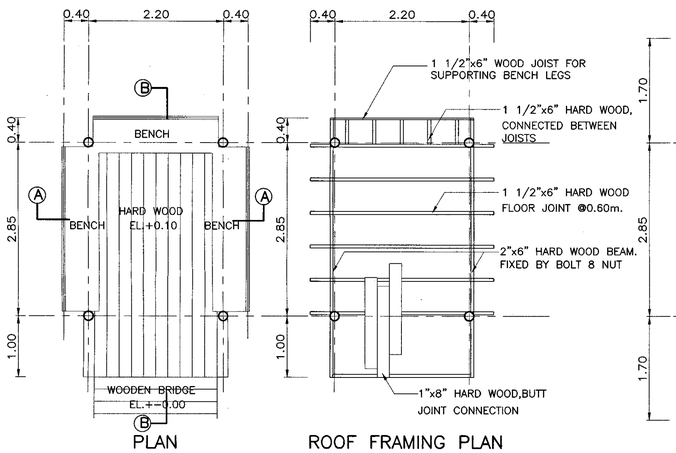

PLAN

SCALE 1 : 50

ROOF FRAMING PLAN

SCALE 1 : 50

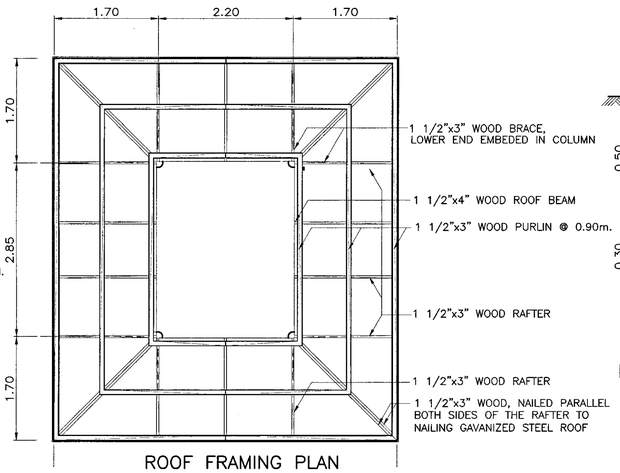

ROOF FRAMING PLAN

SCALE 1 : 50

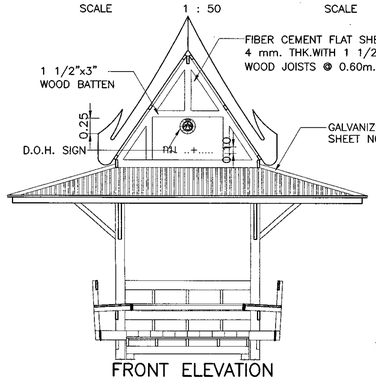

FRONT ELEVATION

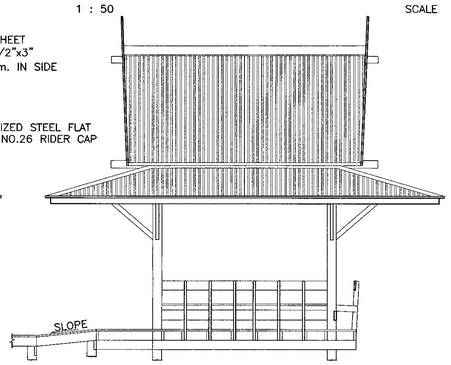

SIDE ELEVATION

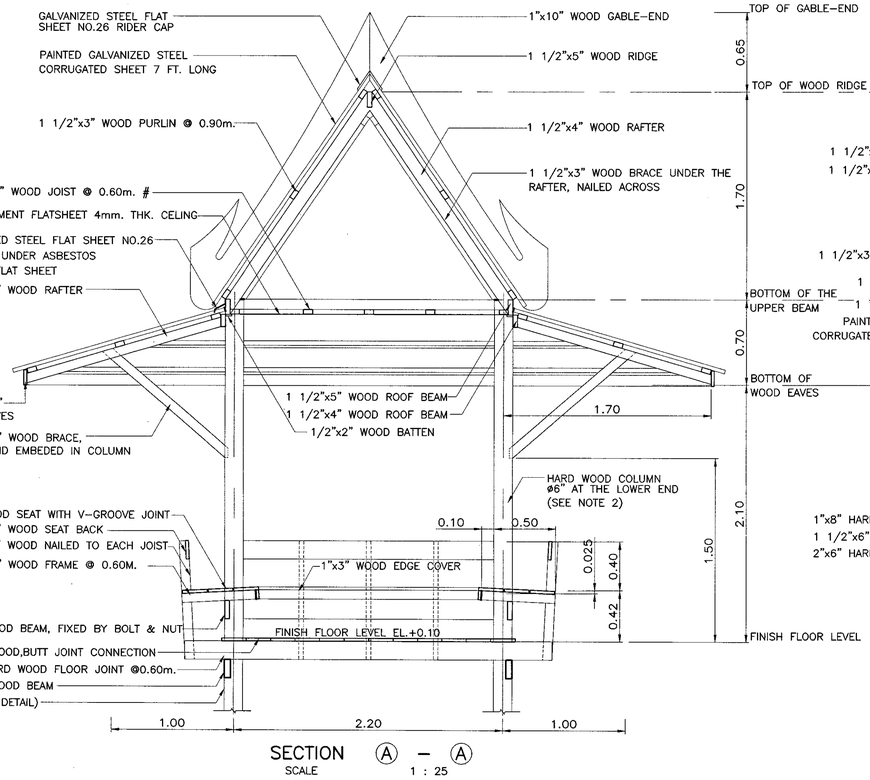

SECTION Ⓐ – Ⓐ

SCALE 1 : 25

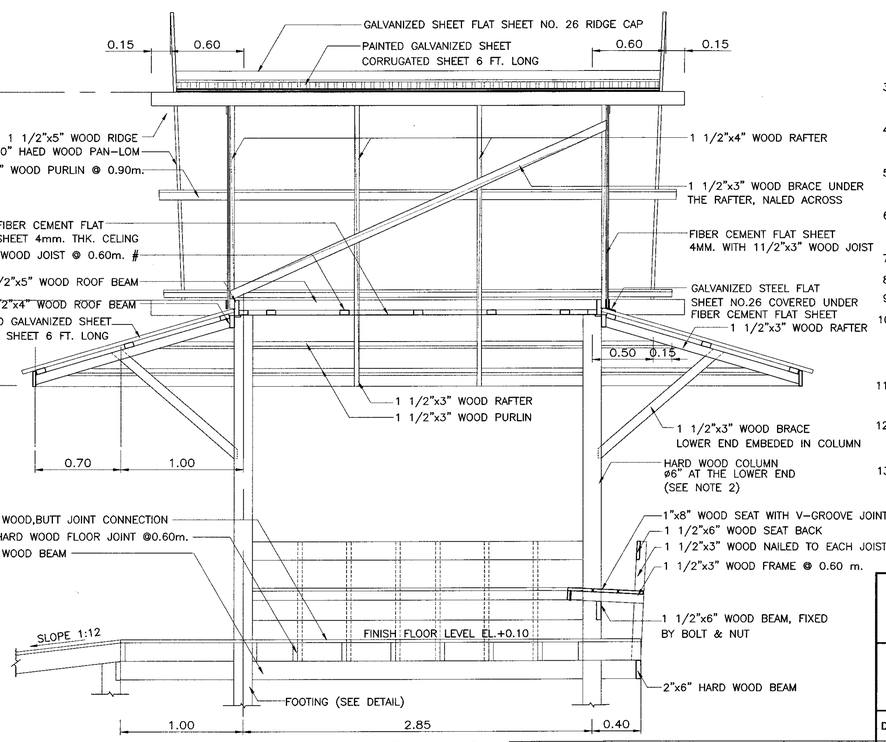

SECTION Ⓑ – Ⓑ

SCALE 1 : 25

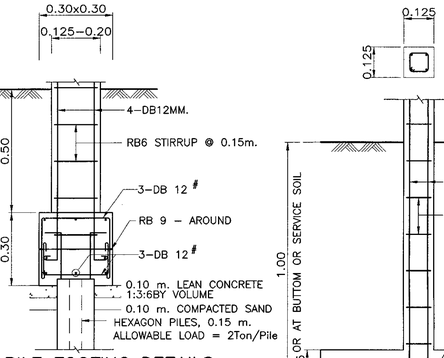

PILE FOOTING DETAILS

SCALE 1 : 12.5

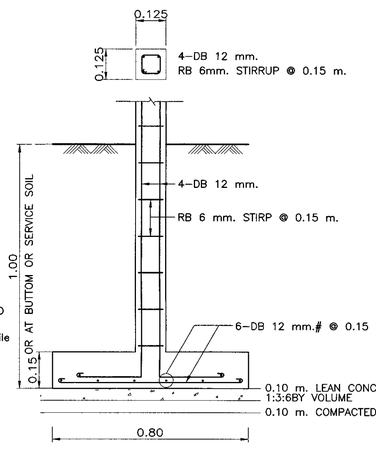

0.125x0.125 M. R.C.COLUMN

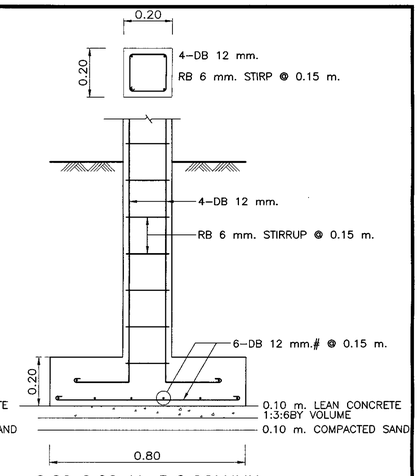

0.20x0.20 M. R.C.COLUMN

SPREAD FOOTING DETAILS

SCALE 1 : 12.5

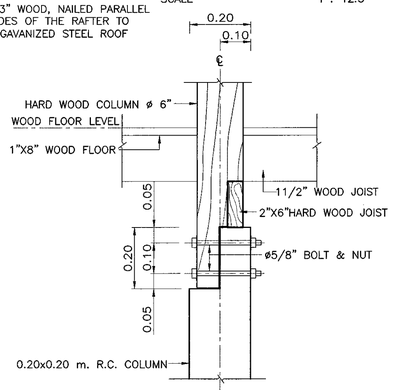

HARD WOOD COLUMN AND R.C. COLUMN CONNECTION DETAILS

SCALE 1 : 10

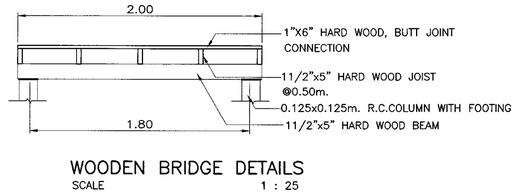

WOODEN BRIDGE DETAILS

SCALE 1 : 25

NOTE :

1. ALL DIMENSIONS ARE IN METERS UNLESS OTHERWISE INDICATED.
2. THE SPECIFIED COLUMN FOR THIS BUS STOP SHELTER ARE AS FOLLOWS
   - 2.1 R.C. COLUMN SHALL BE USED BY THE SIZE FOR 0.125x0.125 m. FROM FOOTING TO THE CEILING
   - 2.2 HARD WOOD COLUMN ø6" MUST BE NON-DECAYABLE WITHOUT EXTENSION AND SHALL BE CONNECTED TO 0.20x0.20 m. R.C.COLUMN
3. ELEVATION±0.00 AS SHOWN IN THIS DRAWING, INDICATES THE ROADWAY SHOULDER ELEVATION.
4. CONNECTION JOINTS SHALL BE ø3/8" BOLTS AND NUTS WITH WASHERS UNLESS OTHERWISE SHOWN.
5. WOOD TEXTURE MUST BE PRESERVED AGAINST DECAY AND INSECT DAMAGE BY PROPER PRESERVATIVE PAINT.
6. A PATH TO THE SHELTER FROM SHOULDER EDGE SHALL BE PROVIDED BY 2.00 M. WIDE WOODEN BRIDGE AT ELEVATION OF ±0.00 METERS.
7. GALVANIZED STEEL ROOF SHALL BE PAINTED IN GREEN.
8. FIBER CEMENT BOARD SHALL CONFORM TO TIS. 1427
9. GABLE-END, FASCIA AND CEILING SHALL BE PAINTED IN WHITE COLOR.
10. CONCRETE SHALL HAVE A MINIMUM ULTIMATE COMPRESSIVE STRENGTH OF 20MPa (204 KSC.) FOR 15x15x15 CM. CUBE AT 28 DAYS. ,CEMENT SHALL CONFORM TO TIS.15 TYPE I PORTLAND CEMENT OR APPROVAL TYPE.
11. REINFORCING STEEL SHALL CONFORM TO TIS. 20 GRADE SR 24 ,FOR ROUND BARS AND TIS 24 GRADE SD40 FOR DEFORM BARS
12. SPREAD FOOTING SHALL BE USED FOR ALLOWABLE SOIL BEARING CAPACITY UNDER THE FOUNDATION NOT LESS THAN 4 TON/M.^{2}
13. IN CASE OF CONSTRUCTION BY THE DEPARTMENT OF HIGHWAYS AND NOT LOCATED IN MAIN ROUTE, LOCAL MATERIALS MAY BE USED BY REMAINING SHAPE AND STRUCTURES OF THIS BUS STOP SHELTER.

KINGDOM OF THAILAND

MINISTRY OF TRANSPORT

DEPARTMENT OF HIGHWAYS

STANDARD DRAWING

WOODEN BUS STOP SHELTER

TYPE B : SMALL TYPE ON BEAM

DESIGNED : D.O.H. & CONSULTANTS	**CHECKED :** BUREAU OF LOCATION & DESIGN	**DATE :** OCT 2015
SUBMITTED :	(DIRECTOR OF LOCATION & DESIGN BUREAU)	**SCALE :** AS SHOWN
APPROVED :	(FOR DIRECTOR GENERAL)	**DWG NO.** EN-311
		SHEET NO. 173

REF.	REVISION	SIGNATURE	DATE

D:\std dwg 2015\EN-311(REV00)

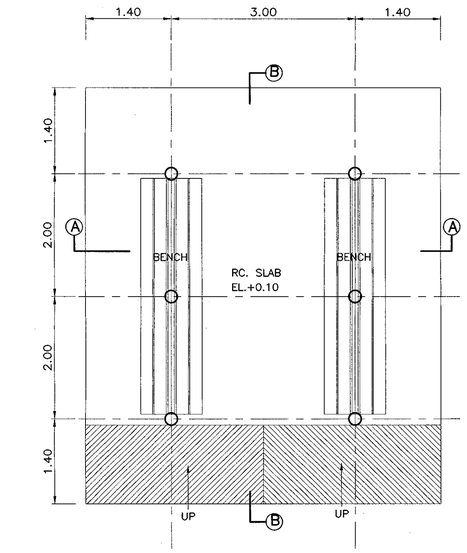

PLAN

SCALE 1 : 50

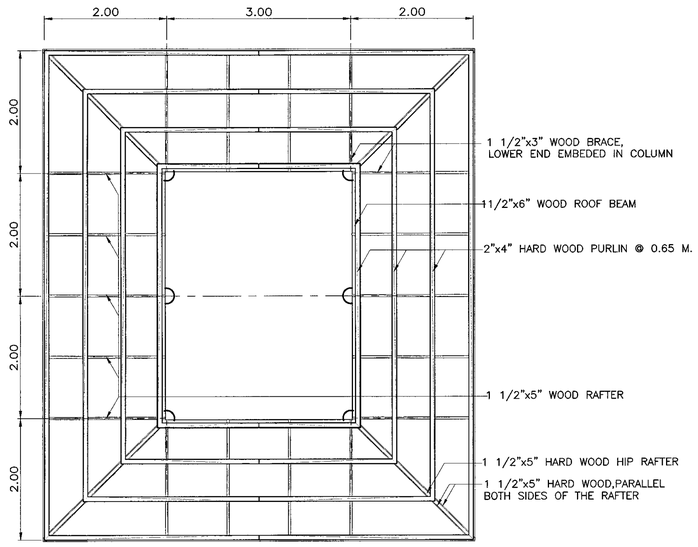

ROOF FRAMING PLAN

SCALE 1 : 50

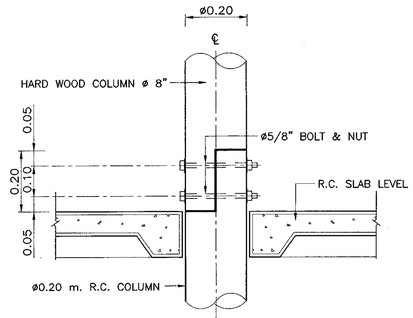

HARD WOOD COLUMN AND R.C. COLUMN CONNECTION DETAILS

SCALE 1 : 10

NOTE :

1. ALL DIMENSIONS ARE IN METERS UNLESS OTHERWISE INDICATED.
2. THE SPECIFIED COLUMN FOR THIS BUS STOP SHELTER ARE AS FOLLOWS
   - 2.1 R.C. COLUMN SHALL BE USED BY THE SIZE FOR ø0.20 m. FROM FOOTING TO THE CEILING
   - 2.2 HARD WOOD COLUMN ø8" MUST BE NON-DECAYABLE WITHOUT EXTENSION AND SHALL BE CONNECTED TO ø0.20 m. R.C.COLUMN
3. ELEVATION±0.00 AS SHOWN IN THIS DRAWING, INDICATES THE ROADWAY SHOULDER ELEVATION.
4. CONNECTION JOINTS SHALL BE ø3/8" BOLTS AND NUTS WITH WASHERS UNLESS OTHERWISE SHOWN.
5. WOOD TEXTURE MUST BE PRESERVED AGAINST DECAY AND INSECT DAMAGE BY PROPER PRESERVATIVE PAINT.
6. A PATH TO THE SHELTER FROM SHOULDER EDGE SHALL BE PROVIDED BY 2.00 M. WIDE CONCRETE SLAB AT ELEVATION OF ±0.00 METERS.
7. FIBER CEMENT ROOF SHALL BE PAINTED IN GREEN.
8. FIBER CEMENT BOARD SHALL CONFORM TO TIS. 1427
9. GABLE-END, FASCIA AND CEILING SHALL BE PAINTED IN WHITE COLOR.
10. CONCRETE SHALL HAVE A MINIMUM ULTIMATE COMPRESSIVE STRENGTH OF 20MPa (204 KSC.) FOR 15x15x15 CM. CUBE AT 28 DAYS. ,CEMENT SHALL CONFORM TO TIS.15 TYPE I PORTLAND CEMENT OR APPROVAL TYPE.
11. REINFORCING STEEL SHALL CONFORM TO TIS. 20 GRADE SR 24 ,FOR ROUND BARS AND TIS 24 GRADE SD40 FOR DEFORM BARS
12. SPREAD FOOTING SHALL BE USED FOR ALLOWABLE SOIL BEARING CAPACITY UNDER THE FOUNDATION NOT LESS THAN 4 TON/M.^{2}
13. IN CASE OF CONSTRUCTION BY THE DEPARTMENT OF HIGHWAYS AND NOT LOCATED IN MAIN ROUTE, LOCAL MATERIALS MAY BE USED BY REMAINING SHAPE AND STRUCTURES OF THIS BUS STOP SHELTER.

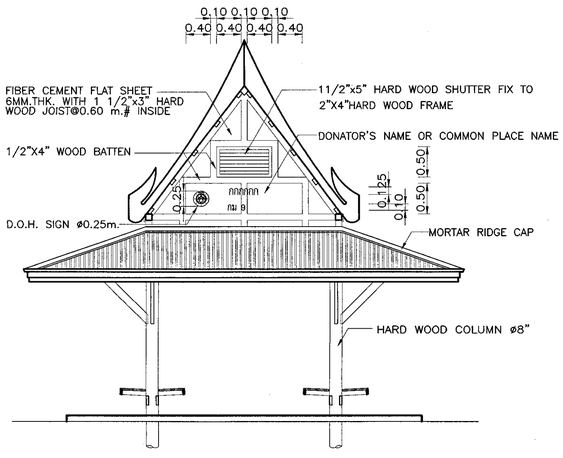

FRONT ELEVATION

SCALE 1 : 50

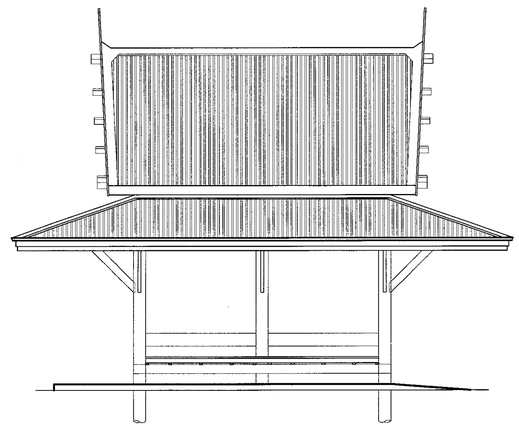

SIDE ELEVATION

SCALE 1 : 50

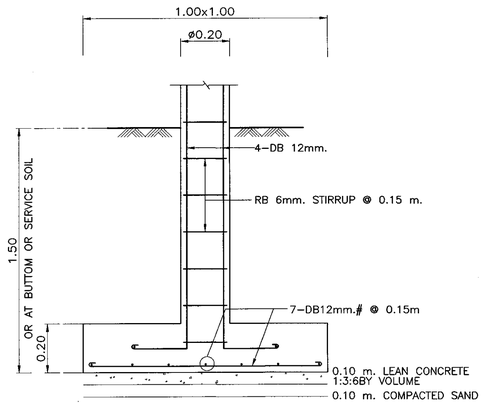

SPREAD FOOTING DETAILS

SCALE 1 : 12.5

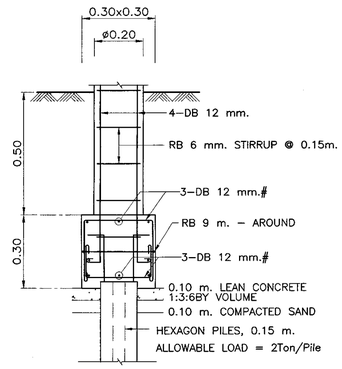

PILE FOOTING DETAILS

SCALE 1 : 12.5

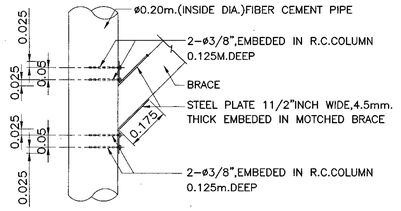

DETAIL OF BRACE CONNECTION WITH R.C.COLUMN

SCALE 1 : 12.5

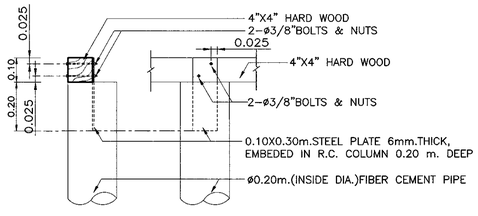

DETAIL 4"X4"HARD WOOD CONNECTION AT TOP OF R.C.COLUMN

SCALE 1 : 12.5

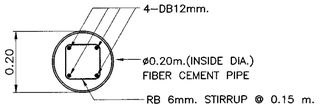

R.C. COLUMN DETAILS

SCALE 1 : 10

KINGDOM OF THAILAND

MINISTRY OF TRANSPORT

DEPARTMENT OF HIGHWAYS

STANDARD DRAWING

WOODEN BUS STOP SHELTER

TYPE C : LARGE TYPE ON GROUND - I

DESIGNED : D.O.H. & CONSULTANTS	CHECKED : BUREAU OF LOCATION & DESIGN		DATE : OCT 2015
SUBMITTED :	(DIRECTOR OF LOCATION & DESIGN BUREAU)		SCALE : AS SHOWN
APPROVED :	(FOR DIRECTOR GENERAL)		DWG NO. EN-312
			SHEET NO. 174

REF.	REVISION	SIGNATURE	DATE

D:\std dwg 2015\EN-312(REV00)

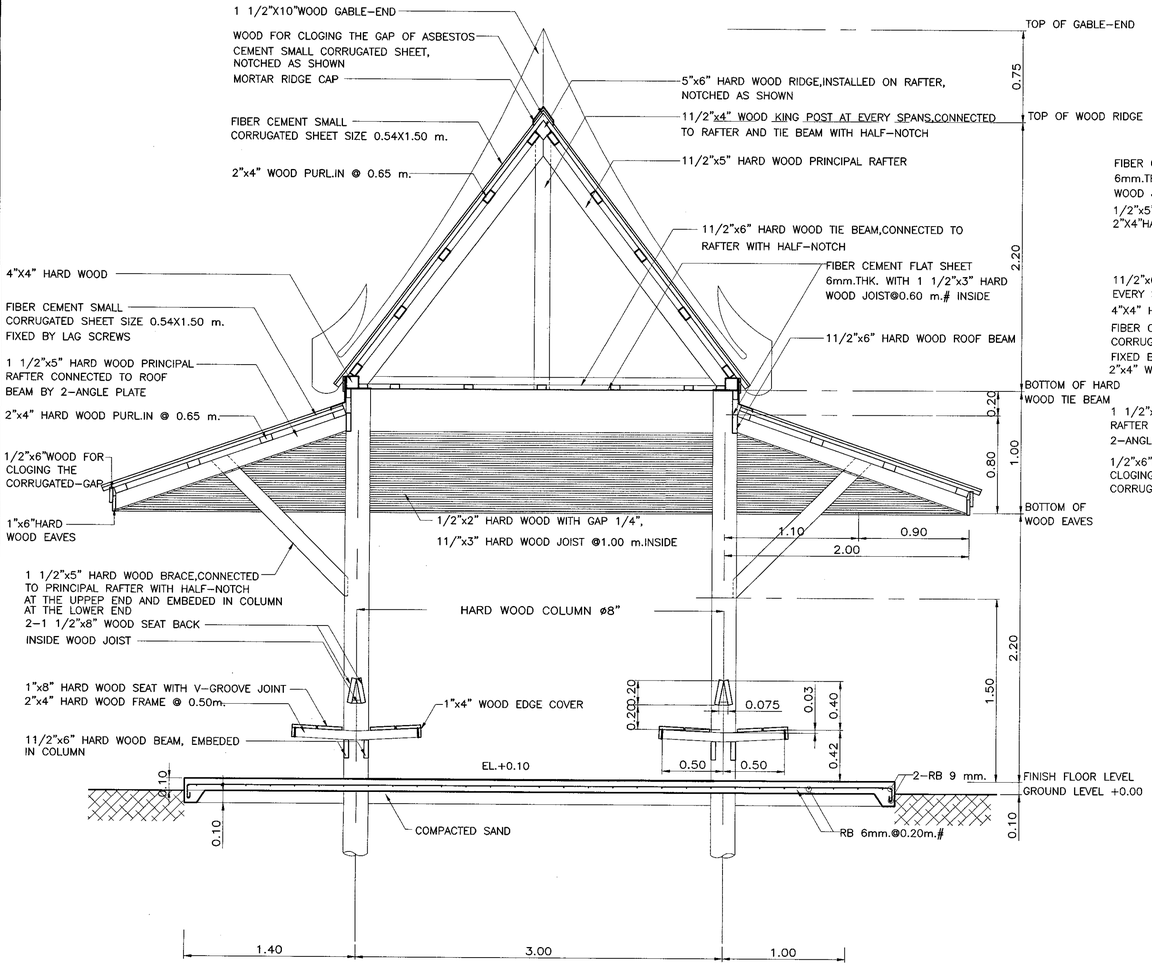

SECTION Ⓐ – Ⓐ
SCALE 1 : 25

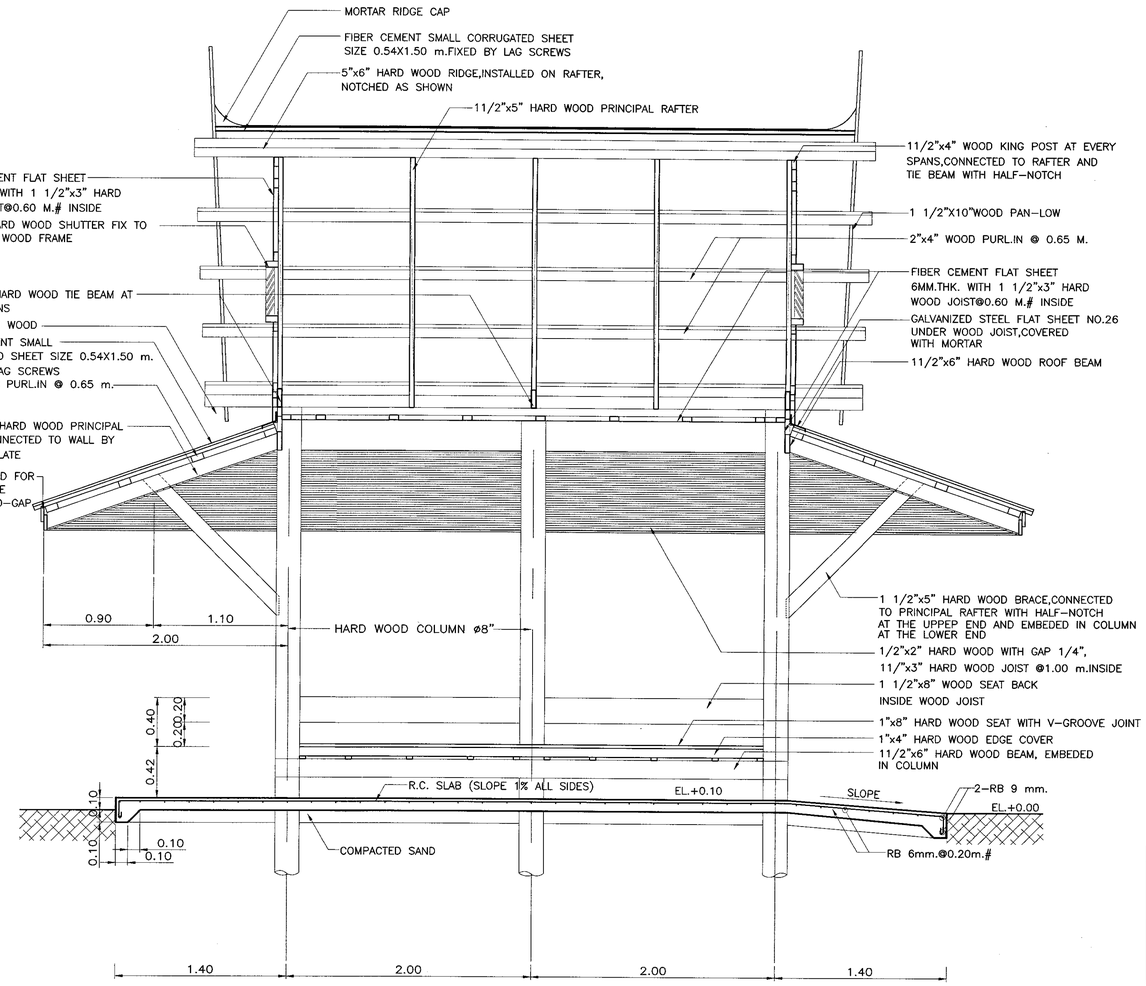

SECTION Ⓑ – Ⓑ
SCALE 1 : 25

NOTE :

1. ALL DIMENSIONS ARE IN METERS UNLESS OTHERWISE INDICATED.
2. THIS DRAWING SHALL BE USED IN COMBINATION WITH DWG.NO.EN-312.

REF.	REVISION	SIGNATURE	DATE

KINGDOM OF THAILAND

MINISTRY OF TRANSPORT
DEPARTMENT OF HIGHWAYS

STANDARD DRAWING

WOODEN BUS STOP SHELTER

TYPE C : LARGE TYPE ON GROUND – II

DESIGNED : D.O.H. & CONSULTANTS	**CHECKED :** BUREAU OF LOCATION & DESIGN	**DATE :** OCT 2015
SUBMITTED : (DIRECTOR OF LOCATION & DESIGN BUREAU)		**SCALE :** AS SHOWN
APPROVED : (FOR DIRECTOR GENERAL)		**DWG NO.** EN-313
		SHEET NO. 175

D:\std dwg 2015\EN-313(REV00)

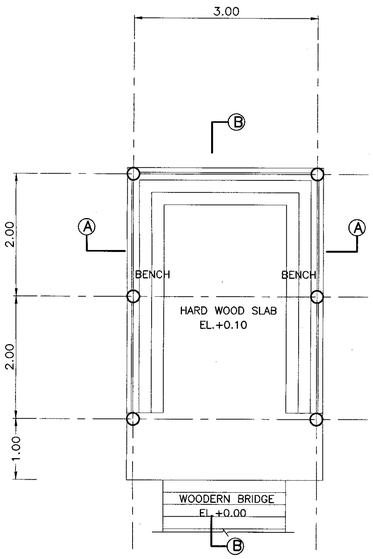

PLAN
SCALE 1 : 50

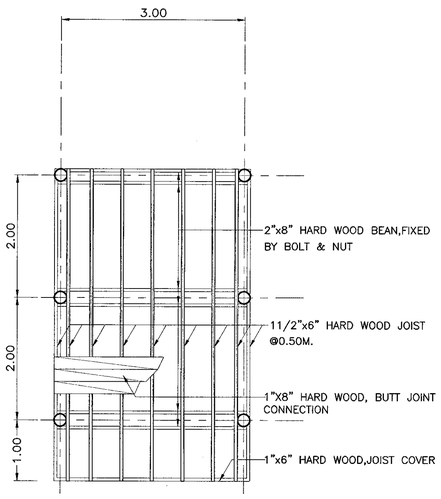

FLOOR,JOIST AND BEAM PLAN
SCALE 1 : 50

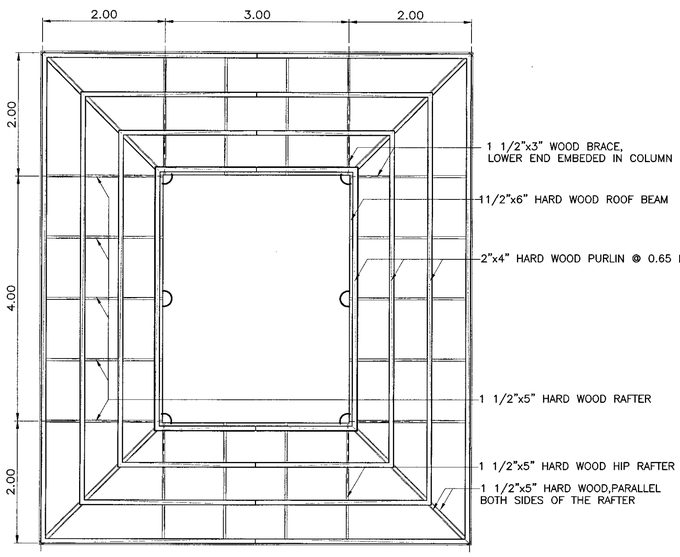

ROOF FRAMING PLAN
SCALE 1 : 50

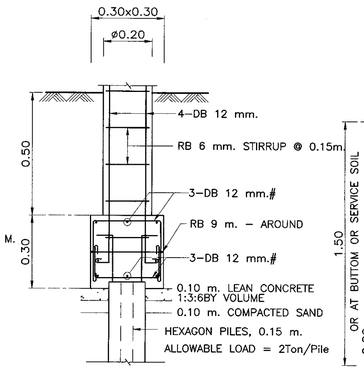

PILE FOOTING DETAILS
SCALE 1 : 12.5

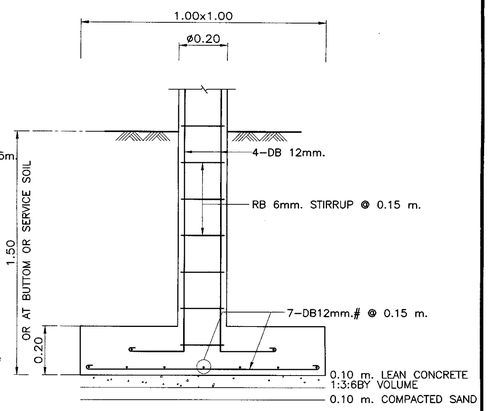

SPREAD FOOTING DETAILS
SCALE 1 : 12.5

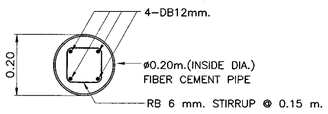

R.C. COLUMN DETAILS
SCALE 1 : 10

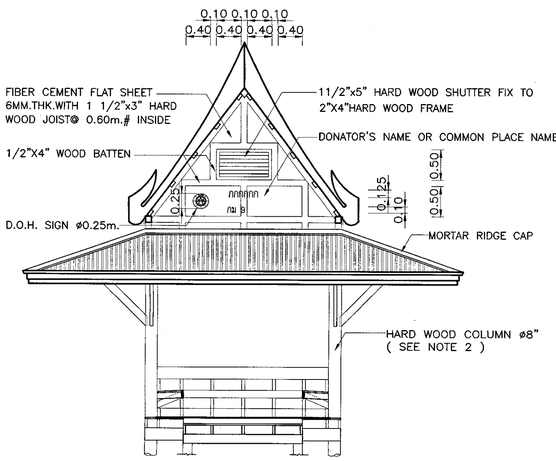

FRONT ELEVATION
SCALE 1 : 50

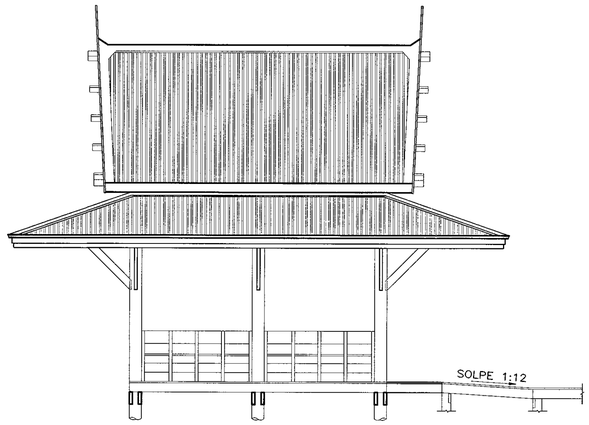

SIDE ELEVATION
SCALE 1 : 50

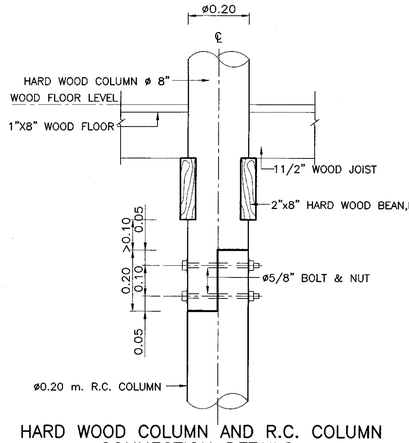

HARD WOOD COLUMN AND R.C. COLUMN CONNECTION DETAILS
SCALE 1 : 10

NOTE :

1. ALL DIMENSIONS ARE IN METERS UNLESS OTHERWISE INDICATED.
2. THE SPECIFIED COLUMN FOR THIS BUS STOP SHELTER ARE AS FOLLOWS
   - 2.1 R.C. COLUMN SHALL BE USED BY THE SIZE FOR ø0.20 m. FROM FOOTING TO THE CEILING
   - 2.2 HARD WOOD COLUMN ø8" MUST BE NON–DECAYABLE WITHOUT EXTENSION AND SHALL BE CONNECTED TO ø0.20 m. R.C.COLUMN
3. ELEVATION±0.00 AS SHOWN IN THIS DRAWING, INDICATES THE ROADWAY SHOULDER ELEVATION.
4. CONNECTION JOINTS SHALL BE ø3/8" BOLTS AND NUTS WITH WASHERS UNLESS OTHERWISE SHOWN.
5. WOOD TEXTURE MUST BE PRESERVED AGAINST DECAY AND INSECT DAMAGE BY PROPER PRESERVATIVE PAINT.
6. A PATH TO THE SHELTER FROM SHOULDER EDGE SHALL BE PROVIDED BY 2.00 M. WIDE CONCRETE SLAB AT ELEVATION OF ±0.00 METERS.
7. FIBER CEMENT ROOF SHALL BE PAINTED IN GREEN.
8. FIBER CEMENT BOARD SHALL CONFORM TO TIS. 1427
9. GABLE–END, FASCIA AND CEILING SHALL BE PAINTED IN WHITE COLOR.
10. CONCRETE SHALL HAVE A MINIMUM ULTIMATE COMPRESSIVE STRENGTH OF 20MPa (204 KSC.) FOR 15x15x15 CM. CUBE AT 28 DAYS. ,CEMENT SHALL CONFORM TO TIS.15 TYPE I PORTLAND CEMENT OR APPROVAL TYPE.
11. REINFORCING STEEL SHALL CONFORM TO TIS. 20 GRADE SR 24 ,FOR ROUND BARS AND TIS 24 GRADE SD40 FOR DEFORM BARS
12. SPREAD FOOTING SHALL BE USED FOR ALLOWABLE SOIL BEARING CAPACITY UNDER THE FOUNDATION NOT LESS THAN 4 TON/M.^{2}
13. IN CASE OF CONSTRUCTION BY THE DEPARTMENT OF HIGHWAYS AND NOT LOCATED IN MAIN ROUTE, LOCAL MATERIALS MAY BE USED BY REMAINING SHAPE AND STRUCTURES OF THIS BUS STOP SHELTER.

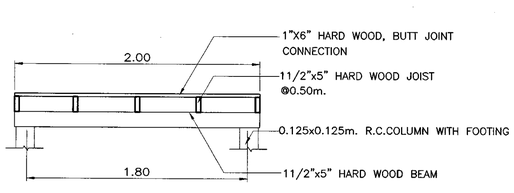

WOODEN BRIDGE DETAILS
SCALE 1 : 25

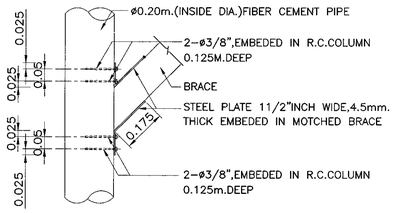

DETAIL OF BRACE CONNECTION WITH R.C.COLUMN
SCALE 1 : 12.5

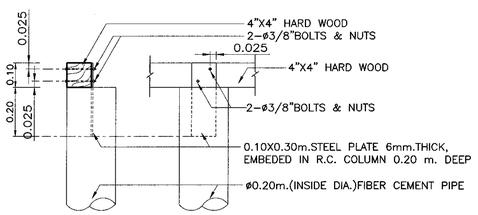

DETAIL 4"X4"HARD WOOD CONNECTION AT TOP OF R.C.COLUMN
SCALE 1 : 12.5

REF.	REVISION	SIGNATURE	DATE

KINGDOM OF THAILAND

MINISTRY OF TRANSPORT
DEPARTMENT OF HIGHWAYS

STANDARD DRAWING
WOODEN BUS STOP SHELTER
TYPE D : LARGE TYPE ON BEAM – I

DESIGNED : D.O.H. & CONSULTANTS	CHECKED : BUREAU OF LOCATION & DESIGN	DATE : OCT 2015
SUBMITTED : (DIRECTOR OF LOCATION & DESIGN BUREAU)		SCALE : AS SHOWN
APPROVED : (FOR DIRECTOR GENERAL)		DWG NO. EN–314
		SHEET NO. 176

D:\std dwg 2015\EN-314(REV00)

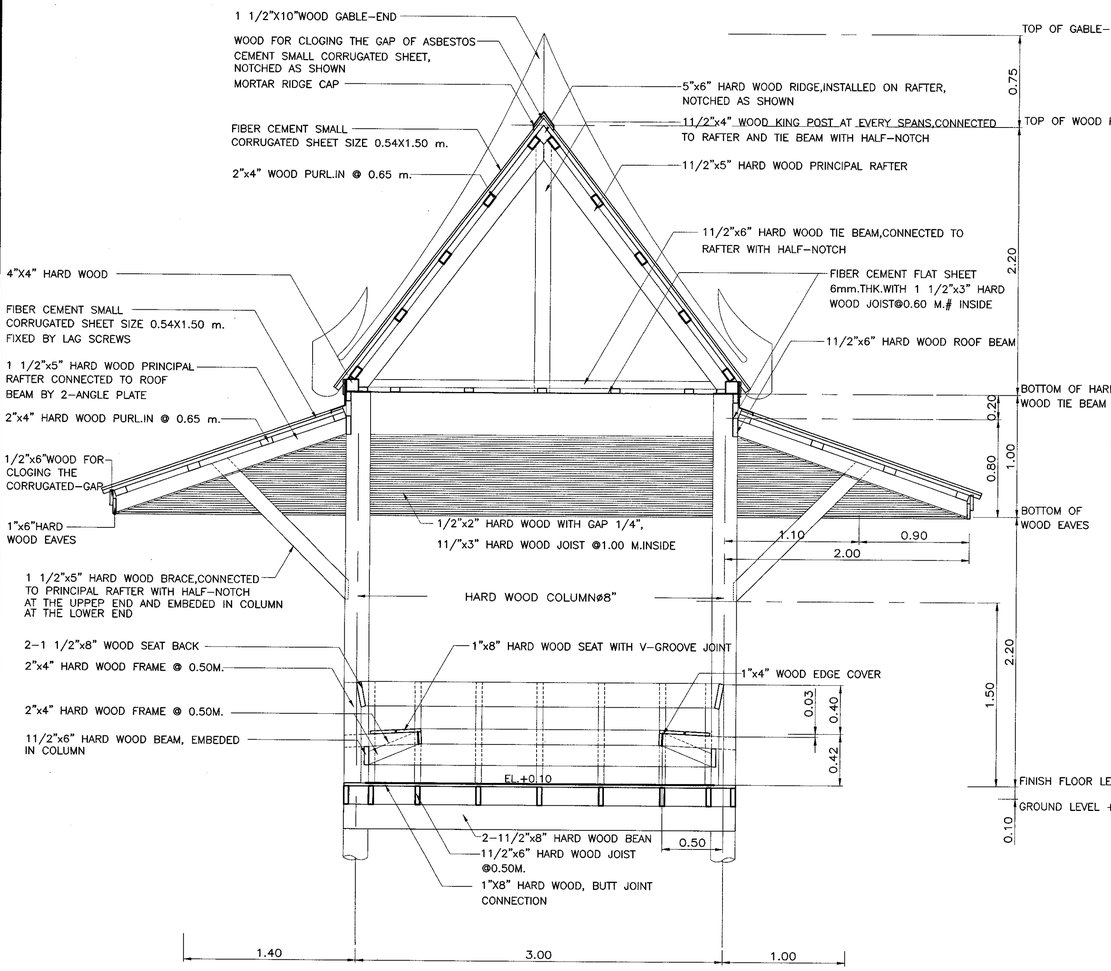

SECTION Ⓐ – Ⓐ
SCALE 1 : 25

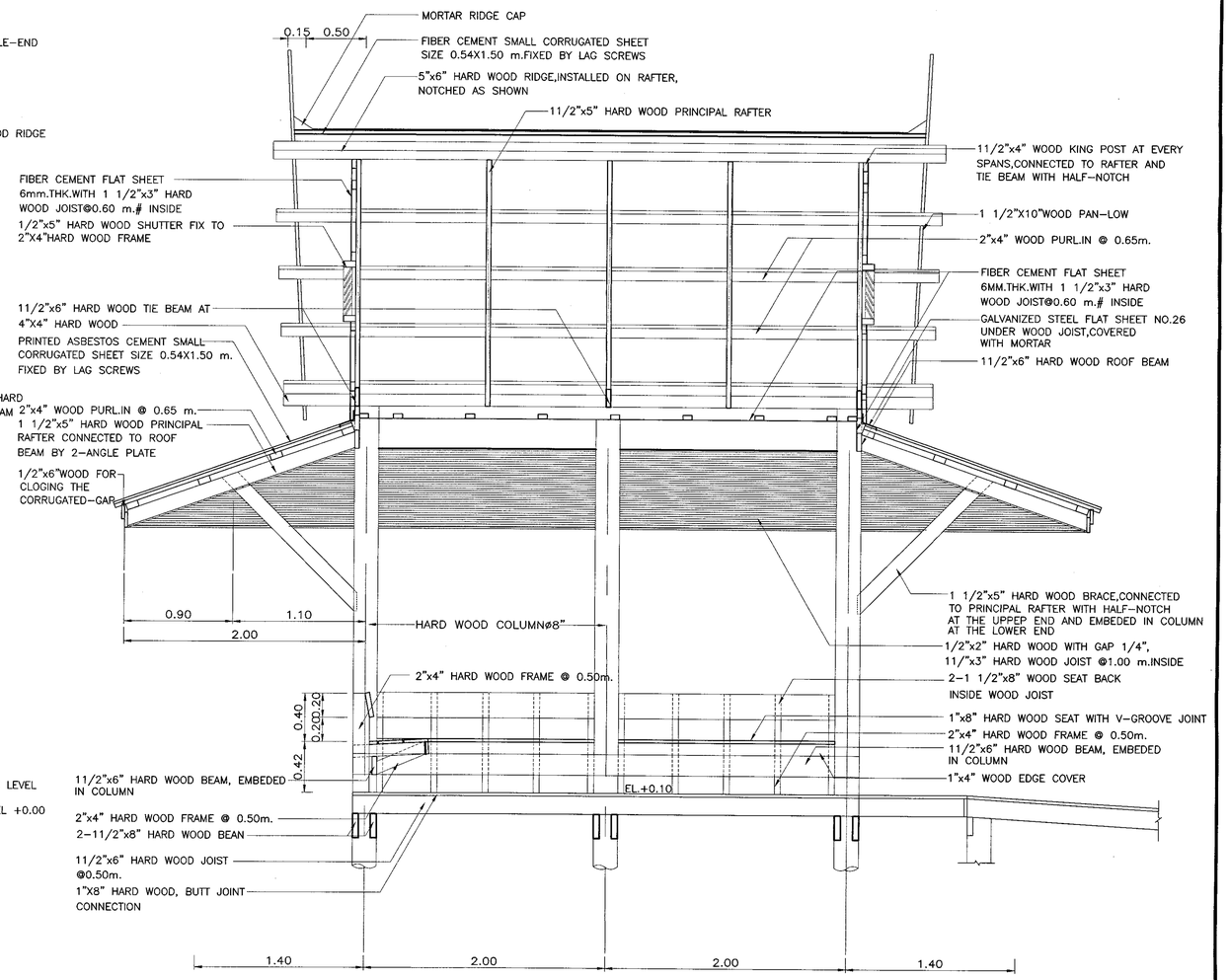

SECTION Ⓑ – Ⓑ
SCALE 1 : 25

NOTE :

1. ALL DIMENSIONS ARE IN METERS UNLESS OTHERWISE INDICATED.
2. THIS DRAWING SHALL BE USED IN COMBINATION WITH DWG.NO.EN-314.

REF.	REVISION	SIGNATURE	DATE

KINGDOM OF THAILAND

MINISTRY OF TRANSPORT
DEPARTMENT OF HIGHWAYS

STANDARD DRAWING
WOODEN BUS STOP SHELTER
TYPE D : LARGE TYPE ON BEAM – II

DESIGNED : D.O.H. & CONSULTANTS	CHECKED : BUREAU OF LOCATION & DESIGN	DATE : OCT 2015
SUBMITTED : (DIRECTOR OF LOCATION & DESIGN BUREAU)		SCALE : AS SHOWN
APPROVED : (FOR DIRECTOR GENERAL)		DWG NO. EN-315
		SHEET NO. 177

D:\std dwg 2015\EN-315(REV00)

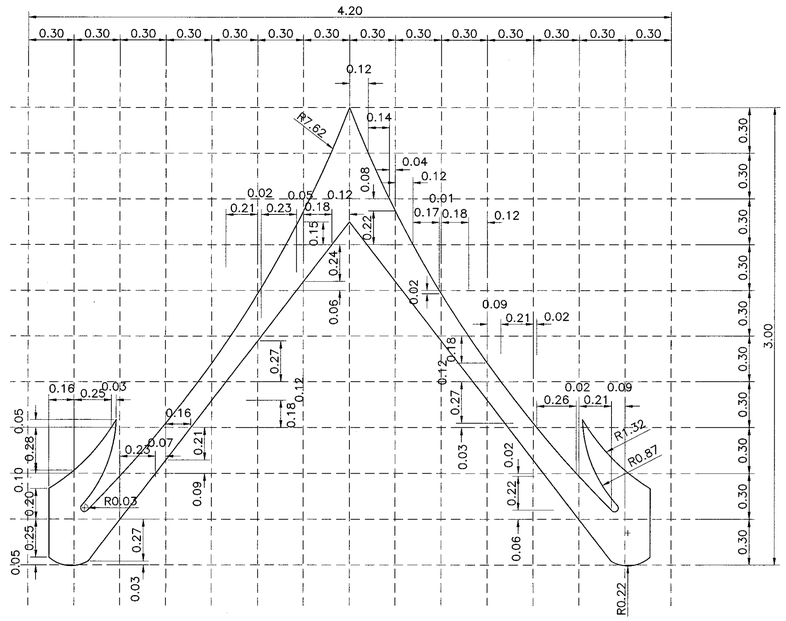

LARGE DECORATIVE GABLE DETAILS FOR TYPE C AND D

SCALE 1 : 20

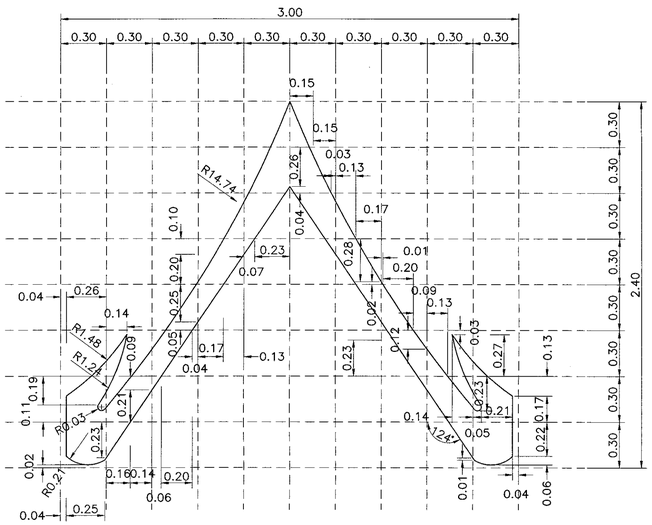

SMALL DECORATIVE GABLE DETAILS FOR TYPE A AND B

SCALE 1 : 20

DECORATIVE EXTENSION OF THE APEX OF THE GABLE

NOTE :

1. DIMENSIONS ARE IN METERS UNLESS OTHERWISE INDICATED.

REF.	REVISION	SIGNATURE	DATE

KINGDOM OF THAILAND

MINISTRY OF TRANSPORT

DEPARTMENT OF HIGHWAYS

STANDARD DRAWING

BUS STOP SHELTER

DECORATIVE EXTENSION OF THE APEX OF THE GABLE

DESIGNED : D.O.H. & CONSULTANTS	**CHECKED :** BUREAU OF LOCATION & DESIGN	**DATE :** OCT 2015
SUBMITTED : (DIRECTOR OF LOCATION & DESIGN BUREAU)		**SCALE :** AS SHOWN
		DWG NO. MD-316
APPROVED : (FOR DIRECTOR GENERAL)		**SHEET NO.** 178

D:\std dwg 2015\EN-316(REV00)

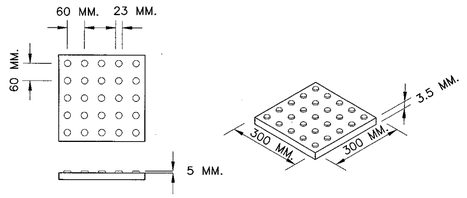

DETECTABLE WARNING DEVICE
NOT TO SCALE

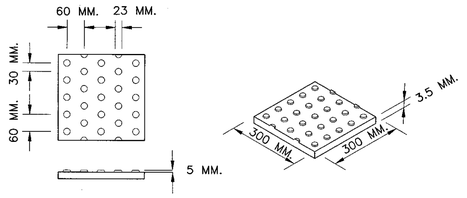

DETECTABLE POSITIONAL DEVICE
NOT TO SCALE

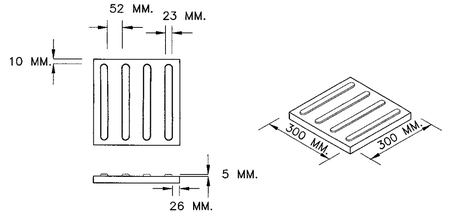

DETECTABLE STRIP WARNING DEVICE
NOT TO SCALE

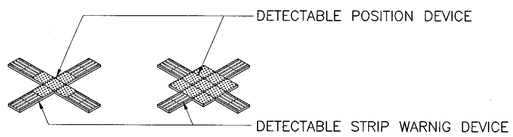

INTERSECTION PAVEMENT

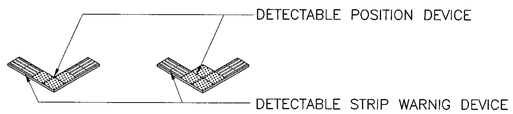

CORNER PAVEMENT

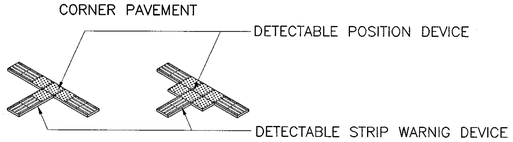

JUNCTION PAVEMENT

PAVEMENT FORMS FOR VISUAL IMPAIR
NOT TO SCALE

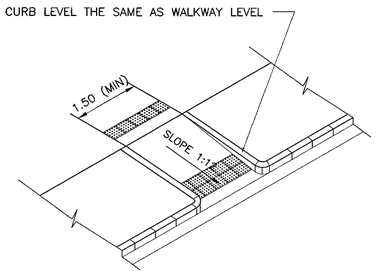

ISOMETRIC VIEW
NOT TO SCALE

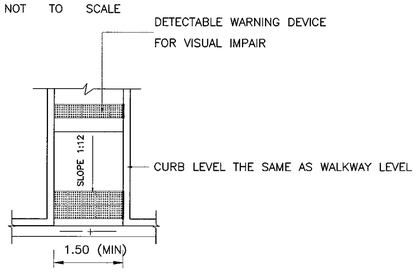

TOP VIEW
NOT TO SCALE

PERPENDICULAR CURB RAMP

DISABILITIES RAMP CROSSING THROUGH SIDEWALK
1.50 M. MINIMUM CROSSING SLOPE WIDTH PASSING THROUGH SIDEWALK
IN CASE OF WALKWAYS ARE NOT FUNCTIONAL FOR DISABILITIES

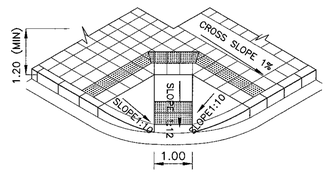

ISOMETRIC VIEW
NOT TO SCALE

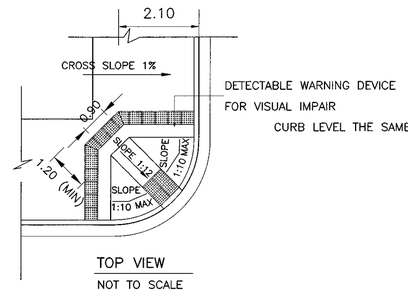

TOP VIEW
NOT TO SCALE

DIAGONAL CURB RAMP WITH CURBED SIDES AT THE CORNER

CORNER MERGING WALKWAY
DISABILITIES RAMP LOCATED AT THE CORNER
AND CONTAIN MINIMUM 2.80 M. WALKWAY WIDTH
EACH SIDE FOR THE MERGE

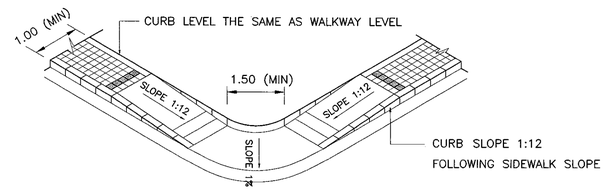

ISOMETRIC VIEW
NOT TO SCALE

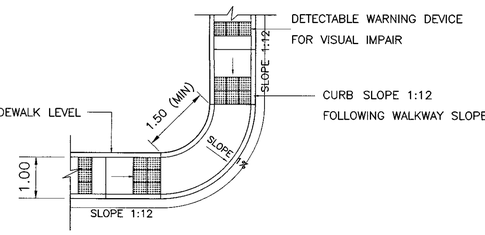

TOP VIEW
NOT TO SCALE

PARALLEL RAMP ON NARROW WALKWAY AT THE CORNER

CORNER MERGING ON NARROW WALKWAY
DISABILITIES RAMP CANNOT BE LOCATED AT THE EXACT CORNER
BY MINIMUM 1.00 M. WALKWAY WIDTH,
WHERE IS NOT REACH "DIAGONAL CURB RAMP WITH CURBED SIDES AT THE CORNER" CRITERIA

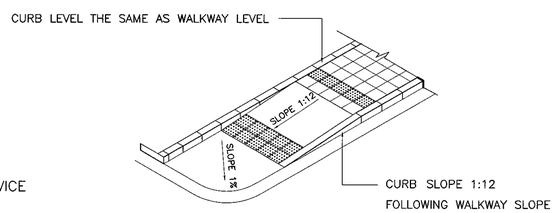

ISOMETRIC VIEW
FIGURE NOT TO SCALE

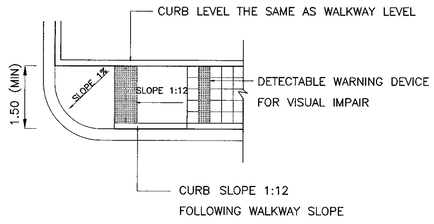

TOP VIEW
NOT TO SCALE

END OF SIDEWALK RAMP

CORNER THAT HAVE SINGLE WALKWAY (NON-MERGING WALKWAY)
1.50 M. MINIMUM WALKWAY WIDTH AT THE END OF CORNER
IN CASE OF SIDEWALKS ARE END

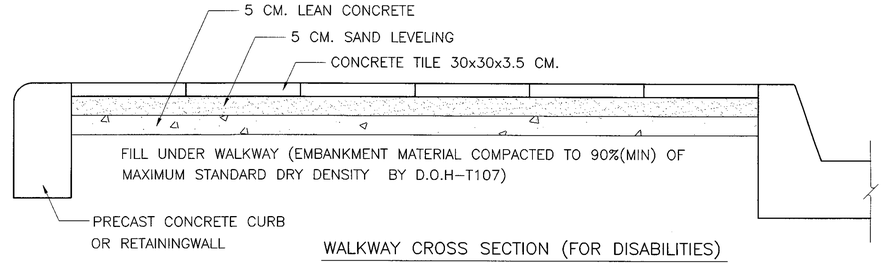

WALKWAY CROSS SECTION (FOR DISABILITIES)
NOT TO SCALE

NOTES :

1. DIMENSIONS ARE IN METERS UNLESS OTHERWISE INDICATED.
2. CONCRETE SHALL HAVE A MINIMUM ULTIMATE COMPRESSIVE STRENGTH OF 20 MPa (204 KSC) FOR 15x15x15 CM. CUBE AT 28 DAYS,
3. CEMENT SHALL CONFORM TO TIS. 15 TYPE I PORTLAND CEMENT OR APPROVAL TYPE
4. REINFORCING STEEL SHALL CONFORM TO TIS. 20 GRADE SR 24 FOR ROUND BARS AND TIS. 24 GRADE SD 40 FOR DEFORM BARS.
5. WHITE, BLACK, YELLOW AND RED PAINTS SHALL BE GLOSS ENAMEL PAINT AND CONFORM TO TIS.327
6. FILL UNDER SIDEWALK SHALL BE THE SAME MATERIAL AS EMBANKMENT AND COMPACTED TO 90% (MIN.) STANDARD PROCTOR (DOH – T107)
7. LOCATION FOR CURB MARKING SHALL BE AS SHOW ON PLAN OR DIRECTED BY THE ENGINEER.
8. PROVIDED DETECTABLE WARNING DEVICE 0.30 M AWAY FROM SLOPE (FOR ASSIST VISUAL IMPAIR)
9. WALKWAY STRUCTURE AND MATERIALS DETAIL MUST BE PROCEEDED TO DRAWING OR SPECIFY BY ENGINEER
10. PRECAST CONCRETE TILES SHALL BE CONFORM TO TIS. 378 OR TIS. 826

REF.	REVISION	SIGNATURE	DATE

KINGDOM OF THAILAND

MINISTRY OF TRANSPORT
DEPARTMENT OF HIGHWAYS

STANDARD DRAWING
HANDICAP WALKWAY
RAMP AND WALKWAY AT CORNERS

DESIGNED : D.O.H. & CONSULTANTS	CHECKED : BUREAU OF LOCATION & DESIGN	DATE : OCT 2015
SUBMITTED : (DIRECTOR OF LOCATION & DESIGN BUREAU)		SCALE : AS SHOWN
APPROVED : (FOR DIRECTOR GENERAL)		DWG NO. EN-401
		SHEET NO. 179

D:\std dwg 2015\EN-401(REV00)

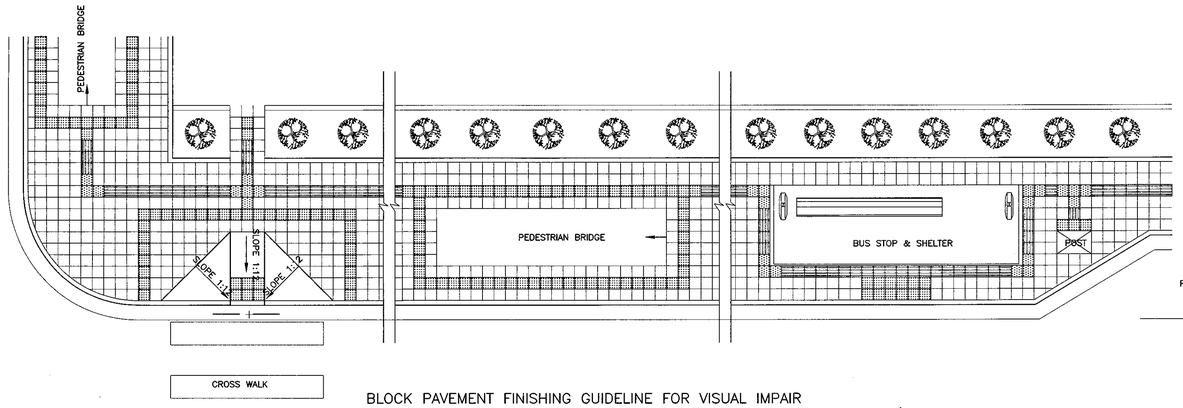

PARKING SPACE

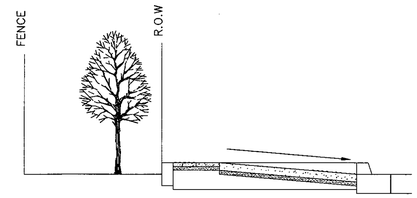

SECTION A–A
WIDER WALKWAY
NOT TO SCALE

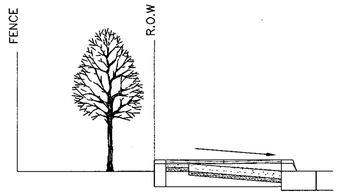

SECTION B–B
NARROW WALKWAY
NOT TO SCALE

BLOCK PAVEMENT FINISHING GUIDELINE FOR VISUAL IMPAIR

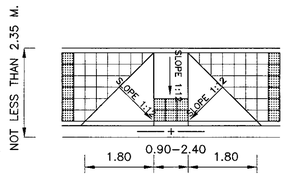

TOP VIEW
NOT TO SCALE

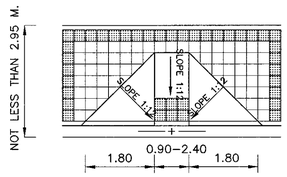

TOP VIEW
NOT TO SCALE

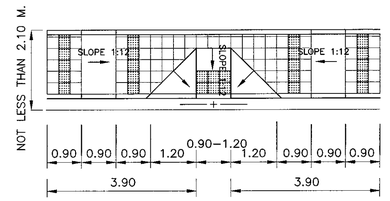

TOP VIEW
NOT TO SCALE

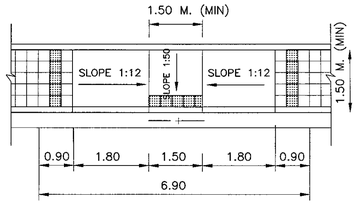

TOP VIEW
NOT TO SCALE



FRONT VIEW
NOT TO SCALE



FRONT VIEW
NOT TO SCALE



FRONT VIEW
NOT TO SCALE



FRONT VIEW
NOT TO SCALE

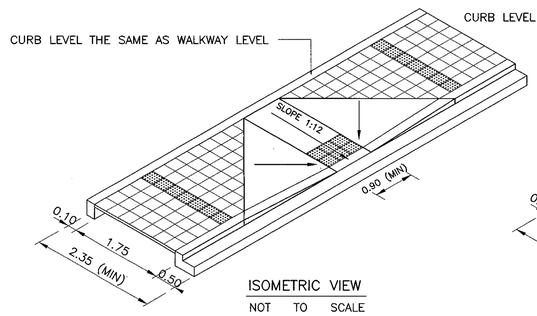

ISOMETRIC VIEW
NOT TO SCALE

CURB RAMP WITH CURBED SIDES (WIDE WALKWAY)

PERPENDICULAR CURB RAMP
LOCATED ON 2.35M. < WALKWAY WIDTH < 2.95M.

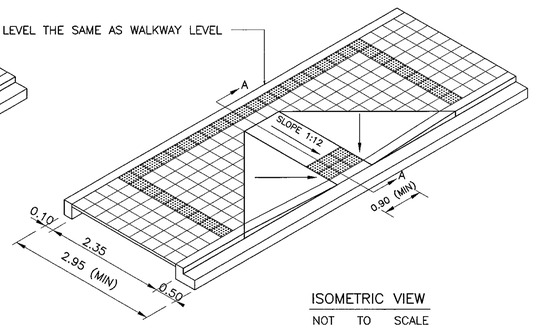

ISOMETRIC VIEW
NOT TO SCALE

CURB RAMP WITH CURBED SIDES (WIDER WALKWAY)

PERPENDICULAR CURB RAMP
LOCATED ON WALKWAY WIDTH ≥ 2.95M.

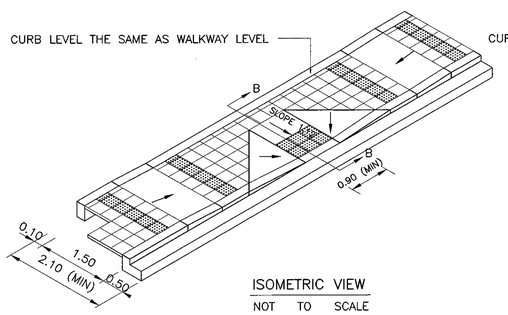

ISOMETRIC VIEW
NOT TO SCALE

CURB RAMP WITH CURBED SIDES (NARROW WALKWAY)

PERPENDICULAR/PARALLEL COMBINATION CURB RAMP
LOCATED ON 2.10M.< WALKWAY WIDTH < 2.35M.

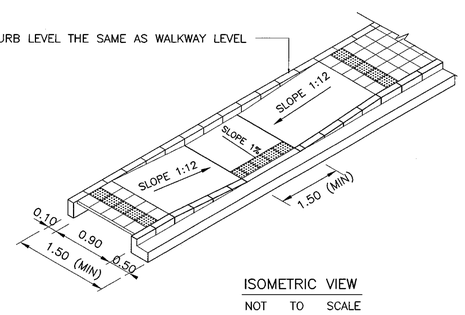

ISOMETRIC VIEW
NOT TO SCALE

CURB RAMP WITH NARROW WALKWAY

PARALLEL CURB RAMP
LOCATED ON 1.50M.< WALKWAY WIDTH < 2.10M.

DRAWING SHOWS SLOPE CUT WALKWAY FOR DISABILITIES AND ELDERLIES

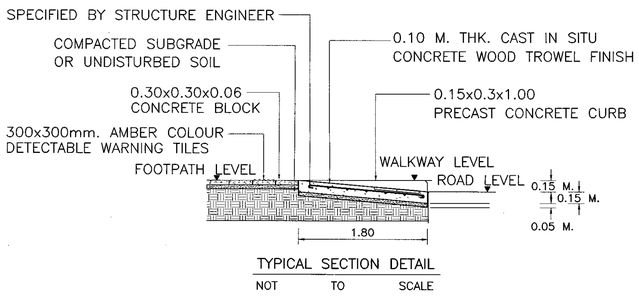

TYPICAL SECTION DETAIL
NOT TO SCALE

NOTES :

1. DIMENSIONS ARE IN METERS UNLESS OTHERWISE INDICATED.
2. CONCRETE SHALL HAVE A MINIMUM ULTIMATE COMPRESSIVE STRENGTH OF 20 MPa (204 KSC) FOR 15x15x15 CM. CUBE AT 28 DAYS,
3. CEMENT SHALL CONFORM TO TIS. 15 TYPE I PORTLAND CEMENT OR APPROVAL TYPE
4. REINFORCING STEEL SHALL CONFORM TO TIS. 20 GRADE SR 24 FOR ROUND BARS AND TIS. 24 GRADE SD 40 FOR DEFORM BARS.
5. WHITE, BLACK, YELLOW AND RED PAINTS SHALL BE GLOSS ENAMEL PAINT AND CONFORM TO TIS.327
6. FILL UNDER SIDEWALK SHALL BE THE SAME MATERIAL AS EMBANKMENT AND COMPACTED TO 90% (MIN.) STANDARD PROCTOR (DOH – T107)
7. LOCATION FOR CURB MARKING SHALL BE AS SHOW ON PLAN OR DIRECTED BY THE ENGINEER.
8. PROVIDED DETECTABLE WARNING DEVICE 0.30 M. BEFORE REACHING SLOPE (FOR ASSIST VISUAL IMPAIR)
9. WALKWAY STRUCTURE AND MATERIALS DETAIL MUST BE PROCEEDED TO DRAWING OR SPECIFY BY ENGINEER
10. PRECAST CONCRETE TILES SHALL BE CONFORM TO TIS. 378 OR TIS. 826

REF.	REVISION	SIGNATURE	DATE

KINGDOM OF THAILAND

MINISTRY OF TRANSPORT
DEPARTMENT OF HIGHWAYS

STANDARD DRAWING
HANDICAP WALKWAY
RAMP AND WALKWAY AT STRAIGHTS

DESIGNED : D.O.H. & CONSULTANTS	CHECKED : BUREAU OF LOCATION & DESIGN	DATE : OCT 2015
SUBMITTED : (DIRECTOR OF LOCATION & DESIGN BUREAU)		SCALE : AS SHOWN
APPROVED : (FOR DIRECTOR GENERAL)		DWG NO. EN–402
		SHEET NO. 180

D:\std dwg 2015\EN-402(REV00)

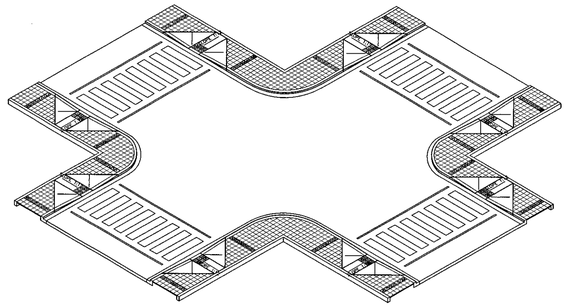

RAMP TYPE 1 ON 2.35M. ⩽ WALKWAY WIDTH < 2.95M. AT INTERSECTION

NOT TO SCALE

PERPENDICULAR CURB RAMP

PAIRED CURB RAMP LOCATED ON 2.35M. ⩽ WALKWAY WIDTH < 2.90M.

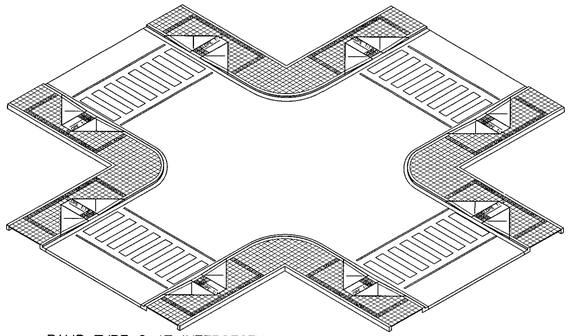

RAMP TYPE 2 AT INTERSECTION ON WALKWAY WIDTH ⩾ 2.95M.

NOT TO SCALE

PERPENDICULAR CURB RAMP

PAIRED CURB RAMP LOCATED ON WALKWAY WIDTH ⩾ 2.95M.

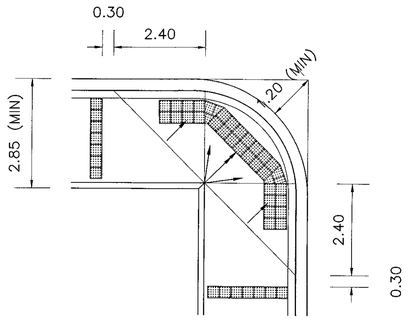

RAMP TYPE 3.1 AT CORNER AREA

NOT TO SCALE

DIAGONAL CURB RAMP

LOCATED ON ⩽ 2.85 M. WALKWAY WIDTH < 3.90 M.

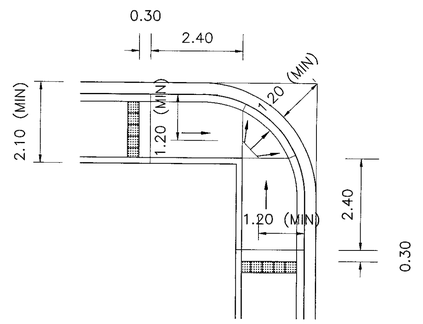

RAMP TYPE 3.3 AT CORNER AREA

NOT TO SCALE

DIAGONAL CURB RAMP

LOCATED ON ⩽ 2.10 M. WALKWAY WIDTH < 2.50 M.

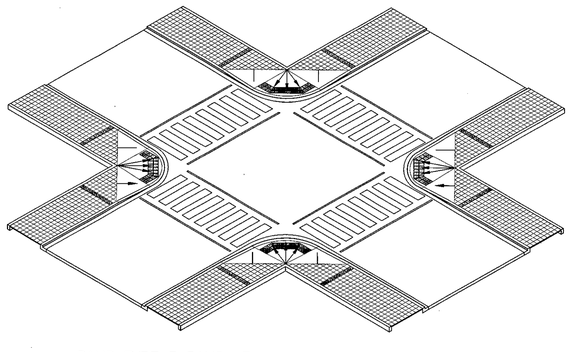

RAMP TYPE 3 RAMP AT THE INTERSECTION CORNER

NOT TO SCALE

DIAGONAL CURB RAMP

DISABILITIES RAMP LOCATED ON THE CORNER OF AN INTERSECTION

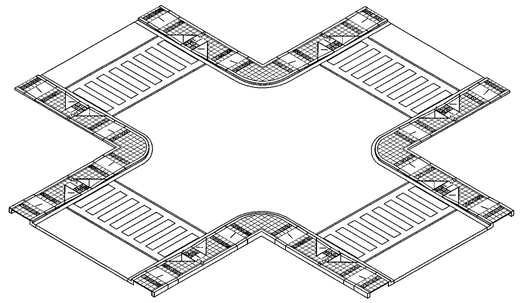

RAMP TYPE 4 AT INTERSECTION ON 2.10M. ⩽ WALKWAY WIDTH < 2.35M.

NOT TO SCALE

PERPENDICULAR/PARALLEL COMBINATION CURB RAMP

PAIRED CURB RAMP LOCATED ON 2.10M.⩽ WALKWAY WIDTH < 2.35M.

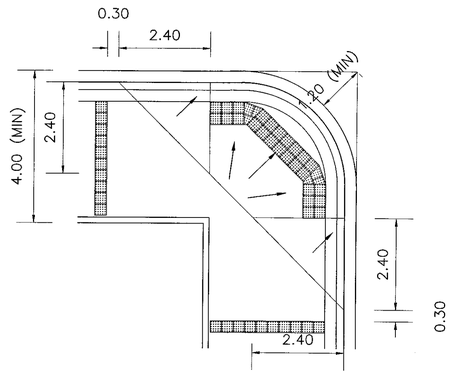

RAMP TYPE 3.2 AT CORNER AREA

NOT TO SCALE

DIAGONAL CURB RAMP

LOCATED ON ⩾ 4.00 M. WALKWAY WIDTH

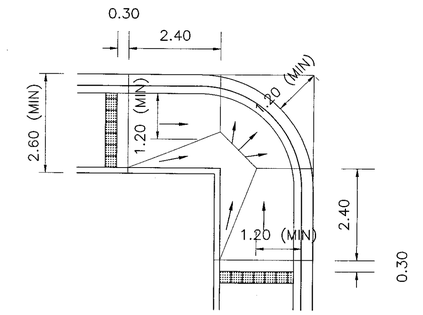

RAMP TYPE 3.4 AT CORNER AREA

NOT TO SCALE

DIAGONAL CURB RAMP

LOCATED ON ⩽ 2.60 M. WALKWAY WIDTH < 2.80 M.

ISOMETRIC VIEW CURB RAMP AT MARKED CROSSING WALK OF INTERSECTION AREAS

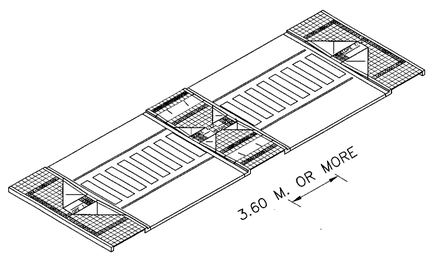

ISOMETRIC VIEW SHOW CROSS WALK WITH MEDIAN WIDTH 3.60 M. OR MORE

NOT TO SCALE

TYPICAL CURB RAMP WITH CURBED SIDES

CURB RAMP LOCATED ON RAISED MEDIAN WIDTH ⩾ 3.60 M.

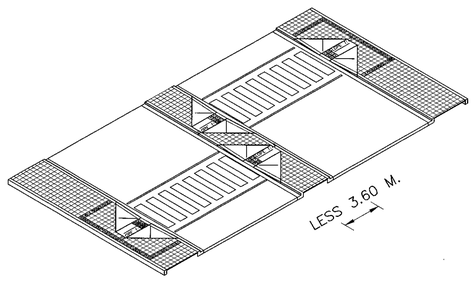

ISOMETRIC VIEW SHOW CROSS WALK WITH MEDIAN WIDTH LESS 3.60 M.

NOT TO SCALE

TYPICAL CURB RAMP WITH CURBED SIDES

CURB RAMP LOCATED ON RAISED MEDIAN WIDTH ⩽ 3.60 M.

ISOMETRIC VIEW SHOW CURB RAMP AT MARKED CROSSING

PLAN RAMP TYPE 3 DIAGONAL CURB RAMP DETAILS

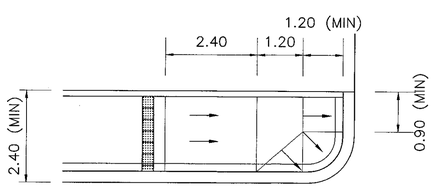

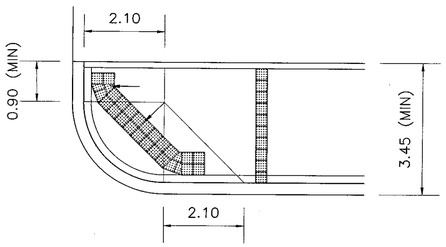

PLAN SHOWS RAMP AT ENTRANCE EXIT AND JUNCTION

NOT TO SCALE

DIAGONAL/PARALLEL COMBINATION CURB RAMP

LOCATED AT JUNCTION

ON VARIES SIDEWALKS

NOTES :

1. DIMENSIONS ARE IN METERS UNLESS OTHERWISE INDICATED.
2. CONCRETE SHALL HAVE A MINIMUM ULTIMATE COMPRESSIVE STRENGTH OF 20 MPa (204 KSC) FOR 15x15x15 CM. CUBE AT 28 DAYS,
3. CEMENT SHALL CONFORM TO TIS. 15 TYPE I PORTLAND CEMENT OR APPROVAL TYPE
4. REINFORCING STEEL SHALL CONFORM TO TIS. 20 GRADE SR 24 FOR ROUND BARS AND TIS. 24 GRADE SD 40 FOR DEFORM BARS.
5. WHITE, BLACK, YELLOW AND RED PAINTS SHALL BE GLOSS ENAMEL PAINT AND CONFORM TO TIS.327
6. FILL UNDER SIDEWALK SHALL BE THE SAME MATERIAL AS EMBANKMENT AND COMPACTED TO 90% (MIN.) STANDARD PROCTOR (DOH – T107)
7. LOCATION FOR CURB MARKING SHALL BE AS SHOW ON PLAN OR DIRECTED BY THE ENGINEER.
8. PROVIDED DETECTABLE WARNING DEVICE 0.30 M. BEFORE REACHING SLOPE (FOR ASSIST VISUAL IMPAIR)
9. WALKWAY STRUCTURE AND MATERIALS DETAIL MUST BE PROCEEDED TO DRAWING OR SPECIFY BY ENGINEER
10. PRECAST CONCRETE TILES SHALL BE CONFORM TO TIS. 378 OR TIS. 826

REF.	REVISION	SIGNATURE	DATE

KINGDOM OF THAILAND

MINISTRY OF TRANSPORT

DEPARTMENT OF HIGHWAYS

STANDARD DRAWING

HANDICAP WALKWAY

RAMP AND WALKWAY AT INTERSECTIONS AND RAISED MEDIAN

DESIGNED : D.O.H. & CONSULTANTS	CHECKED : BUREAU OF LOCATION & DESIGN	DATE : OCT 2015
SUBMITTED : (DIRECTOR OF LOCATION & DESIGN BUREAU)		SCALE : AS SHOWN
APPROVED : (FOR DIRECTOR GENERAL)		DWG NO. EN–403
		SHEET NO. 181

D:\std dwg 2015\EN-403(REV00)

SECTION 7) ROADWAY LIGHTING

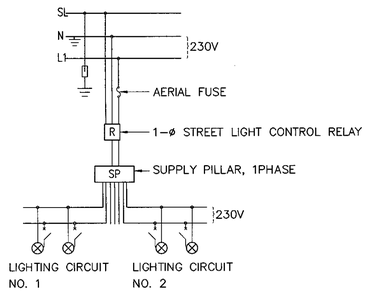

BLOCK DIAGRAM 1

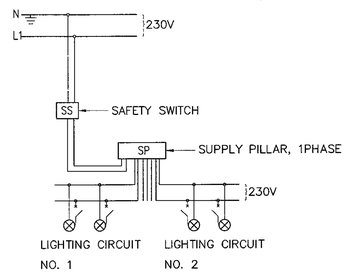

BLOCK DIAGRAM 2

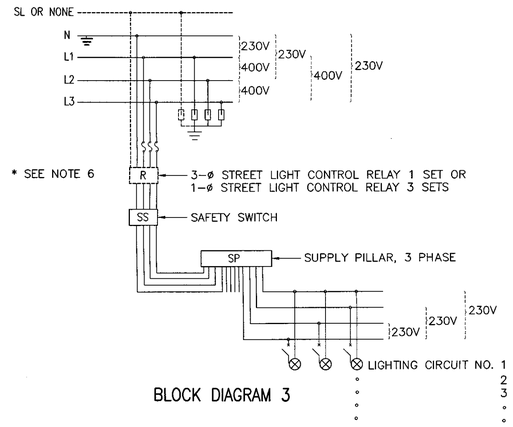

BLOCK DIAGRAM 3

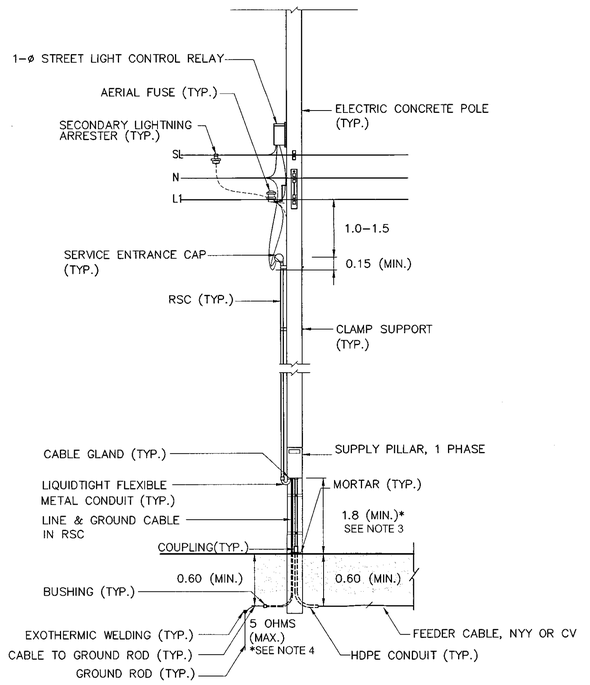

TYPE 1: FOR MEA'S OVERHEAD LINE, 1PH 2WIRE,
NOT IN THE AREA OF UNDERGROUND CABLE PROJECT

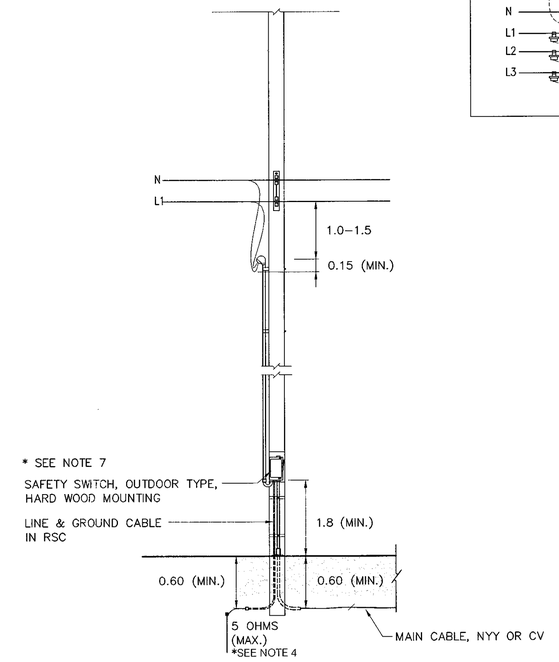

TYPE 2: FOR MEA'S OVERHEAD LINE, 1PH 2WIRE,
IN THE AREA OF UNDERGROUND CABLE PROJECT

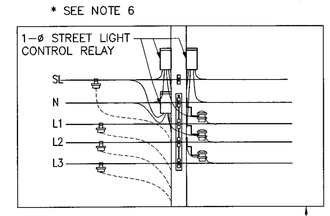

OR

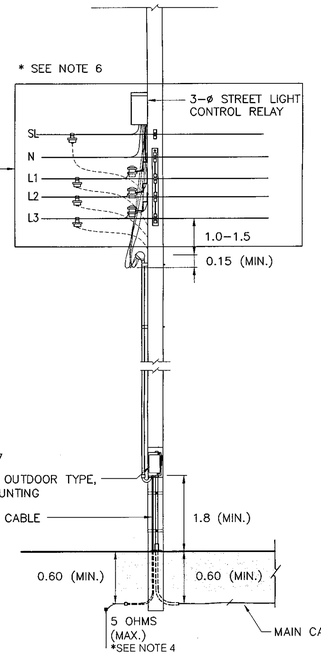

TYPE 3: FOR MEA'S OVERHEAD LINE, 3PH 4WIRE,
IN OR NOT IN THE AREA OF UNDERGROUND CABLE PROJECT

TYPICAL CONNECTION LAYOUT AND BLOCK DIAGRAM
NOT TO SCALE

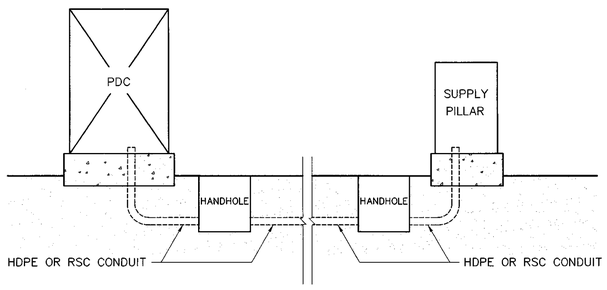

TYPE 4: FOR MEA'S UNDERGROUND LINE, 1PH 2WIRE OR 3PH 4WIRE,
IN UNDERGROUND SERVICE AREA

NOTES :

1. ALL DIMENSIONS ARE IN METERS UNLESS OTHERWISE INDICATED.
2. FOR GROUNDING SCHEMATIC, SEE DRAWING NO. EE–103.
3. IF RCD EQUIPPED IN SUPPLY PILLAR, THE HEIGHT MAY BE REDUCED TO 1.5 METERS.
4. FOR THE AREA DIFFICULTLY TO MAINTENANCE WITH APPROVAL OF MEA, THE RESISTANCE BETWEEN GROUND AND GROUND ROD ALLOWED BE MORE THAN 5 OHMES BUT NOT EXCEED TO 25 OHMS.
5. IF SUPPLY PILLAR INSTALLED ON METERING POLE, THE SAFETY SWITCH IS NOT INSTALLED. THE INSTALLATION IS THE SAME AS TYPE 1.
6. FOR IN THE AREA OF MEA'S UNDERGROUND CABLE PROJECT PLAN, THE CONTROL RELAY IS NOT INSTALLED.
7. THE ENCLOSED CIRCUIT BREAKER WITH METALLIC HOUSING, OUTDOOR TYPE, MAY BE USED IN STEAD OF SAFETY SWITCH.
8. THE EQUIPMENT, TRANSPORTATION, MAINTENANCE, INSTALLATION AND ETC., SHALL BE CONFORMED TO THE DOH'S GENERAL SPECIFICATION AND STANDARD OF STREET LIGHTING AND SPECIAL PROVISION (IF ANY).

REF.	REVISION	SIGNATURE	DATE

KINGDOM OF THAILAND

MINISTRY OF TRANSPORT
DEPARTMENT OF HIGHWAYS

STANDARD DRAWING
ROADWAY LIGHTING
ELECTRICAL CONNECTION TO MEA'S POWER SUPPLY

DESIGNED : D.O.H. & CONSULTANTS	CHECKED : BUREAU OF LOCATION & DESIGN	DATE : OCT 2015
SUBMITTED : (DIRECTOR OF LOCATION & DESIGN BUREAU)		SCALE : AS SHOWN
APPROVED : (FOR DIRECTOR GENERAL)		DWG NO. EE–101
		SHEET NO. 182

D:\std dwg 2015\EE-101(REV00)

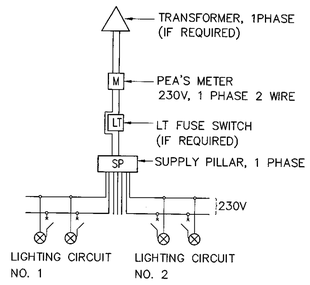

BLOCK DIAGRAM 1

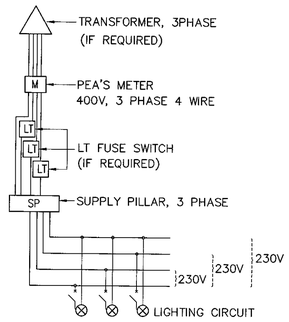

BLOCK DIAGRAM 2

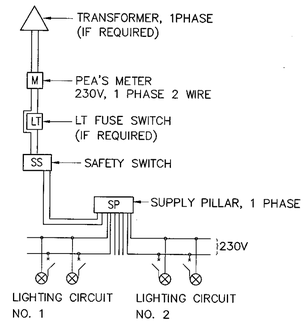

BLOCK DIAGRAM 3

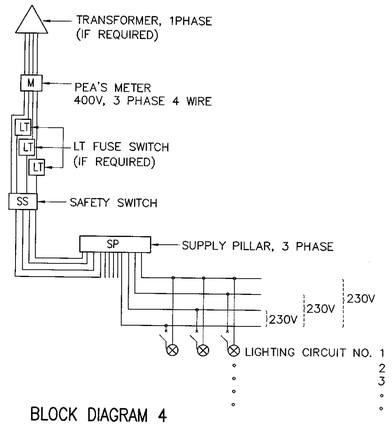

BLOCK DIAGRAM 4

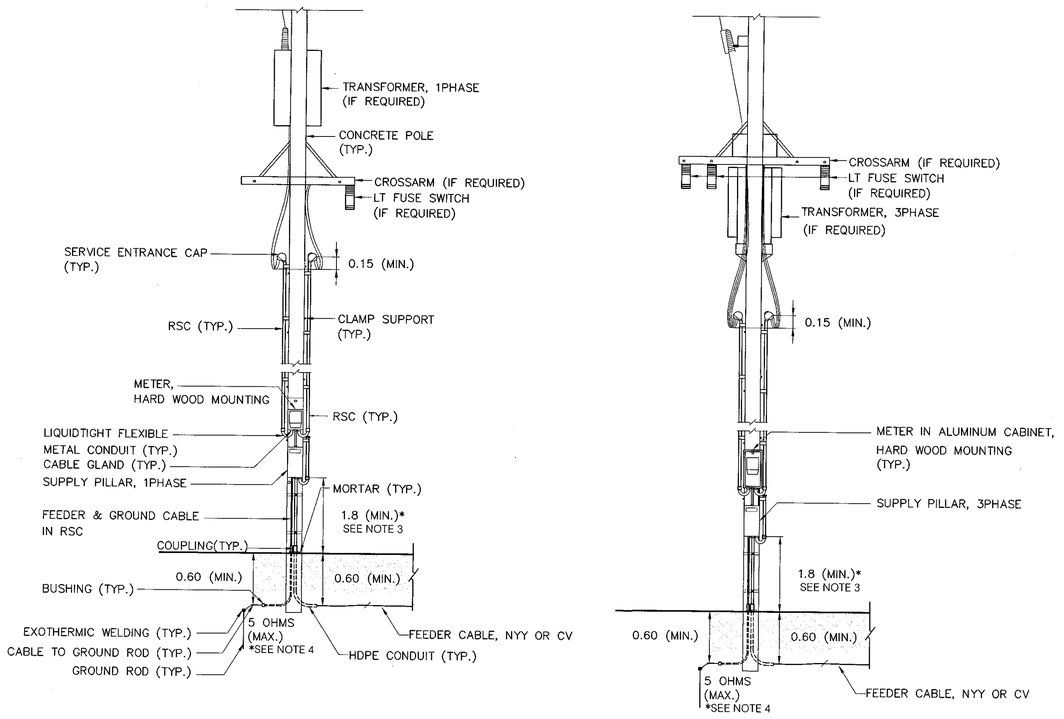

TYPE 1,2: FOR SUPPLY PILLAR INSTALLED ON METERING POLE

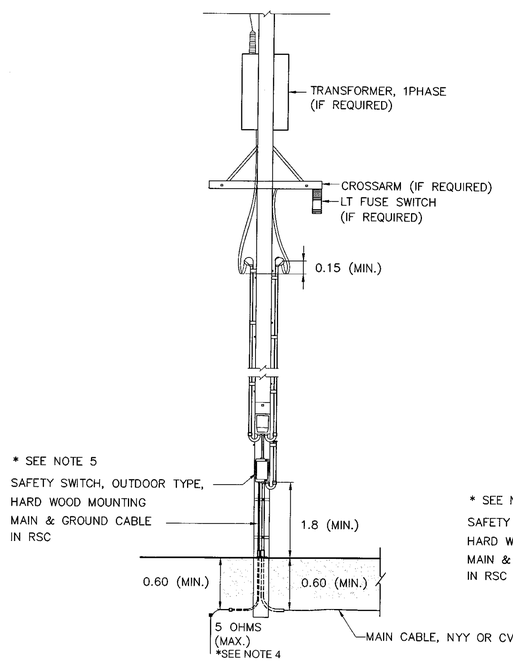

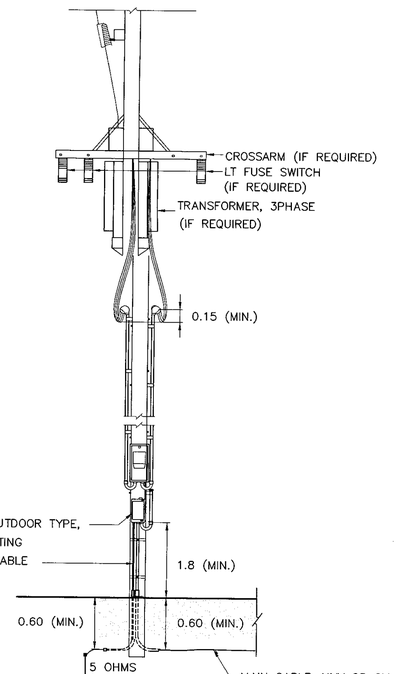

TYPE 3,4: FOR SUPPLY PILLAR NOT INSTALLED ON METERING POLE

TYPICAL CONNECTION LAYOUT AND BLOCK DIAGRAM

NOT TO SCALE

NOTES :

1. ALL DIMENSIONS ARE IN METERS UNLESS OTHERWISE INDICATED.
2. FOR GROUNDING SCHEMATIC, SEE DRAWING NO. EE-103.
3. IF RCD EQUIPPED IN SUPPLY PILLAR, THE HEIGHT MAY BE REDUCED TO 1.5 METERS.
4. FOR THE AREA DIFFICULTLY TO MAINTENANCE WITH APPROVAL OF PEA, THE RESISTANCE BETWEEN GROUND AND GROUND ROD ALLOWED BE MORE THAN 5 OHMES BUT NOT EXCEED TO 25 OHMS.
5. THE ENCLOSED CIRCUIT BREAKER WITH METALLIC HOUSING, OUTDOOR TYPE, MAY BE USED IN STEAD OF SAFETY SWITCH.
6. THE EQUIPMENT, TRANSPORTATION, MAINTENANCE, INSTALLATION AND ETC., SHALL BE CONFORMED TO THE DOH'S GENERAL SPECIFICATION AND STANDARD OF STREET LIGHTING AND SPECIAL PROVISION (IF ANY).

REF.	REVISION	SIGNATURE	DATE

KINGDOM OF THAILAND

MINISTRY OF TRANSPORT
DEPARTMENT OF HIGHWAYS

STANDARD DRAWING

ROADWAY LIGHTING
ELECTRICAL CONNECTION TO PEA'S POWER SUPPLY

DESIGNED : D.O.H. & CONSULTANTS	**CHECKED :** BUREAU OF LOCATION & DESIGN	**DATE :** OCT 2015
SUBMITTED : (DIRECTOR OF LOCATION & DESIGN BUREAU)		**SCALE :** AS SHOWN
APPROVED : (FOR DIRECTOR GENERAL)		**DWG NO.** EE-102
		SHEET NO. 183

D:\std dwg 2015\EE-102(REV00)

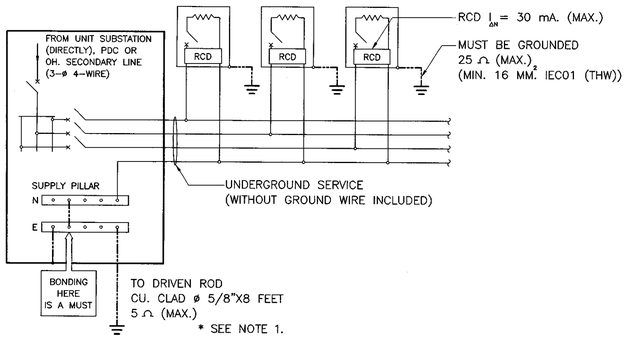

METHOD Ⓐ : LIGHTING WITHOUT HIGH–MAST TECHNIQUES FOR GROUND–LEVEL ROAD (LIGHTING POLE/COLUMN ACCESSIBLE TO PUBLIC)

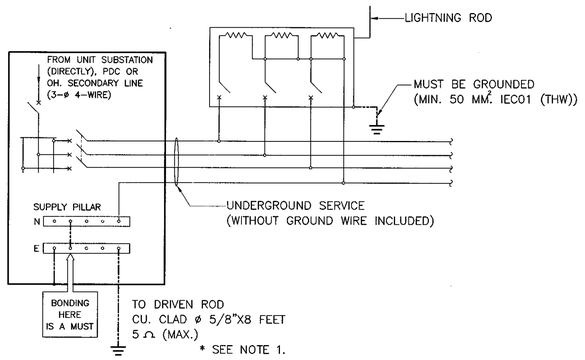

METHOD Ⓑ : LIGHTING WITH HIGH–MAST TECHNIQUES FOR ROAD (LIGHTING POLE/COLUMN INACCESSIBLE TO PUBLIC)

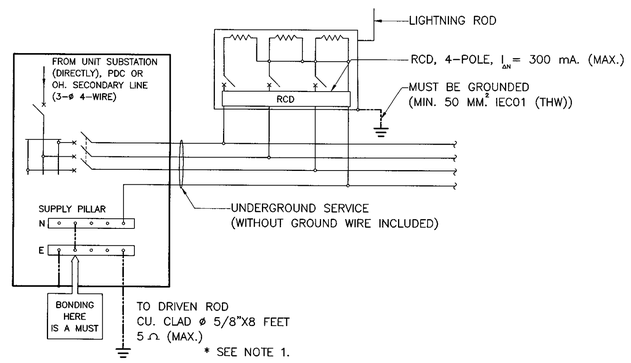

METHOD Ⓒ : LIGHTING WITH HIGH–MAST TECHNIQUES FOR ROAD (LIGHTING POLE/COLUMN ACCESSIBLE TO PUBLIC)

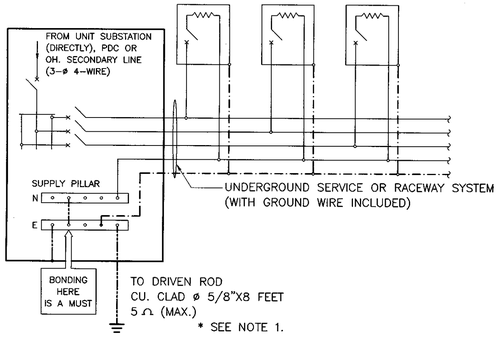

METHOD Ⓓ : LIGHTING FOR ELEVATED ROAD (LIGHTING POLE/COLUMN INACCESSIBLE TO PUBLIC) & ROAD TUNNEL (LIGHTING LUMINAIRE)

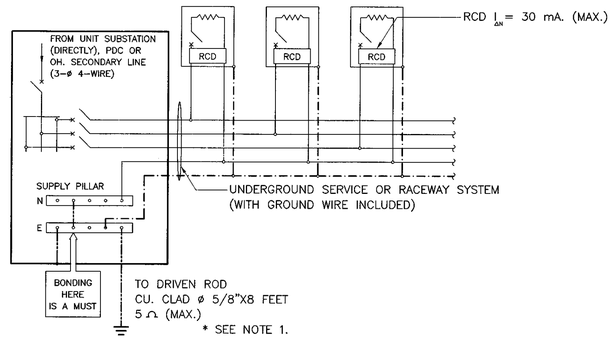

METHOD Ⓔ : LIGHTING FOR ELEVATED ROAD (LIGHTING POLE/COLUMN ACCESSIBLE TO PUBLIC)

NOTES :

1. FOR THE AREA DIFFICULTLY TO MAINTENANCE WITH APPROVAL OF MEA/PEA, THE RESISTANCE BETWEEN GROUND AND GROUND ROD ALLOWED BE MORE THAN 5 OHMES BUT NOT EXCEED TO 25 OHMS.
2. THIS GROUNDING SCHEMATICS ARE ALSO APPLIED FOR 1 PHASE ELECTRICAL SYSTEM.
3. INITAIL DRAWING: MEA STANDARD DRAWING REF. DWG. NO. UG–10–004, REVISION NO.1, DATED 31ST JULY 2014.

SYMBOLS

- = LIGHTING POLE/COLUMN (METALLIC) OR LUMINAIRE (METALLIC) IN TUNNELS
- = OVERCURRENT PROTECTION (CB OR FUSE)
- RCD = RESIDUAL CURRENT DEVICE
- —·—·— = GROUND WIRE / EQUIPMENT GROUNDING CONDUCTOR (GREEN OR GREEN/YELLOW INSULATED WIRE)
- ———— = BOND WIRE & GROUNDING ELECTRODE CONDUCTOR 16 MM.² CU INSULATED(MIN.) OR OTHERWISE INDICATED ON THE DRAWING.

REF.	REVISION	SIGNATURE	DATE

KINGDOM OF THAILAND

MINISTRY OF TRANSPORT
DEPARTMENT OF HIGHWAYS

STANDARD DRAWING

ROADWAY LIGHTING
GROUNDING SCHEMATIC

DESIGNED : D.O.H. & CONSULTANTS	CHECKED : BUREAU OF LOCATION & DESIGN	DATE : OCT 2015
SUBMITTED : (DIRECTOR OF LOCATION & DESIGN BUREAU)		SCALE : AS SHOWN
APPROVED : (FOR DIRECTOR GENERAL)		DWG NO. EE–103
		SHEET NO. 184

D:\std dwg 2015\EE-10X(REV00)

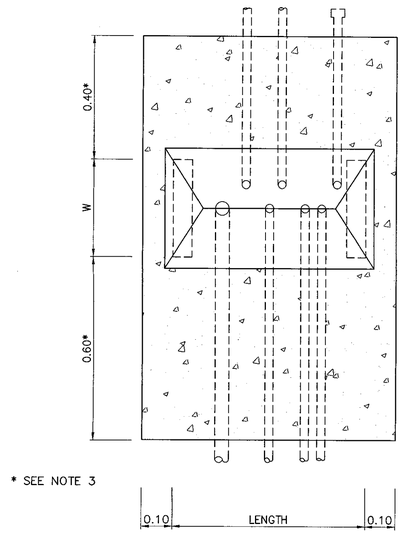

* SEE NOTE 3

PLAN

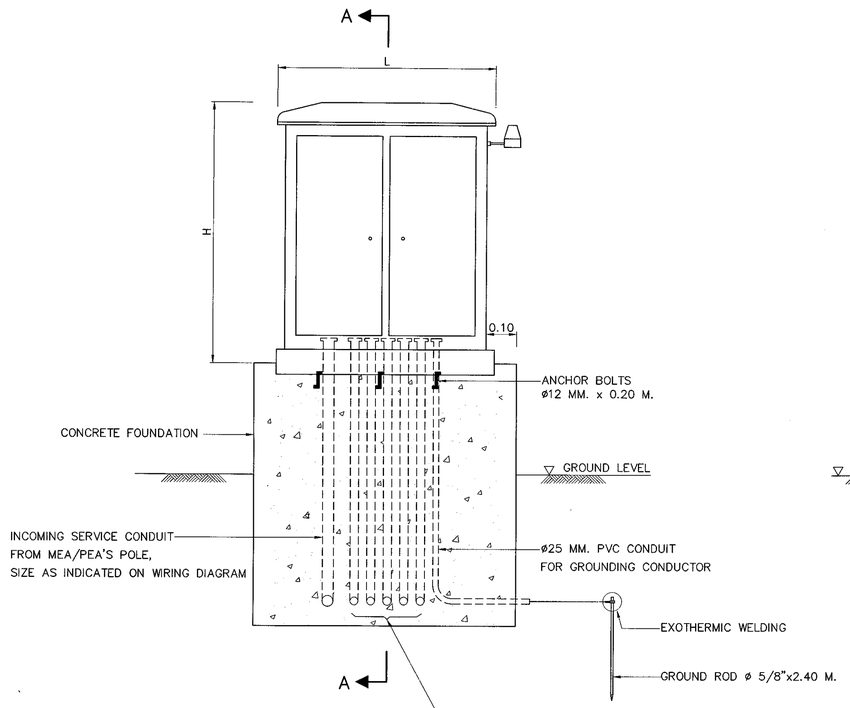

ELEVATION

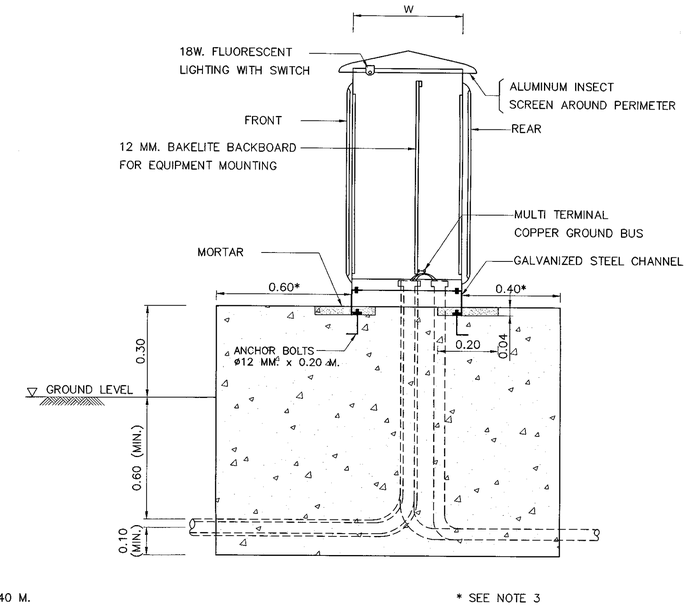

* SEE NOTE 3

SECTION A–A

SUPPLY PILLAR ON CONCRETE FOUNDATION

NOT TO SCALE

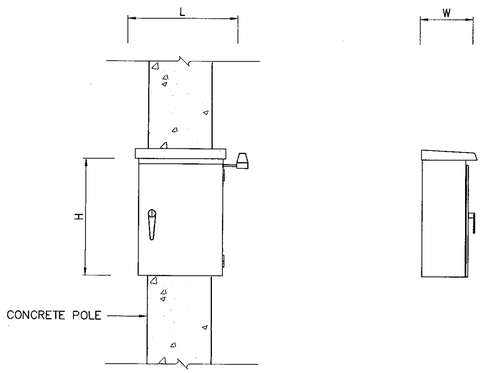

ELEVATION

SUPPLY PILLAR ON CONCRETE POLE

NOT TO SCALE

NOTES :

1. ALL DIMENSIONS ARE IN METERS UNLESS OTHERWISE INDICATED.
2. CONCRETE SHALL HAVE A MINIMUM ULTIMATE COMPRESSIVE STRENGTH OF 20 MPa. (204 KSC) FOR 15x15x15 CM. CURB AT 28 DAYS.
3. THE DISTANCE MAY WITH THE PERMISSION OF DOH BE REDUCED OR SPECIFIED ON THE DRAWING.
4. THE EQUIPMENT, TRANSPORTATION, MAINTENANCE, INSTALLATION AND ETC., SHALL BE CONFORMED TO THE DOH'S GENERAL SPECIFICATION AND STANDARD OF STREET LIGHTING AND SPECIAL PROVISION (IF ANY).
5. THE PANEL SHALL BE CONSTRUCTED IN 2 MM. THICK (MIN.) SHEET STEEL, GALVANIZED, ONE COAT OF PRIMER BOTH INSIDE AND OUTSIDE, AND FINISED 1 COATED. THE HOUSING SHALL BE OF SELF VENTILATING AND PROTECT THE CONTENTS FROM THE EFFECTS OF WATER, DUST OR INSECT. THE DOORS SHALL PROVIDE WITH A PADLOCK TO PROTECT FROM OTHER PERSON.
6. ALL EQUIPMENT AND WIRING INSIDE THE SUPPLY PILLAR SHALL BE COMPLETE FACTORY ASSEMBLY.
7. CIRCUIT BREAKER SHALL BE QUICK–MAKE, QUICK–BREAK AND TRIP FREE FOR OVERCURRENT AND SHORT CIRCUIT CURRENT PROTECTION, TRIP RATING AS INDICATED ON THE DRAWING.
8. LIGHTING CONTACTOR SHALL BE DISCHARGE LIGHTING LOAD AND HAVE THE RATING OF CONTACTOR AS INDICATED ON DIAGRAM.
9. PHOTO SWITCH SHALL BE OUTDOOR TYPE, OPERATING VOLTAGE 220–240 VAC. THE OPREATION SHALL BE FAIL SAVE BY MEAN OF THE LIGHT ARE ALWAYS ON, IF PHOTO SWITCH IS FAILED. THE EQUIPMENT SHALL BE SUITABLE FOR USE IN TROPICAL CLIMATIC OF THAILAND. THE RATING SHALL BE ABLE TO WITHSTAND THE INRUSH CURRENT TO COIL. THE LOCATION CAN BE SUITABLE ADJUSTED AT THE DISCRETION OF THE ENGINEER.
10. THE SIZING OF SUPPLY PILLAR TO ACCOMMODATE ALL EQUIPMENT INSTALLED AND ALLOW FOR USABLE SPACE 10%(MIN.) FOR FUTURE ADDITION.
11. THE CONTRACTOR SHALL PROVIDE
    - LOAD SCHEDULE WITH CLEAR PLASTIC STRIP ADHERED ON THE INSIDE OF THE DOOR.
    - ELECTRICAL HAZARD SIGN OF APPROVED BY DOH ATTACHED ON THE OUTSIDE OF THE DOOR.
    - LIGHTING AND RECEPTACLE EQUIPPED INSIDE FOR MAINTENANCE (IF SPECIFIED).

REF.	REVISION	SIGNATURE	DATE

KINGDOM OF THAILAND

MINISTRY OF TRANSPORT

DEPARTMENT OF HIGHWAYS

STANDARD DRAWING

ROADWAY LIGHTING

SUPPLY PILLAR DETAILS AND INSTALLATION

DESIGNED : D.O.H. & CONSULTANTS	**CHECKED :** BUREAU OF LOCATION & DESIGN	**DATE :** OCT 2015
SUBMITTED : (DIRECTOR OF LOCATION & DESIGN BUREAU)		**SCALE :** AS SHOWN
APPROVED : (FOR DIRECTOR GENERAL)		**DWG NO.** EE–104
		SHEET NO. 185

D:\std dwg 2015\EE-104(REV00)

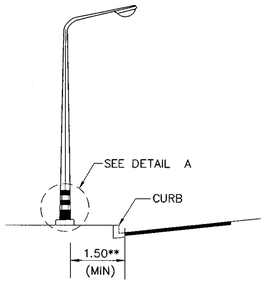

** SEE NOTE4

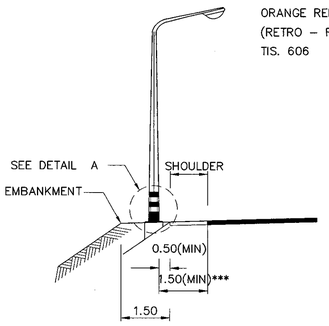

*** SEE NOTE5

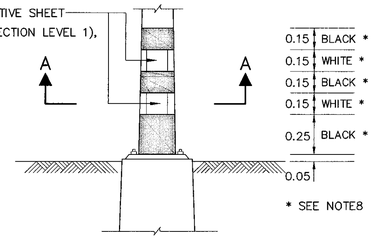

DETAIL A

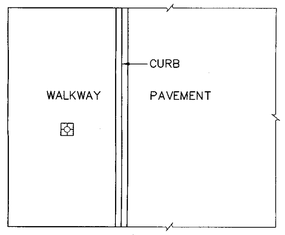

ON WALKWAY

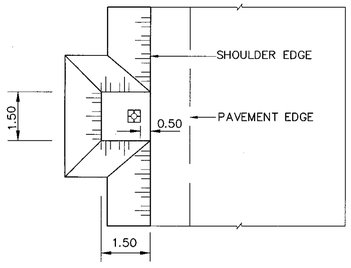

ON SHOULDER

LOCATION OF LIGHTING POLE, AT GRADE

NOT TO SCALE

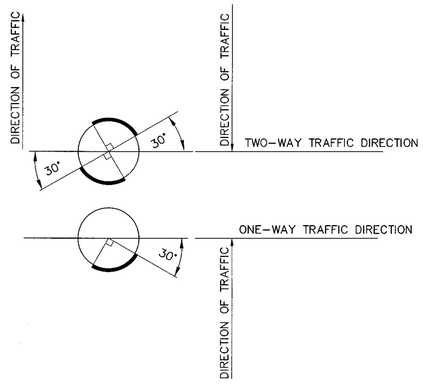

SECTION A–A

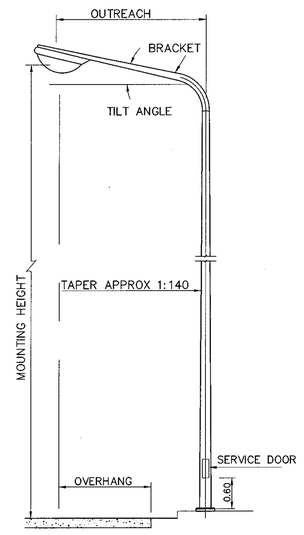

LIGHTING POLE, SINGLE ARM

NOT TO SCALE

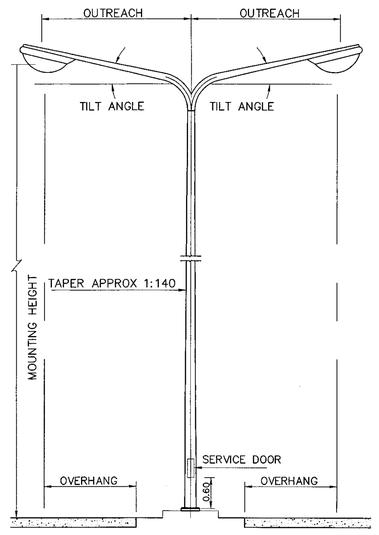

LIGHTING POLE, DOUBLE ARM

NOT TO SCALE

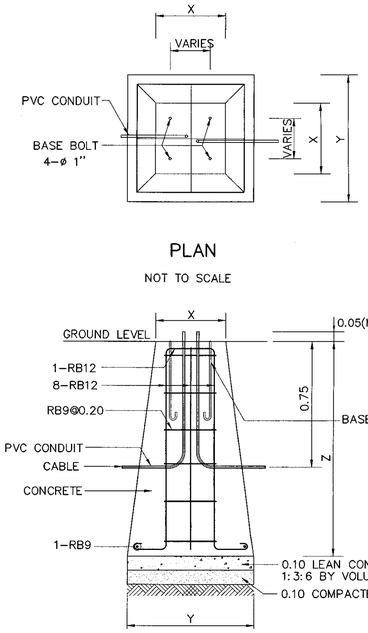

LIGHTING POLE FOUNDATION DETAILS

NOT TO SCALE

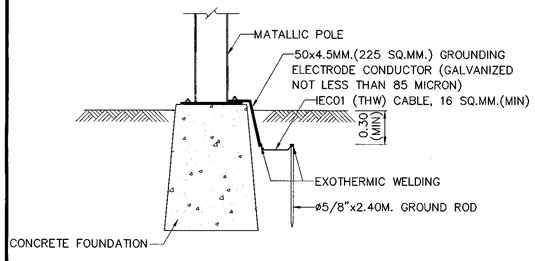

GROUDING DETAILS

NOT TO SCALE

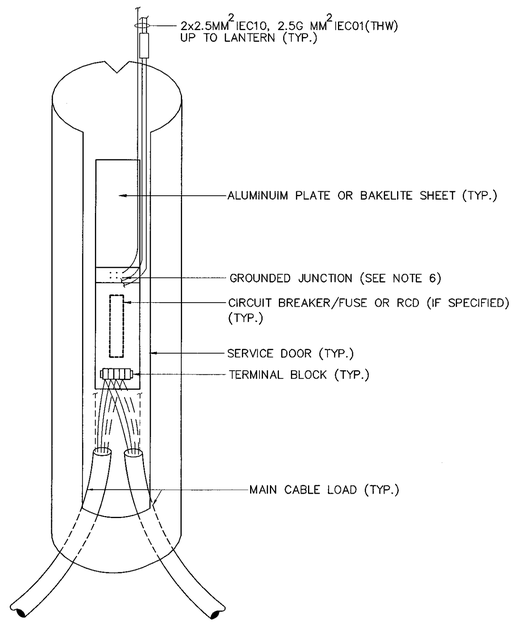

TYPE1: FOR LIGHTING POLE, SINGLE ARM OR DOUBLE ARM(1 PHASE)

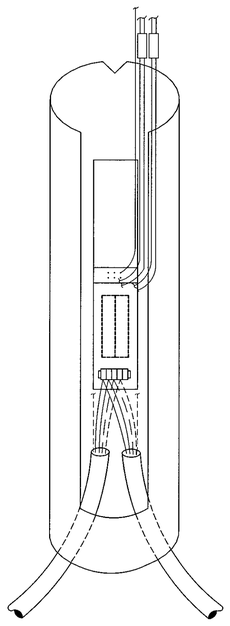

TYPE 2: FOR LIGHTING POLE, DOUBLE ARM(2 PHASE)

SERVICE DOOR DETAILS

NOT TO SCALE

TABLE

HEIGHT (M)	X(CM)	Y(CM)	Z(CM)	REMARK
9	40x40	80x80	120	FOR SIDE ENTRY OR POST TOP MOUNTING
12	50x50	100x100	120	FOR SIDE ENTRY OR POST TOP MOUNTING

NOTES :

1. ALL DIMENSIONS ARE IN METERS UNLESS OTHERWISE INDICATED.
2. CONCRETE SHALL HAVE A MINIMUM ULTIMATE COMPRESSIVE STRENGTH OF 30 MPa. (306 KSC) FOR 15x15x15 CM. CURB AT 28 DAYS.
3. REINFORCING STEEL SHALL BE GRADE SR24 (TIS. 20).
4. FOR THE CENTRAL URBAN AREA WHERE CURB CONSTRUCTED AT THE EDGE OF PAVEMENT, THE MINIMUM CLEARANCE BETWEEN COLUMNS AND THE EDGE OF THE PAVEMENT SHALL NORMALLY BE 1.5 METERS BUT NOT LESS THAN 0.75 METERS. THE MINIMUM CLEARANCE MAY WITH THE PREVIOUS PERMISSION OF DOH BE REDUCED OR SPECIFIED ON THE DRAWING.
5. THE MINIMUM CLEARANCE BETWEEN COLUMNS AND SHOULDER SHALL NOT BE LESS THAN 0.5 METERS. WHERE NO SHOULDER, THE CLEARANCE BETWEEN COLUMNS AND THE EDGE OF THE PAVEMENT SHALL NOT BE LESS THAN 1.5 METERS. BUT WHERE THER IS NOT REASONABLY ATTAINABLE SUCH BRIDGE AND LIMITED SPACE AREA, THE MINIMUM CLEARANCE MAY WITH THE PREVIOUS PERMISSION OF DOH BE REDUCED BUT NOT LESS THAN 1.0 METERS.
6. THE LOCATION OF GROUND JUNCTION CAN BE ADJUSTED BY THE DESIGN ENGINEER DECISION.
7. THE PILE FOOTING USING PC.PILE Ø–0.20M.x0.20M. (ALLOWABLE LOAD = 8 TON/PILE) IS REQUIRED. FOR SOFT CLAY OR SLOPE SHOULDER CONDITION. THE CONTRACTOR SHALL SUBMIT THE PREVIOUS DRAWING TO THE ENGINEER PRIOR TO CONSTRUCTION.
8. THE PAINTING AT THE BOTTOM OF LIGHTING POLE SHALL BE ALKYD COATING (TIS. 327).

REF.	REVISION	SIGNATURE	DATE

KINGDOM OF THAILAND

MINISTRY OF TRANSPORT
DEPARTMENT OF HIGHWAYS

STANDARD DRAWING

ROADWAY LIGHTING

LIGHTING POLE INSTALLATION FOR GROUND LEVEL ROAD

DESIGNED : D.O.H. & CONSULTANTS	**CHECKED :** BUREAU OF LOCATION & DESIGN	**DATE :** OCT 2015
SUBMITTED : (DIRECTOR OF LOCATION & DESIGN BUREAU)		**SCALE :** AS SHOWN
APPROVED : (FOR DIRECTOR GENERAL)		**DWG NO.** EE–105
		SHEET NO. 186

D:\std dwg 2015\EE-105(REV00)

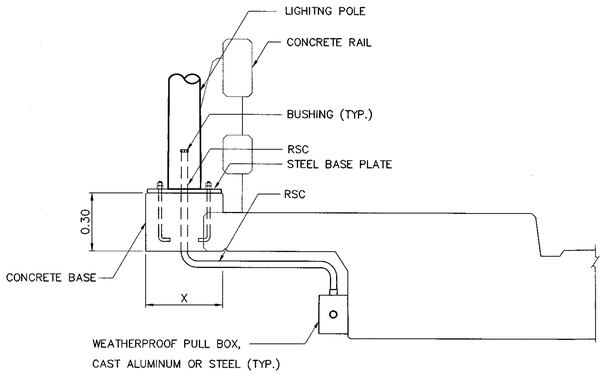

SECTION A–A
NOT TO SCALE

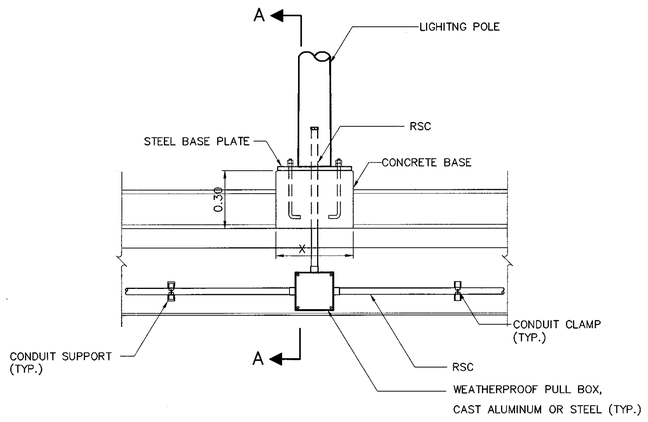

LIGHTING POLE ON WALKWAY BARRIER
NOT TO SCALE

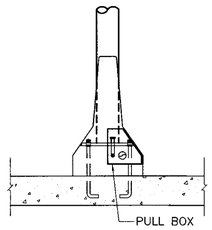

SECTION D–D
NOT TO SCALE

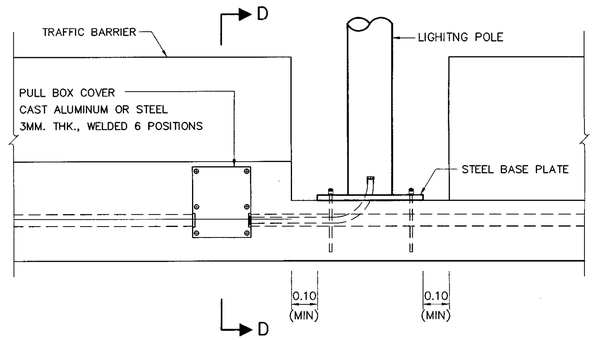

LIGHTING POLE ON MEDIAN BARRIER
NOT TO SCALE

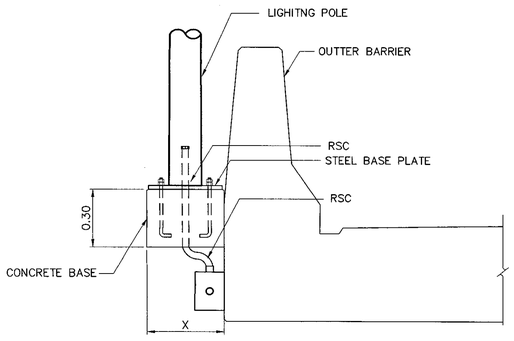

SECTION B–B
NOT TO SCALE

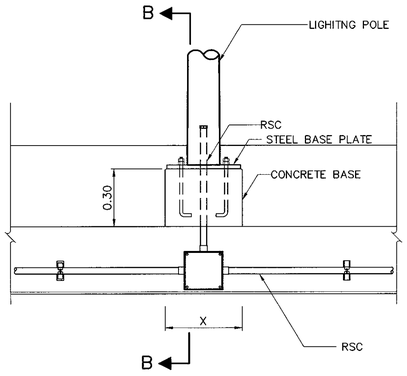

LIGHTING POLE ON OUTTER BARRIER TYPE 1
NOT TO SCALE

TABLE OF CONCRETE BASE DIMENSION

HEIGHT OF LIGHTING POLE (M)	X(CM)
9	40x40
12	50x50

NOTES :

1. ALL DIMENSIONS ARE IN METERS UNLESS OTHERWISE INDICATED.
2. CONCRETE SHALL HAVE A MINIMUM ULTIMATE COMPRESSIVE STRENGTH OF 30 MPa. (306 KSC) FOR 15x15x15 CM. CURB AT 28 DAYS.
3. REINFORCING STEEL AS FOLLOWS:
   3.1 TIS.20, GRADE SR24 FOR ROUND BAR.
   3.2 TIS.24, GRADE SR40 FOR DEFORM BAR.
4. ALL EXPOSED CONCRETE CORNERS SHALL HAVE 20MM. CHAMFER.
5. THE LOCATION OF LIGHTING POLE SHOULD BE MOUNTED ON OR NEAR THE LINE OF COLUMN PILE OF BRIDGE.

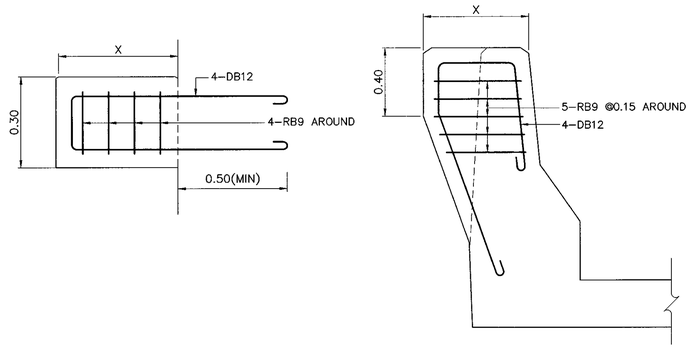

REINFORCING STEEL OF LIGHTING POLE BASE DETAILS
NOT TO SCALE

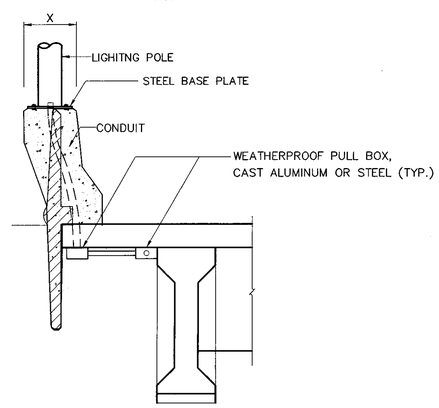

SECTION C–C
NOT TO SCALE

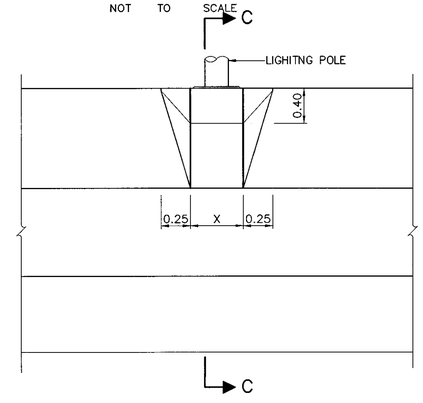

LIGHTING POLE ON OUTTER BARRIER TYPE 2
NOT TO SCALE

KINGDOM OF THAILAND

MINISTRY OF TRANSPORT
DEPARTMENT OF HIGHWAYS

STANDARD DRAWING

ROADWAY LIGHTING
LIGHTING POLE INSTALLATION FOR ELEVATED ROAD

DESIGNED : D.O.H. & CONSULTANTS	CHECKED : BUREAU OF LOCATION & DESIGN		DATE : OCT 2015
SUBMITTED : (DIRECTOR OF LOCATION & DESIGN BUREAU)			SCALE : AS SHOWN
APPROVED : (FOR DIRECTOR GENERAL)			DWG NO. EE–106
			SHEET NO. 187

REF.	REVISION	SIGNATURE	DATE

D:\std dwg 2015\EE-106(REV00)

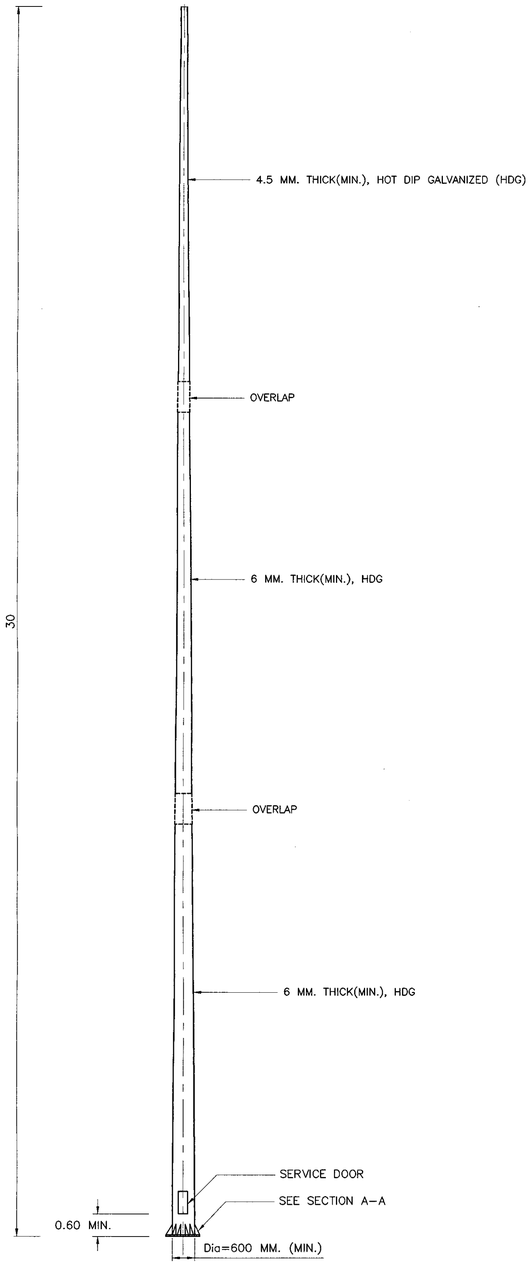

30 M. POLE

NOT TO SCALE

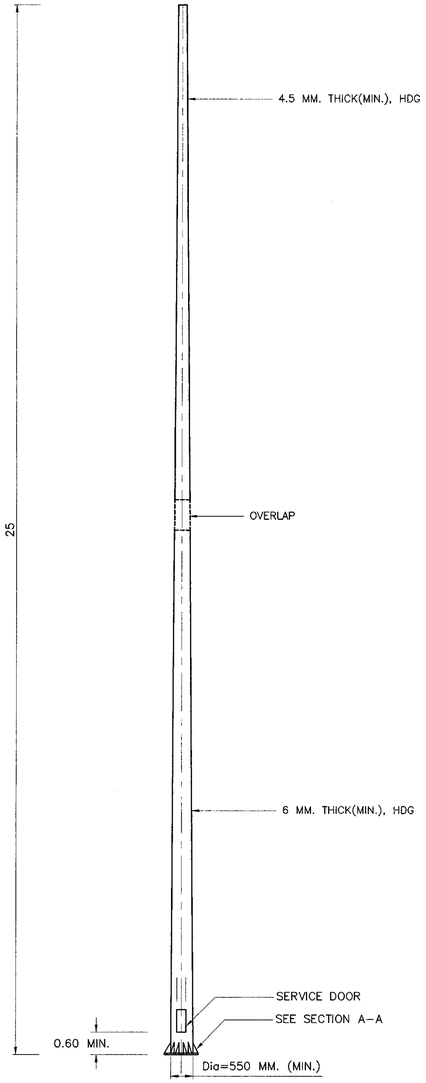

25 M. POLE

NOT TO SCALE

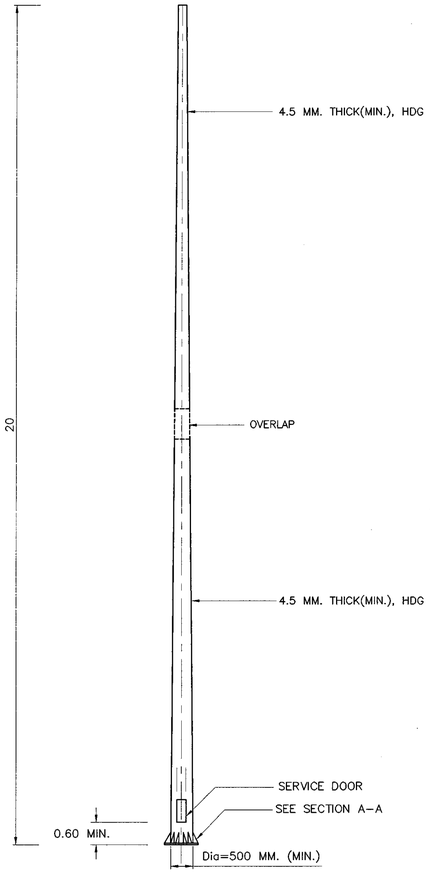

20 M. POLE

NOT TO SCALE

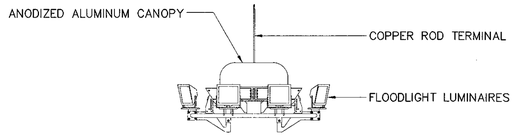

LUMINAIRES CARRAIGE

NOT TO SCALE

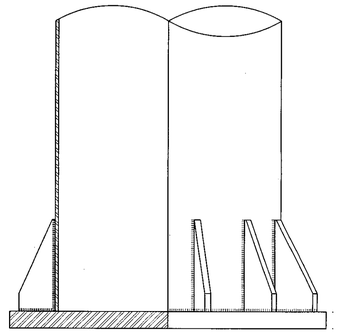

SECTION A–A

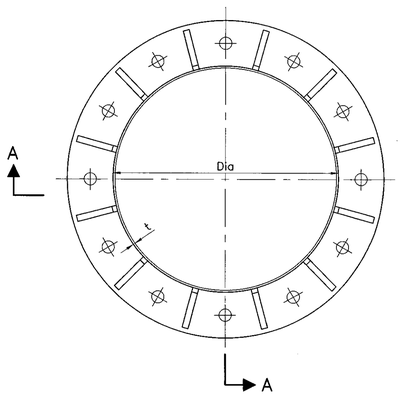

PLAN

PLAN–BASE PLATE

NOT TO SCALE

NOTES :

1. ALL DIMENSIONS ARE IN METERS UNLESS OTHERWISE INDICATED.
2. THE DETAILS OF HIGH MAST LIGHTING POLE AS SHOWN ON THIS DRAWING ARE THE GUIDE ONLY. THEY CAN BE CHANGED AS THE DECISION OF THE DESIGN ENGINEER OR SUPERVISED ENGINEER. THE MINIMUM DIAMETER OF HIGH MAST LIGHTING POLE IS STRONGLY RECOMMENDED UNLESS TEST CERTIFICATES OF APPROVAL BY THE RELIABILITY INSTITUTION ARE SUBMITTED TO DOH.
3. FOR THE TESTING AND STANDARD SPECIFICATION OF MATERIAL COULD NOT CARRIED OUT BY DOH, THE RELIABILITY INSTITUTION'S DOCUMENT SHOWING THE PROPERTIES OF MATERIAL SHALL BE SUBMITTED TO DOH FOR APPROVAL.
4. THE CONTRATOR SHALL SUBMIT THE CALCULATION SHEETS OF THE STRENGTH OF POLE AND STEEL BASE PLATE WITHSTAND WITH THE WIND SPEED ON THE SITE CONDITION TO DOH FOR APPROVAL PRIOR TO ASSAMBLY AND INSTALLATION.

REF.	REVISION	SIGNATURE	DATE

KINGDOM OF THAILAND

MINISTRY OF TRANSPORT

DEPARTMENT OF HIGHWAYS

STANDARD DRAWING

ROADWAY LIGHTING

HIGH MAST LIGHTING POLE

DESIGNED : D.O.H. & CONSULTANTS	**CHECKED :** BUREAU OF LOCATION & DESIGN	**DATE :** OCT 2015
SUBMITTED : (DIRECTOR OF LOCATION & DESIGN BUREAU)		**SCALE :** AS SHOWN
APPROVED : (FOR DIRECTOR GENERAL)		**DWG NO.** EE–107
		SHEET NO. 188

D:\std dwg 2015\EE-107(REV00)

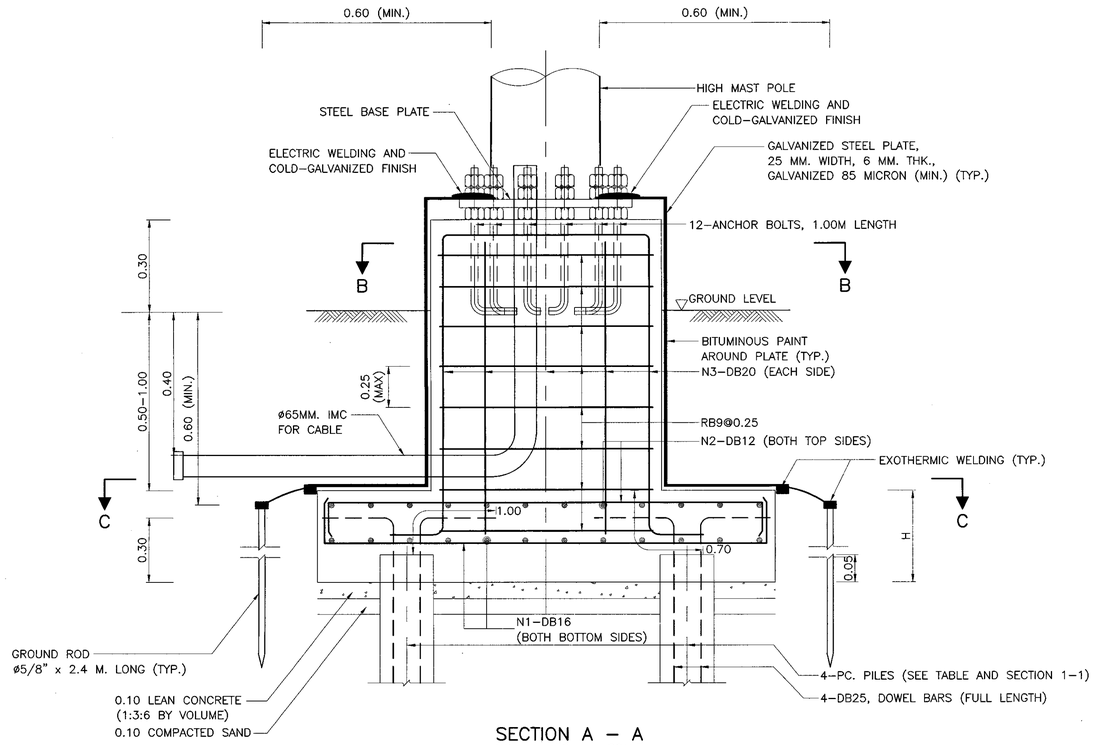

SECTION A – A
NOT TO SCALE

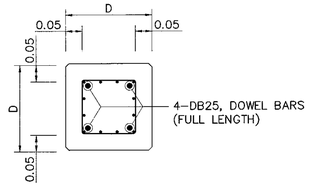

SECTION 1-1
NOT TO SCALE

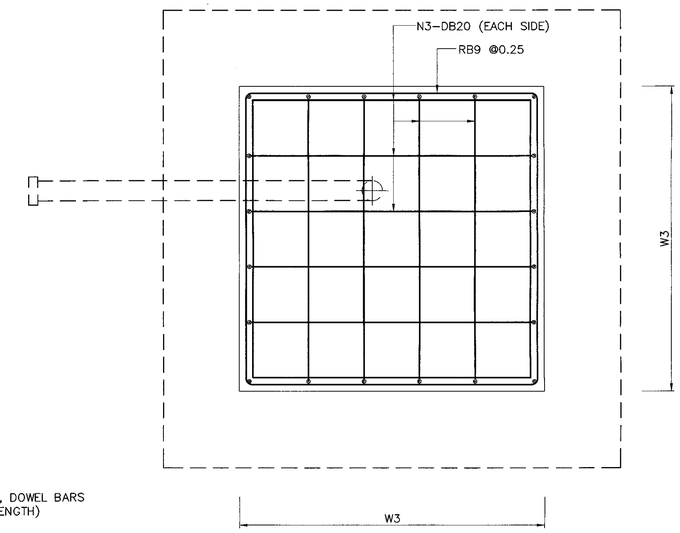

SECTION B-B
NOT TO SCALE

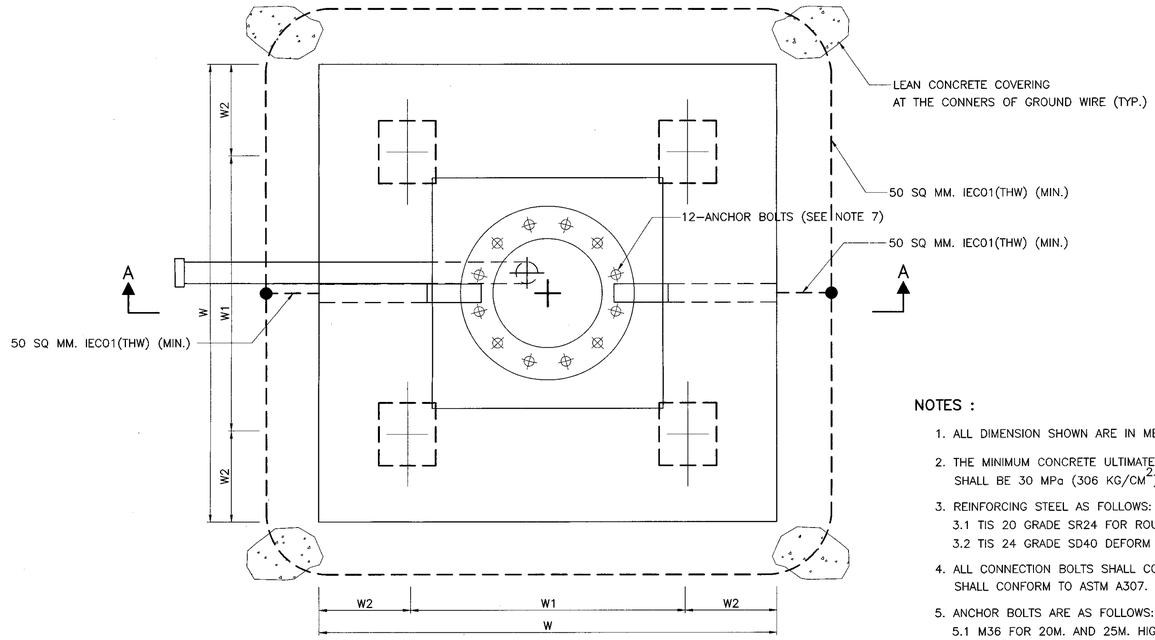

PLAN
NOT TO SCALE

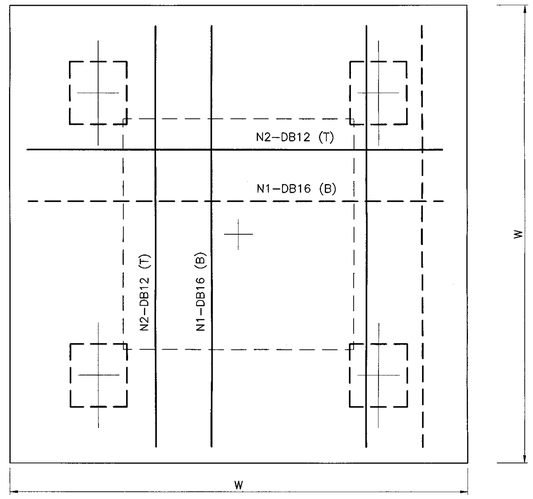

SECTION C-C
NOT TO SCALE

TABLE OF DIMENSION, REINFORCEMENT, SIZE OF PILE AND DOWEL BAR

POLE HEIGHT (M.)	DIMENSION (M.)					NO. OF REINFORCEMENT			PILE (DxDxL*)	ALLOWABLE LOAD** (KN)
	W	W1	W2	W3	H	N1	N2	N3		
20	1.60	1.00	0.30	0.80	0.45	8	8	6	0.22x0.22xL*	100
25	1.80	1.20	0.30	0.90	0.45	13	13	7	0.22x0.22xL*	130
30	2.00	1.40	0.30	1.00	0.50	16	16	8	0.26X0.26XL*	160

NOTES :

1. ALL DIMENSION SHOWN ARE IN METERS UNLESS OTHERWISE INDICATED.
2. THE MINIMUM CONCRETE ULTIMATE STRENGTH (CUBE 0.15x0.15x0.15) AT 28 DAYS SHALL BE 30 MPa (306 KG/CM^2)
3. REINFORCING STEEL AS FOLLOWS:
   3.1 TIS 20 GRADE SR24 FOR ROUND BAR.
   3.2 TIS 24 GRADE SD40 DEFORM BAR.
4. ALL CONNECTION BOLTS SHALL CONFORM TO ASTM A325 AND ANCHOR BOLTS SHALL CONFORM TO ASTM A307.
5. ANCHOR BOLTS ARE AS FOLLOWS:
   5.1 M36 FOR 20M. AND 25M. HIGH MAST POLES.
   5.2 M42 FOR 30M. HIGH MAST POLE.
6. ALL DETAILS ARE GUIDED ONLY. THE CONTRACTOR SHALL SUBMIT THE DRAWING INCLUDING THE CALCULATION SHEETS TO THE AUTHORIZED ENGINEER FOR APPROVAL PRIOR TO CONSTRUCTION.
7. PILE SHALL BE SQUARE SECTION CONFORM TO TIS 395 OR TIS 396 AND DOWEL BARS SHALL BE FULL LENGTH OF PILE. THE MINIMUM PILE LENGTH AND FINAL PILE TIP ELEVATION SHALL BE APPROVED BY THE FOUNDATION ENGINEER.

REMARKS :

D = PILE WIDTH
* L = PILE LENGTH
** A SAFETY FACTOR OF 2.0 MUST BE APPLIED TO CALCULATE THE ULTIMATE PILE RESISTANCE.

REF.	REVISION	SIGNATURE	DATE

KINGDOM OF THAILAND
MINISTRY OF TRANSPORT
DEPARTMENT OF HIGHWAYS

STANDARD DRAWING
ROADWAY LIGHTING
PILE FOUNDATION FOR HIGH MAST

DESIGNED : D.O.H. & CONSULTANTS | CHECKED : BUREAU OF LOCATION & DESIGN | DATE : OCT 2015
SUBMITTED : (DIRECTOR OF LOCATION & DESIGN BUREAU) | SCALE : AS SHOWN
APPROVED : (FOR DIRECTOR GENERAL) | DWG NO. EE-108
SHEET NO. 189

D:\std dwg 2015\EE-108(REV00)

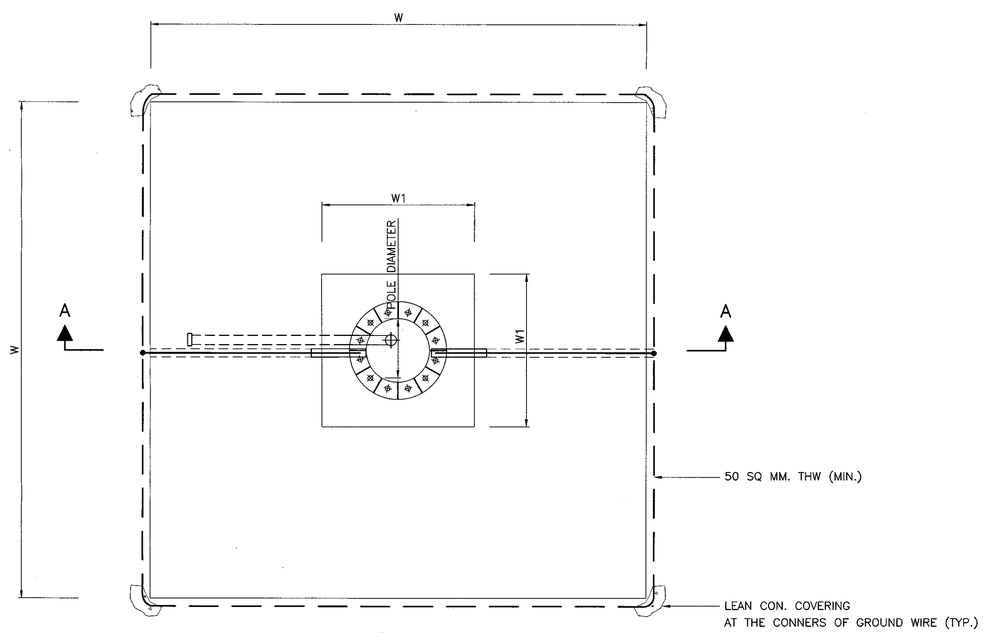

PLAN

NOT TO SCALE

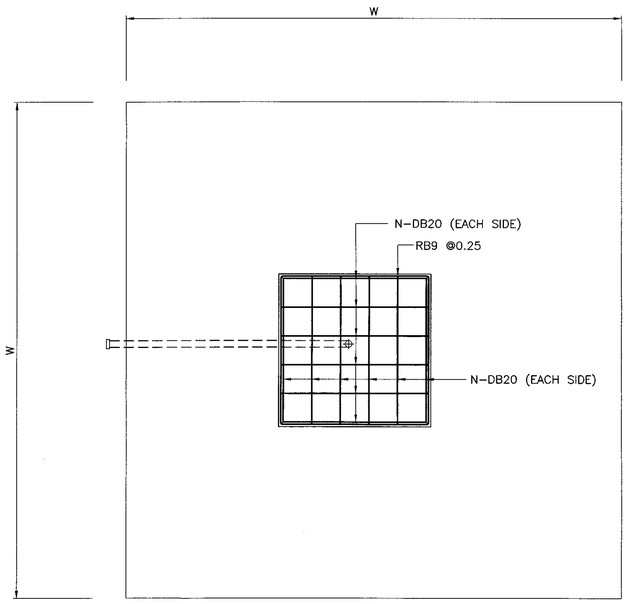

SECTION B – B

NOT TO SCALE

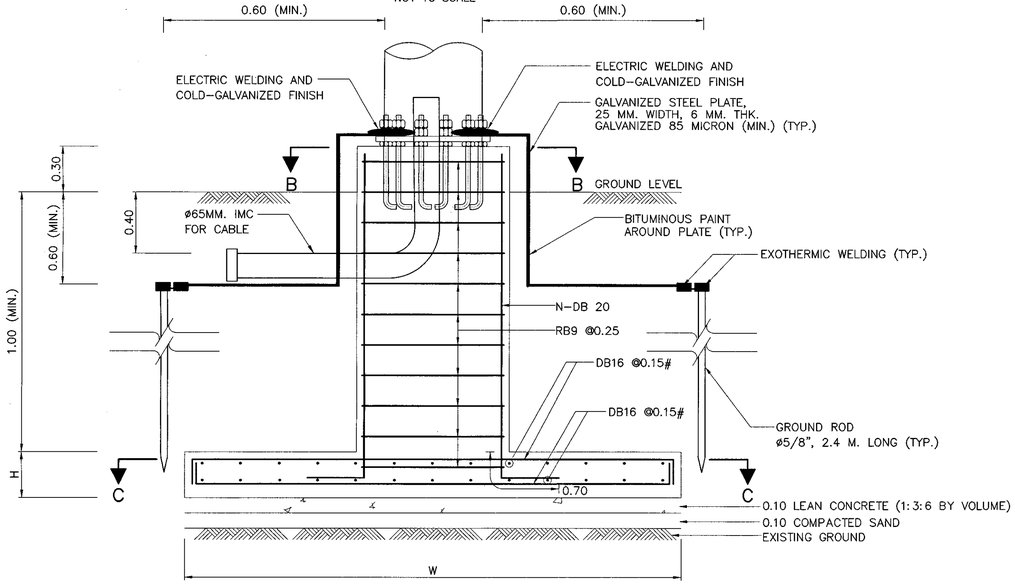

SECTION A – A

NOT TO SCALE

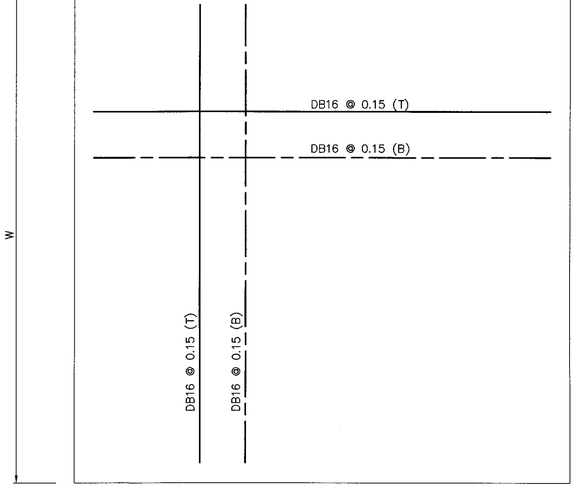

SECTION C – C

NOT TO SCALE

TABLE OF DIMENSION

POLE HEIGHT (M.)	DIMENSION (M.)			NO. OF REINFORCEMENT, N
	W	W1	H	
20	3.50	0.80	0.45	6
25	4.00	0.90	0.50	7
30	4.50	1.00	0.60	8

NOTES :

1. ALL DIMENSION SHOWN ARE IN METERS UNLESS OTHERWISE INDICATED.
2. THE MINIMUM CONCRETE ULTIMATE STRENGTH (CUBE 0.15x0.15x0.15) AT 28 DAYS SHALL BE 30 MPa (306 KG/CM^2)
3. REINFORCING STEEL AS FOLLOWS:
   3.1 TIS 20 GRADE SR24 FOR ROUND BAR.
   3.2 TIS 24 GRADE SD40 DEFORM BAR.
4. ALL CONNECTION BOLTS SHALL CONFORM TO ASTM A325 AND ANCHOR BOLTS SHALL CONFORM TO ASTM A307.
5. ANCHOR BOLTS ARE AS FOLLOWS:
   5.1 M36 FOR 20M. AND 25M. HIGH MAST POLES.
   5.2 M42 FOR 30M. HIGH MAST POLE.
6. ALL DETAILS ARE GUIDED ONLY. THE CONTRACTOR SHALL SUBMIT THE DRAWING INCLUDING THE CALCULATION SHEETS TO THE AUTHORIZED ENGINEER FOR APPROVAL PRIOR TO CONSTRUCTION.
7. SPREAD FOUNDATION MAY BE USED WHEN ONLY BEARING CAPACITY OF EXISTING SOIL IS OVER 100 KN/M^2(10 TON/M^2)

REF.	REVISION	SIGNATURE	DATE

KINGDOM OF THAILAND

MINISTRY OF TRANSPORT

DEPARTMENT OF HIGHWAYS

STANDARD DRAWING

ROADWAY LIGHTING

SPREAD FOUNDATION FOR HIGH MAST

DESIGNED : D.O.H. & CONSULTANTS	**CHECKED :** BUREAU OF LOCATION & DESIGN	**DATE :** OCT 2015
SUBMITTED : (DIRECTOR OF LOCATION & DESIGN BUREAU)		**SCALE :** AS SHOWN
		DWG NO. EE–109
APPROVED : (FOR DIRECTOR GENERAL)		**SHEET NO.** 190

D:\std dwg 2015\EE-109(REV00)

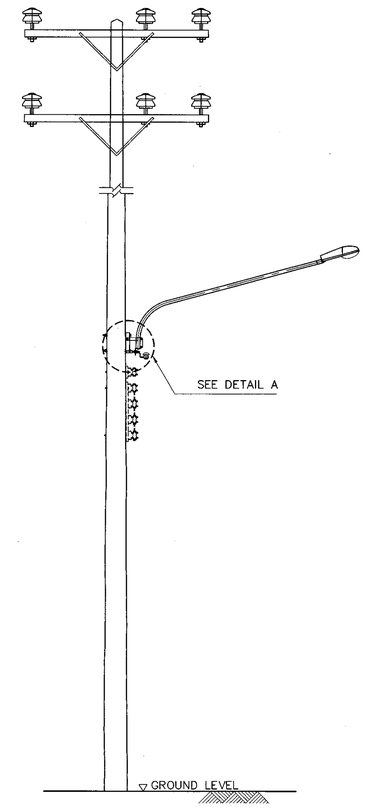

12–22 M. CONCRETE POLE

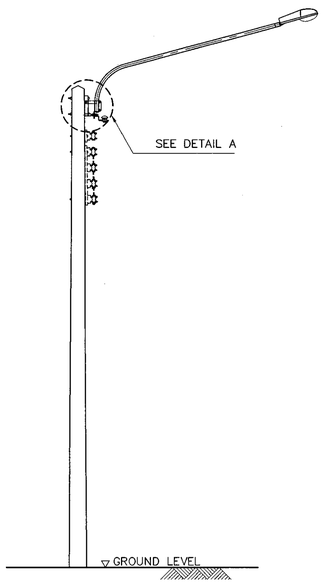

8–10.5 M. CONCRETE POLE

LIGHT INSTALLATION DETAILS

NOT TO SCALE

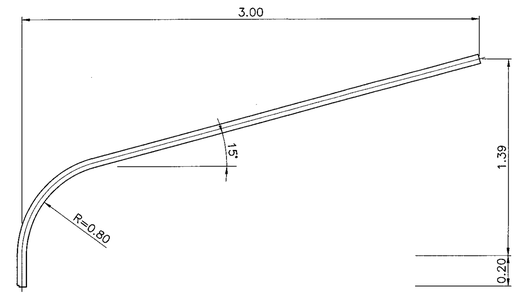

TYPE A

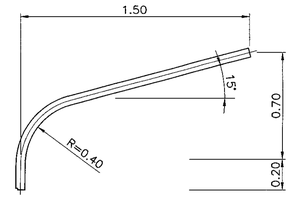

TYPE D

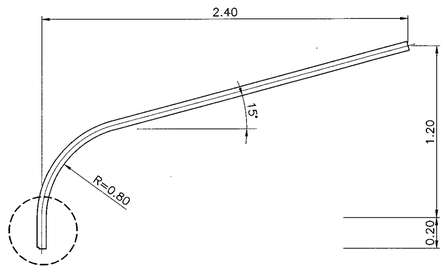

TYPE B

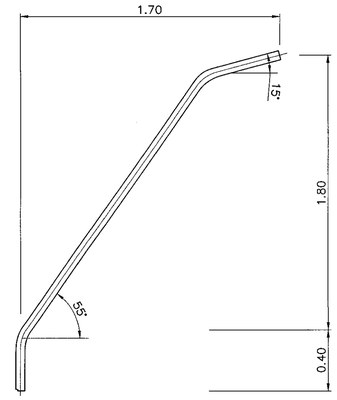

TYPE E

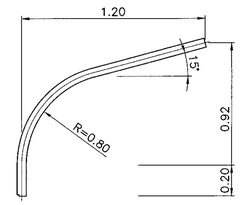

TYPE C

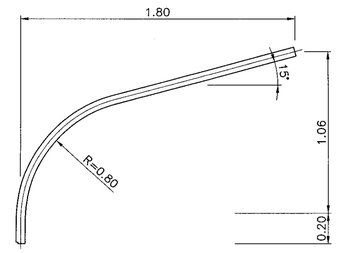

TYPE F

UPSWEEP PIPE BRACKET DETAILS

SCALE 1:20

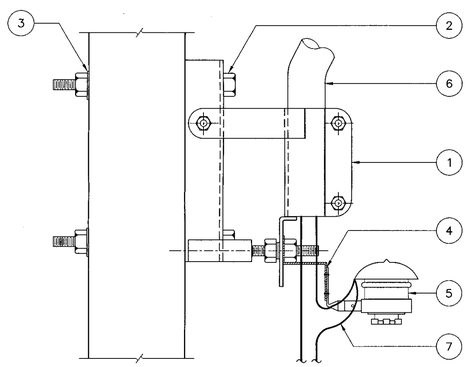

DETAIL A

NOT TO SCALE

NO.	MATERIAL
1	BRACKET
2	MACHINE BOLT 5/8"x12"
3	SQUARE WASHER 5/8"
4	BRACKET, EXTENSION FOR OUTDOOR FUSE
5	OUTDOOR FUSE ASSEMBLY, 25 A
6	UPSWEEP PIPE BRACKET PIPE, SIZE AND LENGTH AS REQUIRED
7	CONDUCTOR, CU. PVC INSULATED TYPE, 2.5 MM^2

NOTES :

1. ALL DIMENSIONS ARE IN METERS UNLESS OTHERWISE INDICATED.
2. THE UPSWEEP PIPE BRACKET DETAILS AS SHOWN ARE THE GUIDE ONLY (FROM MEA'S DRAWINGS), THIS DETAILS CAN BE OTHERWISE SPECIFIED BY THE DESIGN ENGINEER.
3. THE LOCATION OF LT. DISTRIBUTION AND CONTROL WIRE SHALL BE CONFORMED TO MEA/PEA STANDARD.
4. AFTER FABRICATION, THE PIPE BRACKET SHALL BE GALVANIZED BY HOT–DIP PROCESS.
5. THE EQUIPMENT, TRANSPORTATION, MAINTENANCE, INSTALLATION AND ETC., SHALL BE CONFORMED TO THE DOH'S GENERAL SPECIFICATION AND STANDARD OF STREET LIGHTING AND SPECIAL PROVISION (IF ANY).
6. IN GENERALLY, THE ILLUMINANCE/LUMINANCE, UNIFORMITY RATIO AND OTHER VALUES AS SPECIFIED IN DOH'S SPECIFICATION AND SPECIAL PROVISION (IF ANY) SHALL BE CONFORMED. EXCEPT THE LIMITATION OF THE SPACING OF PROPOSED POLES TO BE MOUNTED WITH LIGHT, THEY ARE THE ENTIRE DECISION OF THE DESIGN ENGINEER.

REF.	REVISION	SIGNATURE	DATE

KINGDOM OF THAILAND

MINISTRY OF TRANSPORT

DEPARTMENT OF HIGHWAYS

STANDARD DRAWING

ROADWAY LIGHTING

LIGHT INSTALLATION ON EXISTING MEA OR PEA POLE

DESIGNED : D.O.H. & CONSULTANTS	CHECKED : BUREAU OF LOCATION & DESIGN	DATE : OCT 2015
SUBMITTED : (DIRECTOR OF LOCATION & DESIGN BUREAU)		SCALE : AS SHOWN
APPROVED : (FOR DIRECTOR GENERAL)		DWG NO. EE–110
		SHEET NO. 191

D:\std dwg 2015\EE-110(REV00)

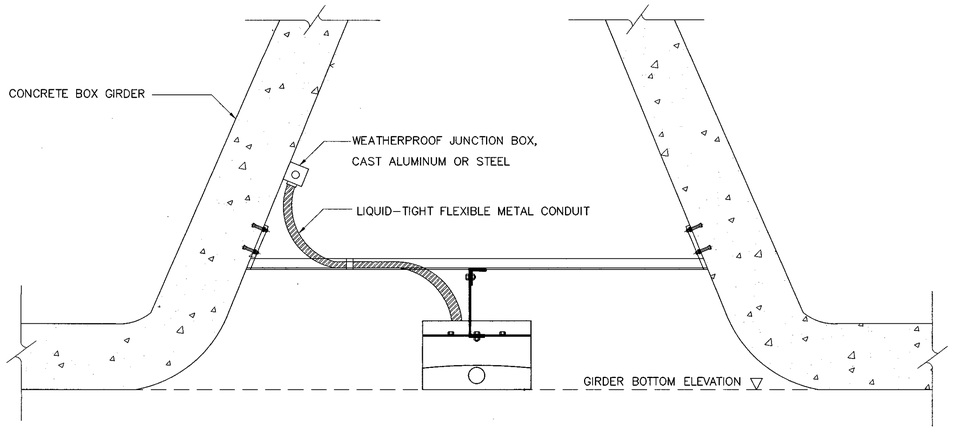

TYPE 1: BETWEEN CONCRETE BOX GIRDERS

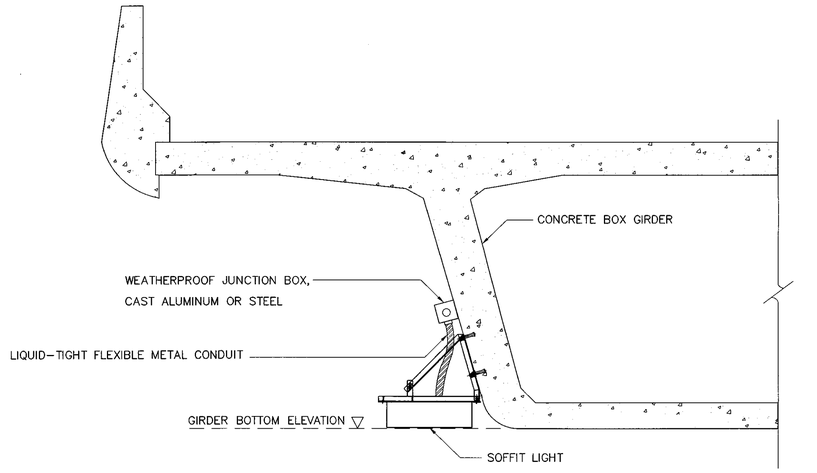

TYPE 2: SIDE OF CONCRETE BOX GIRDER

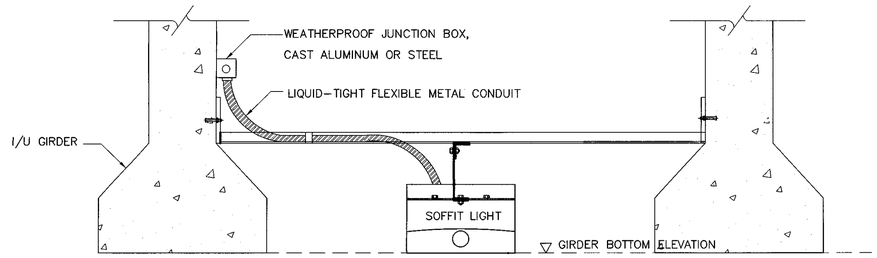

TYPE 3: BETWEEN I/U GIRDERS

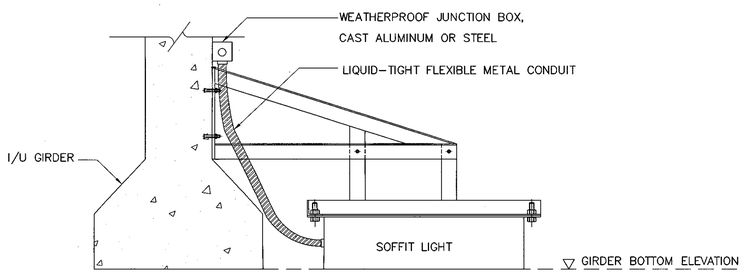

TYPE 4: SIDE OF I/U GIRDERS

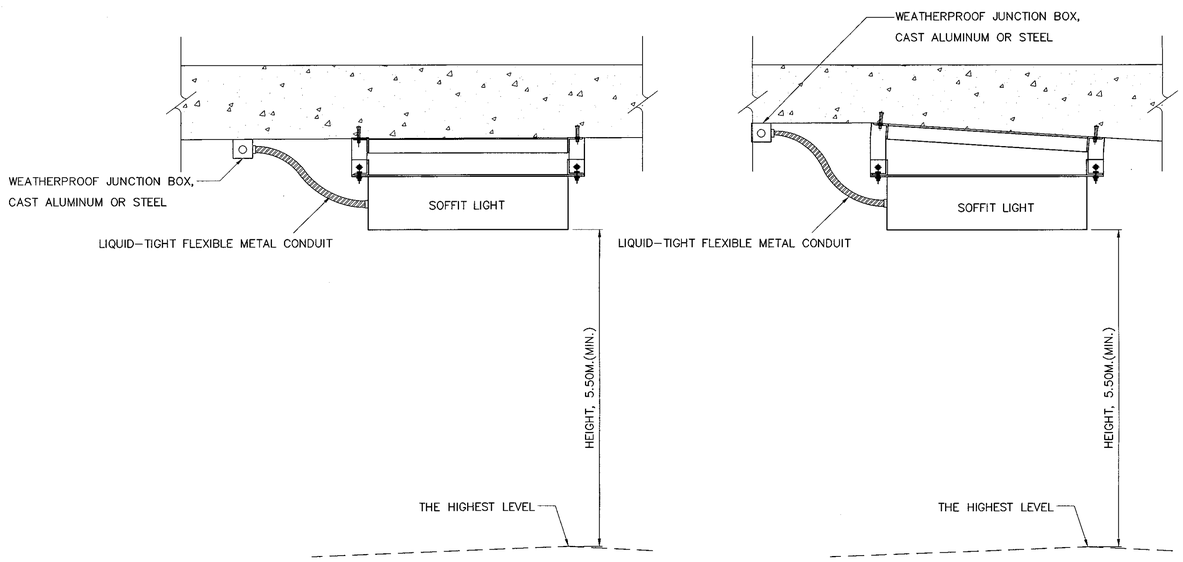

TYPE 5: UNDER SLAB

NOTES :

1. ALL DIMENSIONS ARE IN METERS UNLESS OTHERWISE INDICATED.
2. THE SHAPE OF SOFFIT LIGHT AND INSTALLATION DETAILS INCLUDING SUPPORT AS SHOWN ARE THE GUIDE ONLY. THE CONTRACTOR SHALL SUBMIT THEM TO DOH FOR APPROVAL PRIOR TO INSTALLATION OR AS SPECIFIED ON THE DRAWING.
3. THE EQUIPMENT, TRANSPORTATION, MAINTENANCE, INSTALLATION AND ETC., SHALL BE CONFORMED TO THE DOH'S GENERAL SPECIFICATION AND STANDARD OF STREET LIGHTING AND SPECIAL PROVISION (IF ANY).

REF.	REVISION	SIGNATURE	DATE

KINGDOM OF THAILAND

MINISTRY OF TRANSPORT
DEPARTMENT OF HIGHWAYS

STANDARD DRAWING

ROADWAY LIGHTING
SOFFIT LIGHT INSTALLATION

DESIGNED : D.O.H. & CONSULTANTS	**CHECKED :** BUREAU OF LOCATION & DESIGN	**DATE :** OCT 2015
SUBMITTED : (DIRECTOR OF LOCATION & DESIGN BUREAU)		**SCALE :** AS SHOWN
APPROVED : (FOR DIRECTOR GENERAL)		**DWG NO.** EE–111
		SHEET NO. 192

D:\std dwg 2015\EE-111(REV00)

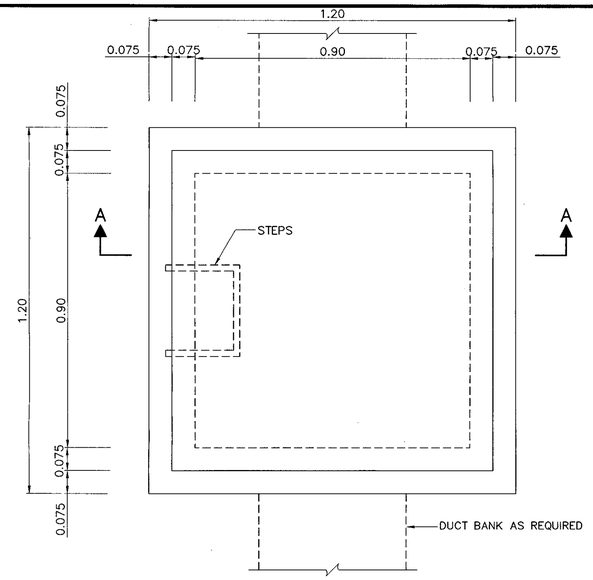

PLAN

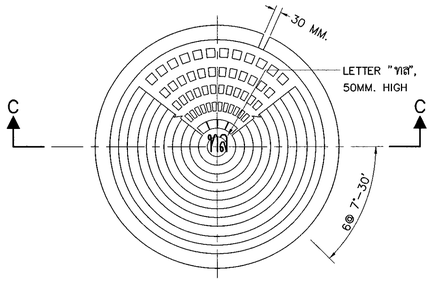

PLAN – COVER (CAST IRON)

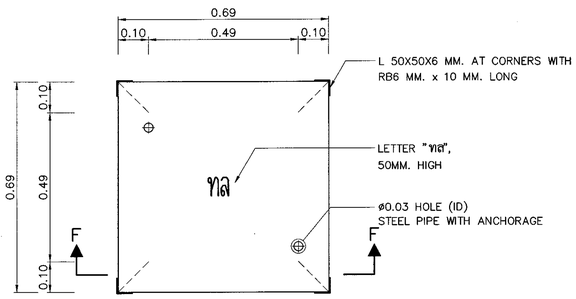

PLAN – COVER (CONCRETE)

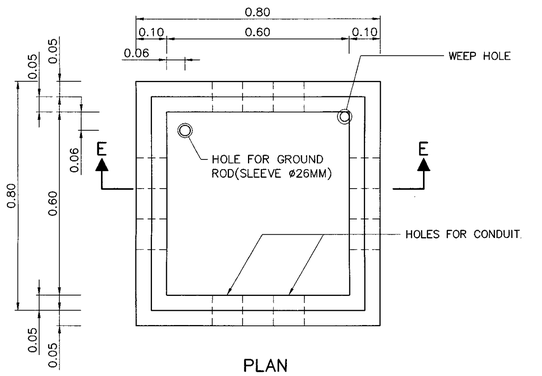

PLAN

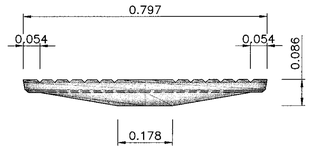

SECTION C – C
SCALE 1 : 10

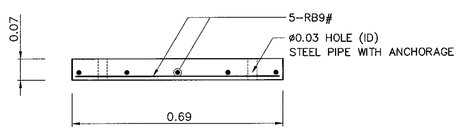

SECTION F – F

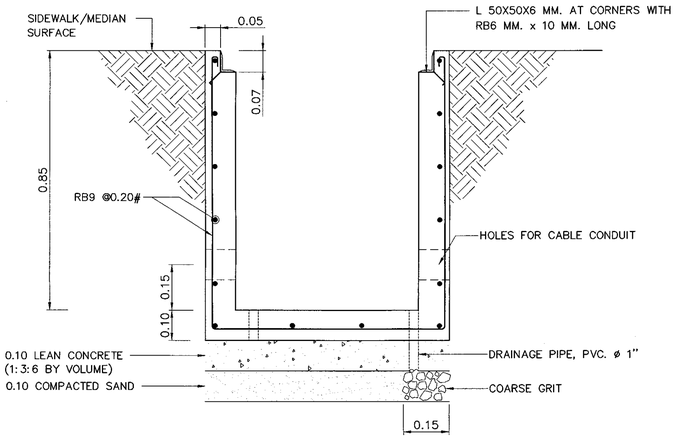

SECTION E – E

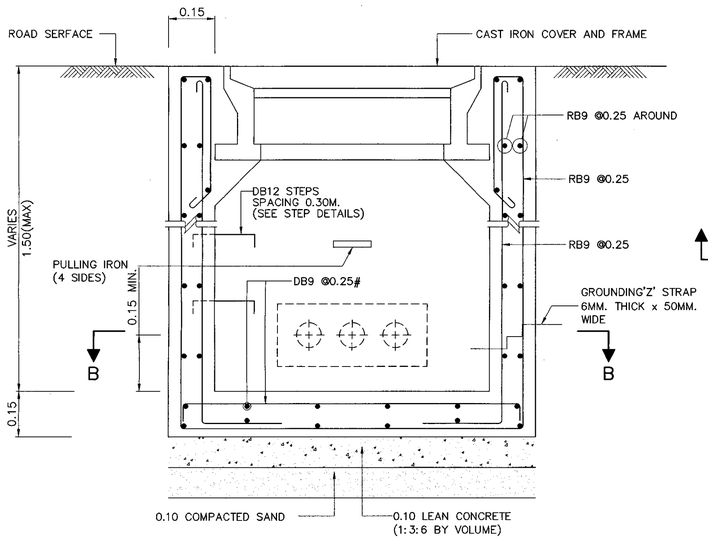

SECTION A – A

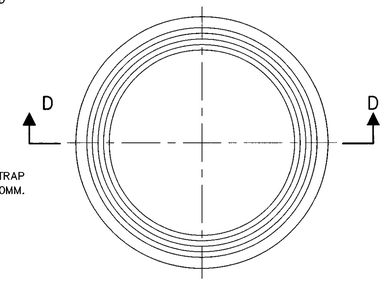

PLAN – COVER FRAME

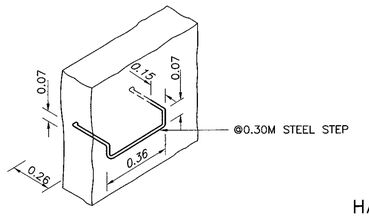

STEP DETAILS

HANDHOLE TYPE B
SCALE 1 : 10

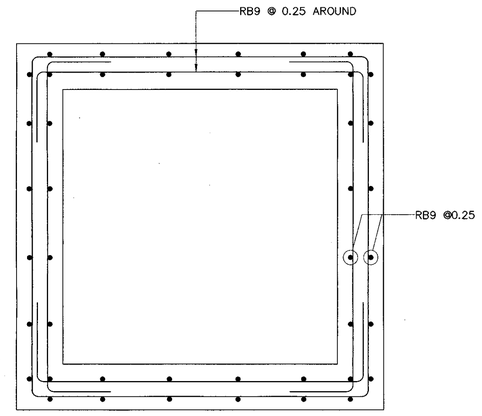

SECTION B – B

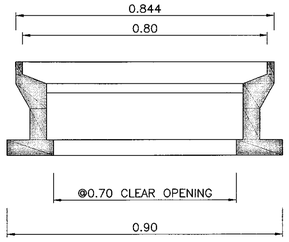

SECTION D – D

HANDHOLE TYPE A
SCALE 1 : 10

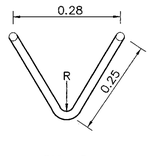

TOP VIEW
(R=30±5mm.)

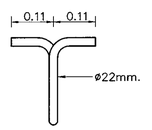

SIDE VIEW

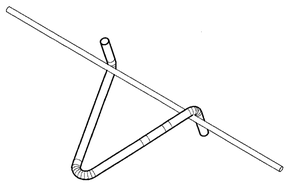

ISOMETRIC VIEW

PULLING IRON
NOT TO SCALE

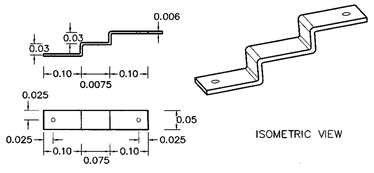

ISOMETRIC VIEW

GROUNDING 'Z' STRAP
NOT TO SCALE

NOTES :

1. ALL DIMENSIONS ARE IN METERS UNLESS OTHERWISE INDICATED.
2. CONCRETE MINIMUM ULTIMATE STRENGTH (CUBE 0.15x0.15x0.15) AT 28 DAYS SHALL BE 20 MPa (204 KG/CM^2)
3. REINFORCING STEEL AS FOLLOWS:
   3.1 TIS.20, GRADE SR24 FOR ROUND BAR.
   3.2 TIS.24, GRADE SR40 FOR REBAR.
4. THE RECOMMENDED PROCEDURE TO BE EFFECTIVE IN PREVENTING CABLE THEFT IS 3 STEPS AS FOLLOWS.
   4.1 FILL THE SAND UNTIL ALMOST FULL AREA OF HANDHOLE BY REMAINING THE SPACE OF 5 CM. DEPTH BELOW THE TOP.
   4.2 POUR CONCRETE UNTIL FULL AS THE LAYER OF 5 CM. THK. CONCRETE.
   4.3 AFTER CONCRETE HAS SET SUFFICIENTLY THEN CLOSE THE COVER.

REF.	REVISION	SIGNATURE	DATE

KINGDOM OF THAILAND

MINISTRY OF TRANSPORT
DEPARTMENT OF HIGHWAYS

STANDARD DRAWING
ROADWAY LIGHTING
HANDHOLE FOR ROADWAY LIGHTING

DESIGNED : D.O.H. & CONSULTANTS	**CHECKED :** BUREAU OF LOCATION & DESIGN	**DATE :** OCT 2015
SUBMITTED : (DIRECTOR OF LOCATION & DESIGN BUREAU)		**SCALE :** AS SHOWN
APPROVED : (FOR DIRECTOR GENERAL)		**DWG NO.** EE–112
		SHEET NO. 193

D:\std dwg 2015\EE-112(หัวบ่อ).dwg

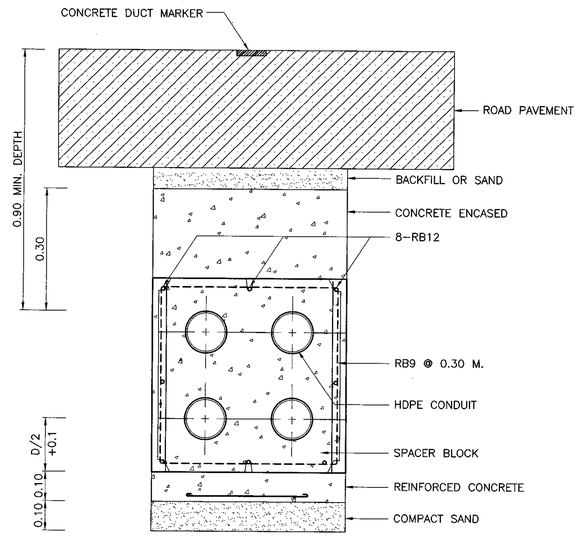

TYPICAL CROSS ROAD 2x2 DUCT BANK INSTALLATION
SCALE 1 : 10

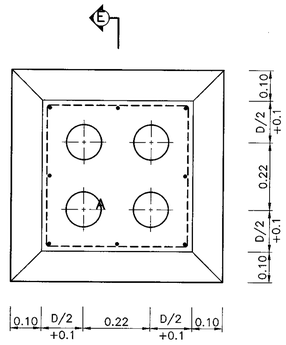

DUCT WINDOW
SCALE 1 : 10

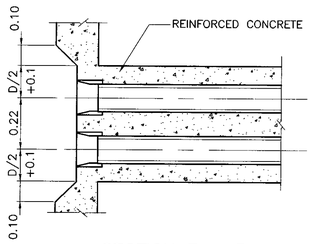

SECTION E – E
SCALE NONE

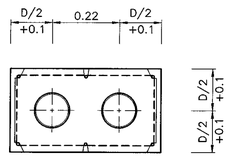

2 DUCT (2x1)

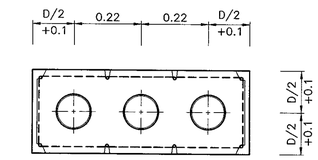

3 DUCT (3x1)

TYPICAL DUCT BANK SECTION
SCALE 1 : 10

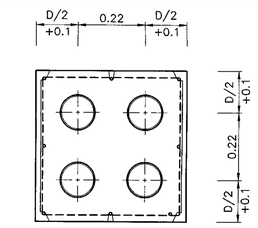

4 DUCT (2x2)

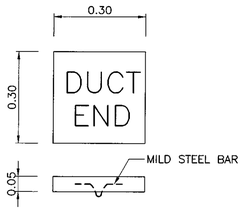

DUCT MARKER DETAIL
SCALE 1 : 10

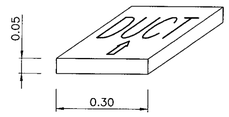

TYPICAL DUCT MARKER
SCALE 1 : 10

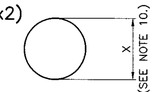

SECTION D – D

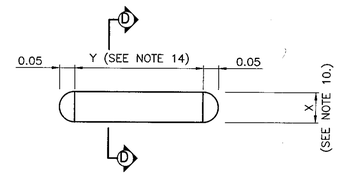

DUMMY FOR TESTING DUCT BANK
SCALE NONE

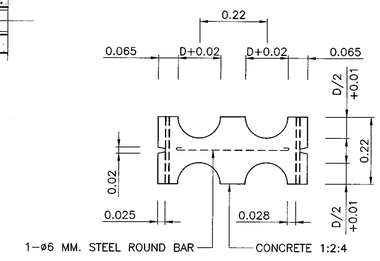

MIDDLE

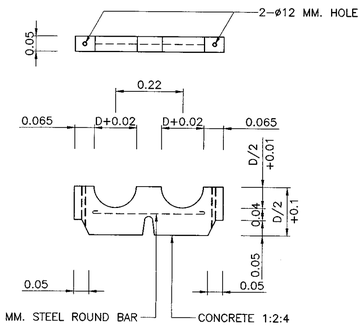

TOP AND BOTTOM

SPACER BLOCK
SCALE 1 : 10

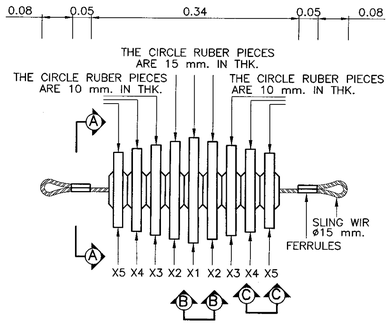

FLEXIBLE CLEANER
SCALE NONE

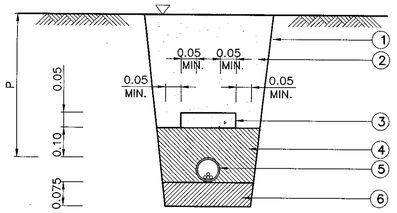

1. SLOPE (AS SUITABLE IN PRACTICE)
2. SOIL BACKFILL
3. CONCRETE SLAB, SEE NOTE 2
4. SAND BACKFILL
5. HDPE OR RSC CONDUIT
6. COMPACT SAND

ROAD SURFACE OR GROUND OR SIDE WALK

TYPICAL DETAIL: CABLE LAID IN CONDUIT IN THE GROUND
SCALE NONE

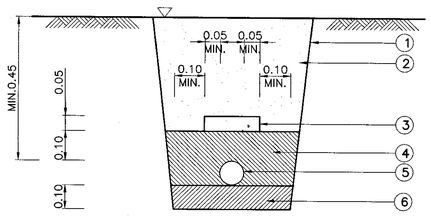

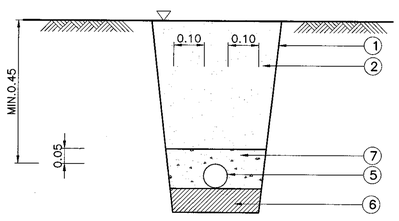

* SEE NOTE 5

1. SLOPE (AS SUITABLE IN PRACTICE)
2. SOIL BACKFILL
3. CONCRETE SLAB, SEE NOTE 2
4. SAND BACKFILL
5. NYY OR CV CABLE
6. COMPACT SAND
7. LEAN CONCRETE

GROUND OR SIDE WALK

TYPICAL DETAIL: DIRECT BURIAL
SCALE NONE

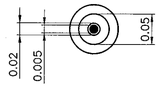

SECTION A – A

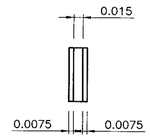

SECTION B – B

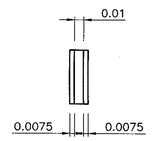

SECTION C – C

NOTES

1. ALL DIMENSIONS ARE IN METER UNLESS OTHERWISE INDICATED.
2. FOR MORE THAN ONE CIRCUIT (SYSTEM), CONCRETE SLAB CAN BE USED MORE THAN 1 UNIT AS APPROPRIATE, CLEARANCE SEPERATION BETWEEN EDGE OF CONCRETE SLAB SHALL BE MAINTAINED AT A MAXIMUM OF 15 CM.
3. FOR RSC CONDUIT, P = 0.15 AND 0.60 METER(MIN.) FOR UNDERGROUND OR SIDEWALK AND ROAD SURFACE RESPECTIVELY.
4. FOR HDPE CONDUIT, P = 0.30 AND 0.60 METER(MIN.) FOR UNDERGROUND OR SIDEWALK AND ROAD SURFACE RESPECTIVELY.
5. FOR THE RISK AREA OF CABLE THEFT, THE LEAN CONCRETE WITH 5 CM. THICK COVERING THROUGHOUT THE UNDERGROUND CABLE SHOULD BE APPLIED.
6. THE DISTANCE BETWEEN SPACER BLOCK MUST BE 2.00 M. (CENTER TO CENTER) AND 0.6 M. FOR COUPLING SECTIONS.
7. "D" MEANS THE OUTSIDE DIAMETER OF CONDUIT.
8. THE MINIMUM SLOPE OF DUCT BANK IS 1:400.
9. THE CIRCLE RUBBER PIECE SHALL BE MADE OF HARD RUBBER AND SHALL NOT DAMAGE THE CONDUIT.
10. DIAMETER X1, X2, X3, X4 & X5
    - 10.1 DIAMETER X1 IS INNER-DIAMETER OF CONDUIT MINUS 5 MM.
    - 10.2 DIAMETER X2 IS INNER-DIAMETER OF CONDUIT MINUS 10 MM.
    - 10.3 DIAMETER X3 IS INNER-DIAMETER OF CONDUIT MINUS 15 MM.
    - 10.4 DIAMETER X4 IS INNER-DIAMETER OF CONDUIT MINUS 20 MM.
    - 10.5 DIAMETER X5 IS INNER-DIAMETER OF CONDUIT MINUS 25 MM.
11. THE DUMMY SHALL BE USED FOR UNDERGROUND DUCT BANK SYSTEM.
12. THE DUMMY SHALL BE MADE OF HARD WOOD.
13. OUTSIDE DIAMETER OF DUMMY IS INSIDE DIAMETER OF CONDUIT (NORMAL) MINUS 12.7 mm.
14. TESTING DUCT BANK SHALL USE THE DUMMY 500 mm. IN LENGTH, BUT TESTING ELBOW AT RISER POLE SHALL USE THE DUMMY 200 mm.

REF.	REVISION	SIGNATURE	DATE

KINGDOM OF THAILAND
MINISTRY OF TRANSPORT
DEPARTMENT OF HIGHWAYS

STANDARD DRAWING
ROADWAY LIGHTING
UNDERGROUND CABLE, CONDUIT AND DUCT BANK DETAILS

DESIGNED : D.O.H. & CONSULTANTS	CHECKED : BUREAU OF LOCATION & DESIGN	DATE : OCT 2015
SUBMITTED : (DIRECTOR OF LOCATION & DESIGN BUREAU)		SCALE : AS SHOWN
APPROVED : (FOR DIRECTOR GENERAL)		DWG NO. EE-113
		SHEET NO. 194

D:\std dwg 2015\EE-113(REV00)

SECTION 8) TRAFFIC SIGNAL

SYMBOLS	DESCRIPTION	FIGURE
	3–ASPECT SIGNAL HEAD, RED–AMBER–GREEN, VERTICAL ARRANGEMENT INSTALL WITH NORMAL POLE.	
S	3–ASPECT SIGNAL HEAD, RED–AMBER–GREEN STRAIGHT ARROW, VERTICAL ARRANGEMENT INSTALL WITH NORMAL POLE.	
R	3–ASPECT SIGNAL HEAD, RED–AMBER–GREEN RIGHT ARROW, VERTICAL ARRANGEMENT INSTALL WITH NORMAL POLE.	
L	3–ASPECT SIGNAL HEAD, RED–AMBER–GREEN LEFT ARROW, VERTICAL ARRANGEMENT INSTALL WITH NORMAL POLE.	
S R	4–ASPECT SIGNAL HEAD, RED–AMBER–GREEN STRAIGHT ARROW, GREEN RIGHT ARROW, L–TYPE OR VERTICAL ARRANGEMENT INSTALL WITH NORMAL POLE.	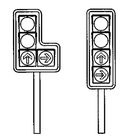
L S	4–ASPECT SIGNAL HEAD, RED–AMBER–GREEN STRAIGHT ARROW–GREEN LEFT ARROW, L–TYPE OR VERTICAL ARRANGEMENT INSTALL WITH NORMAL POLE.	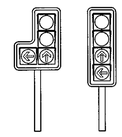
L R	4–ASPECT SIGNAL HEAD, RED–AMBER–GREEN RIGHT ARROW–GREEN LEFT ARROW, L–TYPE OR VERTICAL ARRANGEMENT INSTALL WITH NORMAL POLE.	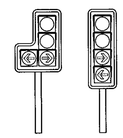
SS RR	DOUBLE 3–ASPECT SIGNAL HEAD, RED STRAIGHT ARROW–AMBER–GREEN STRAIGHT ARROW, ARROW, RED RIGHT ARROW–AMBER–GREEN RIGHT ARROW, VERTICAL ARRANGEMENT IN STALL WITH NORMAL POLE.	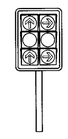
S	ASPECT SIGNAL HEAD, GREEN STRAIGHT ARROW	
R	ASPECT SIGNAL HEAD, GREEN RIGHT ARROW	
L	ASPECT SIGNAL HEAD, GREEN LEFT ARROW	
SS	ASPECT SIGNAL HEAD, RED AND GREEN STRAIGHT ARROW	
RR	ASPECT SIGNAL HEAD, RED AND GREEN RIGHT ARROW	

SYMBOLS	DESCRIPTION	FIGURE
	3–ASPECT SIGNAL HEAD, RED–AMBER–GREEN, VERTICAL ARRANGEMENT INSTALL WITH MAST–ARM POLE (RIGHT OUTREACH).	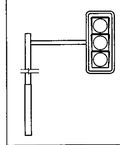
S R	4–ASPECT SIGNAL HEAD, RED–AMBER–GREEN STRAIGHT ARROW, GREEN RIGHT ARROW, L–TYPE INSTALL WITH MAST–ARM POLE (RIGHT OUTREACH).	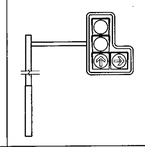
L R	4–ASPECT SIGNAL HEAD, RED–AMBER–GREEN RIGHT ARROW–GREEN LEFT ARROW, L–TYPE INSTALL WITH MAST–ARM POLE (RIGHT OUTREACH).	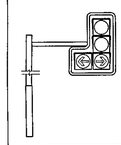
SS RR	3–ASPECT SIGNAL HEAD, RED–STRAIGHT ARROW–AMBER–GREEN STRAIGHT ARROW AND 3–ASPECT SIGNAL HEAD, RED–AMBER–GREEN RIGHT ARROW, VERTICAL ARRANGEMENT INSTALL WITH MAST–ARM POLE (RIGHT OUTREACH).	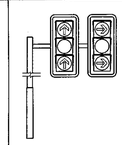
	3–ASPECT SIGNAL HEAD, RED–AMBER–GREEN, VERTICAL ARRANGEMENT INSTALL WITH MAST–ARM POLE (LEFT OUTREACH).	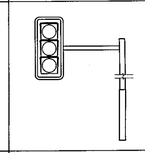
S R	4–ASPECT SIGNAL HEAD, RED–AMBER–GREEN STRAIGHT ARROW, GREEN RIGHT ARROW, L–TYPE INSTALL WITH MAST–ARM POLE (LEFT OUTREACH).	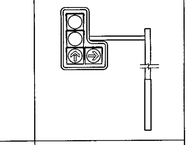
L R	4–ASPECT SIGNAL HEAD, RED–AMBER–GREEN RIGHT ARROW–GREEN LEFT ARROW, L–TYPE INSTALL WITH MAST–ARM POLE (LEFT OUTREACH).	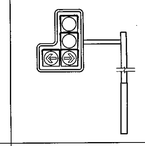
SS RR	3–ASPECT SIGNAL HEAD, RED STRAIGHT ARROW–AMBER–GREEN STRAIGHT ARROW AND 3–ASPECT SIGNAL HEAD, RED RIGHT ARROW–AMBER–GREEN RIGHT ARROW, VERTICAL ARRANGEMENT INSTALL WITH MAST–ARM POLE (LEFT OUTREACH).	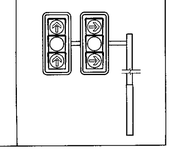
	PRIMARY SIGNAL	
	SECONDARY SIGNAL	

REF.	REVISION	SIGNATURE	DATE

KINGDOM OF THAILAND

MINISTRY OF TRANSPORT
DEPARTMENT OF HIGHWAYS

STANDARD DRAWING

ROAD TRAFFIC SIGNALS
TRAFFIC SIGNAL SYMBOLS

DESIGNED : D.O.H. & CONSULTANTS	CHECKED : BUREAU OF LOCATION & DESIGN	DATE : OCT 2015
SUBMITTED : (DIRECTOR OF LOCATION & DESIGN BUREAU)		SCALE : AS SHOWN
APPROVED : (FOR DIRECTOR GENERAL)		DWG NO. TF–101
		SHEET NO. 195

TRAFFIC SIGNAL SYMBOLS

D:\std dwg 2015\TF-101(REV00)

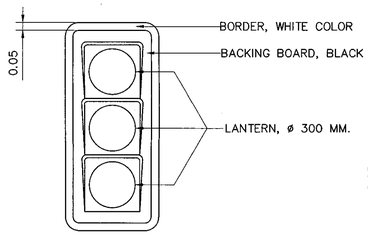

RED–AMBER–GREEN

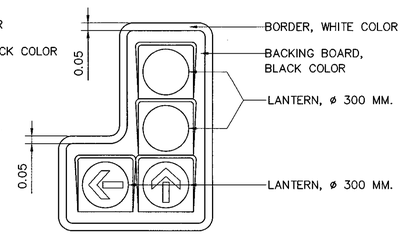

RED–AMBER–GREEN STRAIGHT ARROW–GREEN LEFT ARROW

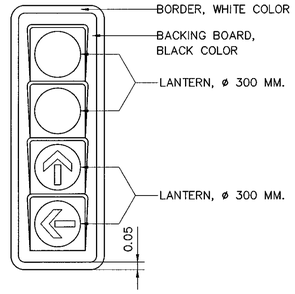

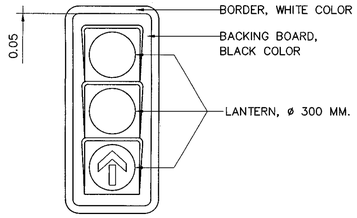

RED–AMBER–GREEN STRAIGHT ARROW

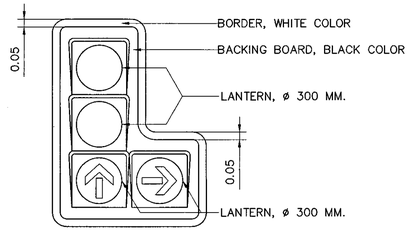

RED–AMBER–GREEN STRAIGHT ARROW–GREEN RIGHT ARROW

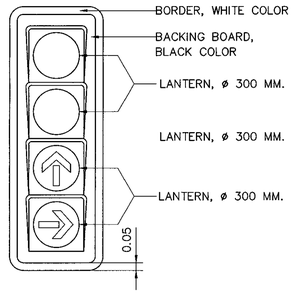

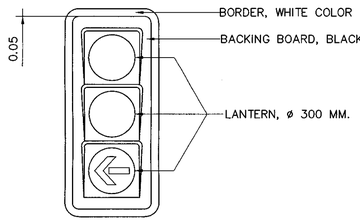

RED–AMBER–GREEN LEFT ARROW

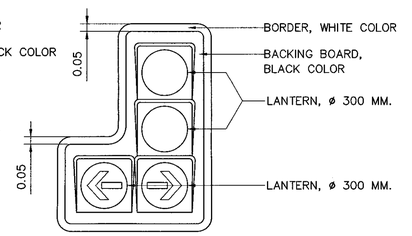

RED–AMBER–GREEN RIGHT ARROW–GREEN LEFT ARROW

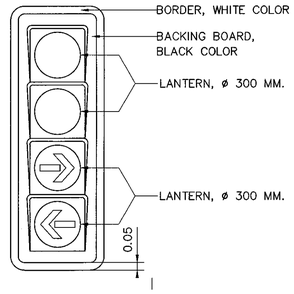

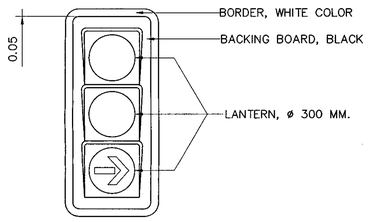

RED–AMBER–GREEN RIGHT ARROW

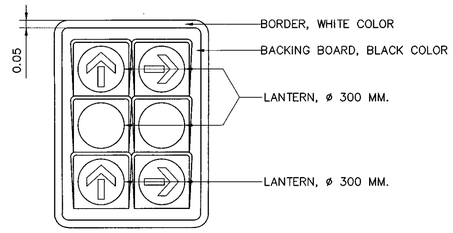

RED STRAIGHT ARROW–AMBER–GREEN STRAIGHT ARROW,
RED RIGHT ARROW–AMBER–GREEN RIGHT ARROW

SIGNAL HEAD

NOT TO SCALE

SPECIFICATION

1. THE HOUSING SHALL BE MADE FROM POLYCARBONATE, BLACK COLOR, UV RESISTANT, FLEXIBILITY, RIGIDITY, EASY TO OPEN AND CLOSE TO PROTECT THE CONTENTS FROM DUST AND HUMIDITY AS WELL AND CORROSION RESISTANT OF CLIMATIC CONDITION.
2. ALL SIGNAL HEADS SHALL BE OF VISOR, BLACK COLOR, REGIDLY UNDER NORMAL. OPERATION. THE VISOR SHALL BE SECURELY ATTACHED TO A SIGNAL HEAD.
3. LAMP SHALL BE HALOGEN OR LED.

3.1 HALAGEN

- LONG LIFE TUNGSTEN HALOGEN, 50 WATT 12 VOLT
- MADE FROM POLYCARBONATE, HEAT RESISTANT, NOT BREAKABLE
- CONSIST OF TRANSFORMER, 12 VOLT AND SUITABLY EQUIPPED WITH THE SIGNAL HEAD.

3.2 LED

- SHALL BE EQUIPPED WITH STANDARD SIGNAL HEAD WITHOUT ANY MODIFICATION.
- LED IN RED AND AMBER COLOR SHALL BE MADE FROM AlInGaP (ALUMINUM INDIUM GALLIUM PHOSPHIDE). LED IN GREEN COLOR SHALL BE MADE FROM InGaN (INDIUM GALLIUM NITRIDE) OR GaN (GALLIUM NITRIDE).
- THE WAVELENGTH AT TEMPERATURE, Ta = 25 °C IN NORMAL CURRENT FOR EACH LED COLOR SHALL BE AS FOLLOWS.

  RED 625 – 650 NANOMETER (nm)
  AMBER 585 – 597 NANOMETER (nm)
  GREEN 500 – 509 NANOMETER (nm)
- THE LED SIGNAL MODULE SHALL CONSIST OF A LENS MADE FROM POLYCARBONATE, UV RESISTANT, CLEAR COLOR, COLOR CONSISTENCY, REGIDITY AND CORROSION RESISTANT OF CLIMATIC CONDITION.
- THE LED SIGNAL MODULE SHALL BE IN RETROFIT MODULE, CAPABLE PROTECT THE CONTENTS FROM WATER, DUST, STEAM, HUMIDITY AND SOMETHING ACCESS INSIDE, IP65 MINIMUM (CONFORMED TO IEC STANDARD OR TIS. 513). THE BIDDER SHALL SUBMIT THE TEST CERTIFICATE FROM THE INTERNATIONAL INSTITUTION DECLARATION OR OTHER INSTITUTION IN THAILAND WITHIN 2 YEARS FROM BIDDING DATE.
- OPERATING TEMPERATURE: 0 °C TO +65 °C
- SHALL BE OF OVER VOLTAGE AND OVER CURRENT PROTECTION CIRCUIT.
- THE LUMINOUS INTENSITY SHALL CONFORM TO ITE STANDARD (INSTITUTE OF TRANSPORTATION ENGINEERS).
- THE POWER FACTOR SHALL NOT BE LESS THAN 0.9.
- THE LED LAMP HAS BEEN DESIGNED WHEN ANY LED MODULE/PACKAGE/DIE SHUT, THE OTHERS SHALL STILL LIGHT ON, TO AVOID THE CONFUSION OF THE MOTORIST.
- THE LED CHIP SHALL BE THE PRODUCT OF RELIABLE MANUFACTURER (I.E. CREE, PHILIP LUMILEDS, OSRAM, NICHIA OR EQUIVALENT) AND PROVIDE THE MANUFACTURER DECLARATION INCLUDING TEST CERTIFICATE.
- LIFETIME: > 80,000 HOURS (70% LUMEN MAINTENANCE), TEST AND PROJECT CONFORMED TO IES LM–80/TM–21 OR OTHER SPECIFIED ON THE DRAWING OR SPECIFICATION.
- HEAT DISSIPATION METHOD BY PASSIVE COOLING.
- THE LED SHALL BE OF TIS. CERTIFICATES FOR ALL STANDARD SPECIFICATIONS REGARDING PERFORMANCE AND SAFETY (IF ANY). ALL STANDARDS SHALL BE OF THE LATEST ISSUE.

PRINCIPLE OF TRAFFIC SIGNALS LOCATION

1. EACH APPROACH ROAD SHALL BE SERVED BY A MINIMUM OF TWO SIGNAL FACES I.E. PRIMARY SIGNAL AND SECONDARY SIGNAL.
2. THE PRIMARY SIGNAL WHICH WILL BE LOCATED NOT LESS THAN 1.0 METER BEYOND THE STOP LINE ON NEARSIDE OF THE ROAD BUT NOT OVER THE CROSSING APPROACH. BUT NOT OVER THE CROSSING APPROACH, NO PART OF ANY SIGNAL SHALL BE WITHIN 0.5 METER OF CURB LINE. FOR MORE THAN 3 LANES, THE ADDITIONAL SIGNAL MAY BE LOCATED ON THE MEDIAN NEARSIDE OF THE ROAD.
3. FOR THE MAST ARM POLE INSTALLATION, THE MINIMUM REQUIRED OVERHEAD CLEARANCE SHALL BE AT LEAST 5.50 METERS.
4. THE SECONDARY SIGNAL WHICH WILL BE ON THE DIAGONALLY OPPOSITE SIDE OF THE JUNCTION FACING THE APPROACH, BUT IN ANY CASE SHOULD NOT BE OUTSIDE AN ANGLE OF 20 EXTENDED FROM THE CENTER LINE OF THE APPROACH AT THE STOP LINE TO THE OFFSIDE. THE LOCATION RANGE 12.5–50.0 METER AS SHOWN ON FIG.–1. NO PART OF ANY SIGNAL SHALL BE WITHIN 0.5 METER OF CURB LINE.

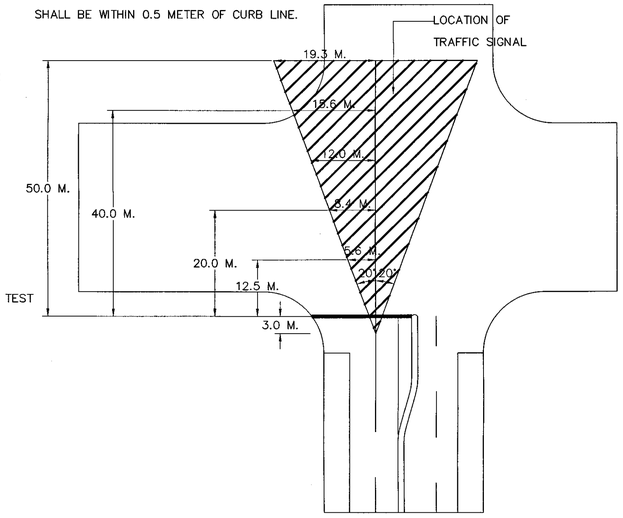

FIG.–1 LOCATION OF SECONDARY SIGNAL

5. TO AVOID THE CONFUSION OF LONG DISTANCE VISUAL, IT SHOULD NOT LOCATE THE BOTH PRIMARY SIGNAL AND SECONDARY SIGNAL AS MAST ARM POLE FOR ANY DIRECTION.
6. IN CASE OF LOCATING A SIGNAL NORMAL POLE MOUNTED L–TYPE SIGNAL HEAD ON THE NARROW MEDIAN WHICH ANY PART OF SIGNAL OBSTRUCT CAUSE A HAZARD TO USER, THE 4–ASPECT SIGNAL HEAD, VERTICAL ARRANGEMENT, SHOULD BE APPLIED.
7. THIS PRINCIPLE IS FOR GUIDE ONLY, THE NUMBER OF SIGNAL SHALL BE ON SITE CONDITION.
8. IN CASE OF THE LOCATION DISTANCE OF TRAFFIC SIGNAL LESS THAN THE MINIMUM VISIBILITY DISTANCE, THE WARNING SIGN OF TRAFFIC SIGNALS AHEAD SHOULD BE INSTALLED.

TABLE 1: MINIMUM VISIBILITY DISTANCE

85TH PERCENTILE SPEED (KM./H.)	MIN. VISIBILITY DISTANCE (M.)
30	50
40	65
50	85
60	110
70	140
80	165
90	195
100	230

KINGDOM OF THAILAND

MINISTRY OF TRANSPORT
DEPARTMENT OF HIGHWAYS

STANDARD DRAWING

ROAD TRAFFIC SIGNALS

TRAFFIC SIGNAL HEAD DETAILS

DESIGNED : D.O.H. & CONSULTANTS	CHECKED : BUREAU OF LOCATION & DESIGN		DATE : OCT 2015
SUBMITTED : (DIRECTOR OF LOCATION & DESIGN BUREAU)			SCALE : AS SHOWN
APPROVED : (FOR DIRECTOR GENERAL)			DWG NO. TF–102
			SHEET NO. 196

REF.	REVISION	SIGNATURE	DATE

D:\std dwg 2015\TF-102(REV00)

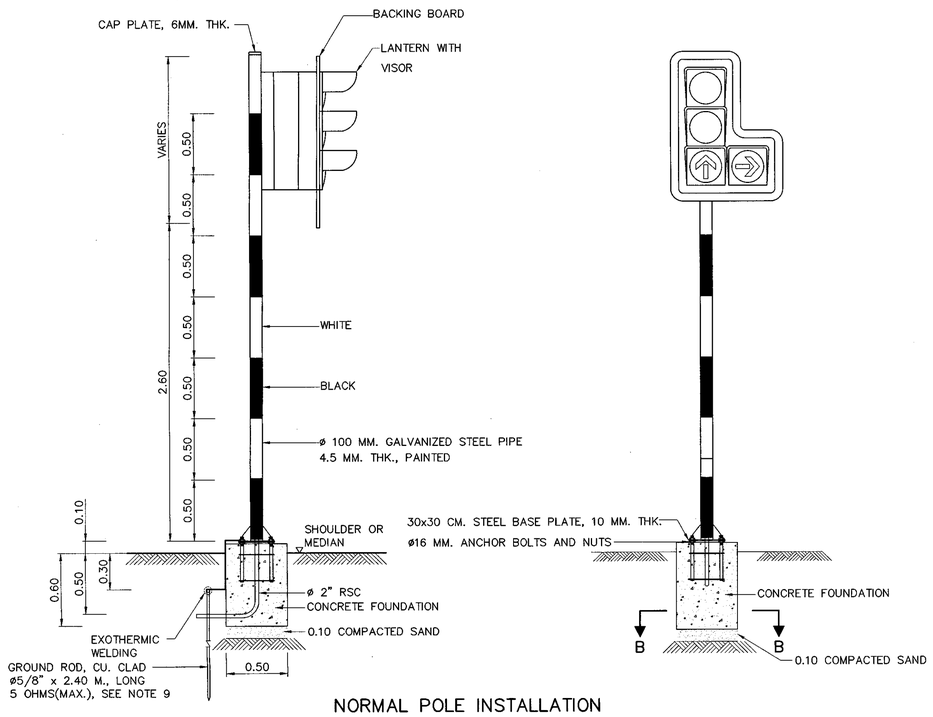

NORMAL POLE INSTALLATION

SCALE 1 : 25

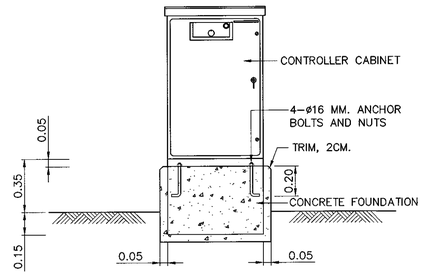

CONTROLLER CABINET

SCALE 1 : 20

SPECIFICATION AND CONDITION OF TRAFFIC SIGNAL CONTROLLER

1. CONTROLLER SHALL BE HOUSED IN A CABINET OF ALUMINUM, STAINLESS STEEL OR OTHER APPROVED MATERIAL HAVING STRENGTH AND RIGIDITY TO PROTECT THE CONTENTS FROM THE EFFECTS OF WATER, DUST AND ACCIDENTAL BLOWS, COATED WITH DARK GREY COLOR, WITHOUT CORROSION. SHEET METAL SHALL BE AT LEAST 2 MM. IN THICKNESS AT ALL POINTS AND REINFORCED WHERE NECESSARY. FERROUS METAL SHALL NOT BE BURIED AND IT SHALL BE RUST–PROOFED BY GALVANISING OR SOME OTHER QUALITY EFFECTIVE MEANS. IF ALUMINUM OR ALUMINUM ALLOY IS USED, IT SHALL BE SUITIBLY PROTECTED AGAINST ELECTROLYTIC FOR CHEMICAL CORROSION AND IN THE BASE OF THE HOUSING, IT SHALL CONTAIN AT LEAST 8% OF SILICON.
2. THE DOORS SHALL OPEN AND CLOSE FREELY WITHOUT BINDING ON THE FRAME OR THE BASE AND PROVIDE WITH LOCKED.
3. THE FRONT WINDOW WITH LOCKED FOR CONTROL KEY AND INDICATOR LAMPS SHALL BE PROVIDED.
4. THE CABINET SHALL BE ARTIFICIALLY VENTILATED WITHOUT FAN FOR HEAT DISSIPATION AND HUMIDITY RESISTANT.
5. THE CONTROLLER CABINET SHALL BE THE STANDARD PRODUCTION FROM MANUFACTURER INCLUDING BRAND NAME, TRADE MARK BE LAWFULL.
6. THE SIGNAL CONTROLLER SHALL BE MICROPROCESSOR TYPE.
7. THE CONTROLLER SHALL BE OF LIGHTNING PROTECTION DEVICE
8. THE CONTROLLER SHALL BE OPERATE SATISFACTORILY BETWEEN 220V–20% TO 220V+4% AND SHALL OPEN THE CONTROL CIRCUIT WHEN VOLTAGE BE UNDER OR OVER OR NOT CONSTANT AND AUTOMATICALLY RE–COMMENCE OPERATIONS WITHOUT THE NECESSITY FOR RE–SETTING.
9. THE CONTROLLER SHALL BE CAPABLE TO OPERATE AT LEAST 4 PHASES. TIME SWITCH SHALL BE CAPABLE TO BE SET NOT LESS THAN 4 PROGRAMS A DAY (EXCLUDING FLASHING).
10. WHEN FLASHING OPERATION IS CALL FOR, THIS SHALL BE PROGRAMMED AS RED FLASHING ON THE SECONDARY TRAFFIC DIRECTION AND AS AMBER FLASHING ON THE PRIMARY TRAFFIC DIRECTION OR OTHER OPERATION AS SPECIFIED IN THE GENERAL SPECIFICATION FOR FLASHING TRAFFIC SIGNALS.
11. THE CONTROLLER SHALL BE CAPABLE TO ALTERNATE SEQUENCE PHASES WHEN IT IS OPERATED AS MANUAL CONTROL.
12. THE CONTROLLER SHALL HAVE THE CONFLICT MONITORING SYSTEM OF SIGNAL INDICATION OF DIFFERENCE PHASINGS AT THE SAME TIME.
13. THE CONTROLLER SHALL BE PROVIDED WITH THE MECHANISM OR KEY MOUNTED ON THE CONTROLLER HOUSING FOR SETTING THE CYCLE TIME AND PROGRAM. IF EXTERNAL BUTTONS ARE USED, THE CONTRACTOR SHALL DELIVERY THEM TO DOH ON THE COMPLETION DATE. THE CONTRACTOR SHALL PROVIDE OR MAKE THE MANUAL OF THE SETTING OF PHASING, CYCLE TIME AND PROGRAM AND ALSO SUBMITTED TO DOH ON THE COMPLETION DATE.
14. TO PROVIDE THE SIGNAL WIRING DIAGRAM, OPERATING SYSTEM OF CONTROLLER AND SINGLE LINE DIAGRAM (AS–BUILT) FIXED TO A CLEARING VISUALITY PLACE INSIDE THE CONTROLLER CABINET.
15. THE CONTROLLER SHALL BE PROVIDED WITH PILOT LIGHTS SHOWING PHASING, DETECTOR ACTIVATION. THE PILOT LIGHTS WILL BE AUTOMATICALLY SHUT WHEN THE DOOR CLOSED.
    WITHIN 7 DAYS FROM THE STARTING CONTRACT DATE, THE CONTRACTOR SHALL SUBMIT MANUFACTURER'S DOCUMENT WHICH USED FOR DISTRIBUTE, ADVERTISING, THE PRODUCT SALE E.G. CATALOGUE, BROCHURE, ETC. THEY SHALL INCLUDE THE DETAILS OF TECHNICAL DATA OF THE CONTROLLER. ALL DOCUMENT SHALL BE INSPECTED AND APPROVED BY THE OWNER PRIOR TO INSTALLATION.
16. THE CONTROLLER SHALL HAVE THE BRAND, TRADE, MODEL, SPECIFICATION MET TO THE SUBMITTAL DOCUMENT AND MUST BE APPROVED BY ITEM 15. THE CONTRACTOR SHALL SUBMIT THE RELEVANT DOCUMENT AS FOLLOWS TO THE OWNER FOR REVIEW PRIOR TO INSTALLATION.
    16.1 DOCUMENTARY EVIDENCE SHOWING LEGALLY TAX PAID.
    16.2 DOCUMENT EVIDENCE SHOWING THE PURCHASE OR ACQUISITION THE CONTROLLER I.E. INVOICE, RECEIPT, ETC. ISSUED BY FACTORY OR MANUFACTURER OR SUPPLIER OR DISTRIBUTOR.
    16.2 DOCUMENT IN ITEM 16.1 AND 16.2 SHALL HAVE THE SERIAL NUMBER MET THE CONTROLLER'S.

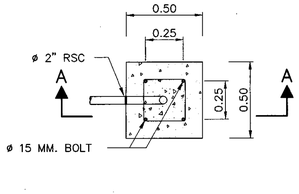

PLAN–CONCRETE FOUNDATION

SCALE 1 : 20

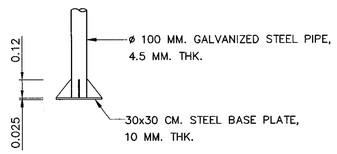

DETAIL–STEEL POLE

SCALE 1 : 20

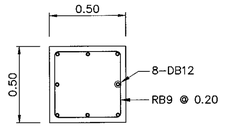

SECTION B–B

SCALE 1 : 100

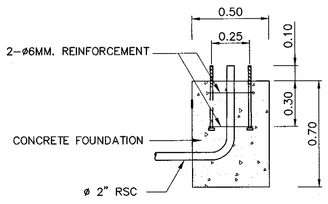

SECTION A–A

SCALE 1 : 20

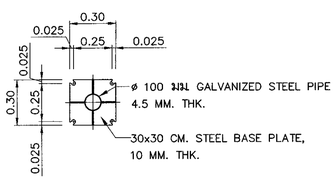

PLAN–BASE PLATE

SCALE 1 : 20

NOTES :

1. ALL DIMENSIONS ARE IN METERS UNLESS OTHERWISE INDICATED.
2. CONCRETE MINIMUM ULTIMATE STRENGTH (CUBE 0.15x0.15x0.15) AT 28 DAYS SHALL BE 20 MPa (204 KG/CM^2).
3. REINFORCING STEEL AS FOLLOWS:
   3.1 TIS.20, GRADE SR24 FOR ROUND BAR.
   3.2 TIS.24, GRADE SR40 FOR REBAR.
4. THE POLE SHALL BE PROVIDED WITH 2 PRIME COATS AND MINIMUM 2 FINISHING COATS.
5. ALL DETAILS OF CIVIL AND STRUCTURE WORK ARE THE GUIDE ONLY. THE CONTRACTOR SHALL BE SUBMIT THE DRAWING INCLUDING THE CALCULATION SHEETS TO THE AUTHORIZED ENGINEER FOR APPROVAL PRIOR TO CONSTRUCTION.
6. THE PILE FOOTING USING PC.PILE ☐–0.20M.x0.20M. (ALLOWABLE LOAD = 8 TON/PILE) IS REQUIRED FOR SOFT CLAY OR SLOPE SHOULDER CONDITION.
7. ALL EXPOSED CONCRETE CORNERS SHALL HAVE 20MM. CHAMFER.
8. IN CASE OF LOCATING A SIGNAL NORMAL POLE MOUNTED L–TYPE SIGNAL HEAD ON THE NARROW MEDIAN WHICH ANY PART OF SIGNAL OBSTRUCT CAUSE A HAZARD TO USER, THE 4–ASPECT SIGNAL HEAD, VERTICAL ARRANGEMENT, SHOULD BE APPLIED.
9. FOR THE AREA DIFFICULTLY TO MAINTENANCE WITH APPROVAL OF MEA/PEA, THE RESISTANCE BETWEEN GROUND AND GROUND ROD ALLOWED BE MORE THAN 5 OHMES BUT NOT EXCEED TO 25 OHMS.

REF.	REVISION	SIGNATURE	DATE

KINGDOM OF THAILAND

MINISTRY OF TRANSPORT
DEPARTMENT OF HIGHWAYS

STANDARD DRAWING

ROAD TRAFFIC SIGNALS

TRAFFIC SIGNAL CONTROLLER AND POLE DETAILS

DESIGNED : D.O.H. & CONSULTANTS	CHECKED : BUREAU OF LOCATION & DESIGN	DATE : OCT 2015
SUBMITTED : (DIRECTOR OF LOCATION & DESIGN BUREAU)		SCALE : AS SHOWN
APPROVED : (FOR DIRECTOR GENERAL)		DWG NO. TF–103
		SHEET NO. 197

D:\std dwg 2015\TF-103(REV00)

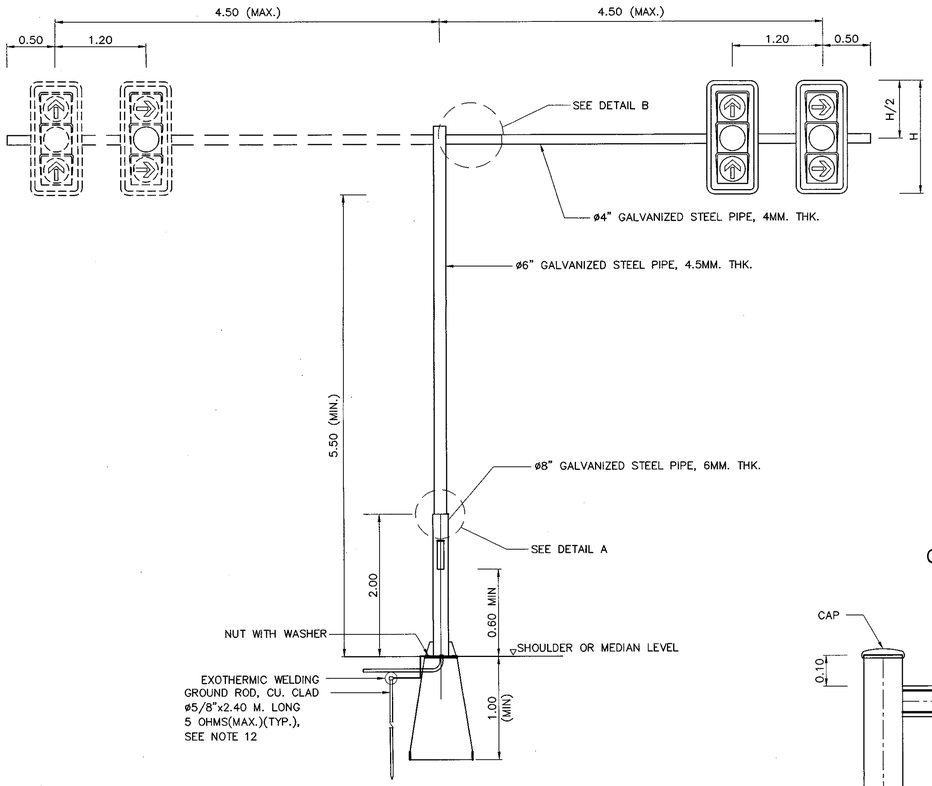

MAST ARM POLE
NOT TO SCALE

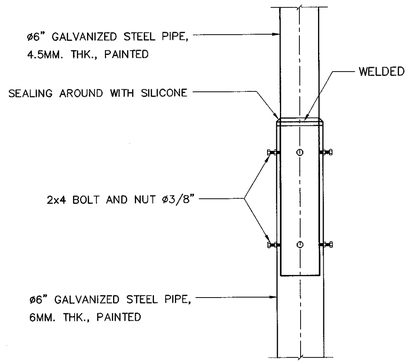

DETAIL A
NOT TO SCALE

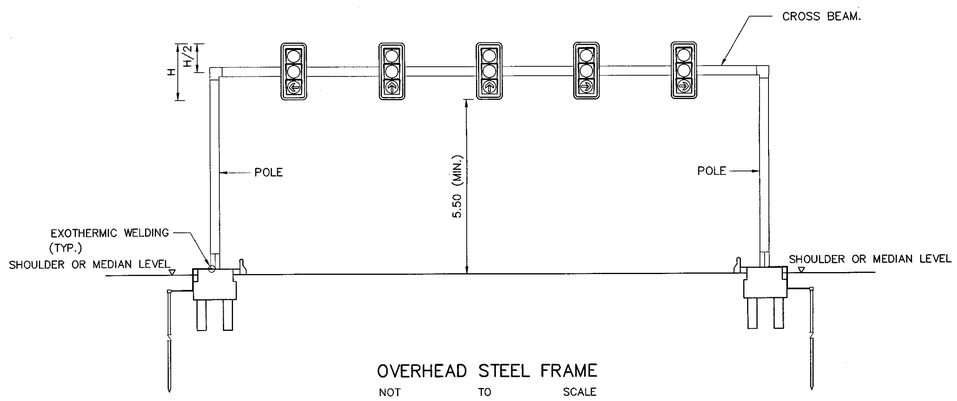

OVERHEAD STEEL FRAME
NOT TO SCALE

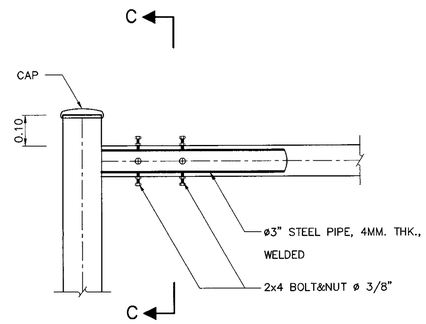

DETAIL B
NOT TO SCALE

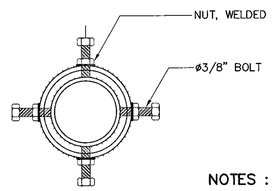

SECTION C–C
NOT TO SCALE

NOTES :

1. ALL DIMENSIONS ARE IN METERS UNLESS OTHERWISE INDICATED.
2. CONCRETE MINIMUM ULTIMATE STRENGTH (CUBE 0.15x0.15x0.15) AT 28 DAYS SHALL BE 20 MPa (206 KG/CM^2).
3. REINFORCING STEEL AS FOLLOWS:
   3.1 TIS.20, GRADE SR24 FOR ROUND BAR.
   3.2 TIS.24, GRADE SR40 FOR REBAR.
4. THE POLE SHALL BE PROVIDED WITH 2 PRIME COATS AND MINIMUM 2 FINISHING COATS.
5. ALL DETAILS OF CIVIL AND STRUCTURE WORK ARE THE GUIDE ONLY. THE CONTRACTOR SHALL BE SUBMIT THE DRAWING INCLUDING THE CALCULATION SHEETS TO THE AUTHORIZED ENGINEER FOR APPROVAL PRIOR TO CONSTRUCTION.
6. THE PILE FOOTING USING PC.PILE ☑–0.20M.x0.20M. (ALLOWABLE LOAD = 8 TON/PILE) IS REQUIRED FOR SOFT CLAY OR SLOPE SHOULDER CONDITION.
7. ALL EXPOSED CONCRETE CORNERS SHALL HAVE 20MM. CHAMFER.
8. THE BOLT SHALL BE HIGH–STRENGTH BOLT, A325 CONFORMED TO ASTM.
9. IN GENERALLY, THE MAST ARM POLE SHALL USE IN CASE OF NOT MORE THAN 3 LANES OR SPECIFILED ON THE DRAWING.
10. IN GENERALLY, THE OVERHEAD STEEL FRAME SHALL USE IN CASE OF MORE THAN 3 LANES BUT NOT MORE THAN 5 LANES OR SPECIFILED ON THE DRAWING.
11. FOR THE STRUCTURE DETAILS OF OVERHEAD STEEL FRAME SEE DRAWING NO. RS–404.
12. THE DISTANCE BETWEEN THE ADJACENT SIGNAL FACES MAY BE ADJUST. THE SIGNAL FACE NORNALLY BE MOUNTED AT THE CENTER OF ROADWAY BUT MAY BE WITH THE DECISION OF THE DESIGN ENGINEER OR SUPERVISED ENGINEER BE MOUNTED AT THE CENTER OF TRAFFIC LANE.
13. FOR THE AREA DIFFICULTLY TO MAINTENANCE WITH APPROVAL OF MEA/PEA, THE RESISTANCE BETWEEN GROUND AND GROUND ROD ALLOWED BE MORE THAN 5 OHMES BUT NOT EXCEED TO 25 OHMS.

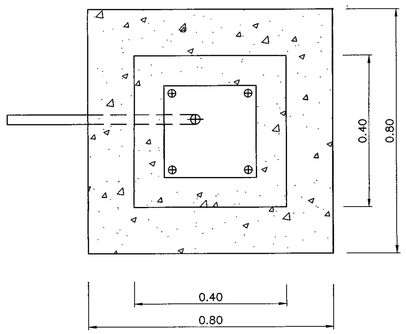

PLAN–FOUNDATION
NOT TO SCALE

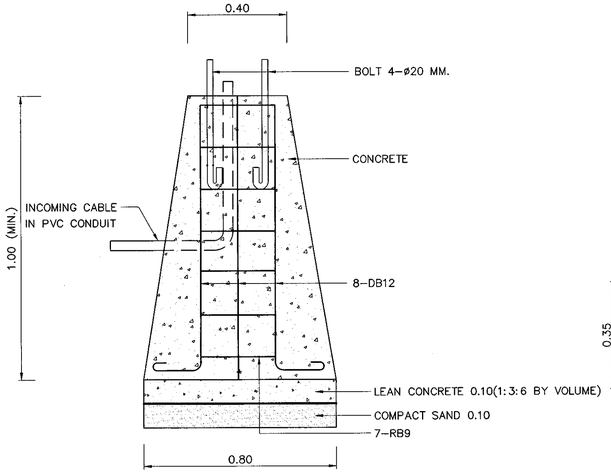

CONCRETE FOUNDATION
NOT TO SCALE

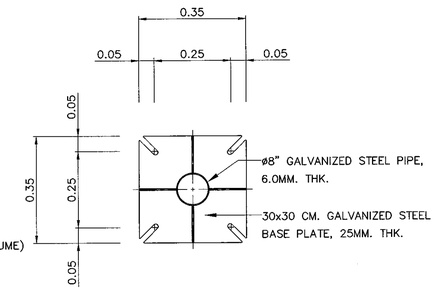

BASEPLATE
NOT TO SCALE

KINGDOM OF THAILAND
MINISTRY OF TRANSPORT
DEPARTMENT OF HIGHWAYS

STANDARD DRAWING
ROAD TRAFFIC SIGNALS
TRAFFIC SIGNAL MAST POLE DETAILS

DESIGNED : D.O.H. & CONSULTANTS	**CHECKED :** BUREAU OF LOCATION & DESIGN	**DATE :** OCT 2015
SUBMITTED : (DIRECTOR OF LOCATION & DESIGN BUREAU)		**SCALE :** AS SHOWN
APPROVED : (FOR DIRECTOR GENERAL)		**DWG NO.** TF–104
		SHEET NO. 198

REF.	REVISION	SIGNATURE	DATE

D:\std dwg 2015\TF-104(REV00)

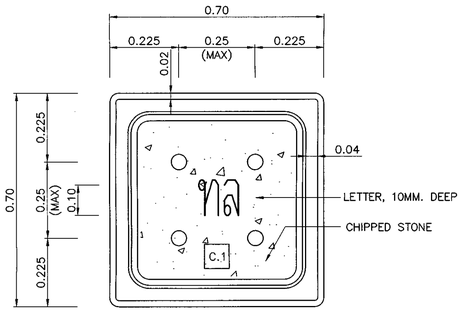

PLAN WITH COVER–HANDHOLE TYPE C.1
NOT TO SCALE

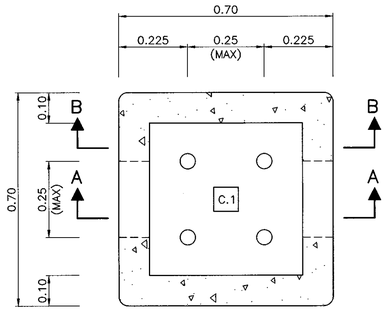

SECTION E–E
SCALE 1 : 10

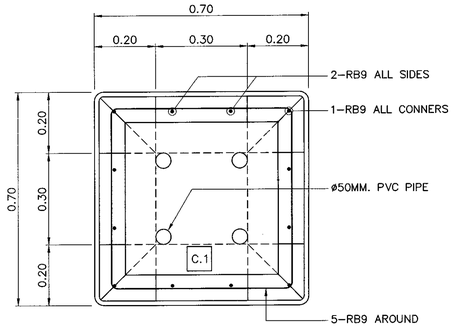

PLAN–REINFORCEDMENT
NOT TO SCALE

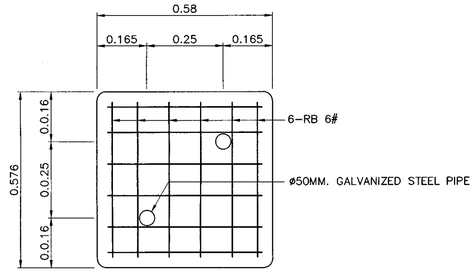

PLAN–COVER REINFORCEMENT
NOT TO SCALE

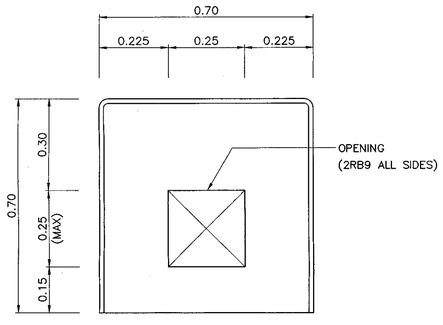

SIDE VIEW–HANDHOLE TYPE C.1
SCALE 1 : 10

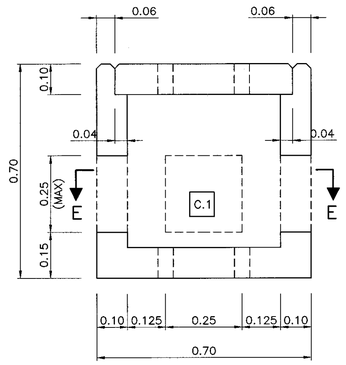

SECTION A–A
SCALE 1 : 10

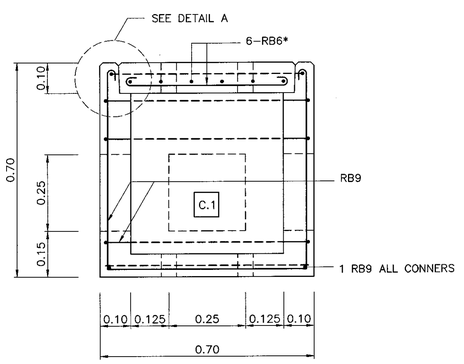

SECTION B–B
SCALE 1 : 10

NOTES :

1. ALL DIMENSIONS ARE IN METERS UNLESS OTHERWISE INDICATED.
2. CONCRETE MINIMUM ULTIMATE STRENGTH (CUBE 0.15x0.15x0.15) AT 28 DAYS SHALL BE 20 MPa (204 KG/CM^2).
3. REINFORCING STEEL SHALL CONFORM TO TIS.20, GRADE SR24.
4. C.1 HANDHOLE, STANDARD TYPE, SIZE 0.70x0.70x0.70 M.
5. C.2 HANDHOL FOR OBSTRUCTION AND CAN NOT USE STANDARD TYPE.
6. ALL EXPOSED CONCRETE CORNERS SHALL HAVE 20MM. CHAMFER.

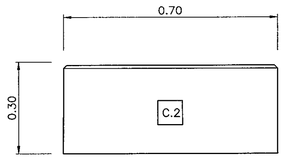

SIDE VIEW–HANDHOLE TYPE C.2
SCALE 1 : 10

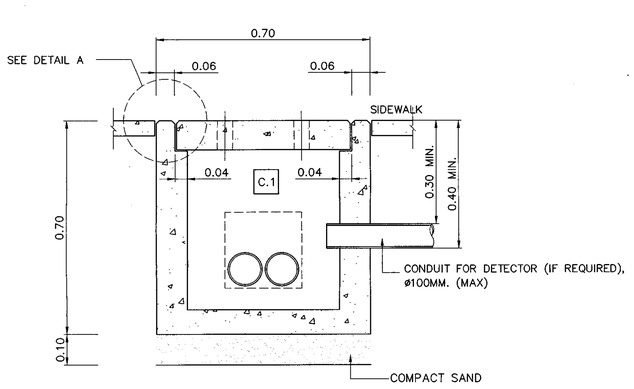

SECTION A–A
NOT TO SCALE

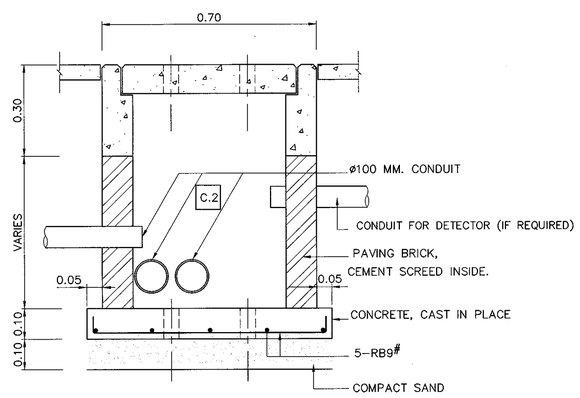

SECTION D–D
NOT TO SCALE

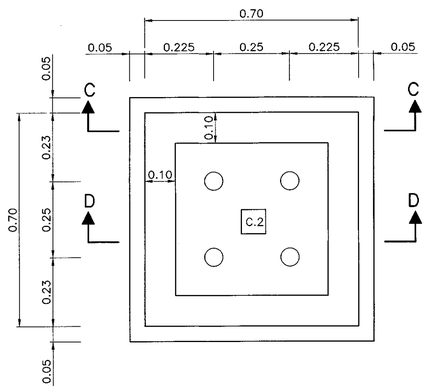

PLAN–HANDHOLE TYPE C.2
NOT TO SCALE

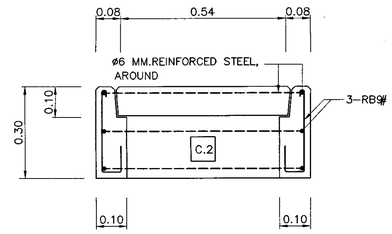

SECTION C–C
SCALE 1 : 10

KINGDOM OF THAILAND

MINISTRY OF TRANSPORT
DEPARTMENT OF HIGHWAYS

STANDARD DRAWING

ROAD TRAFFIC SIGNALS
HANDHOLE FOR TRAFFIC SIGNALS

DESIGNED : D.O.H. & CONSULTANTS	CHECKED : BUREAU OF LOCATION & DESIGN	DATE : OCT 2015
SUBMITTED : (DIRECTOR OF LOCATION & DESIGN BUREAU)		SCALE : AS SHOWN
APPROVED : (FOR DIRECTOR GENERAL)		DWG NO. TF–105
		SHEET NO. 199

REF.	REVISION	SIGNATURE	DATE

D:\std dwg 2015\TF-105(REV00)

PART 2

STANDARD DRAWINGS FOR STRUCTURAL WORK

1. DESIGN STANDARD AND CODES OF PRACTICE

AASHTO : AMERICAN ASSOCIATION OF STATE HIGHWAY AND TRANSPORTATION OFFICIALS, AASHTO LRFD BRIDGE DESIGN SPECIFICATIONS, 6th EDITION, 2012

: AMERICAN ASSOCIATION OF STATE HIGHWAY AND TRANSPORTATION OFFICIALS, AASHTO GUIDE SPECIFICATIONS FOR LRFD SEISMIC BRIDGE DESIGN, 2nd EDITION, 2011

USING THE FOLLOWING CODES WHEN THE AASHTO LRFD (2012) SPECIFICATIONS IS NOT SPECIFIED.

ACI : AMERICAN CONCRETE INSTITUTE, BUILDING CODE REQUIREMENTS FOR STRUCTURAL CONCRETE, ACI 318M-11, 2011

BSI : BRITISH STANDARDS INSTITUTION, BS 5400

PCI : PRECAST AND PRESTRESSED CONCRETE INSTITUTE, PCI DESIGN HANDBOOK: PRECAST AND PRESTRESSED CONCRETE, 6th EDITION, 2010

2. MATERIAL SPECIFICATIONS

2.1 CONCRETE

2.1.1 CLASSIFICATIONS OF CONCRETE AND THE MINIMUM CEMENT CONTENTS SHALL BE AS FOLLOWS, UNLESS OTHERWISE SPECIFIED IN THE DRAWING.

CLASS	COMPRESSIVE CUBE STRENGTH AT 28 DAYS*(MPa)	MINIMUM CEMENT CONTENT (KG/M^3)
A	51-60	500
B	46-50	450
C	41-45	400
D	30-40	350
E	<30	300

2.1.2 THE COMPRESSIVE STRENGTH (f_{cu}) OF CONCRETE CUBES (15x15x15 CM.) SHALL BE AS FOLLOWS :

STRUCTURAL TYPES	STRUCTURAL ELEMENTS	COMPRESSIVE CUBE STRENGTH* AT 28 DAYS (MPa)	MINIMUM CEMENT CONTENT (KG/M^2)
SUPERSTRUCTURE	POST-TENSIONED I-GIRDER	45	400
	PRECAST I-GIRDER/BOX BEAM	50	450
	PRECAST PLANK GIRDER	50	450
	DECK SLAB FOR I-GIRDER/DIAPHRAGM	35	350
	CONCRETE TOPPING/SHEAR KEY	40	350
	SLAB TYPE BRIDGE/BARRIER/SIDEWALK	35	350
SUBSTRUCTURE	PIER AND CAP BEAM	35	350
	FOOTING	35	350
	ABUTMENT/WINGWALL	35	350
	BORED PILE (DRY PROCESS)	30	350
	BORED PILE (WET PROCESS)	35	350
	R.C. DRIVEN PILE	35	350
	PRECAST DRIVEN PILE	45	400
	PRECAST SPUN PILE	60	500
OTHERS	RETAINING WALL	35	350
	R.C. BOX CULVERT	30	350
	PRECAST BOX CULVERT	40	350
	OTHERS, NOT SPECIFY ABOVE	35	300
NON-STRUCTURE	LEAN CONCRETE (1:3:6 BY VOLUME)		

THE MIX DESIGN FOR ALL CLASSES OF CONCRETE, EXCEPT LEAN CONCRETE, SHALL BE SUBMITTED FOR APPROVAL

FOR THE CONCRETE COMPRESSIVE CUBE STRENGTH OVER THAN 35 MPa, THE NOMINAL AGGREGATE SIZE SHALL BE LIMITED TO 20 MM.

* FOR SPECIFICATION OF CONCRETE COMPRESSIVE STRENGTH, TEST RESULTS OF STANDARD CONCRETE 15x15x15 CENTIMETER CUBE AGED AT 28 DAYS ARE USED AS CRITERION. IN CASE THE COMPRESSIVE STRENGTHS OBTAINED FROM THE TESTING AT AGE EARLIER THAN 28 DAYS ARE NOT LESS THAN THE COMPRESSIVE STRENGTH AS SPECIFIED, THE CONCRETE SHALL BE ACCEPTED AS HAVING SPECIFIED COMPRESSIVE STRENGTH AT AGE OF 28 DAYS.

2.1.3 WHEN THE CONCRETE STRUCTURE IS EXPOSED TO HIGH LEVELS OF CHLORIDE ION (CL^-) OR USING NEAR SALTWATER, THE MAXIMUM WATER CEMENT RATIO (W/C RATIO) OF 0.40 AND THE SPECIAL CEMENT SUCH AS POZZOLAN PORTLAND CEMENT ARE RECOMMENDED. THE MINIMUM CUBE STRENGTH (f_{cu}) OF 40 MPa. (408 KG/CM^2) IS RECOMMENDED. THE SHORT-TERM (6 HOURS) RAPID CHLORIDE PERMEABILITY TEST (RCPT) SHALL BE SUBMITTED FOR APPROVAL, THE MAXIMUM RAPID CHLORIDE PERMEABILITY IS 1,500 COULOMBS (ASTM C1202).

2.1.4 WHEN THE CONCRETE STRUCTURE IS EXPOSED TO HIGH LEVELS OF SULPHATE ION (SO_4^{2-}) OR USING NEAR WASTEWATER, THE MAXIMUM WATER CEMENT RATIO (W/C RATIO) OF 0.45 AND HIGH SULPHATE RESISTANCE PORTLAND CEMENT CONFORMING TIS 15 SHALL BE USED. THE MINIMUM CUBE STRENGTH (f_{cu}) OF 40 MPa. (408 KG/CM^2) IS RECOMMENDED.

2.1.5 THE USE OF AGGREGATE FROM SOURCES THAT ARE KNOWN TO BE EXCESSIVELY ALKALI-SILICA REACTIVE (ASR) SHALL BE PROHIBITED.

2.1.6 CONCRETE COVER

UNLESS NOTED ON THE DRAWINGS, THE FOLLOWING MINIMUM CONCRETE COVER (FROM FACE OF CONCRETE TO FACE OF REBAR) SHALL BE PROVIDED AS INDICATED BELOW.

CAST-IN-PLACE CONCRETE PILE	75 MM.
PRECAST AND R.C. PILES	50 MM.**
FOOTING	75 MM.
PIER	50 MM.**
TOP REBARS IN DECK SLAB	40 MM.
BARRIER AND OTHERS	30 MM.

** IF PIERS OR PILES ARE IN SALTWATER, THE COVERING MUST BE75 MM.

2.1.7 ALL EXPOSED CONCRETE CORNERS SHALL HAVE A 20 MM. CHAMFER UNLESS OTHERWISE INDICATED

2.2 REBAR REINFORCEMENT

2.2.1 MILD STEEL ROUND BARS GRADE SR24 ACCORDING TO TIS 20 DENOTED BY "RB" SHALL BE USED FOR REBARS WITH DIAMETER 6 AND 9 MM., UNLESS OTHERWISE INDICATED.

2.2.2 HIGH YIELD DEFORMED BARS GRADE SD40 ACCORDING TO TIS 24 DENOTED BY "DB" SHALL BE USED FOR REBARS WITH DIAMETER 12, 16, 20, 25 AND 28 MM., UNLESS OTHERWISE INDICATED.

2.2.4 UNLESS NOTED ON THE DRAWINGS, THE FOLLOWING MINIMUM CLEAR DISTANCE BETWEEN PARALLEL BARS SHALL BE PROVIDED AS INDICATED BELOW.

REBAR SIZE	THE MINIMUM CLEAR DISTANCE
RB9, DB12, DB16, DB20 AND DB25	35 MM. IN A LAYER
DB28	40 MM. IN A LAYER
ANY REBARS TWO OR MORE LAYERS	25 MM. BETWEEN LAYERS

2.2.5 THE RESISTANCE OF FULL-MECHANICAL CONNECTION SHALL NOT BE LESS THAN 125 PERCENT OF THE SPECIFIED YIELD STRENGTH OF THE REBAR IN TENSION OR COMPRESSION, AS REQUIRED.

2.2.6 ALL HOOKS, IF NOT BE SHOWN ON THE DRAWING, SHALL COMPLY WITH AASHTO LRFD (2012) STANDARD HOOKS.

2.2.7 STANDARD HOOK DETAILS AND DEVELOPMENT LENGTH OF STANDARD HOOKS AS FOLLOWS :

2.2.7.1 STANDARD HOOK DIMENSIONS OF MAIN REINFORCING

REBAR DIAMETER (d_b)	HOOK (A)		DIAMETER OF REBAR BENT (D)
	90° HOOK	180° HOOK	
RB9	0.15	0.12	0.06
DB12	0.20	0.15	0.08
DB16	0.25	0.18	0.10
DB20	0.30	0.20	0.12
DB25	0.40	0.25	0.15
DB28	0.45	0.30	0.23

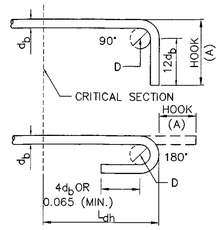

D = $6d_b$ FOR RB9, DB12-DB25
D = $8d_b$ FOR DB28

2.2.7.2 STANDARD HOOK DIMENSIONS OF STIRRUP AND TIE

REBAR DIAMETER (d_b)	HOOK (A)		DIAMETER OF REBAR BENT (D)
	90° HOOK	135° HOOK	
RB9	0.10	0.10	0.04
DB12	0.15	0.12	0.05
DB16	0.15	0.15	0.07

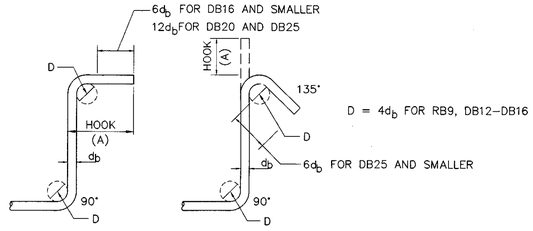

D = $4d_b$ FOR RB9, DB12-DB16

2.2.7.3 DEVELOPMENT LENGTH (L_{dh}) OF STANDARDS HOOKS
THE DEVELOPMENT LENGTH IS MEASURED FROM THE CRITICAL SECTION TO THE OUTSIDE END (OR EDGE) OF THE HOOK.

REBAR DIAMETER (d_b)	DEVELOPMENT LENGTH (L_{dh})		
	f_{cu}= 30 MPa	f_{cu}= 35 MPa	f_{cu}= 40 MPa
RB9	0.18	0.12	0.16
DB12	0.24	0.22	0.21
DB16	0.32	0.30	0.28
DB20	0.40	0.37	0.34
DB25	0.50	0.46	0.43
DB28	0.56	0.52	0.48

2.2.7.4 NOTATION OF BAR REINFORCEMENT

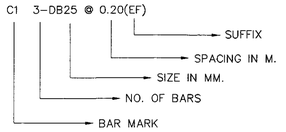

SUFFIX :
T = TOP
B = BOTTOM
EF = EACH FACE
FF = FAR FACE
NF = NEAR FACE
IF = INSIDE FACE
OF = OUTSIDE FACE
# = EACH WAY

2.2.8 LAP LENGTH OF SPLICING IS NOT APPLIED IN CRITICAL REGIONS OF DUCTILE OR SEISMIC-CRITICAL MEMBERS.
THE REQUIRED LENGTHS OF SPLICES IN REINFORCING STEEL ARE AS FOLLOWS :

REBAR DIAMETER (d_b)	LAP LENGTH (f_{cu} = 30 MPa)			LAP LENGTH (f_{cu} = 35 MPa)			LAP LENGTH (f_{cu} = 40 MPa)		
	COMP.	TENSION**		COMP.	TENSION**		COMP.	TENSION**	
		TOP BAR*	OTHER		TOP BAR*	OTHER		TOP BAR*	OTHER
DB12	0.40	0.55	0.40	0.40	0.55	0.40	0.40	0.55	0.40
DB16	0.50	0.70	0.50	0.50	0.70	0.50	0.50	0.70	0.50
DB20	0.60	0.90	0.65	0.60	0.90	0.65	0.60	0.90	0.65
DB25	0.75	1.40	1.00	0.75	1.30	0.95	0.75	1.20	0.90
DB28	0.85	1.75	1.25	0.85	1.65	1.15	0.85	1.50	1.10

* MINIMUM 0.30 M CONCRETE CAST BELOW

** THE MAXIMUM PERCENTAGE OF REINFORCEMENT SPLICED AT THE SAME SECTION SHALL BE 50

NOTES :

1. ALL DIMENSIONS SHOWN ARE IN METERS UNLESS OTHERWISE INDICATED.
2. THE GENERAL NOTES ARE RECOMMENDED UNLESS OTHERWISE SPECIFIED IN THE DRAWING
3. THE SKEW ANGLE (θ) IS THE ANGLE IN DEGREES BETWEEN THE DIRECTION OF THE CANAL AND A LINE PERPENDICULAR TO THE ROADWAY

REV.1	REVISION 1/2017		JUN 2017
REV.	REVISION	SIGNATURE	DATE

KINGDOM OF THAILAND

MINISTRY OF TRANSPORT

DEPARTMENT OF HIGHWAYS

STANDARD DRAWING

STRUCTURAL NOTES

GENERAL NOTES - I

DESIGNED : D.O.H. & CONSULTANTS	**CHECKED :** BUREAU OF LOCATION & DESIGN	**DATE :** OCT 2015
SUBMITTED : (DIRECTOR OF LOCATION & DESIGN BUREAU)		**SCALE :** AS SHOWN
APPROVED : (FOR DIRECTOR GENERAL)		**DWG NO.** GN-001
		SHEET NO. 200/R1

3. HIGHWAY DESIGN LOADINGS

LIVE LOAD : HL-93 ; BASIC WIND SPEED : 120 KM/HR

4. BEARING AND EXPANSION JOINT

BEARINGS AND EXPANSION JOINTS SHALL BE DESIGNED AND MANUFACTURED ACCORDING TO AASHTO LRFD (2012) REQUIREMENTS OF LOADS, TRANSLATIONS AND ROTATIONS

5. DRAWING SYMBOLS AND NOTATION

- SECTION IN EXISTING GROUND
- SECTION THROUGH REINFORCED CONCRETE (W OR W/O REINFORCEMENT INDICATED)
- SECTION IN CAST-IN-PLACE
- SECTION IN CONCRETE PRECAST
- SECTION THROUGH ASPHALTIC CONCRETE SURFACE
- SECTION THROUGH SAND
- SECTION IN GRAVEL
- PLAN VIEW AND ELEVATION OF CUT AND FILL SLOPES
- 1:2 SLOPE 1:2 = 1 (VERTICAL LINE) TO 2 (HORIZONTAL LINE)
- ℄ CENTER LINE
- ⊠ SQUARE PILE
- ⫽ REINFORCEMENT IN BOTH WAYS
- Ø DIAMETER
- REBAR AS SEEN ON CROSS SECTION OR PLAN
- REBAR BENT PERPENDICULAR TO OR FROM READER
- LAP SPLICE OF REBAR
- BREAK ON REBAR
- WATER LEVEL
- TO INDICATE END OF DEFORMED BARS WITHOUT HOOK
- EXAMPLE : ⟋ MEANS —
- BAR BENT AWAY FROM THE READER
- LIMIT OF AREA COVERED BY REBARS
- X X SECTION STRUCTURE
- XX-000 STRUCTURAL TYPES / DRAWING NUMBERS / SERIES NUMBER / STRUCTURAL SUBTYPES
- L ANGLE
- C CHANNEL } STRUCTURAL STEEL SECTION
- I I - BEAM

ASTM	AMERICAN SOCIETY FOR TESTING AND MATERIALS
C/C	CENTER OF CENTER
CG.	CENTROID
C.G.S	CENTROID OF STEEL
CIS.	CAST-IN-SITU
@	REBAR OR STIRRUP SPACING
℄	CENTERLINE
CM	CENTIMETER
CM^2	SQUARE CENTIMETER
DIA.	DIAMETER
D.O.H.	DEPARTMENT OF HIGHWAYS
DWG.	DRAWING
H	CLEAR COLUMN HEIGHT
H.W.L.	HIGH WATER LEVEL
kN	KILONEWTON
KG/CM^2	KILOGRAM PER SQUARE CENTIMETER
L.W.L.	LOW WATER LEVEL
M	METER
M^2	SQUARE METER
M^3	CUBIC METER
MM	MILLIMETER
MAX.	MAXIMUM
MIN.	MINIMUM
M.S.L.	MEAN SEA LEVEL
PC.	PRESTRESSED CONCRETE
R.C.	REINFORCED CONCRETE
S1	ROAD NORMAL CROWN OR CROSS SLOPE (%)
TIS	THAI INDUSTRIAL STANDARD

6. SEISMIC RESISTANCE DETAILS

6.1 SEISMIC PERFORMANCE LEVEL IN THAILAND ACCORDING TO AREA UNDER MINISTERIAL REGULATION B.E. 2550

SEISMIC LEVELS	SEISMIC AREAS
LEVEL 1A	PROVINCES IN NORTHEAST AND EASTERN REGIONS
LEVEL 1B	ALL PROVINCES, EXCEPT SEISMIC AREAS IN LEVEL 1A AND LEVEL 2
LEVEL 2	KANCHANABURI, CHIANG RAI, CHIANG MAI, TAK, NAN, PHAYAO, PHRAE, LAMPANG, LAMPHUN AND MAE HONG SON

6.2 STEEL REINFORCEMENT DETAILS FOR RESIST EARTHQUAKE (LEVEL 1B AND LEVEL 2)

6.2.1 SEISMIC STIRRUP AND TIE HOOKS SHALL CONSIST OF A 135-DEGREE BEND, PLUS AN EXTENSION THE LARGER OF $6d_b$ OR 75 MM. THE SEISMIC HOOKS SHALL BE USED FOR STIRRUP AND TIE IN REGIONS OF EXPECTED PLASTIC HINGES. SUCH HOOKS AND THEIR REQUIRED LOCATIONS SHALL BE DETAILED IN THE DRAWINGS.

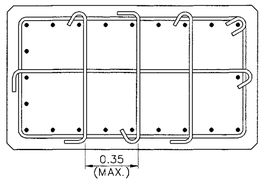

6.2.2 TRANSVERSE REINFORCEMENT REQUIREMENTS

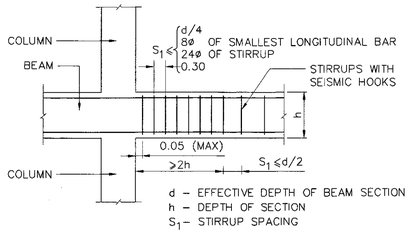

TYPICAL TRANSVERSE REINFORCEMENT DETAIL FOR FLEXURAL MEMBERS

NOTE : LAP SPLICES SHOULD NOT BE USED WITHIN A DISTANCE OF TWICE THE BEAM DEPTH (2h) FROM THE FACE OF COLUMN.

6.2.3 SPLICE REQUIREMENTS

6.2.3.1 LAP SPLICES OF CAP BEAM (BEAM) ARE PERMITTED ONLY IF HOOP OR SPIRAL REINFORCEMENT IS PROVIDED OVER THE LAP LENGTH

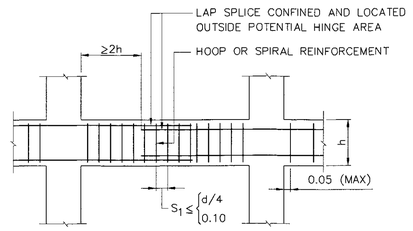

LAP SPLICE REQUIREMENTS

6.2.3.2 LAP SPLICE OF REINFORCING BAR AT THE COLUMN ENDS IS NOT PERMITTED, AND POSITION OF MAIN REINFORCING BAR SPLICING OF COLUMN SHALL LOCATED AT THE MIDDLE.

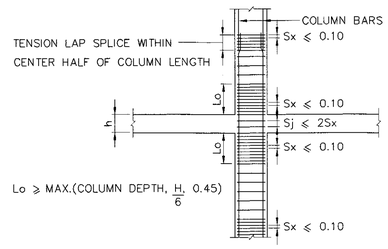

TYPICAL SPLICE LOCATION FOR COLUMNS

6.2.3.3 MINIMUM DEVELOPMENT AND SPLICE LENGTHS OF REBARS SHALL BE APPROVAL BY THE ENGINEER.

6.2.4 STEEL REINFORCEMENT DETAILS OF PILE BENT AND PIERS FOR RESIST EARTHQUAKE (LEVEL 1B AND LEVEL 2)

6.2.4.1 PILE BENT DETAIL

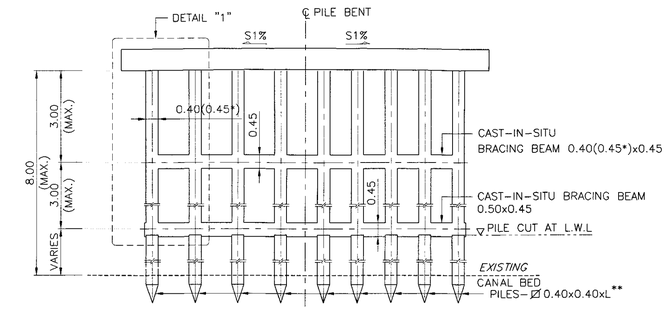

PILE BENT DETAIL
SCALE 1 : 75

NOTE : * USING 0.45 WHEN PILE BENT AND BEAM ARE IN SALTWATER
** PILE LENGTH SHALL BE DETERMINED FOR EACH PILE

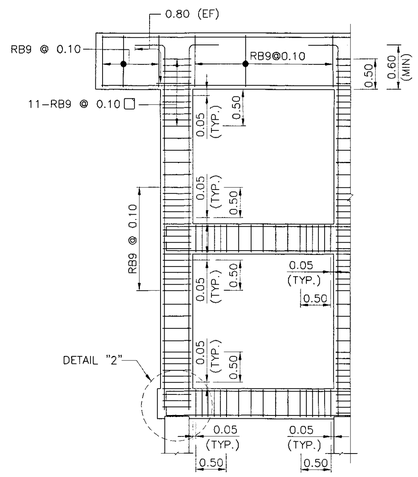

DETAIL "1"
SCALE 1 : 50

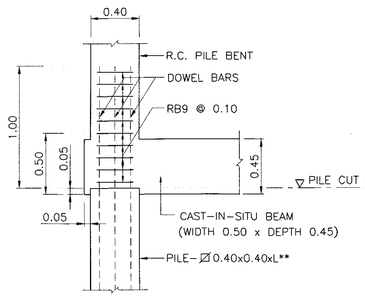

DETAIL "2" (REGULAR)
SCALE 1 : 25

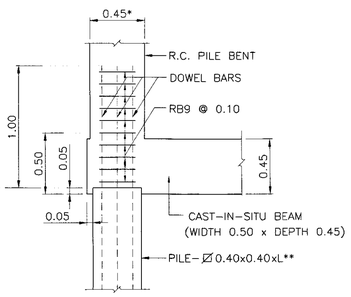

DETAIL "2" (CL^- AND SO_4^{2-} PROTECTION)
SCALE 1 : 25

NOTES :

1. ALL DIMENSIONS SHOWN ARE IN METERS UNLESS OTHERWISE INDICATED.
2. THE GENERAL NOTES ARE RECOMMENDED UNLESS OTHERWISE SPECIFIED IN THE DRAWING
3. THE SKEW ANGLE (θ) IS THE ANGLE IN DEGREES BETWEEN THE DIRECTION OF THE CANAL AND A LINE PERPENDICULAR TO THE ROADWAY

REV.	REVISION	SIGNATURE	DATE
REV.1	REVISION 1/2017		JUN 2017

KINGDOM OF THAILAND
MINISTRY OF TRANSPORT
DEPARTMENT OF HIGHWAYS

STANDARD DRAWING
STRUCTURAL NOTES
GENERAL NOTES – II

DESIGNED : D.O.H. & CONSULTANTS	**CHECKED :** BUREAU OF LOCATION & DESIGN	**DATE :** OCT 2015
SUBMITTED : (DIRECTOR OF LOCATION & DESIGN BUREAU)		**SCALE :** AS SHOWN
APPROVED : (FOR DIRECTOR GENERAL)		**DWG NO.** GN-002
		SHEET NO. 201/R1

6.2.4.2 PIER DETAIL

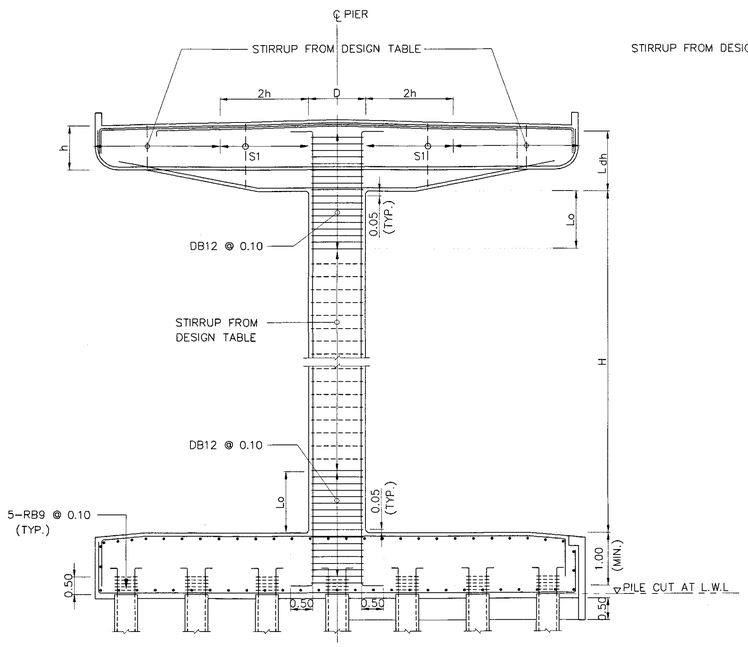

SINGLE PIER DETAIL
NOT TO SCALE

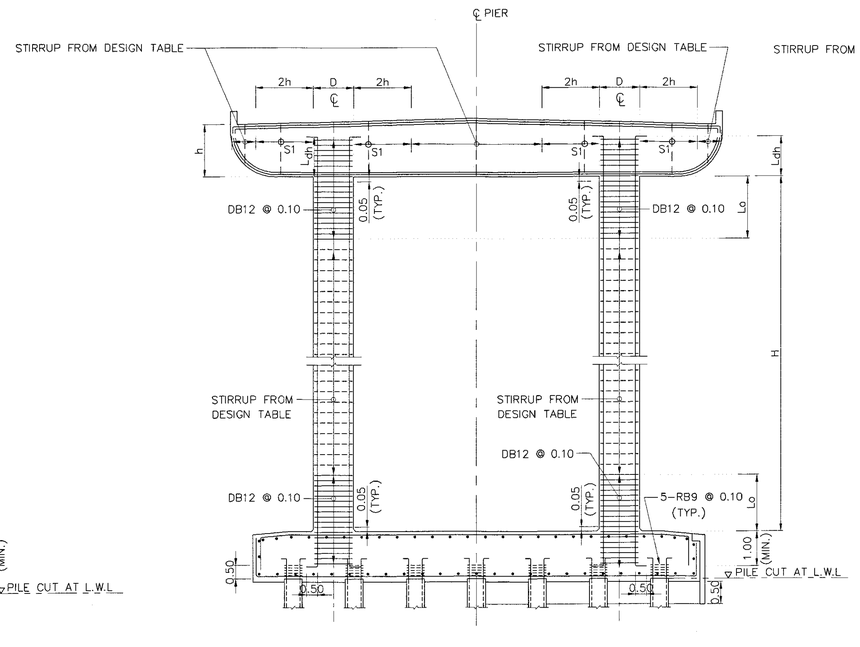

DOUBLE PIER DETAIL
NOT TO SCALE

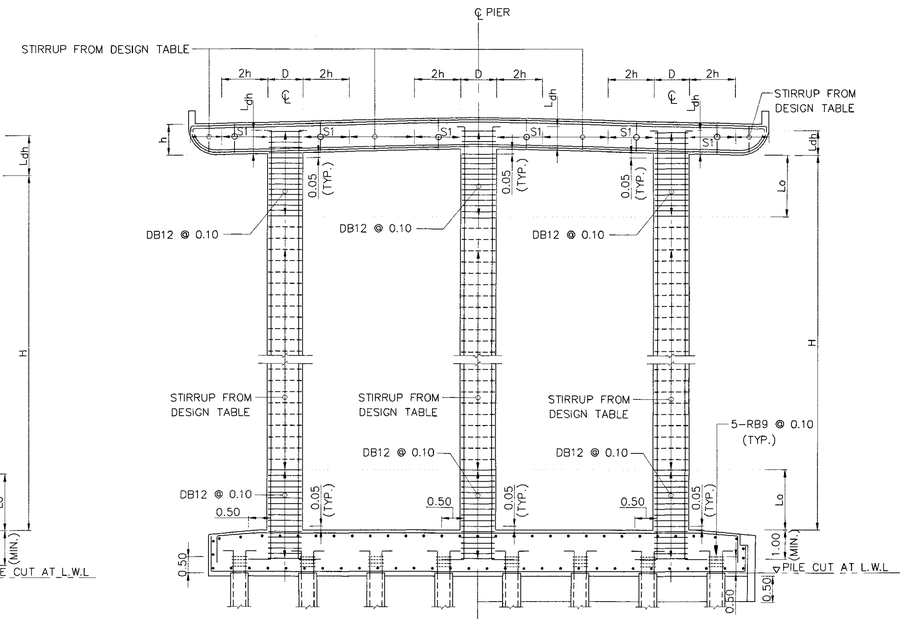

MULTI-PIER DETAIL
NOT TO SCALE

WHEN THE SPACINGS OF STIRRUPS (S1) ARE FOLLOWING
S1 = MINIMUM SPACING BETWEEN DESIGN TABLE AND,
S1 = 0.175 M., WHEN h = 0.70 M.
= 0.185 M., WHEN h = 0.75 M.
= 0.200 M., WHEN 0.80 ≤ h ≤ 1.90 M.

6.2.5 CONJUNCTION REGIONS (TEE JOINTS) ARE NECESSARY TO IMPROVE CONFINEMENT AS FOLLOWS :

6.2.5.1 THE ANCHORAGE LENGTHS FOR COLUMN-CAP BEAM CONNECTIONS ARE EQUAL TO TWICE THE DEPTH OF THE BEAM (2h)

6.2.5.2 COLUMNS ARE CONFINED AT THE END LENGTH (Lo)

MAX. PIER HEIGHT (H)	6.00	7.00	8.00	9.00	10.00	11.00	12.00	13.00	14.00	15.00	16.00	17.00	18.00	19.00	20.00
END REGION LENGTH (Lo)	1.00	1.20	1.35	1.50	1.70	1.85	2.00	2.20	2.35	2.50	2.70	2.85	3.00	3.20	3.35

6.2.5.3 L_{dh} SHALL BE EXTENED INTO CAP BEAM FOR AT LEAST 1.00 M.

7. FOUNDATION DETAILS

7.1 PILE FOUNDATION

7.1.1 PILES SHALL BE DRIVEN TO A DEPTH WHERE SCOUR WILL NOT AFFECT ITS CAPACITY AND HAVE A MINIMUM EMBEDED LENGTH OF 3.00 M.

7.1.2 IN CASE OF PARTLY-EMBEDDED VERTICAL DRIVEN PILE, THE LENGTH BETWEEN BOTTOM FOUNDATION ELEVATION AND GROUND ELEVATION (FREE STANDING HEIGHT) SHALL BE INDICATED AND APPROVED BY ENGINEER

7.1.3 FREE STANDING HEIGHT OF PILE SHALL NOT EXCEED 3.00 M. FOR OTHER SUITABLE FREE STANDING HEIGHT SHALL BE DESIGNED.

7.2 SPREAD FOUNDATION

7.2.1 TOP ELEVATION OF SPREAD FOUNDATION SHALL BE LOCATED LOWER THAN GROUND ELEVATION AT LEAST 1.00 M. (LOCATED ON STIFF SOIL LAYER) AND AT LEAST 2.50 M. DEEP FROM THE CANAL WHERE SCOUR WILL NOT AFFECT. THE ALLOWABLE SOIL BEARING CAPACITY UNDER THE SPREAD FOUNDATION SHALL BE MORE THAN 20 TONS PER SQ.M.(0.20 MPa)

7.2.2 SPREAD FOOTINGS FOUNDATIONS ARE NOT RECOMMENDED WHERE LIQUEFIABLE SOILS (SILKY CLAY) OCCUR UNLESS THE MAXIMUM DEPTH OF LIQUEFACTION OR SOIL IMPROVEMENT TECHNIQUES ARE USED TO MITIGATE THE EFFECTS OF LIQUEFACTION (AASHTO LRFD 2012, ARTICLE 10.5.4.2)

7.2.3 10 CM. THICKNESS OF LEAN CONCRETE SHALL BE POURED AT LEAST 10 CM. WIDER THAN THE FOOTING ALL AROUND.

7.3 SEISMIC REQUIREMENTS OF PILES SHALL COMPLY WITH THE REQUIREMENTS SPECIFIED IN ARTICLE 5.13.4.6 AASHTO LRFD (2012)

NOTES :

1. ALL DIMENSIONS SHOWN ARE IN METERS UNLESS OTHERWISE INDICATED.
2. THE GENERAL NOTES ARE RECOMMENDED UNLESS OTHERWISE SPECIFIED IN THE DRAWING
3. THE SKEW ANGLE (Θ) IS THE ANGLE IN DEGREES BETWEEN THE DIRECTION OF THE CANAL AND A LINE PERPENDICULAR TO THE ROADWAY

REV.	REVISION	SIGNATURE	DATE
REV.1	REVISION 1/2017		JUN 2017

KINGDOM OF THAILAND
MINISTRY OF TRANSPORT
DEPARTMENT OF HIGHWAYS

STANDARD DRAWING
STRUCTURAL NOTES
GENERAL NOTES – III

DESIGNED : D.O.H. & CONSULTANTS **CHECKED :** BUREAU OF LOCATION & DESIGN **DATE :** OCT 2015

SUBMITTED : (DIRECTOR OF LOCATION & DESIGN BUREAU) **SCALE :** AS SHOWN

APPROVED : (FOR DIRECTOR GENERAL) **DWG NO.** GN-003

SHEET NO. 202/R1

SECTION 1) BRIDGE SPAN NOT MORE THAN 20.00 M.

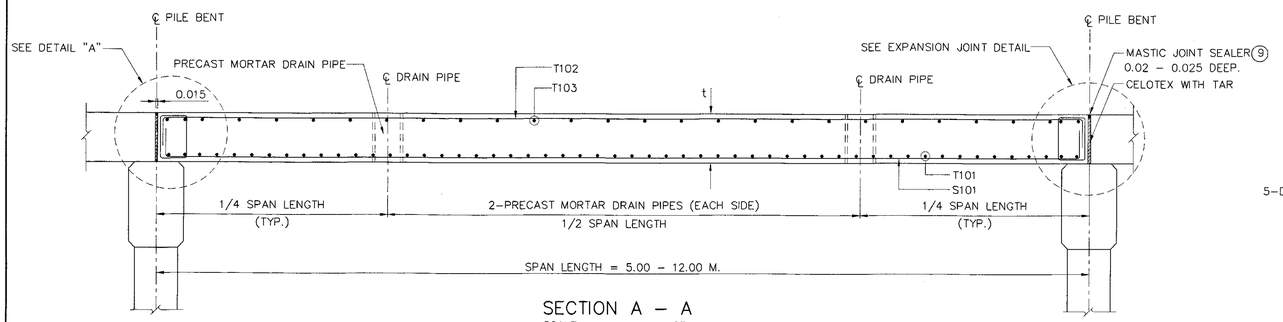

SECTION A – A
SCALE 1 : 25

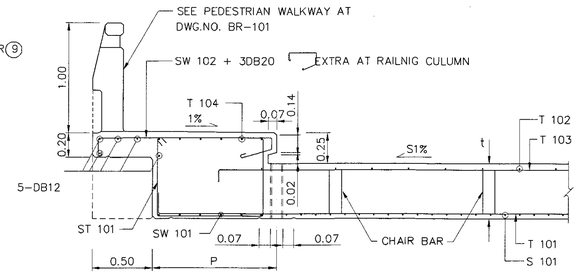

SECTION B – B
SCALE 1 : 25

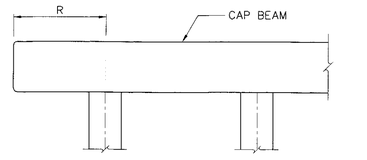

OVERHANGING CAP BEAM DETAIL
NOT TO SCALE

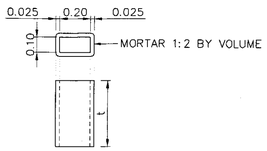

PRECAST MORTAR DRAIN PIPE
SCALE 1 : 20

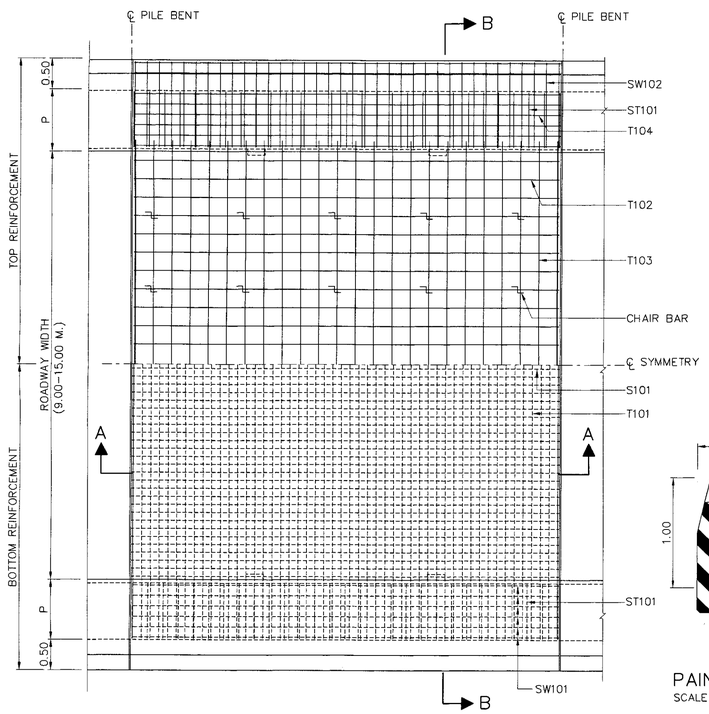

REINFORCEMENT PLAN
SCALE 1 : 50

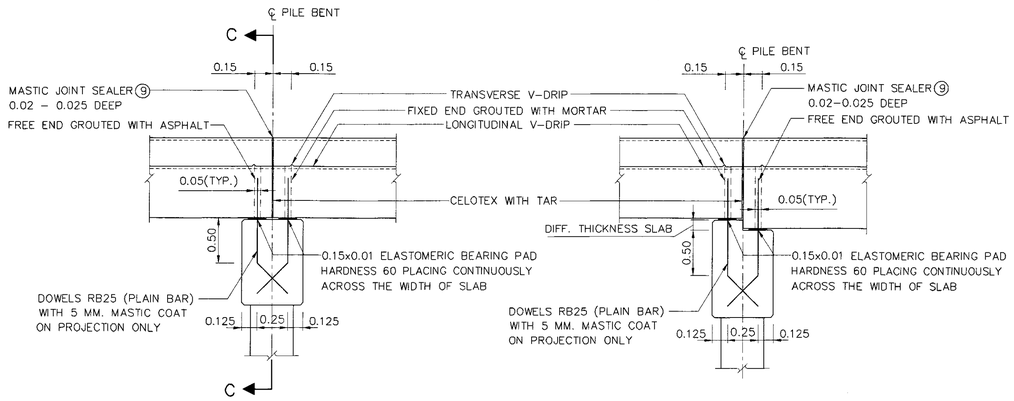

SAME SPAN LENGTH

DIFFERENTIAL SPAN LENGTH

EXPANSION JOINT DETAIL
SCALE 1 : 25

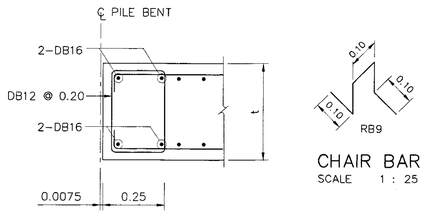

DETAIL "A"
SCALE 1 : 10

CHAIR BAR
SCALE 1 : 25

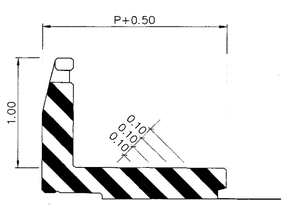

PAINTING AT BRIDGE END
SCALE 1 : 25

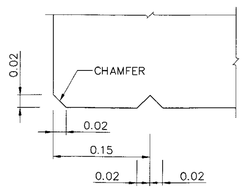

TYPICAL WATER DRIP DETAIL
NOT TO SCALE

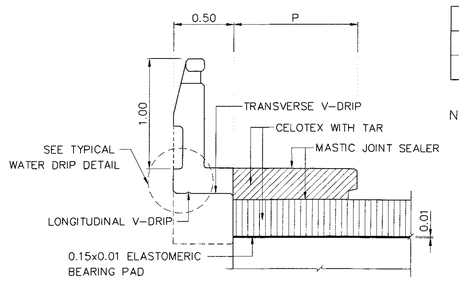

SECTION C – C (WITH SIDEWALK)
SCALE 1 : 25

TABLE OF SLAB THICKNESS							
SPAN LENGTH (M.)	5.00	6.00	7.00	8.00	9.00	10.00	12.00
THICKNESS, t (M.)	0.32	0.36	0.39	0.43	0.47	0.53	0.60

NOTES :

1. ALL DIMENSIONS SHOWN ARE IN METERS UNLESS OTHERWISE INDICATED.
2. DESIGN LIVE LOAD : HL–93.
3. A MINIMUM ULTIMATE COMPRESSIVE STRENGTH FOR A 150x150x150 MM. CUBE AT 28 DAYS AS FOLLOWS:
   A) FOR SLAB TYPE BRIDGE 35 MPa. (357 KG/CM 2)
   B) FOR SIDEWALK AND BARRIER 35 MPa. (357 KG/CM 2)
4. REBAR SIZES SMALLER THAN 12 MM. SHALL BE TIS 20 GRADE SR 24 PLAIN ROUND BARS, OTHERS SHALL BE TIS 24 GRADE SD 40 DEFORMED BARS UNLESS OTHERWISE INDICATED.
5. BAR MARK T 101 MAY BE TAKEN OUT ONE BAR ON EACH SIDE OF THE BRIDGE WHEREVER THEY PASS THROUGH DRAIN PIPES. IF THE LOCATIONS OF THESE BARS ARE NEAR V–DRIP SUCH THAT CONCRETE COVER IS NOT ADEQUATE, THEY SHALL BE PLACED ON TOP OF ST 101. OTHER BARS WHENEVER PASS THROUGH DRAIN PIPE SHALL BE BENT ALONG THE PIPES.
6. CLEAR CONCRETE COVER FOR TOP REINFORCEMENT IN SLAB BRIDGE SHALL BE 40 MM. ELSEWHERE OF SLAB BRIDGE AND SIDEWALK POSTS AND RAILING SHALL BE 30 MM.
7. R = 0.50 M. FOR THE BRIDGE WITHOUT SIDEWALK (P = 0.00). FOR THE BRIDGE WITH SIDEWALK OF P = 0.50 AND 1.00, R = 0.50 M. AND 1.00 M., RESPECTIVELY.
8. PAINTING SHALL BE PROVIDED ON ALL SURFACES AT BRIDGE ENDS WHICH ARE EXPOSED TO TRAFFIC. WHITE AND BLACK COLOURS SHALL BE PAINTED ALTERNATELY ; WHITE COLOUR SHALL BE LIGHT REFLECTED TYPE.
9. REPLACE MASTIC JOINT SEALER WITH COMPRESSION SEAL FOR CONCRETE SURFACE WITHOUT ASPHALTIC TOPPING

TABLE OF SLAB REINFORCEMENT														
BAR BENDING DIAGRAMS	BAR MARK	SPAN 5.00 M.		SPAN 6.00 M.		SPAN 7.00 M.		SPAN 8.00 M.		SPAN 9.00 M.		SPAN 10.00 M.		SPAN 12.00 M.	
		DB	@	DB	@	DB	@	DB	@	DB	@	DB	@	DB	@
	S101	25	0.14	25	0.14	25	0.125	25	0.12	25	0.11	25	0.10	25	0.08
	ST101	12	0.20	12	0.20	12	0.20	12	0.20	12	0.20	12	0.20	12	0.20
	SW101	25	0.14	25	0.14	25	0.125	25	0.12	25	0.10*	25	0.10*	25	0.08*
	SW102	12	0.20	12	0.20	12	0.20	12	0.20	12	0.20	12	0.20	12	0.20
	T101	16	0.275	16	0.275	16	0.25	16	0.25	16	0.25	16	0.20	16	0.20
	T102	12	0.30	12	0.30	12	0.30	12	0.30	12	0.30	12	0.30	12	0.30
	T103	12	0.30	12	0.30	12	0.30	12	0.30	12	0.30	12	0.30	12	0.30
	T104	12	0.20	12	0.20	12	0.20	12	0.20	12	0.20	12	0.20	12	0.20

REMARK: * THE BRIDGE WITHOUT SIDEWALK, USE DB25 @ 0.05

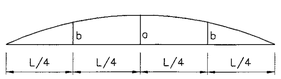

TABLE OF DEAD LOAD CAMBER		
SPAN	CAMBER	
	a	b
5.00	0.0024	0.0016
6.00	0.0037	0.0026
7.00	0.0058	0.0041
8.00	0.0080	0.0056
9.00	0.0128	0.0091
10.00	0.0165	0.0117
12.00	0.0319	0.0227

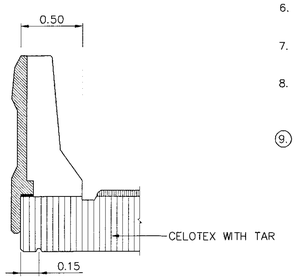

SECTION C – C (WITHOUT SIDEWALK)
SCALE 1 : 25

REV.	REVISION	SIGNATURE	DATE
REV.1	REVISION 1/2017		JUN 2017

KINGDOM OF THAILAND
MINISTRY OF TRANSPORT
DEPARTMENT OF HIGHWAYS

STANDARD DRAWING
R.C. SLAB BRIDGE
0° SKEW PLAN AND SECTION DETAILS

DESIGNED : D.O.H. & CONSULTANTS **CHECKED :** BUREAU OF LOCATION & DESIGN **DATE :** OCT 2015

SUBMITTED : (DIRECTOR OF LOCATION & DESIGN BUREAU) **SCALE :** AS SHOWN

APPROVED : (FOR DIRECTOR GENERAL) **DWG NO.** SB–101

SHEET NO. 203/RI

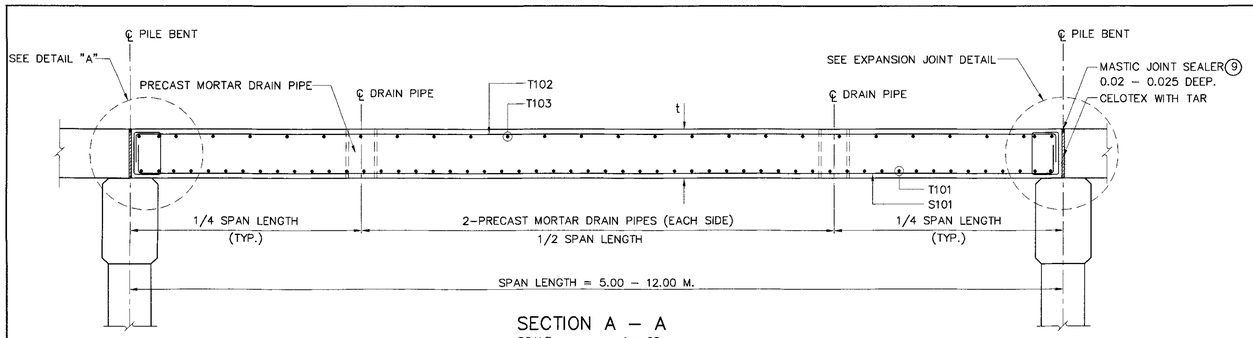

SECTION A – A
SCALE 1 : 25

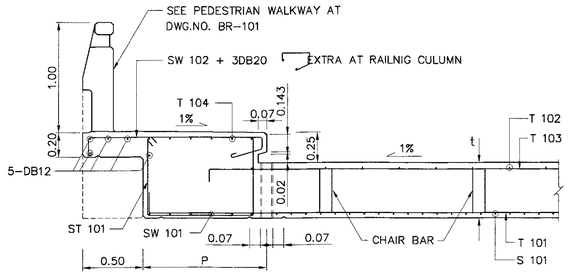

SECTION B – B
SCALE 1 : 25

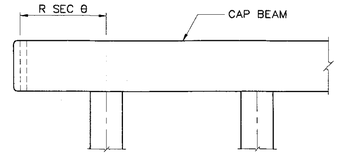

OVERHANGING CAP BEAM DETAIL
NOT TO SCALE

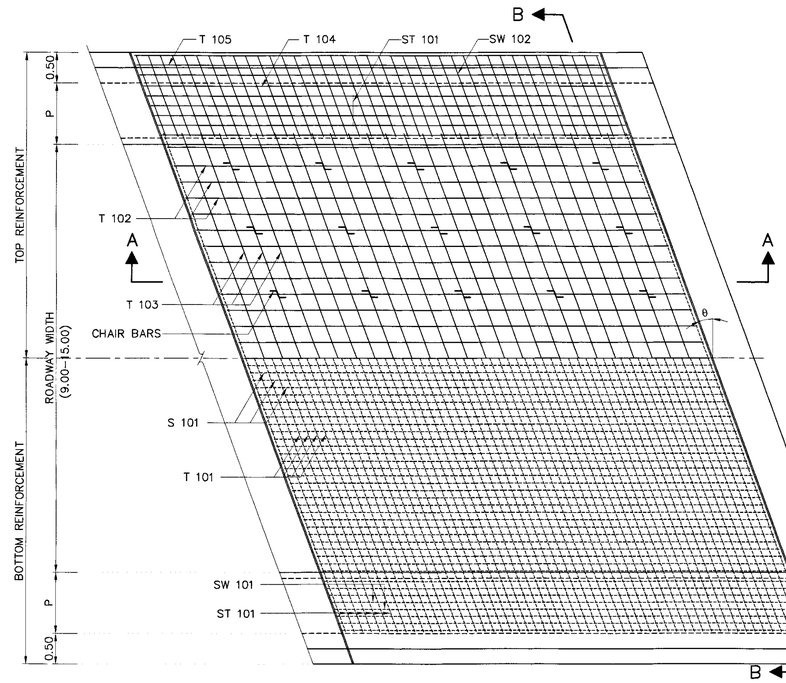

REINFORCEMENT PLAN (FOR 1° < 0–<25°)
SCALE 1 : 50

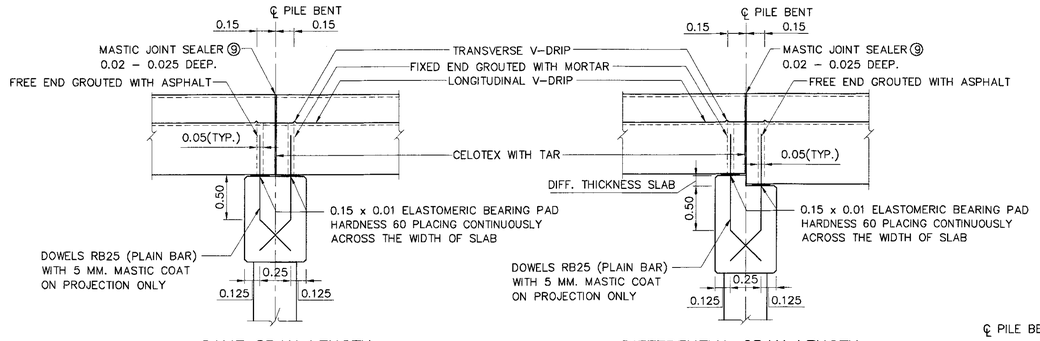

SAME SPAN LENGTH

DIFFERENTIAL SPAN LENGTH

EXPANSION JOINT DETAIL
SCALE 1 : 25

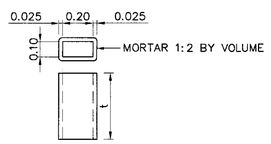

PRECAST MORTAR DRAIN PIPE
SCALE 1 : 20

PAINTING AT BRIDGE END
SCALE 1 : 25

SECTION C – C (WITH SIDEWALK)
SCALE 1 : 25

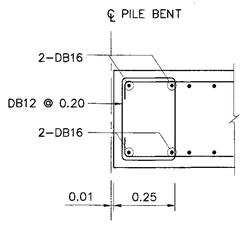

DETAIL "A"
SCALE 1 : 10

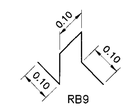

CHAIR BAR
SCALE 1 : 25

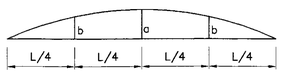

TABLE OF DEAD LOAD CAMBER		
SPAN	CAMBER	
	a	b
5.00	0.0024	0.0016
6.00	0.0037	0.0026
7.00	0.0058	0.0041
8.00	0.0080	0.0056
9.00	0.0128	0.0091
10.00	0.0165	0.0117
12.00	0.0319	0.0227

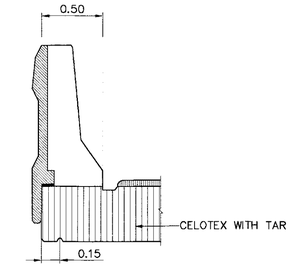

SECTION C – C (WITHOUT SIDEWALK)
SCALE 1 : 25

NOTES :

1. ALL DIMENSIONS SHOWN ARE IN METERS UNLESS OTHERWISE INDICATED.
2. DESIGN LIVE LOAD : HL–93.
3. A MINIMUM ULTIMATE COMPRESSIVE STRENGTH FOR A 150x150x150 MM. CUBE AT 28 DAYS AS FOLLOWS:
   A) FOR SLAB TYPE BRIDGE 35 MPa. (357 KG/CM^2)
   B) FOR SIDEWALK AND BARRIER 35 MPa. (357 KG/CM^2)
4. REBAR SIZES SMALLER THAN 12 MM. SHALL BE TIS 20 GRADE SR 24 PLAIN ROUND BARS, OTHERS SHALL BE TIS 24 GRADE SD 40 DEFORMED BARS UNLESS OTHERWISE INDICATED.
5. BAR MARK T 101 MAY BE TAKEN OUT ONE BAR ON EACH SIDE OF THE BRIDGE WHEREVER THEY PASS THROUGH DRAIN PIPES. IF THE LOCATIONS OF THESE BARS ARE NEAR V–DRIP SUCH THAT CONCRETE COVER IS NOT ADEQUATE, THEY SHALL BE PLACED ON TOP OF ST 101. OTHER BARS WHENEVER PASS THROUGH DRAIN PIPE SHALL BE BENT ALONG THE PIPES.
6. CLEAR CONCRETE COVER FOR TOP REINFORCEMENT IN SLAB BRIDGE SHALL BE 40 MM. ELSEWHERE OF SLAB BRIDGE AND SIDEWALK POSTS AND RAILING SHALL BE 30 MM.
7. R = 0.50 M. FOR THE BRIDGE WITHOUT SIDEWALK (P = 0.00). FOR THE BRIDGE WITH SIDEWALK OF P = 0.50 AND 1.00, R = 0.50 M. AND 1.00 M., RESPECTIVELY.
8. PAINTING SHALL BE PROVIDED ON ALL SURFACES AT BRIDGE ENDS WHICH ARE EXPOSED TO TRAFFIC. WHITE AND BLACK COLOURS SHALL BE PAINTED ALTERNATELY ; WHITE COLOUR SHALL BE LIGHT REFLECTED TYPE.
9. ⑨ REPLACE MASTIC JOINT SEALER WITH COMPRESSION SEAL FOR CONCRETE SURFACE WITHOUT ASPHALTIC TOPPING

TABLE OF SLAB THICKNESS							
SPAN LENGTH (M.)	5.00	6.00	7.00	8.00	9.00	10.00	12.00
THICKNESS,t (M.)	0.32	0.36	0.39	0.43	0.47	0.53	0.60

TABLE OF SEC θ						
θ , DEGREE	0	5	10	15	20	25
SEC θ	1.0000	1.0038	1.0154	1.0353	1.0642	1.1034

TABLE OF SLAB REINFORCEMENT

BAR BENDING DIAGRAMS	BAR MARK	SPAN 5.00 M.		SPAN 6.00 M.		SPAN 7.00 M.		SPAN 8.00 M.		SPAN 9.00 M.		SPAN 10.00 M.		SPAN 12.00 M.	
		DB	@	DB	@	DB	@	DB	@	DB	@	DB	@	DB	@
	S101	25	0.14	25	0.14	25	0.125	25	0.12	25	0.11	25	0.10	25	0.08
	ST101	12	0.20	12	0.20	12	0.20	12	0.20	12	0.20	12	0.20	12	0.20
	SW101	25	0.14	25	0.14	25	0.125	25	0.12	25	0.10*	25	0.10*	25	0.08*
	SW102	12	0.20	12	0.20	12	0.20	12	0.20	12	0.20	12	0.20	12	0.20
	T101	16	0.275	16	0.275	16	0.25	16	0.25	16	0.25	16	0.20	16	0.20
	T102	12	0.30	12	0.30	12	0.30	12	0.30	12	0.30	12	0.30	12	0.30
	T103	12	0.30	12	0.30	12	0.30	12	0.30	12	0.30	12	0.30	12	0.30
	T104	12	0.20	12	0.20	12	0.20	12	0.20	12	0.20	12	0.20	12	0.20

REMARK: * THE BRIDGE WITHOUT SIDEWALK, USE DB25 @ 0.05

KINGDOM OF THAILAND
MINISTRY OF TRANSPORT
DEPARTMENT OF HIGHWAYS

STANDARD DRAWING
R.C. SLAB BRIDGE
1°–25° SKEW PLAN AND SECTION DETAILS

DESIGNED : D.O.H. & CONSULTANTS	CHECKED : BUREAU OF LOCATION & DESIGN	DATE : OCT 2015	
SUBMITTED : (DIRECTOR OF LOCATION & DESIGN BUREAU)		SCALE : AS SHOWN	
APPROVED : (FOR DIRECTOR GENERAL)		DWG NO. SB–102	
		SHEET NO. 204/RI	

REV.	REVISION	SIGNATURE	DATE
REV.1	REVISION 1/2017		JUN 2017

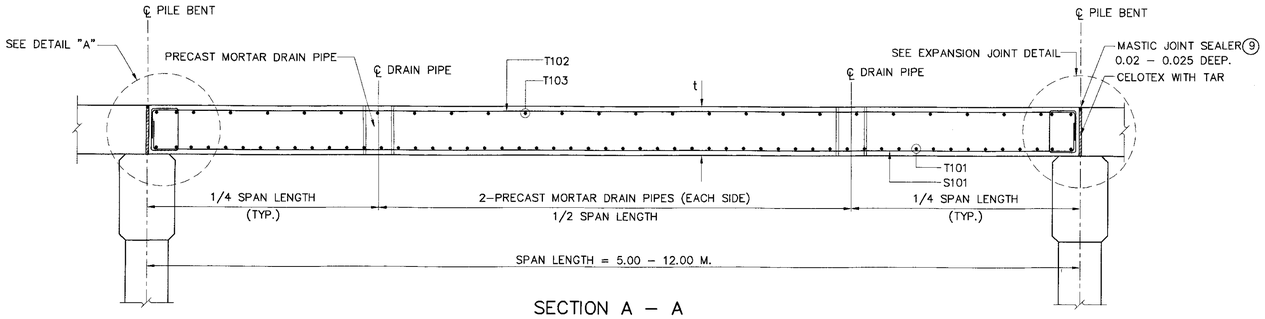

SECTION A – A
SCALE 1 : 25

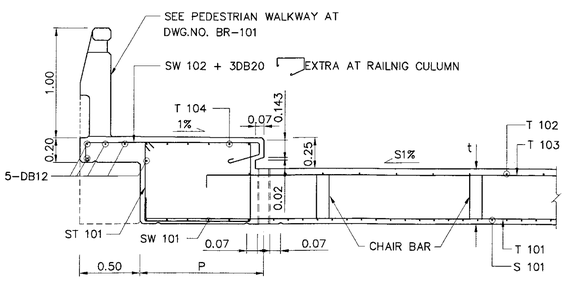

SECTION B – B
SCALE 1 : 25

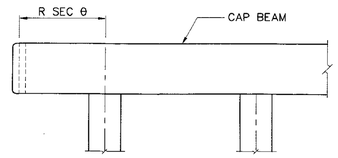

OVERHANGING CAP BEAM DETAIL
NOT TO SCALE

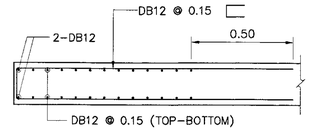

SECTION D – D
SCALE 1 : 15

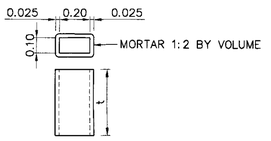

PRECAST MORTAR DRAIN PIPE
SCALE 1 : 20

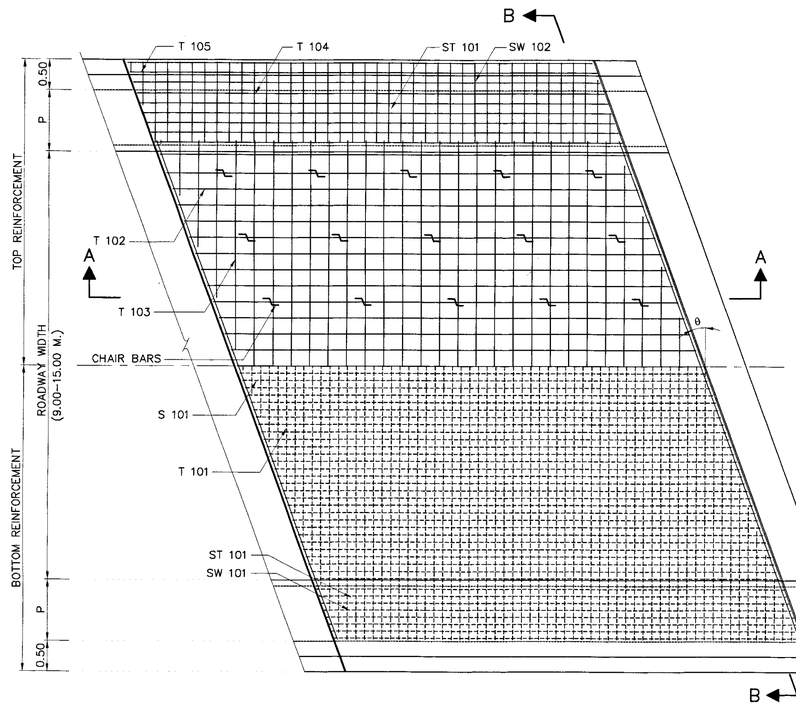

REINFORCEMENT PLAN (FOR 25° < θ < 45°)
SCALE 1 : 50

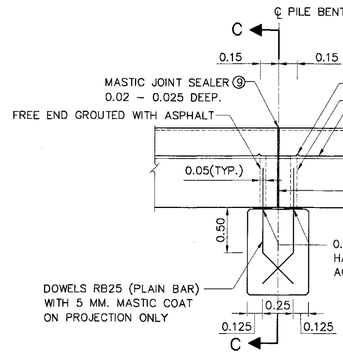

SAME SPAN LENGTH

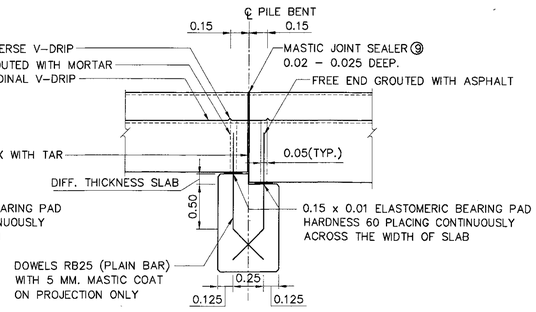

DIFFERENTIAL SPAN LENGTH

EXPANSION JOINT DETAIL
SCALE 1 : 25

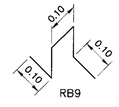

CHAIR BAR
SCALE 1 : 25

SECTION C – C (WITH SIDEWALK)
SCALE 1 : 25

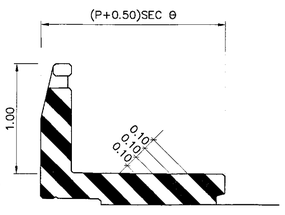

PAINTING AT BRIDGE END
SCALE 1 : 25

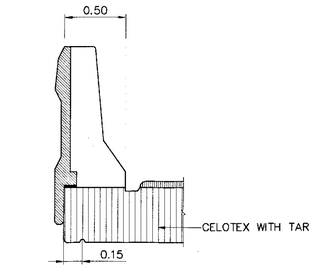

SECTION C – C (WITHOUT SIDEWALK)
SCALE 1 : 25

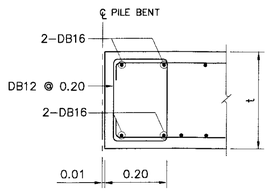

DETAIL "A"
SCALE 1 : 15

NOTES :

1. ALL DIMENSIONS SHOWN ARE IN METERS UNLESS OTHERWISE INDICATED.
2. DESIGN LIVE LOAD : HL–93.
3. A MINIMUM ULTIMATE COMPRESSIVE STRENGTH FOR A 150x150x150 MM. CUBE AT 28 DAYS AS FOLLOWS:
   A) FOR SLAB TYPE BRIDGE 35 MPa. (357 KG/CM^2)
   B) FOR SIDEWALK AND BARRIER 35 MPa. (357 KG/CM^2)
4. REBAR SIZES SMALLER THAN 12 MM. SHALL BE TIS 20 GRADE SR 24 PLAIN ROUND BARS, OTHERS SHALL BE TIS 24 GRADE SD 40 DEFORMED BARS UNLESS OTHERWISE INDICATED.
5. BAR MARK T 101 MAY BE TAKEN OUT ONE BAR ON EACH SIDE OF THE BRIDGE WHEREVER THEY PASS THROUGH DRAIN PIPES. IF THE LOCATIONS OF THESE BARS ARE NEAR V–DRIP SUCH THAT CONCRETE COVER IS NOT ADEQUATE, THEY SHALL BE PLACED ON TOP OF ST 101. OTHER BARS WHENEVER PASS THROUGH DRAIN PIPE SHALL BE BENT ALONG THE PIPES.
6. CLEAR CONCRETE COVER FOR TOP REINFORCEMENT IN SLAB BRIDGE SHALL BE 40 MM. ELSEWHERE OF SLAB BRIDGE AND SIDEWALK POSTS AND RAILING SHALL BE 30 MM.
7. R = 0.50 M. FOR THE BRIDGE WITHOUT SIDEWALK (P = 0.00). FOR THE BRIDGE WITH SIDEWALK OF P = 0.50 AND 1.00, R = 0.50 M. AND 1.00 M., RESPECTIVELY.
8. PAINTING SHALL BE PROVIDED ON ALL SURFACES AT BRIDGE ENDS WHICH ARE EXPOSED TO TRAFFIC. WHITE AND BLACK COLOURS SHALL BE PAINTED ALTERNATELY ; WHITE COLOUR SHALL BE LIGHT REFLECTED TYPE.
9. REPLACE MASTIC JOINT SEALER WITH COMPRESSION SEAL FOR CONCRETE SURFACE WITHOUT ASPHALTIC TOPPING

TABLE OF SEC θ					
θ , DEGREE	25	30	35	40	45
SEC θ	1.1034	1.1547	1.2208	1.3054	1.4142

TABLE OF SLAB THICKNESS							
SPAN	5.00	6.00	7.00	8.00	9.00	10.00	12.00
THICKNESS, t	0.32	0.36	0.39	0.43	0.47	0.53	0.60

TABLE OF SLAB REINFORCEMENT															
BAR BENDING DIAGRAMS	BAR MARK	SPAN 5.00 M.		SPAN 6.00 M.		SPAN 7.00 M.		SPAN 8.00 M.		SPAN 9.00 M.		SPAN 10.00 M.		SPAN 1200 M.	
		DB	@	DB	@	DB	@	DB	@	DB	@	DB	@	DB	@
	S101	25	0.15	25	0.15	25	0.125	25	0.125	25	0.10	25	0.10	25	0.10
	ST101	12	0.20	12	0.20	12	0.20	12	0.20	12	0.10	12	0.10	12	0.10
	SW101	25	0.15	25	0.15	25	0.125	25	0.10	25	0.10*	25	0.10*	25	0.10*
	SW102	12	0.20	12	0.20	12	0.20	12	0.20	12	0.20	12	0.20	12	0.20
	T101	12	0.10	12	0.10	12	0.10	12	0.10	12	0.10	12	0.10	12	0.10
	T102	12	0.20	12	0.20	12	0.20	12	0.20	12	0.20	12	0.20	16	0.20
	T103	12	0.20	12	0.20	12	0.20	12	0.20	12	0.20	12	0.20	16	0.20
	T104	12	0.20	12	0.20	12	0.20	12	0.20	12	0.20	12	0.20	16	0.20

REMARK: * THE BRIDGE WITHOUT SIDEWALK, USE DB25 @ 0.05

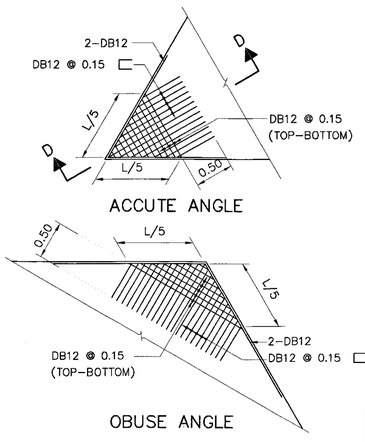

ACCUTE ANGLE

OBUSE ANGLE

EXTRA REINF. FOR SKEW BRIDGE
NOT TO SCALE

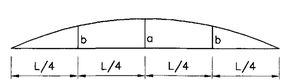

TABLE OF DEAD LOAD CAMBER		
SPAN	CAMBER	
	a	b
5.00	0.0014	0.0010
6.00	0.0023	0.0016
7.00	0.0033	0.0023
8.00	0.0055	0.0039
9.00	0.0078	0.0056
10.00	0.0104	0.0074
12.00	0.0156	0.0111

REV.	REVISION	SIGNATURE	DATE
REV.1	REVISION 1/2017		JUN 2017

KINGDOM OF THAILAND
MINISTRY OF TRANSPORT
DEPARTMENT OF HIGHWAYS

STANDARD DRAWING
R.C. SLAB BRIDGE
26°–45° SKEW PLAN AND SECTION DETAILS

DESIGNED : D.O.H. & CONSULTANTS **CHECKED :** BUREAU OF LOCATION & DESIGN **DATE :** OCT 2015

SUBMITTED : (DIRECTOR OF LOCATION & DESIGN BUREAU) **SCALE :** AS SHOWN

APPROVED : (FOR DIRECTOR GENERAL) **DWG NO.** SB–103

SHEET NO. 205/R1

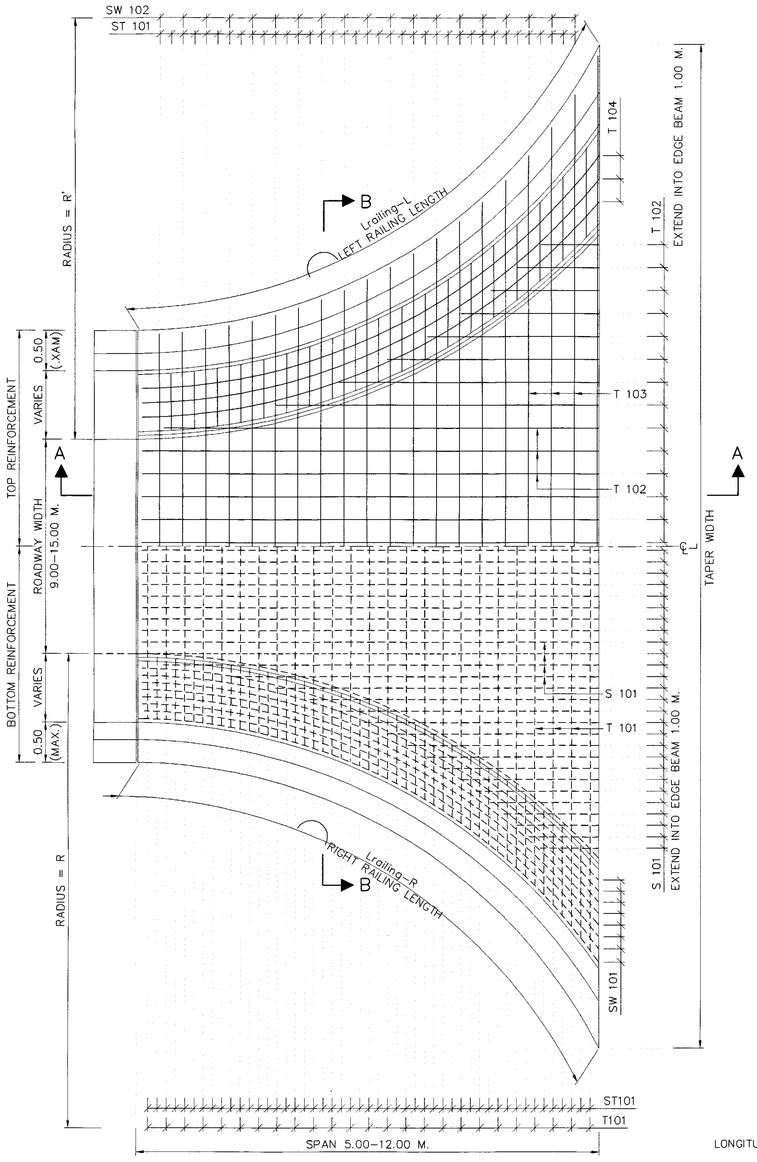

TOP & BOTTOM REINFORCEMENT
SCALE 1 : 40

TABLE OF 0° SKEW TAPERED SLAB BRIDGE								
SPAN (M.)		5.00	6.00	7.00	8.00	9.00	10.00	12.00
R (M.)		6.25	7.50	8.75	10.00	11.25	12.50	15.00
R' (M.)		6.25	7.50	8.75	10.00	11.25	12.50	15.00
Lrailing-L,R (M.)	0.50 SIDEWALK	6.022	7.169	8.321	9.474	10.629	11.785	14.085
	1.00 SIDEWALK	5.843	6.928	8.047	9.181	10.323	11.469	13.754
	1.50 SIDEWALK	5.859	7.398	8.642	9.665	10.745	11.852	14.087
L (M.)	0.50 SIDEWALK	15.75	16.720	17.70	18.69	19.680	20.670	22.610
	1.00 SIDEWALK	19.30	19.730	20.490	21.35	22.25	23.19	25.040
	1.50 SIDEWALK	20.00	23.00	22.90	23.08	23.710	24.49	26.150

TABLE OF 25° SKEW TAPERED SLAB BRIDGE								
SPAN (M.)		5.00	6.00	7.00	8.00	9.00	10.00	12.00
R (M.)		6.25	7.50	8.75	10.00	11.25	12.50	15.00
R' (M.)		2.00	4.60	6.70	10.00	11.25	12.50	15.00
LRAILING-L (M.)	0.50 SIDEWALK	0.578	1.606	2.649	3.873	4.725	5.786	7.979
	1.00 SIDEWALK	0	0.738	1.806	3.216	3.893	4.962	7.162
	1.50 SIDEWALK	0	0.969	2.123	3.285	4.204	5.288	7.533
LRAILING-R (M.)	0.50 SIDEWALK	6.255	7.402	8.552	9.707	10.862	12.017	14.317
	1.00 SIDEWALK	6.755	7.438	8.557	9.691	10.832	11.979	14.264
	1.50 SIDEWALK	7.060	8.140	9.385	10.407	11.488	12.595	14.829
L (M.)	0.50 SIDEWALK	13.100	13.770	14.510	15.420	15.960	16.790	18.570
	1.00 SIDEWALK	15.820	16.010	16.640	18.570	17.980	18.790	20.560
	1.50 SIDEWALK	16.00	17.720	18.280	18.940	19.070	19.820	21.580

TABLE OF SLAB THICKNESS							
SPAN	5.00	6.00	7.00	8.00	9.00	10.00	12.00
THICKNESS, t	0.32	0.36	0.39	0.43	0.47	0.53	0.60

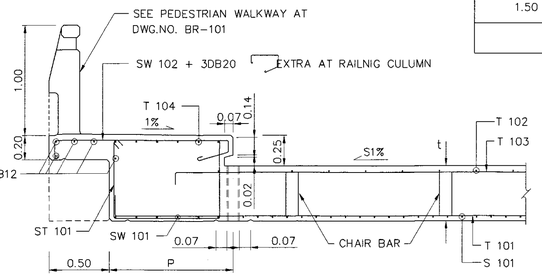

SECTION B – B
SCALE 1 : 25

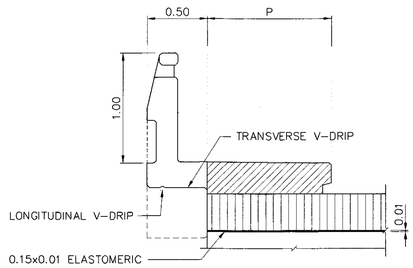

SECTION C – C
SCALE 1 : 25

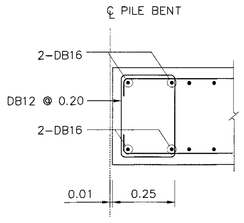

DETAIL "A"
SCALE 1 : 10

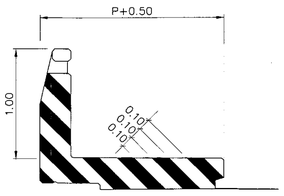

PAINTING AT BRIDGE END
SCALE 1 : 25

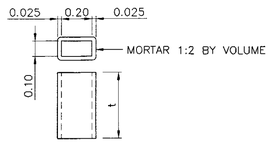

PRECAST MORTAR DRAIN PIPE
SCALE 1 : 20

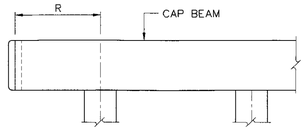

OVERHANGING CAP BEAM DETAIL
NOT TO SCALE

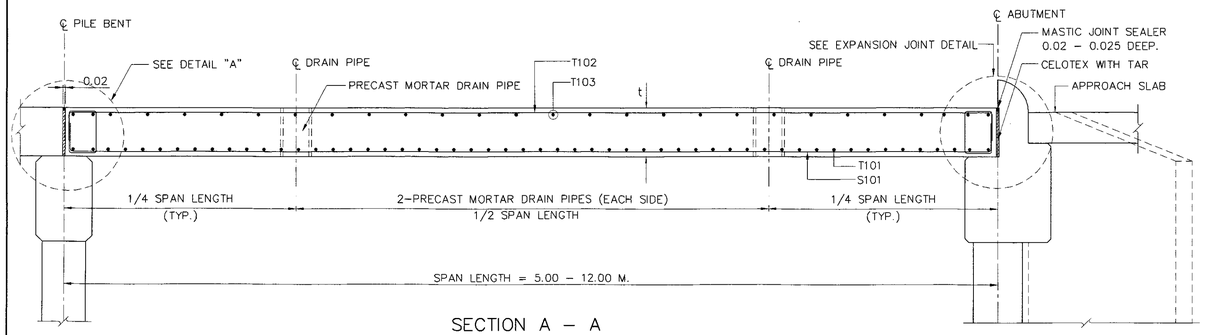

SECTION A – A
SCALE 1 : 25



TABLE OF DEAD LOAD CAMBER		
SPAN	CAMBER	
	a	b
5.00	0.0016	0.0011
6.00	0.0025	0.0018
7.00	0.0041	0.0030
8.00	0.0065	0.0046
9.00	0.0086	0.0061
10.00	0.0011	0.0080
12.00	0.0016	0.0011

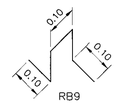

CHAIR BAR
SCALE 1 : 25

TABLE OF SLAB REINFORCEMENT															
BAR BENDING DIAGRAMS	BAR MARK	SPAN 5.00 M.		SPAN 6.00 M.		SPAN 7.00 M.		SPAN 8.00 M.		SPAN 9.00 M.		SPAN 10.00 M.		SPAN 12.00 M.	
		DB	@	DB	@	DB	@	DB	@	DB	@	DB	@	DB	@
	S101	25	0.125	25	0.125	25	0.10	25	0.10	25	0.10	25	0.10	25	0.10
	ST101	12	0.20	12	0.20	12	0.20	12	0.20	12	0.10	12	0.10	12	0.10
	SW102	12	0.20	12	0.20	12	0.20	12	0.20	12	0.20	12	0.20	12	0.20
	T101	12	0.10	12	0.10	12	0.10	12	0.10	12	0.10	12	0.10	25	0.10
	T102	12	0.20	12	0.20	12	0.20	12	0.20	12	0.20	12	0.20	16	0.20
	T103	12	0.20	12	0.20	12	0.20	12	0.20	12	0.20	12	0.20	16	0.20

WIDTH OF SIDEWALK	P	R	BAR MARK	TABLE OF SIDEWALK AND EDGE BEAM REINFORCEMENT											
				SPAN 5.00 M.		SPAN 6.00 M.		SPAN 7.00 M.		SPAN 8.00 M.		SPAN 9.00 M.		SPAN 10.00 M.		SPAN 12.00 M.	
				DB	@	DB	@	DB	@	DB	@	DB	@	DB	@	DB	@
0.50	0.50	0.50	SW101	25	0.125	25	0.125	25	0.10	25	0.10	25	0.10	25	0.10	25	0.10
			T104	12	0.125	12	0.125	12	0.10	12	0.10	12	0.075	12	0.075	12	0.05
1.00	0.50	0.50	SW101	25	0.125	25	0.125	25	0.10	25	0.10	25	0.10*	25	0.10*	25	0.08*
			T104	12	0.125	12	0.125	12	0.10	12	0.10	12	0.075	12	0.075	12	0.05
			T105	12	0.15	12	0.15	12	0.15	12	0.15	12	0.15	12	0.15	12	0.15
1.50	1.00	1.00	SW101	25	0.125	25	0.125	25	0.10	25	0.10	25	0.10	25	0.10	25	0.10
			T104	12	0.125	12	0.125	12	0.10	12	0.10	12	0.075	12	0.075	12	0.05

REMARK: * THE BRIDGE WITHOUT SIDEWALK, USE DB25 @ 0.05

NOTES :

1. ALL DIMENSIONS SHOWN ARE SHOWN IN METERS UNLESS OTHERWISE INDICATED.
2. DESIGN LIVE LOAD : HL-93.
3. A MINIMUM ULTIMATE COMPRESSIVE STRENGTH FOR A 150x150x150 MM. CUBE AT 28 DAYS AS FOLLOWS:
   A) FOR SLAB TYPE BRIDGE 35 MPa. (357 KG/CM^2)
   B) FOR SIDEWALK AND BARRIER 35 MPa. (357 KG/CM^2)
4. REBAR SIZES SMALLER THAN 12 MM. SHALL BE TIS 20 GRADE SR 24 PLAIN ROUND BARS, OTHERS SHALL BE TIS 24 GRADE SD 40 DEFORMED BARS UNLESS OTHERWISE INDICATED.
5. BAR MARK T 101 MAY BE TAKEN OUT ONE BAR ON EACH SIDE OF THE BRIDGE WHEREVER THEY PASS THROUGH DRAIN PIPES. IF THE LOCATIONS OF THESE BARS ARE NEAR V-DRIP SUCH THAT CONCRETE COVER IS NOT ADEQUATE, THEY SHALL BE PLACED ON TOP OF ST 101. OTHER BARS WHENEVER PASS THROUGH DRAIN PIPE SHALL BE BENT ALONG THE PIPES.
6. CLEAR CONCRETE COVER FOR TOP REINFORCEMENT IN SLAB BRIDGE SHALL BE 40 MM. ELSEWHERE OF SLAB BRIDGE AND SIDEWALK POSTS AND RAILING SHALL BE 30 MM.
7. R = 0.50 M. FOR THE BRIDGE WITHOUT SIDEWALK (P = 0.00). FOR THE BRIDGE WITH SIDEWALK OF P = 0.50 AND 1.00, R = 0.50 M. AND 1.00 M., RESPECTIVELY.
8. PAINTING SHALL BE PROVIDED ON ALL SURFACES AT BRIDGE ENDS WHICH ARE EXPOSED TO TRAFFIC. WHITE AND BLACK COLOURS SHALL BE PAINTED ALTERNATELY ; WHITE COLOUR SHALL BE LIGHT REFLECTED TYPE.
9. REPLACE MASTIC JOINT SEALER WITH COMPRESSION SEAL FOR CONCRETE SURFACE WITHOUT ASPHALTIC TOPPING

KINGDOM OF THAILAND
MINISTRY OF TRANSPORT
DEPARTMENT OF HIGHWAYS

STANDARD DRAWING
R.C. SLAB BRIDGE
TAPERED PLAN AND SECTION DETAILS

REV.	REVISION	SIGNATURE	DATE
REV.1	REVISION 1/2017		JUN 2017

DESIGNED : D.O.H. & CONSULTANTS **CHECKED :** BUREAU OF LOCATION & DESIGN **DATE :** OCT 2015

SUBMITTED : (DIRECTOR OF LOCATION & DESIGN BUREAU) **SCALE :** AS SHOWN

APPROVED : (FOR DIRECTOR GENERAL) **DWG NO.** SB-104

SHEET NO. 206/RI

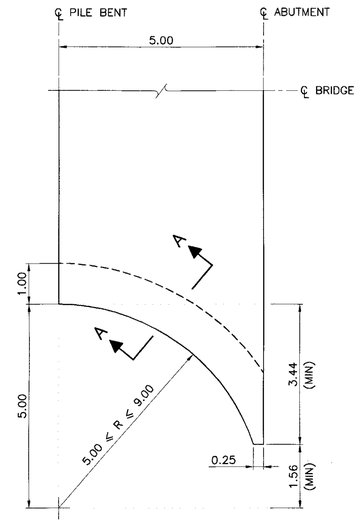

BRIDGE SPAN 5.00 M.

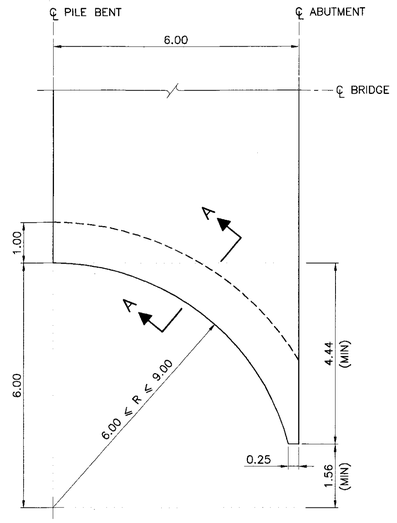

BRIDGE SPAN 6.00 M.

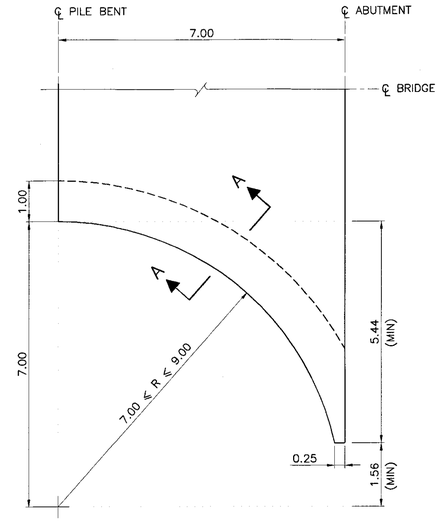

BRIDGE SPAN 7.00 M.

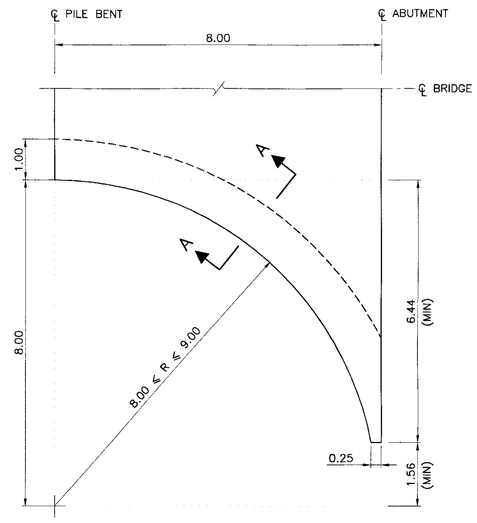

BRIDGE SPAN 8.00 M.

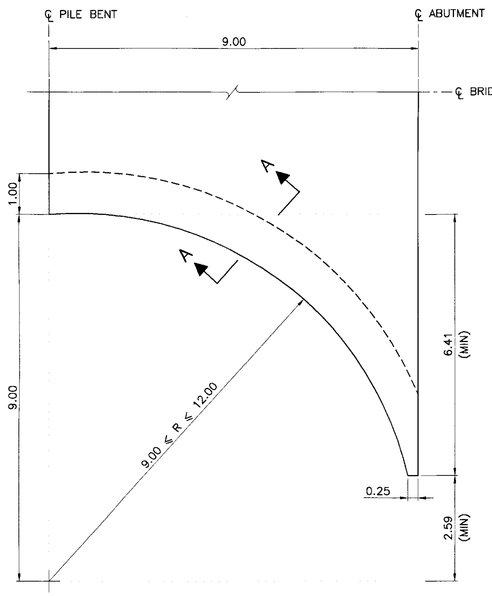

BRIDGE SPAN 9.00 M.

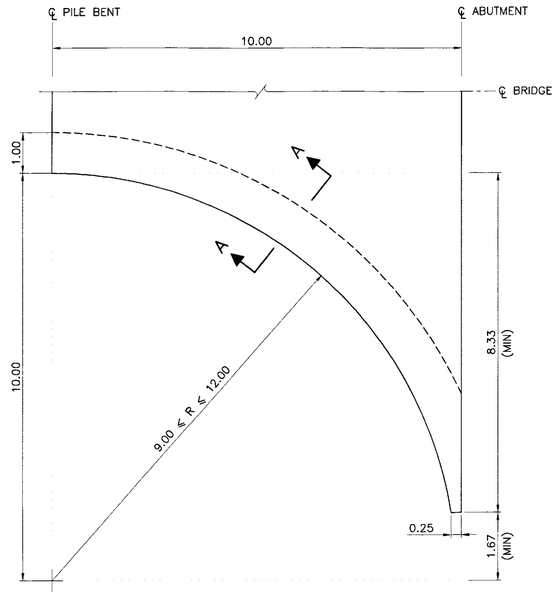

BRIDGE SPAN 10.00 M.

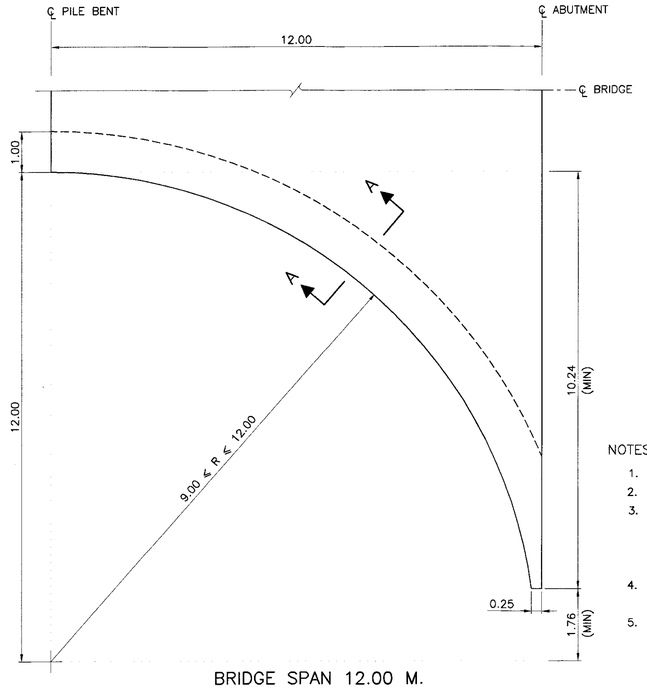

BRIDGE SPAN 12.00 M.

EDGE BEAM OF RC.SLAB BRIDGE PLANS

SCALE 1 : 75

NOTES :

1. ALL DIMENSIONS SHOWN ARE IN METERS UNLESS OTHERWISE INDICATED.
2. DESIGN LIVE LOAD : HL-93.
3. A MINIMUM ULTIMATE COMPRESSIVE STRENGTH FOR A 150x150x150 MM. CUBE AT 28 DAYS AS FOLLOWS:
   A) FOR SLAB TYPE BRIDGE 35 MPa. (357 KG/CM^2)
   B) FOR SIDEWALK AND BARRIER 35 MPa. (357 KG/CM^2)
4. REBAR SIZES SMALLER THAN 12 MM. SHALL BE TIS 20 GRADE SR 24 PLAIN ROUND BARS, OTHERS SHALL BE TIS 24 GRADE SD 40 DEFORMED BARS UNLESS OTHERWISE INDICATED.
5. BAR MARK T 101 MAY BE TAKEN OUT ONE BAR ON EACH SIDE OF THE BRIDGE WHEREVER THEY PASS THROUGH DRAIN PIPES. IF THE LOCATIONS OF THESE BARS ARE NEAR V-DRIP SUCH THAT CONCRETE COVER IS NOT ADEQUATE, THEY SHALL BE PLACED ON TOP OF ST 101. OTHER BARS WHENEVER PASS THROUGH DRAIN PIPE SHALL BE BENT ALONG THE PIPES.
6. CLEAR CONCRETE COVER FOR TOP REINFORCEMENT IN SLAB BRIDGE SHALL BE 40 MM. ELSEWHERE OF SLAB BRIDGE AND SIDEWALK POSTS AND RAILING SHALL BE 30 MM.
7. IN CASE OF R EQUALS TO SPAN LENGTH, CUT THE END OF TAPER
8. THIS DRAWING IS USING IN CONJUNCTION WITH DWG. NO. SB-104

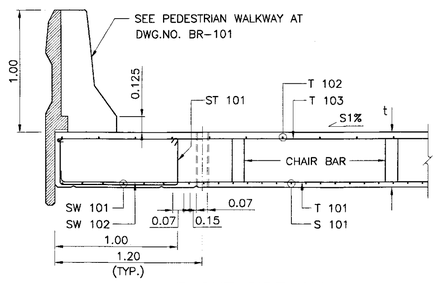

WITHOUT SIDEWALK

SECTION A - A
SCALE 1 : 25

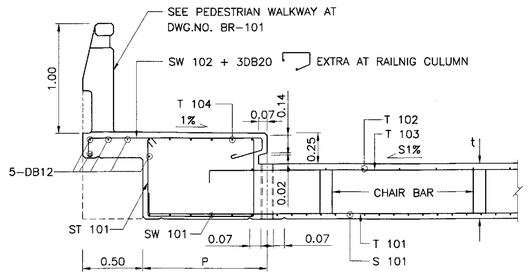

WITH SIDEWALK

TABLE OF SLAB THICKNESS							
SPAN LENGTH (M.)	5.00	6.00	7.00	8.00	9.00	10.00	12.00
THICKNESS,t (M.)	0.32	0.36	0.39	0.43	0.47	0.53	0.60

REV.	REVISION	SIGNATURE	DATE
REV.1	REVISION 1/2017		JUN 2017

KINGDOM OF THAILAND

MINISTRY OF TRANSPORT

DEPARTMENT OF HIGHWAYS

STANDARD DRAWING

R.C. SLAB BRIDGE

TAPERED PLAN AND SECTION DETAILS

EDGE BEAM REINFORCEMENT

DESIGNED : D.O.H. & CONSULTANTS **CHECKED :** BUREAU OF LOCATION & DESIGN **DATE :** OCT 2015

SUBMITTED : (DIRECTOR OF LOCATION & DESIGN BUREAU) **SCALE :** AS SHOWN

APPROVED : (FOR DIRECTOR GENERAL) **DWG NO.** SB-105

SHEET NO. 207/R1

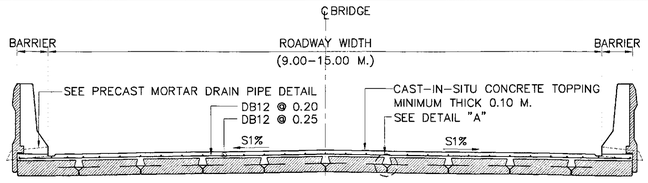

BRIDGE SECTION (WITHOUT SIDEWALK)
SCALE 1 : 50

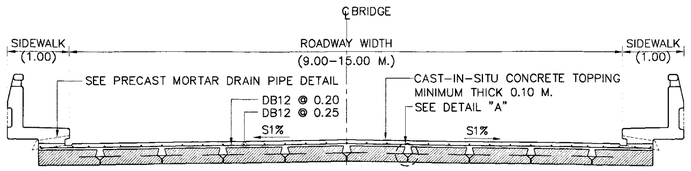

BRIDGE SECTION (1.00 M. SIDEWALK)
SCALE 1 : 50

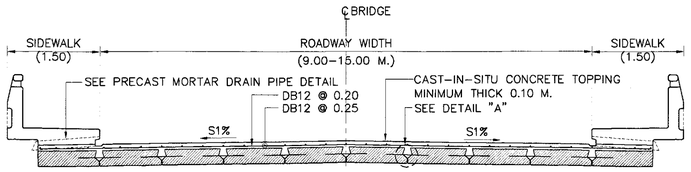

BRIDGE SECTION (1.50 M. SIDEWALK)
SCALE 1 : 50

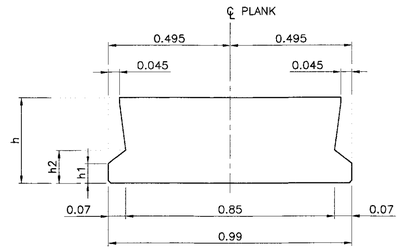

5.00–10.00 M. SPAN

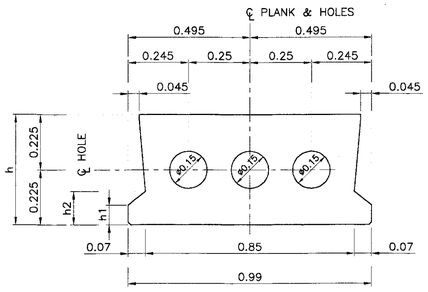

12.00 M. SPAN

INTERIOR GIRDER CROSS SECTIONS
SCALE 1 : 12.5

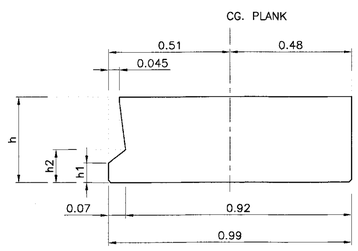

5.00–10.00 M. SPAN

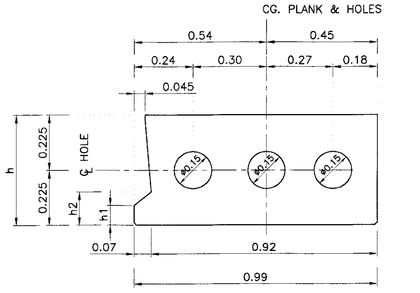

12.00 M. SPAN

EXTERIOR GIRDER CROSS SECTIONS
SCALE 1 : 12.5

TABLE PLANK GIRDER OUTLINE

SPAN (M.)	PLANK DIMENSION (M.)			TOTAL SHEAR CONNECTOR PER GIRDER			
	h	h1	h2	A	B	INTERIOR	EXTERIOR
5.00	0.18	0.05	0.09	0.70	1.80	6	3
6.00	0.21	0.05	0.09	0.70	1.53	8	4
7.00	0.24	0.05	0.09	0.70	1.86	8	4
8.00	0.28	0.05	0.10	0.70	1.65	10	5
9.00	0.31	0.08	0.14	0.50	1.60	12	6
10.00	0.35	0.08	0.14	0.50	1.80	12	6
12.00	0.45	0.08	0.14	0.50	1.83	14	7

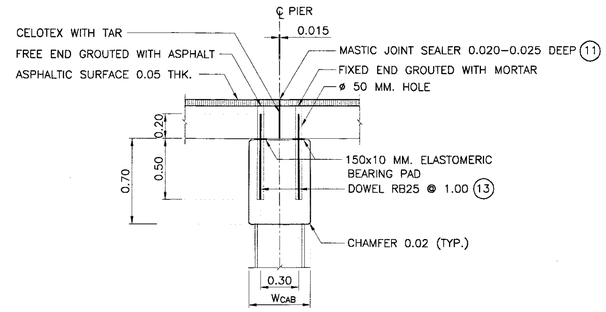

CAP BEAM DETAIL
SCALE 1 : 25

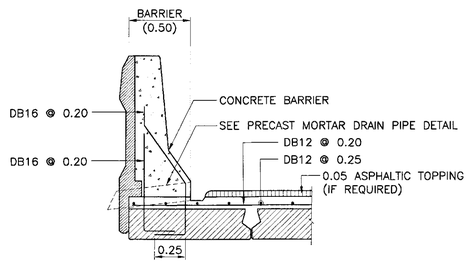

WITHOUT SIDEWALK DETAIL
SCALE 1 : 25

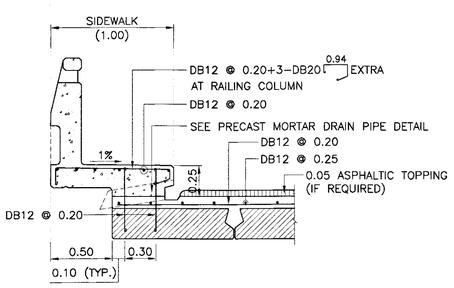

1.00 M. SIDEWALK DETAIL
SCALE 1 : 25

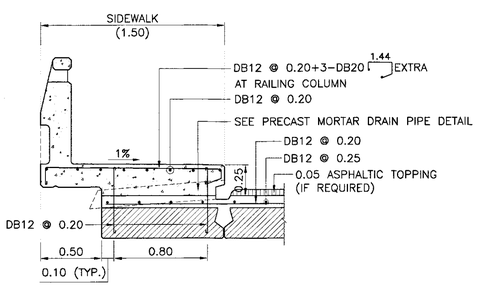

1.50 M. SIDEWALK DETAIL
SCALE 1 : 25

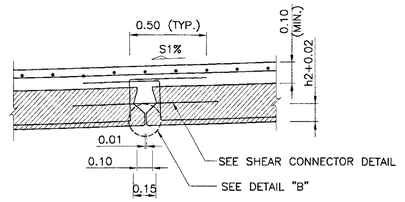

DETAIL "A"
SCALE 1 : 20

NOTES :

1. ALL DIMENSIONS SHOWN ARE IN METERS UNLESS OTHERWISE INDICATED.
2. DESIGN LIVE LOAD : HL–93.
3. A MINIMUM ULTIMATE COMPRESSIVE STRENGTH FOR A 150x150x150 MM. CUBE AT 28 DAYS AS FOLLOWS:
   A) FOR PRESTRESSED PLANK GIRDER 50 MPa. (510 KG/CM^2)
   B) FOR BRIDGE SLAB TOPPING AND SHEAR KEY 40 MPa. (408 KG/CM^2)
   C) FOR SIDEWALK AND BARRIER 35 MPa. (357 KG/CM^2)
4. PRESTRESSING STRANDS MAY BE RELEASED AFTER CONCRETE HAS ATTAINED A MINIMUM ULTIMATE COMPRESSIVE STRENGTH OF 35 MPa. (357 KG/CM^2) FOR THE STANDARD CUBE.
5. REBAR SIZES SMALLER THAN 12 MM. SHALL BE TIS 20 GRADE SR 24 PLAIN ROUND BARS, OTHERS SHALL BE TIS 24 GRADE SD 40 DEFORMED BARS UNLESS OTHERWISE INDICATED.
6. PC. PLANK GIRDER SHALL BE LIFTED AT BOTH ENDS, MIDSPAN LIFTING IS PROHIBITED.
7. THIS TYPE OF PC. PLANK GIRDER MAY BE USED WITH PIERS FOR SLAB BRIDGE HAVING THE SAME SPAN LENGTH.
8. DOWELS FOR HOLDING PC. PLANK GIRDER OVER PIERS SHALL BE PROVIDED AT EVERY ALTERNATE GIRDER.
9. IF PIERS FALL WITHIN THE TRANSITION OF HORIZONTAL CURVE, THE TOP OF CAP BEAM SHALL BE SUPERELEVATED IN ACCORDANCE WITH THE ROADWAY SUPERLEVATION SO THAT THE PC. PLANK GIRDER SHALL BE ON A SMOOTH PLANE. ELEVATION OF FINISHED SURFACE SHALL BE ATTAINED BY ADJUSTING THE CONCRETE TOPPING THIS SHALL BE DONE WITH THE APPROVAL OF THE ENGINEER.
10. CASTING LENGTH OF A GIRDER SHALL BE 1 CM. SHORTER THAN THE SPAN LENGTH.
11. REPLACE MASTIC JOINT SEALER WITH COMPRESSION SEAL FOR CONCRETE SURFACE WITHOUT ASPHALTIC TOPPING.
12. THIS DRAWING IS USED IN CONJUNCTION WITH DWG. NO. PG–102, PG–103 AND PG–104.
13. INSTALL DOWEL BARS AT PIER (ABUTMENT) AND FILL CONCRETE (fcu = 50 MPa) 0.50 M. FROM THE ENDS OF 12.00 M. SPAN GIRDER.

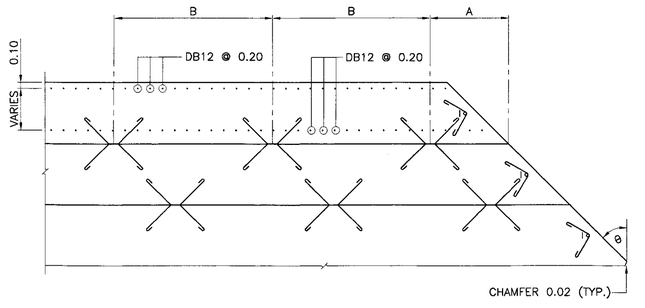

PC. PLANK GIRDER AND CAST–IN–SITU SIDEWALK PLAN
SCALE 1 : 50

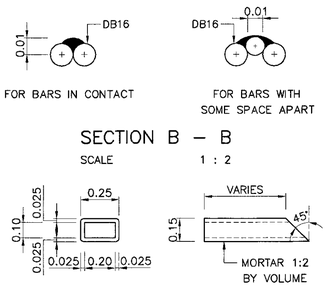

SECTION B – B
SCALE 1 : 2

PRECAST MORTAR DRAIN PIPE
SCALE 1 : 20

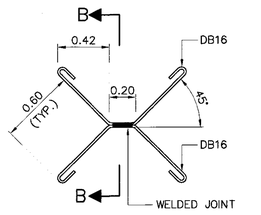

SHEAR CONNECTOR DETAIL
SCALE 1 : 25

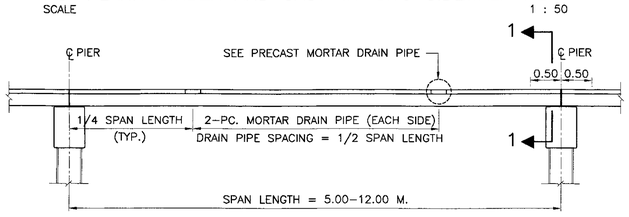

DRAIN PIPE LOCATION
SCALE 1:50

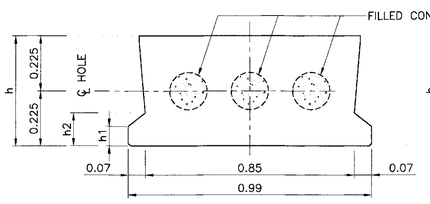

INTERIOR GIRDER END SECTIONS
SCALE 1 : 12.5

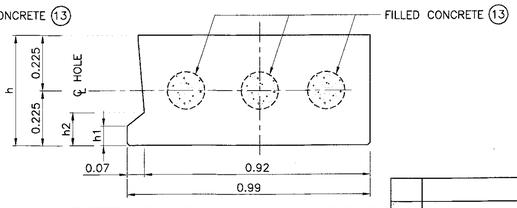

EXTERIOR GIRDER END SECTIONS
SCALE 1 : 12.5

SECTION 1 – 1 (12.00 M. SPAN)

REV.	REVISION	SIGNATURE	DATE
REV.1	REVISION 1/2017		JUN 2017

KINGDOM OF THAILAND
MINISTRY OF TRANSPORT
DEPARTMENT OF HIGHWAYS

STANDARD DRAWING

0°–45° SKEW PC. PLANK GIRDER BRIDGE

GIRDER DIMENSIONS AND SECTIONS

DESIGNED : D.O.H. & CONSULTANTS	**CHECKED :** BUREAU OF LOCATION & DESIGN	**DATE :** OCT 2015
SUBMITTED : (DIRECTOR OF LOCATION & DESIGN BUREAU)		**SCALE :** AS SHOWN
APPROVED : (FOR DIRECTOR GENERAL)		**DWG NO.** PG–101
		SHEET NO. 208/R1

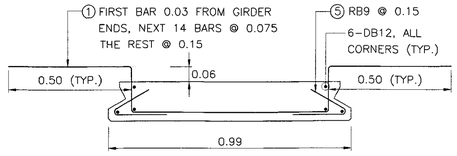

5.00 M. SPAN

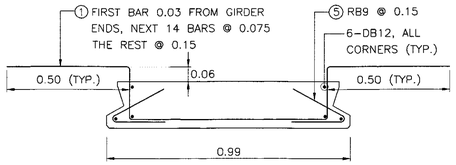

6.00 M. SPAN

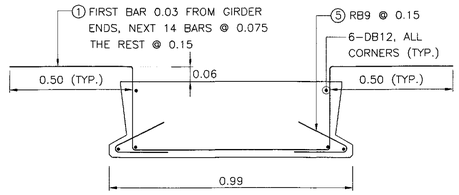

9.00 M. SPAN

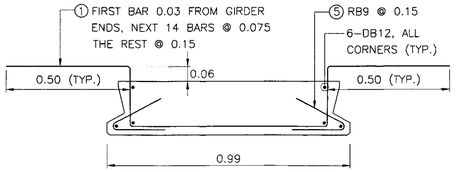

7.00 M. SPAN

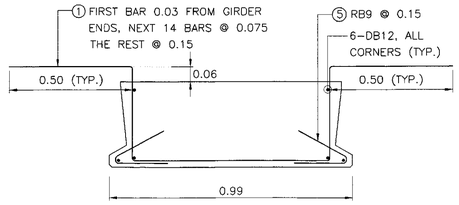

10.00 M. SPAN

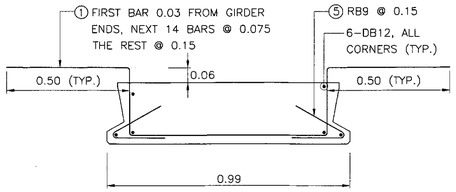

8.00 M. SPAN

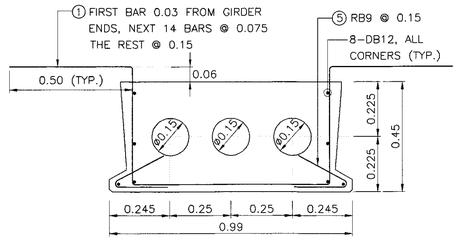

12.00 M. SPAN

INTERIOR GIRDER CROSS SECTIONS
SCALE 1 : 12.5

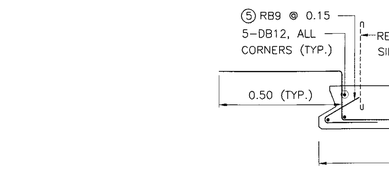

5.00 M. SPAN

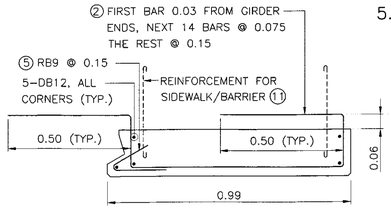

6.00 M. SPAN

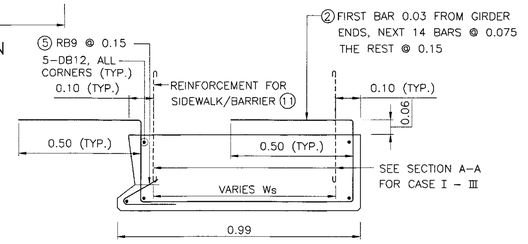

9.00 M. SPAN

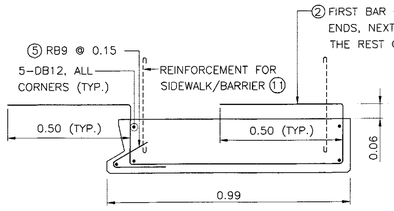

7.00 M. SPAN

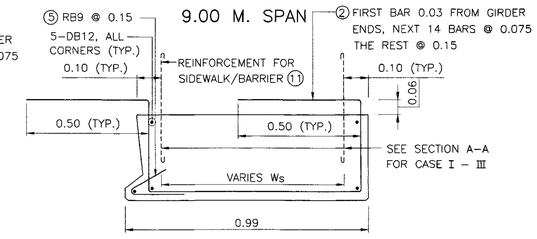

10.00 M. SPAN

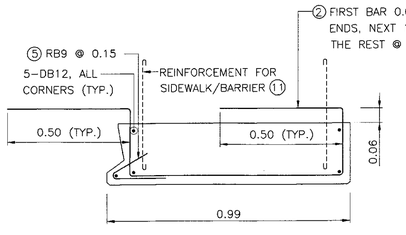

8.00 M. SPAN

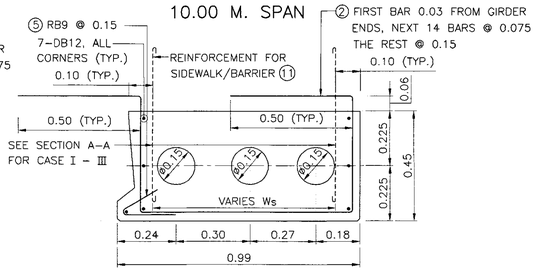

12.00 M. SPAN

EXTERIOR GIRDER TENDON ARRANGEMENTS
SCALE 1 : 12.5

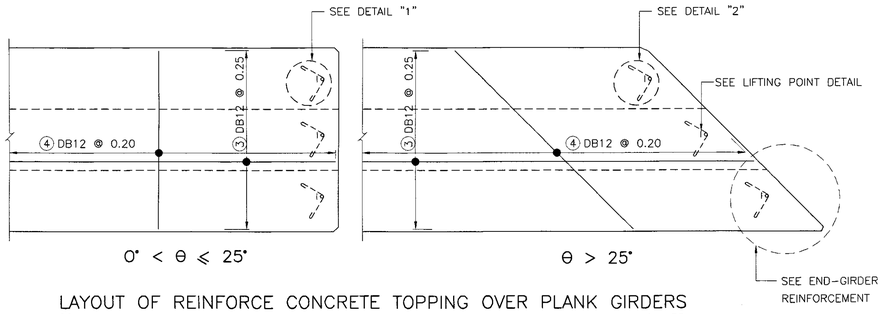

LAYOUT OF REINFORCE CONCRETE TOPPING OVER PLANK GIRDERS
SCALE 1 : 50

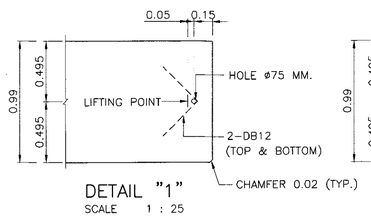

DETAIL "1"
SCALE 1 : 25

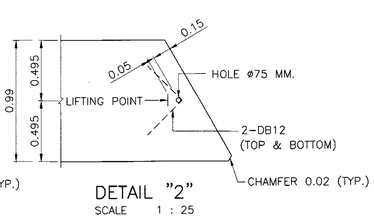

DETAIL "2"
SCALE 1 : 25

NOTES :

1. ALL DIMENSIONS SHOWN ARE IN METERS UNLESS OTHERWISE INDICATED.
2. DESIGN LIVE LOAD : HL-93.
3. A MINIMUM ULTIMATE COMPRESSIVE STRENGTH FOR A 150x150x150 MM. CUBE AT 28 DAYS AS FOLLOWS:
   A) FOR PRESTRESSED PLANK GIRDER 50 MPa. (510 KG/CM^2)
   B) FOR BRIDGE SLAB TOPPING AND SHEAR KEY 40 MPa. (408 KG/CM^2)
   C) FOR SIDEWALK AND BARRIER 35 MPa. (357 KG/CM^2)
4. PRESTRESSING TENDONS MAY BE RELEASED AFTER CONCRETE HAS ATTAINED A MINIMUM ULTIMATE COMPRESSIVE STRENGTH OF 35 MPa. (357 KG/CM^2) FOR THE STRANDARD CUBE.
5. REBAR SIZES SMALLER THAN 12 MM. SHALL BE TIS 20 GRADE SR 24 PLAIN ROUND BARS, OTHERS SHALL BE TIS 24 GRADE SD 40 DEFORMED BARS UNLESS UNLESS OTHERWISE INDICATED.
6. PC. PLANK GIRDER SHALL BE LIFTED AT BOTH ENDS, MIDSPAN LIFTING IS PROHIBITED.
7. THIS TYPE OF PC. PLANK GIRDER MAY BE USED WITH PIERS FOR SLAB BRIDGE HAVING THE SAME SPAN LENGTH.
8. DOWELS FOR HOLDING PC. PLANK GIRDER OVER PIERS SHALL BE PROVIDED AT EVERY ALTERNATE GIRDER.
9. IF PIERS FALL WITHIN THE TRANSITION OF HORIZONTAL CURVE, THE TOP OF CAP BEAM SHALL BE SUPERELEVATED IN ACCORDANCE WITH THE ROADWAY SUPERLEVATION SO THAT THE PC. PLANK GIRDER SHALL BE ON A SMOOTH PLANE. ELEVATION OF FINISHED SURFACE SHALL BE ATTAINED BY ADJUSTING THE CONCRETE TOPPING THIS SHALL BE DONE WITH THE APPROVAL OF THE ENGINEER.
10. CASTING LENGTH OF A GIRDER SHALL BE 1 CM. SHORTER THAN THE SPAN LENGTH.
11. SIDEWALK OR BARRIER REINFORCEMENT SEE SECTION A-A AT DWG. NO. PG-101
12. THIS DRAWING IS USED IN CONJUNCTION WITH DWG. NO. PG-101, PG-103 AND PG-104.

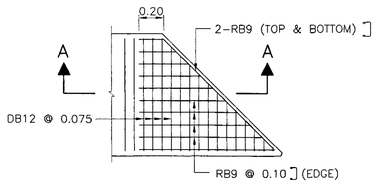

END-GIRDER REINFORCEMENT
SCALE 1 : 25

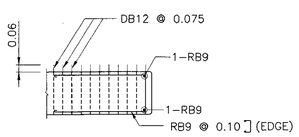

SECTION A - A
SCALE 1 : 25

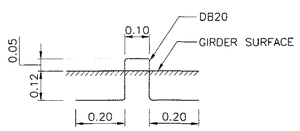

LIFTING POINT DETAIL
SCALE 1 : 12.5

BAR BENDING DIAGRAMS (M.)	BAR MARK	REBAR (M.)
0.50 0.50 ①	①	DB12
0.50 0.50 ②	②	DB12
VARIES ③	③	DB12
VARIES 0.30 0.30 ④	④	DB12
⑤	⑤	RB9

REV.	REVISION	SIGNATURE	DATE
REV.1	REVISION 1/2017		JUN 2017

KINGDOM OF THAILAND

MINISTRY OF TRANSPORT

DEPARTMENT OF HIGHWAYS

STANDARD DRAWING

0°-45° SKEW PC. PLANK GIRDER BRIDGE

GIRDER REINFORCEMENT DETAILS

DESIGNED : D.O.H. & CONSULTANTS **CHECKED :** BUREAU OF LOCATION & DESIGN **DATE :** OCT 2015

SUBMITTED : (DIRECTOR OF LOCATION & DESIGN BUREAU) **SCALE :** AS SHOWN

APPROVED : (FOR DIRECTOR GENERAL) **DWG NO.** PG-102

SHEET NO. 209/R1

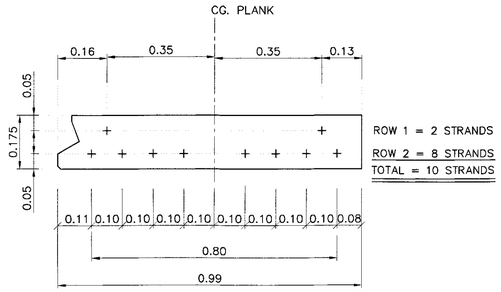

5.00 M. SPAN

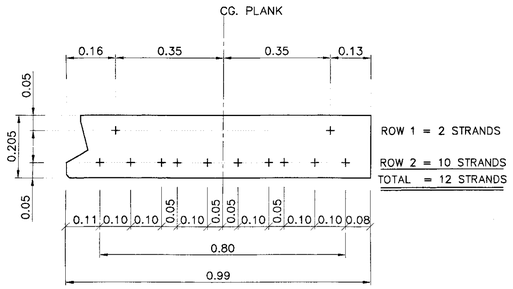

6.00 M. SPAN

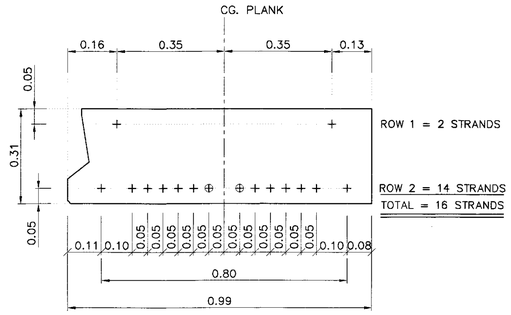

9.00 M. SPAN

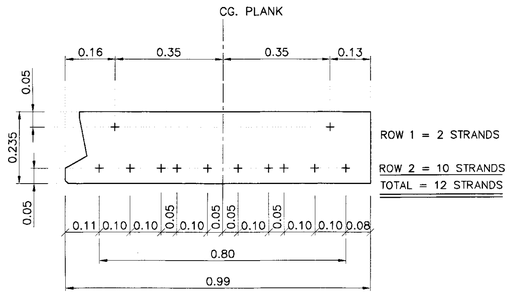

7.00 M. SPAN

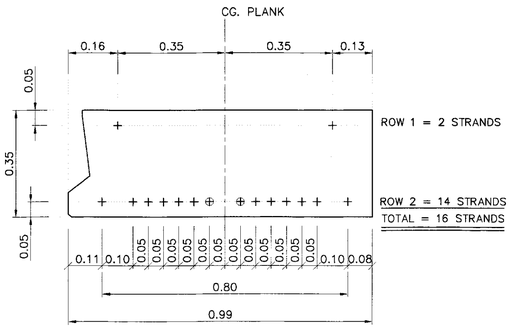

10.00 M. SPAN

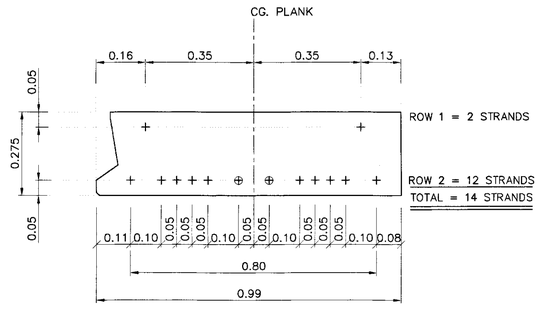

8.00 M. SPAN

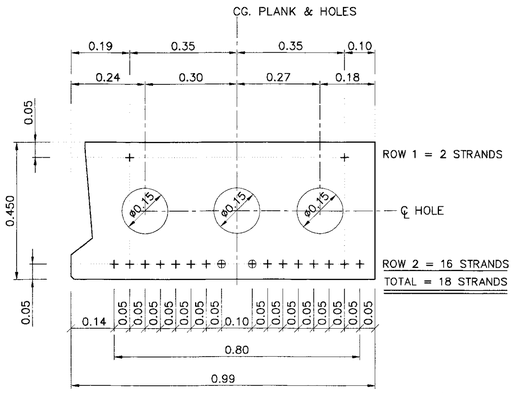

12.00 M. SPAN

EXTERIOR GIRDER STRAND ARRANGEMENTS
SCALE 1 : 10

TABLE DEBONDING DETAIL FOR BRIDGE SPAN 5.00 TO 12.00 M.

PLANK GIRDER SPAN	DEBOND		
	ROW	NO.	LENGTH FROM END GIRDER
5.00	–	–	–
6.00	–	–	–
7.00	–	–	–
8.00	2	2	1.00
9.00	2	2	1.00
10.00	2	2	1.00
12.00	2	2	1.00

NOTES :

1. ALL DIMENSIONS SHOWN ARE IN METERS UNLESS OTHERWISE INDICATED
2. DESIGN LIVE LOAD : HL-93.
3. MIX. DESIGN OF CONCRETE FOR PRESTRESSED PLANK GIRDER HAVE A MINIMUM ULTIMATE COMPRESSIVE STRENGTH OF 50 MPa. (510 KG/CM^2) FOR CUBE STRENGTH AT 28 DAYS.
4. PRESTRESSING :
   4.1 LOW RELAXATION SEVEN WIRE STRANDS ø12.7 MM. IN ACCORDANCE WITH TIS 420
   4.2 MIN CHARACTERISTIC STRENGTH OF STRAND 180 KN.
   4.3 INITIAL PRESTRESS SHALL BE 75% OF CHARACTERISTIC STRENGTH.
5. SYMBOLS OF PRESTRESSING STRANDS
   + ——— BOND PRESTESSING STRANDS
   ⊕ - - - - DEBOND PRESTESSING STRANDS, DEBONDING LENGTHS FROM GIRDER ENDS
6. THIS DRAWING IS USED IN CONJUNCTION WITH DWG. NO. PG-101, PG-102 AND PG-104

REV.	REVISION	SIGNATURE	DATE
REV.1	REVISION 1/2017		JUN 2017

KINGDOM OF THAILAND

MINISTRY OF TRANSPORT

DEPARTMENT OF HIGHWAYS

STANDARD DRAWING

0°-45° SKEW PC. PLANK GIRDER BRIDGE

STRAND ARRANGEMENT DETAILS (EXTERIOR PLANK)

DESIGNED : D.O.H. & CONSULTANTS	**CHECKED :** BUREAU OF LOCATION & DESIGN	**DATE :** OCT 2015
SUBMITTED : (DIRECTOR OF LOCATION & DESIGN BUREAU)		**SCALE :** AS SHOWN
		DWG NO. PG-103
APPROVED : (FOR DIRECTOR GENERAL)		**SHEET NO.** 210/R1

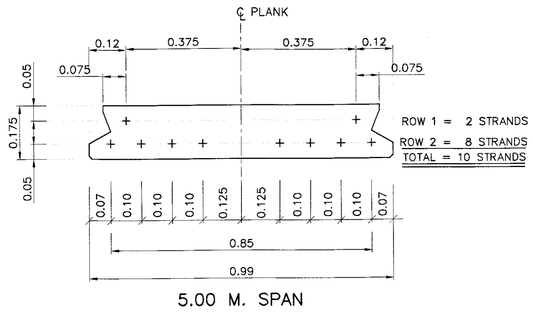

5.00 M. SPAN

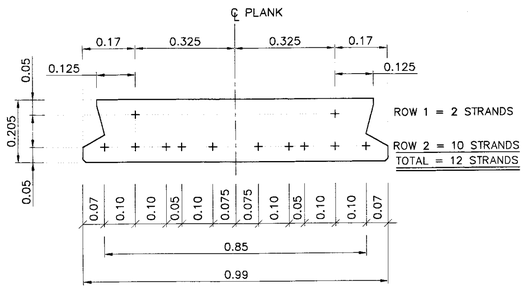

6.00 M. SPAN

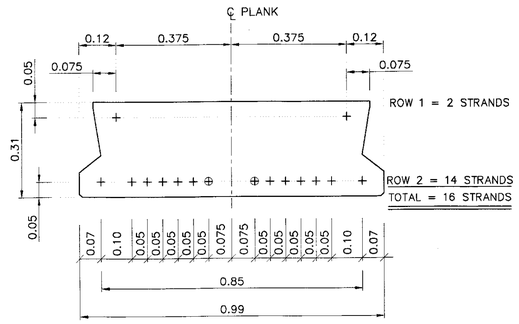

9.00 M. SPAN

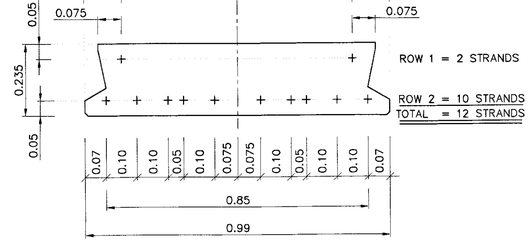

7.00 M. SPAN

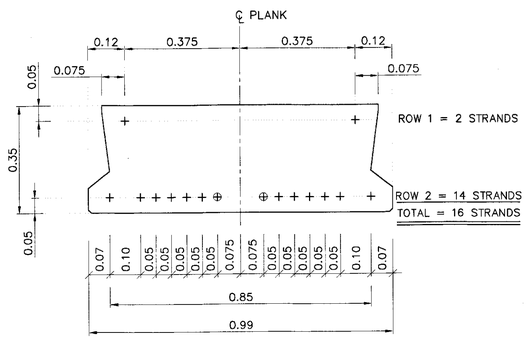

10.00 M. SPAN

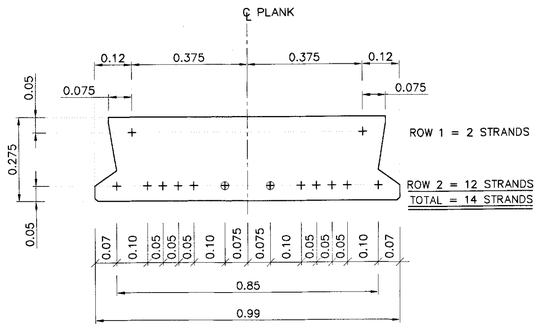

8.00 M. SPAN

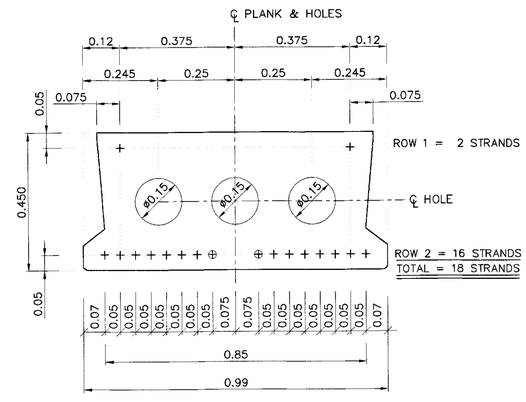

12.00 M. SPAN

INTERIOR GIRDER STRAND ARRANGEMENTS

SCALE 1:10

TABLE DEBONDING DETAIL FOR BRIDGE SPAN 5.00 TO 12.00 M.

PLANK GIRDER SPAN	DEBOND		
	ROW	NO.	LENGTH FROM END GIRDER
5.00	–	–	–
6.00	–	–	–
7.00	–	–	–
8.00	2	2	1.00
9.00	2	2	1.00
10.00	2	2	1.00
12.00	2	2	1.00

NOTES :

1. ALL DIMENSIONS SHOWN ARE IN METERS UNLESS OTHERWISE INDICATED.
2. DESIGN LIVE LOAD : HL-93.
3. MIX. DESIGN OF CONCRETE FOR PRESTRESSED PLANK GIRDER HAVE A MINIMUM ULTIMATE COMPRESSIVE STRENGTH OF 50 MPa. (510 KG/CM^2) FOR CUBE STRENGTH AT 28 DAYS.
4. PRESTRESSING :
   - 4.1 LOW RELAXATION SEVEN WIRE STRANDS ø 12.7 MM. IN ACCORDANCE WITH TIS 420
   - 4.2 MIN CHARACTERISTIC STRENGTH OF STRAND 180 KN.
   - 4.3 INITIAL PRESTRESS SHALL BE 75% OF CHARACTERISTIC STRENGTH.
5. SYMBOLS OF PRESTRESSING STRANDS
   - + ——— BOND PRESTESSING STRANDS
   - ⊕ - - - - DEBOND PRESTESSING STRANDS, DEBONDING LENGTHS FROM GIRDER ENDS
6. THIS DRAWING IS USED IN CONJUNCTION WITH DWG. NO. PG-101, PG-102 AND PG-103

REV.	REVISION	SIGNATURE	DATE
REV.1	REVISION 1/2017		JUN 2017

KINGDOM OF THAILAND

MINISTRY OF TRANSPORT

DEPARTMENT OF HIGHWAYS

STANDARD DRAWING

0°-45° SKEW PC. PLANK GIRDER BRIDGE

STRAND ARRANGEMENT DETAILS (INTERIOR PLANK)

DESIGNED : D.O.H. & CONSULTANTS **CHECKED :** BUREAU OF LOCATION & DESIGN **DATE :** OCT 2015

SUBMITTED : (DIRECTOR OF LOCATION & DESIGN BUREAU) **SCALE :** AS SHOWN

APPROVED : (FOR DIRECTOR GENERAL) **DWG NO.** PG-104

SHEET NO. 211/R1

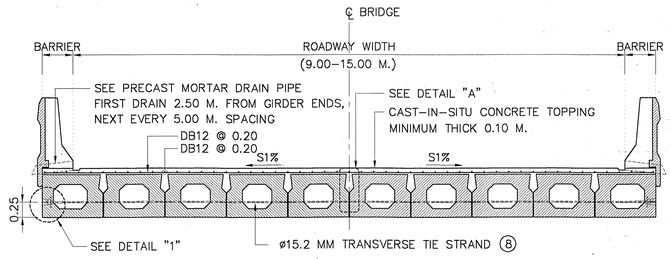

BRIDGE SECTION (WITHOUT SIDEWALK)
SCALE 1 : 50

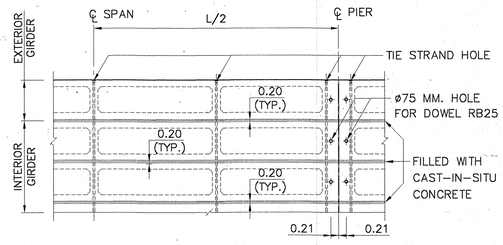

BOX BEAM ARRANGMENT (SKEW 0°)
SCALE 1 : 75

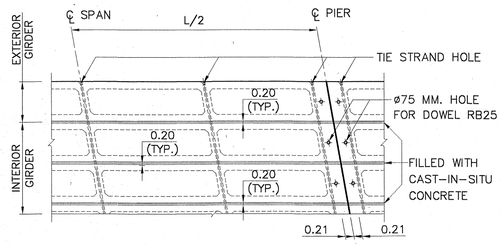

BOX BEAM ARRANGMENT (SKEW ⩽ 45°)
SCALE 1 : 75

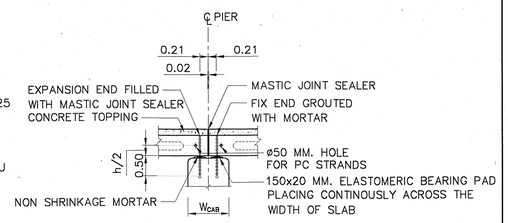

CAP BEAM DETAIL
SCALE 1 : 75

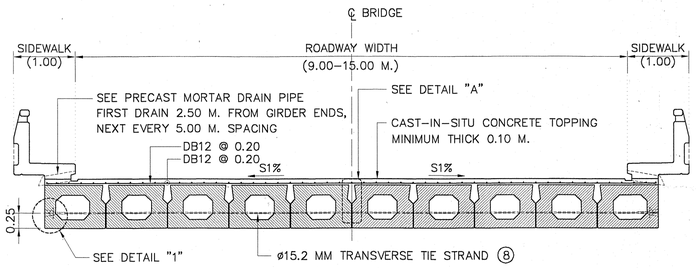

BRIDGE SECTION (1.00 M. SIDEWALK)
SCALE 1 : 50

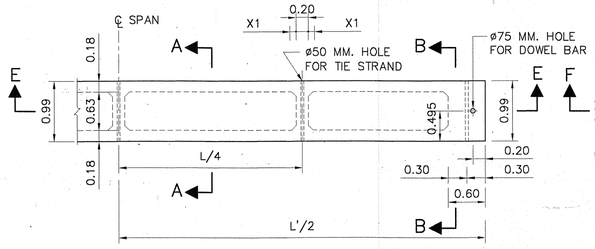

INTERIOR GIRDER PLAN (SKEW 0°)
SCALE 1 : 50

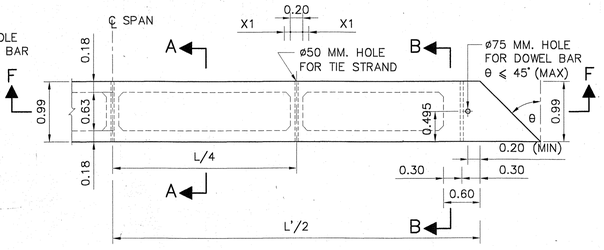

INTERIOR GIRDER PLAN (SKEW ⩽ 45°)
SCALE 1 : 50

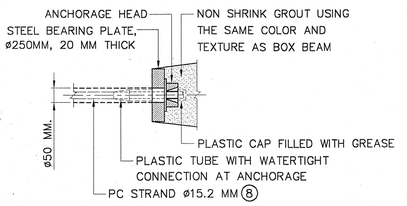

BLOCK OUT

DETAIL "1"
SCALE 1 : 10

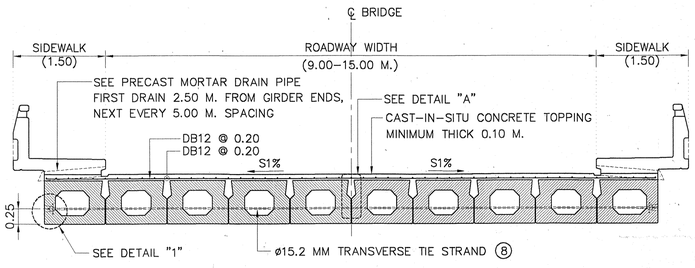

BRIDGE SECTION (1.50 M. SIDEWALK)
SCALE 1 : 50

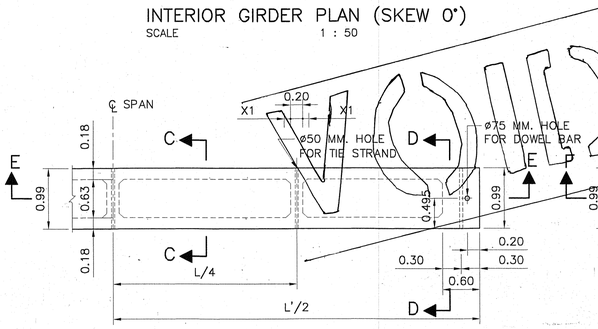

EXTERIOR GIRDER PLAN (SKEW 0°)
SCALE 1 : 50

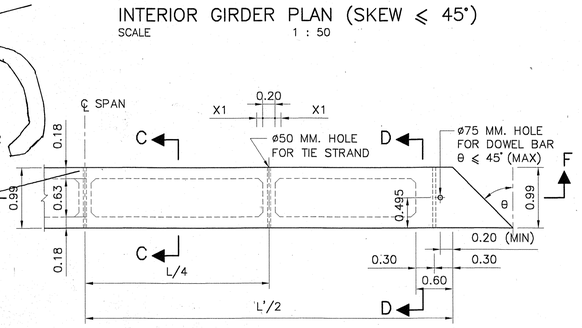

EXTERIOR GIRDER PLAN (SKEW ⩽ 45°)
SCALE 1 : 50

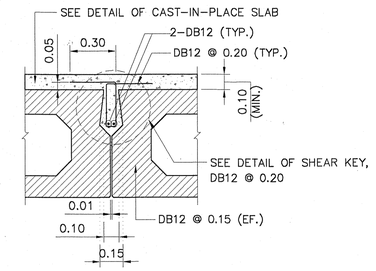

DETAIL "A"
SCALE 1 : 20

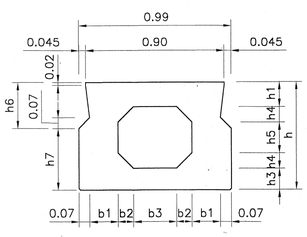

SECTION A – A
SCALE 1 : 20

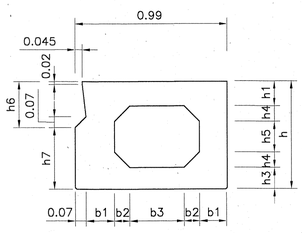

SECTION C – C
SCALE 1 : 20

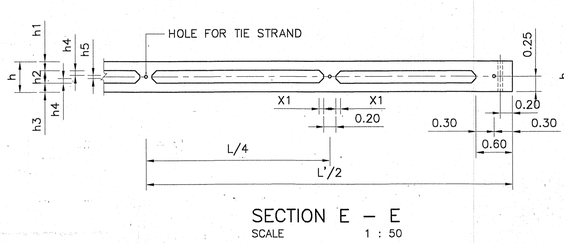

SECTION E – E
SCALE 1 : 50

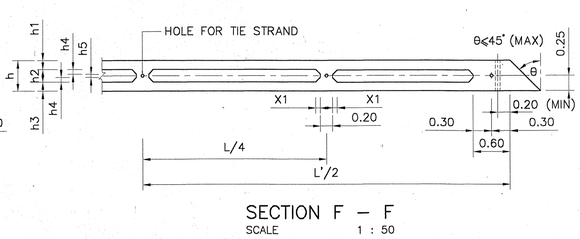

SECTION F – F
SCALE 1 : 50

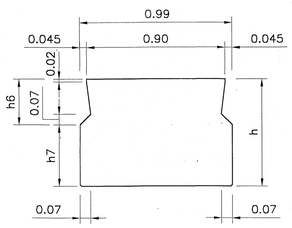

SECTION B – B
SCALE 1 : 20

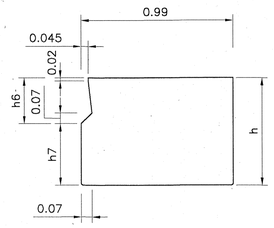

SECTION D – D
SCALE 1 : 20

TABLE BOX BEAM CONCRETE OUTLINE FOR SPAN 15.00 M. AND 20.00 M.

BOX BEAM SPAN (M.)		BOX BEAM DIMENSION (M.)															
L	L'	L/2	L/4	L'/2	L'/2–L/4	b1	b2	b3	h1	h2	h3	h4	h5	h6	h7	h	X1
15.00	14.98	7.50	3.75	7.49	3.74	0.18	0.10	0.29* 0.36**	0.18	0.28	0.14	0.09	0.10	0.25	0.35	0.60	0.10
20.00	19.98	10.00	5.00	9.99	4.99	0.18	0.10	0.29* 0.36**	0.18	0.36	0.16	0.08	0.20	0.30	0.40	0.70	0.10

REMARK : * FOR INTERIOR BOX BEAM
** FOR EXTERIOR BOX BEAM

NOTES :

1. ALL DIMENSIONS SHOWN ARE IN METERS UNLESS OTHERWISE INDICATED
2. DESIGN LIVE LOAD : HL–93.
3. CAST–IN–SITU CONCRETE FOR BRIDGE SLAB TOPPING AND SHEAR KEY BETWEEN PC. BOX BEAM SHALL HAVE A MINIMUM ULTIMATE COMPRESSIVE STRENGTH OF 40 MPa. (408 KG/CM^2) FOR 150x150x150 MM. CUBE AT 28 DAYS
4. CAST–IN–SITU CONCRETE FOR SIDEWALK, CURB AND BARRIER SHALL HAVE A MINIMUM ULTIMATE COMPRESSIVE STRENGTH OF 35 MPa. (357 KG/CM^2) FOR 150x150x150 MM. CUBE AT 28 DAYS
5. LENGTH AND LOCATIONS OF LAP SPLICE OF REBARS SHALL BE APPROVED BY THE ENGINEER
6. DETAILS OF REBAR AND STRAND ARE SHOWN IN DWG. NO. BB–102 AND BB–103, RESPECTIVELY
7. THIS DRAWING IS USED IN CONJUNCTION WITH DWG. NO. BB–102 AND BB–103
8. ⑧ USE ø15.2 MM 7 WIRE LOW RELAXATION STRANDS AND RUSTPROOF. PRESTRESSING STRANDS BEFORE CASTING CONCRETE TOPPING, THE JACKING FORCE AFTER LOSS SHALL BE 150 KN/STRAND.
9. TRANSVERSE TIES SHALL BE COVERED BY A SEAMLESS POLYPROPYLENE SHEATH AND SUBMITTED FOR APPROVAL.

REV.	REVISION	SIGNATURE	DATE
REV.1	REVISION 1/2017		JUN 2017

KINGDOM OF THAILAND

MINISTRY OF TRANSPORT
DEPARTMENT OF HIGHWAYS

STANDARD DRAWING

0°–45° SKEW PC. BOX BEAM 15.00 M. AND 20.00 M. SPAN

PLANS AND SECTIONS

DESIGNED : D.O.H. & CONSULTANTS	**CHECKED :** BUREAU OF LOCATION & DESIGN	**DATE :** OCT 2015
SUBMITTED : (DIRECTOR OF LOCATION & DESIGN BUREAU)		**SCALE :** AS SHOWN
APPROVED : (FOR DIRECTOR GENERAL)		**DWG NO.** BB–101
		SHEET NO. 212/RI

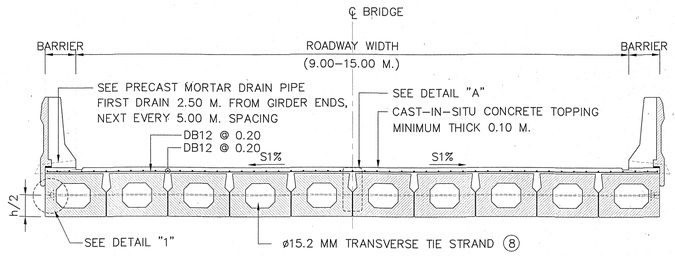

BRIDGE SECTION (WITHOUT SIDEWALK)
SCALE 1 : 50

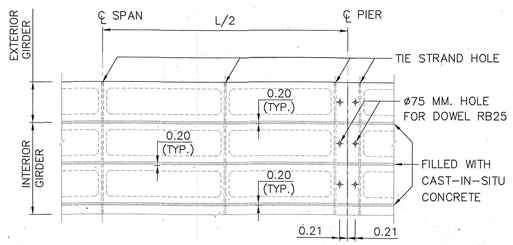

BOX BEAM ARRANGMENT (SKEW 0°)
SCALE 1 : 75

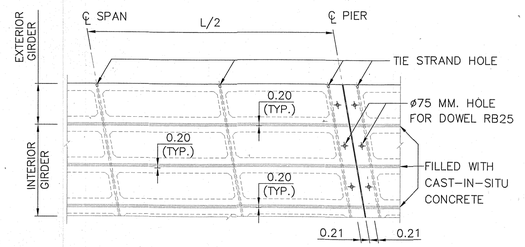

BOX BEAM ARRANGMENT (SKEW ⩽ 45°)
SCALE 1 : 75

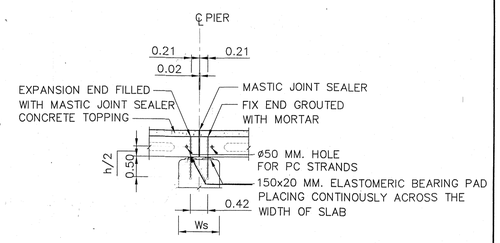

CAP BEAM DETAIL
SCALE 1 : 75

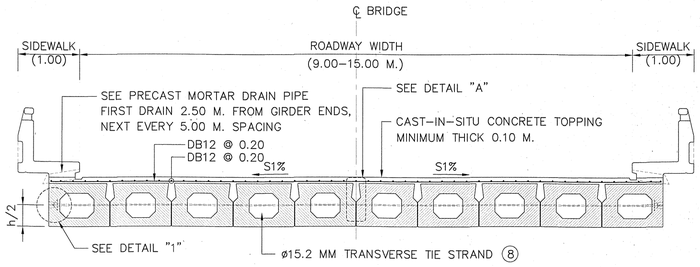

BRIDGE SECTION (1.00 M. SIDEWALK)
SCALE 1 : 50

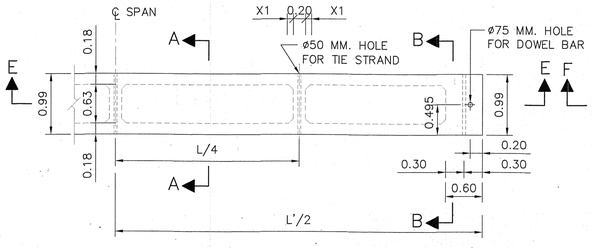

INTERIOR GIRDER PLAN (SKEW 0°)
SCALE 1 : 50

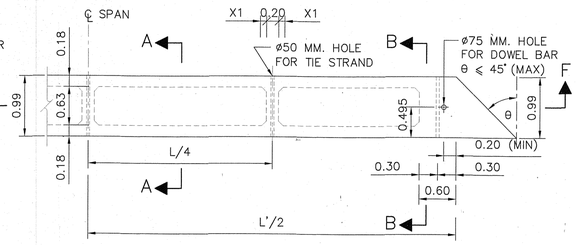

INTERIOR GIRDER PLAN (SKEW ⩽ 45°)
SCALE 1 : 50

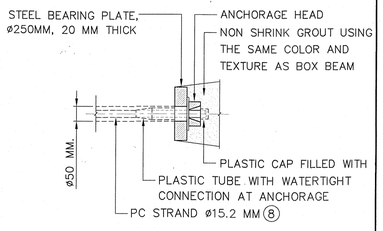

DETAIL "1"
SCALE 1 : 10

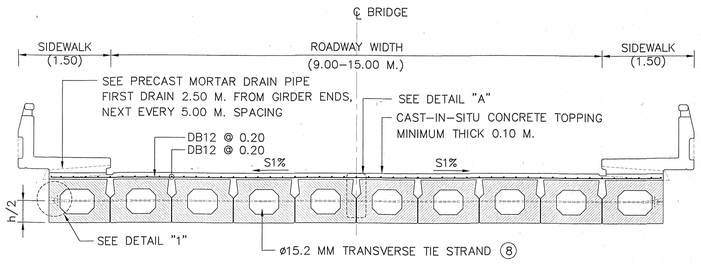

BRIDGE SECTION (1.50 M. SIDEWALK)
SCALE 1 : 50

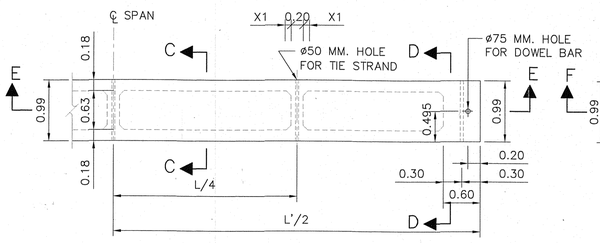

EXTERIOR GIRDER PLAN (SKEW 0°)
SCALE 1 : 50

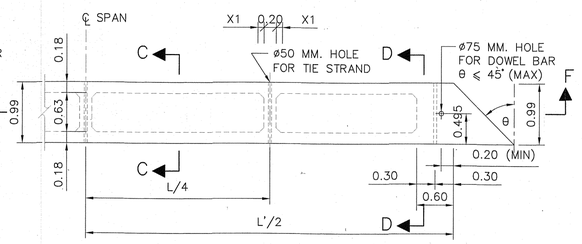

EXTERIOR GIRDER PLAN (SKEW ⩽ 45°)
SCALE 1 : 50

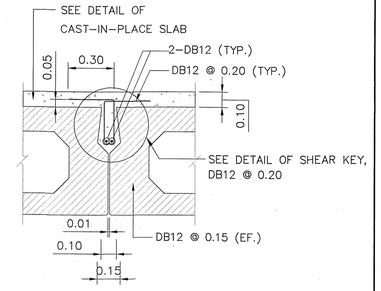

DETAIL "A"
SCALE 1 : 20

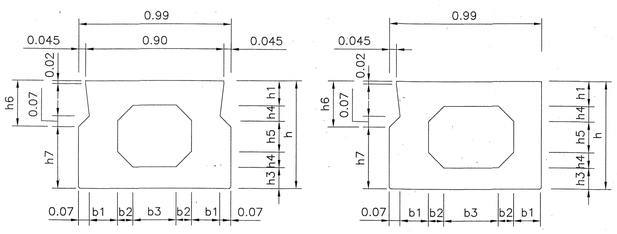

SECTION A – A
SCALE 1 : 20

SECTION C – C
SCALE 1 : 20

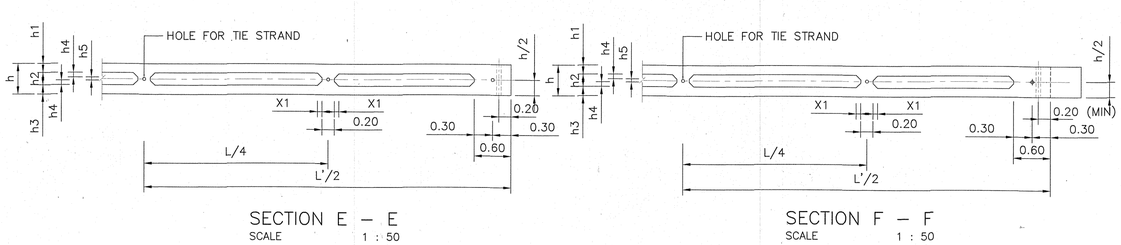

SECTION E – E
SCALE 1 : 50

SECTION F – F
SCALE 1 : 50

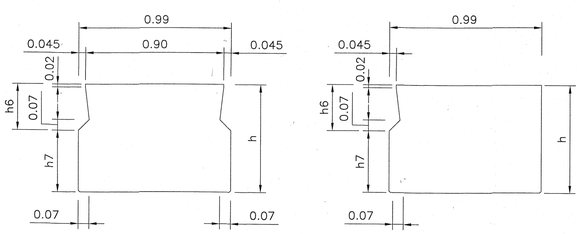

SECTION B – B
SCALE 1 : 20

SECTION D – D
SCALE 1 : 20

TABLE BOX BEAM CONCRETE OUTLINE FOR SPAN 15.00 M. AND 20.00 M.

BOX BEAM SPAN (M.)		BOX BEAM DIMENSION (M.)															
L	L'	L/2	L/4	L'/2	L'/2–L/4	b1	b2	b3	h1	h2	h3	h4	h5	h6	h7	h	X1
15.00	14.98	7.50	3.75	7.49	3.74	0.18	0.10	0.29* 0.36**	0.18	0.28	0.14	0.09	0.10	0.25	0.35	0.60	0.10
20.00	19.98	10.00	5.00	9.99	4.99	0.18	0.10	0.29* 0.36**	0.18	0.36	0.16	0.08	0.20	0.30	0.40	0.70	0.10

REMARK : * FOR INTERIOR BOX BEAM
** FOR EXTERIOR BOX BEAM

NOTES:

1. ALL DIMENSIONS SHOWN ARE IN METERS UNLESS OTHERWISE INDICATED
2. DESIGN LIVE LOAD : HL–93.
3. CAST–IN–SITU CONCRETE FOR BRIDGE SLAB TOPPING AND SHEAR KEY BETWEEN PC. BOX BEAM SHALL HAVE A MINIMUM ULTIMATE COMPRESSIVE STRENGTH OF 40 MPa. (408 KG/CM^2) FOR 150x150x150 MM. CUBE AT 28 DAYS
4. CAST–IN–SITU CONCRETE FOR SIDEWALK, CURB AND BARRIER SHALL HAVE A MINIMUM. ULTIMATE COMPRESSIVE STRENGTH OF 35 MPa. (357 KG/CM^2) FOR 150x150x150 MM. CUBE AT 28 DAYS
5. LENGTH AND LOCATIONS OF LAP SPLICE OF REBARS SHALL BE APPROVED BY THE ENGINEER
6. DETAILS OF REBAR AND STRAND ARE SHOWN IN DWG. NO. BB–102 AND BB–103, RESPECTIVELY
7. THIS DRAWING IS USED IN CONJUNCTION WITH DWG. NO. BB–102 AND BB–103
8. ⑧ USE ø15.2 MM 7 WIRE LOW RELAXATION STANDS AND RUSTPROOF. AFTER CASTING CONCRETE TOPPING 3 DAYS, THE JACKING FORCE AFTER LOSS SHALL BE 150 KN/STRAND.
9. TRANSVERSE TIES SHALL BE COVERED BY A SEAMLESS POLYPROPYLENE SHEATH AND SUBMITTED FOR APPOVAL.

REV.	REVISION	SIGNATURE	DATE
REV.2	REVISION 2/2021		JAN 2021
REV.1	REVISION 1/2017		JUN 2017

KINGDOM OF THAILAND

MINISTRY OF TRANSPORT
DEPARTMENT OF HIGHWAYS

STANDARD DRAWING

0°–45° SKEW PC. BOX BEAM 15.00 M. AND 20.00 M. SPAN PLANS AND SECTIONS

DESIGNED : D.O.H. & CONSULTANTS	**CHECKED :** BUREAU OF LOCATION & DESIGN	**DATE :** OCT 2015
SUBMITTED : (DIRECTOR OF LOCATION & DESIGN BUREAU)		**SCALE :** AS SHOWN
APPROVED : (FOR DIRECTOR GENERAL)		**DWG NO.** BB–101
		SHEET NO. 212/R2

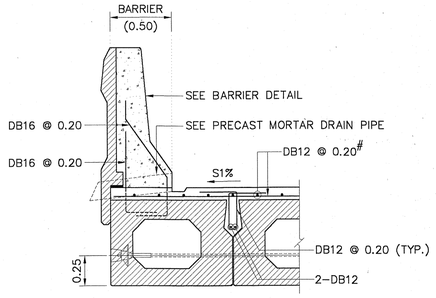

WITHOUT SIDEWALK DETAIL
SCALE 1 : 25

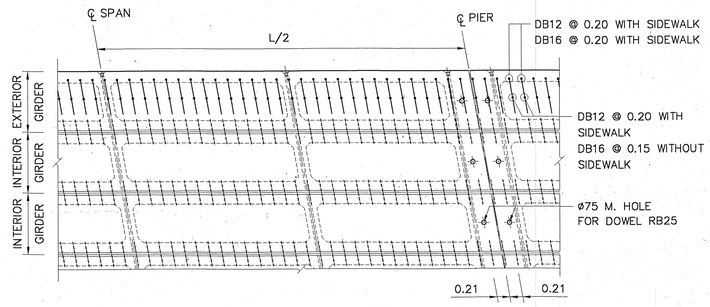

BOX GIRDER ARRANGMENT (SKEW ⩽ 45°)
SCALE 1 : 50

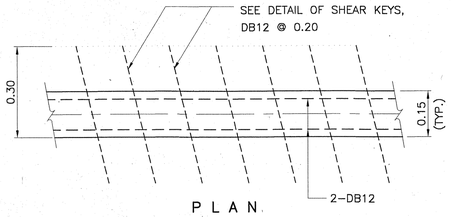

P L A N

SHEAR KEYS DETAIL
SCALE 1 : 10

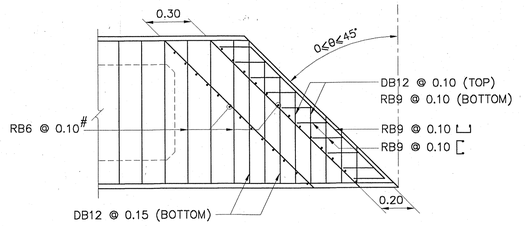

EXTRA REINFORCEMENT PLAN (SKEW ⩽ 45°)
SCALE 1 : 20

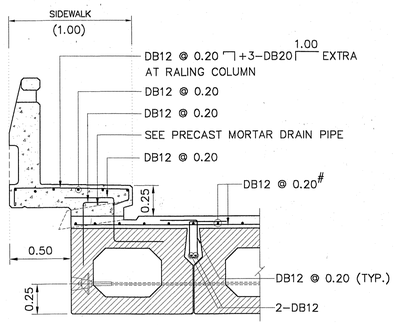

1.00 M. SIDEWALK DETAIL
SCALE 1 : 25

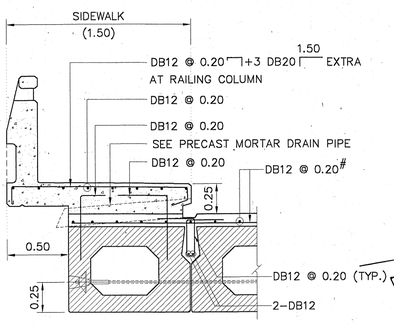

1.50 M. SIDEWALK DETAIL
SCALE 1 : 25

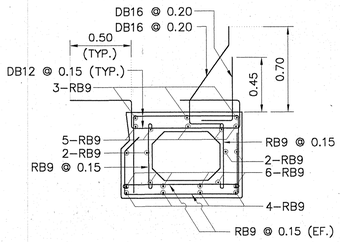

SECTION A – A (WITHOUT SIDEWALK)
SCALE 1 : 25

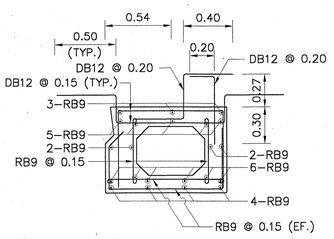

SECTION A – A (1.00 M. SIDEWALK)
SCALE 1 : 25

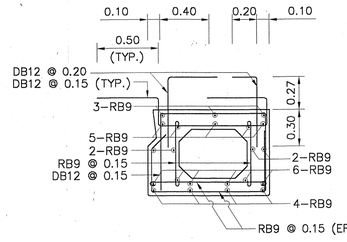

SECTION A – A (1.50 M. SIDEWALK)
SCALE 1 : 25

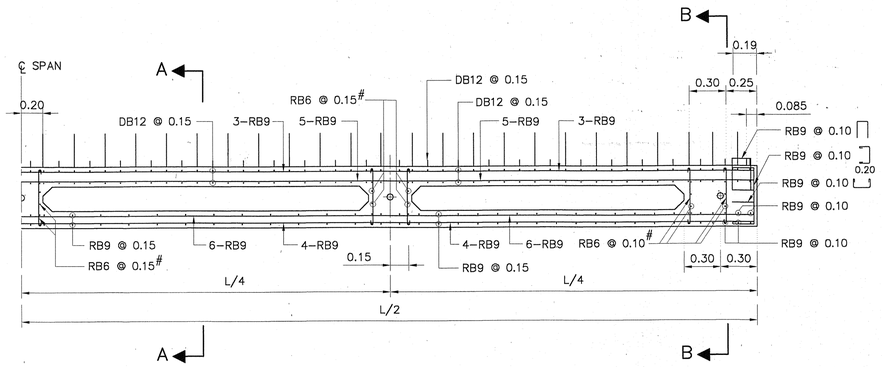

EXTERIOR BOX GIRDER REINFORCEMENT LONGITUDINAL SECTION
NOT TO SCALE

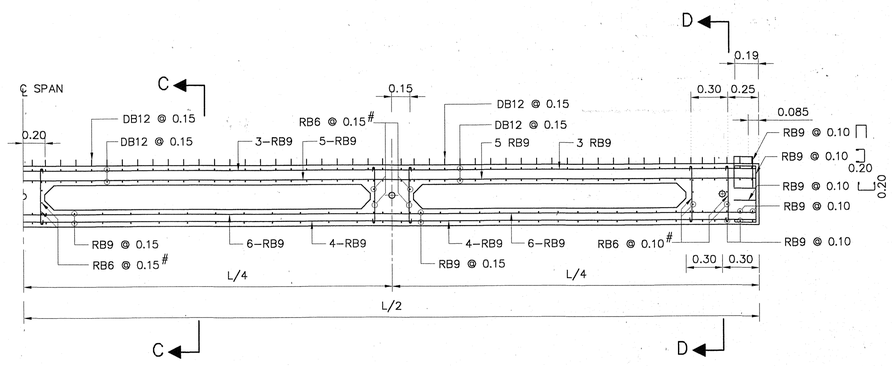

INTERIOR BOX GIRDER REINFORCEMENT LONGITUDINAL SECTION
NOT TO SCALE

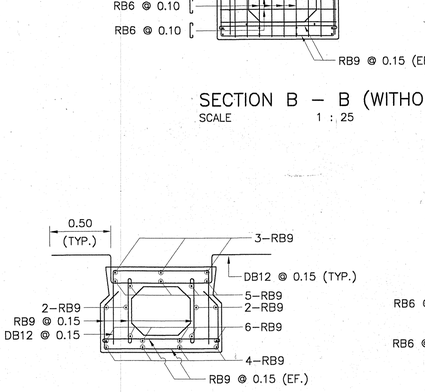

SECTION B – B (WITHOUT SIDEWALK)
SCALE 1 : 25

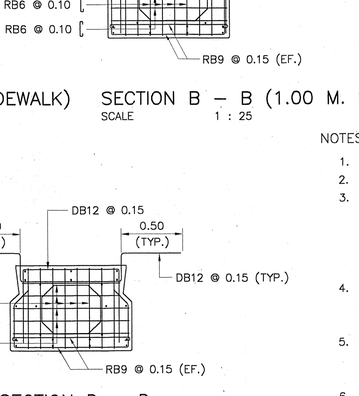

SECTION B – B (1.00 M. SIDEWALK)
SCALE 1 : 25

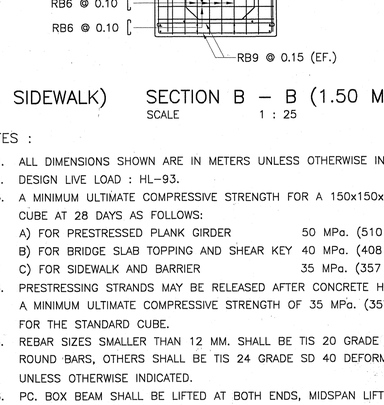

SECTION B – B (1.50 M. SIDEWALK)
SCALE 1 : 25

SECTION C – C
SCALE 1 : 25

SECTION D – D
SCALE 1 : 25

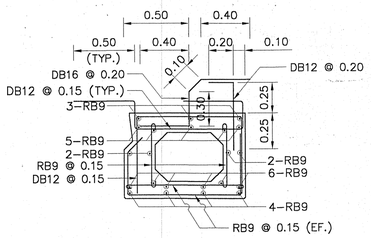

REINFORCEMENT DETAIL (BRIDGE SIGN)
SCALE 1 : 25

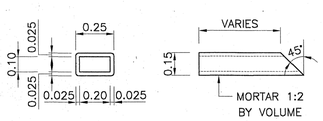

PRECAST MORTAR DRAIN PIPE
SCALE 1 : 20

NOTES :

1. ALL DIMENSIONS SHOWN ARE IN METERS UNLESS OTHERWISE INDICATED.
2. DESIGN LIVE LOAD : HL-93.
3. A MINIMUM ULTIMATE COMPRESSIVE STRENGTH FOR A 150x150x150 MM. CUBE AT 28 DAYS AS FOLLOWS:
   A) FOR PRESTRESSED PLANK GIRDER 50 MPa. (510 KG/CM^2)
   B) FOR BRIDGE SLAB TOPPING AND SHEAR KEY 40 MPa. (408 KG/CM^2)
   C) FOR SIDEWALK AND BARRIER 35 MPa. (357 KG/CM^2)
4. PRESTRESSING STRANDS MAY BE RELEASED AFTER CONCRETE HAS ATTAINED A MINIMUM ULTIMATE COMPRESSIVE STRENGTH OF 35 MPa. (357 KG/CM^2) FOR THE STANDARD CUBE.
5. REBAR SIZES SMALLER THAN 12 MM. SHALL BE TIS 20 GRADE SR 24 PLAIN ROUND BARS, OTHERS SHALL BE TIS 24 GRADE SD 40 DEFORMED BARS UNLESS OTHERWISE INDICATED.
6. PC. BOX BEAM SHALL BE LIFTED AT BOTH ENDS, MIDSPAN LIFTING IS PROHIBITED.
7. THIS TYPE OF PC. BOX BEAM MAY BE USED WITH PIERS FOR SLAB BRIDGE HAVING THE SAME SPAN LENGTH.
8. DOWELS FOR HOLDING PC. BOX BEAM OVER PIERS SHALL BE PROVIDED AT EVERY ALTERNATE GIRDER.
9. ANY SPECIAL RAILINGS, IF DIFFERENT FROM THE ABOVE-MENTIONED MAY BE USED UNDER THE APPROVAL OF THE ENGINEER.
10. DIMENSIONS OF PC. BOX BEAM ARE SHOWN ON DWG. NO. BB-101
11. PRESTRESSING STRANDS ARE DESIGNED AS SHOWN ON DWG. NO. BB-103
12. THIS DRAWING IS USED IN CONJUNCTION WITH DWG. NO. BB-101 AND BB-103

KINGDOM OF THAILAND

MINISTRY OF TRANSPORT
DEPARTMENT OF HIGHWAYS

STANDARD DRAWING

0°-45° SKEW PC. BOX BEAM 15.00 M. AND 20.00 M. SPAN

REINFORCEMENT DETAILS

REV.1	REVISION 1/2017		JUN 2017
REV.	REVISION	SIGNATURE	DATE

DESIGNED : D.O.H. & CONSULTANTS **CHECKED :** BUREAU OF LOCATION & DESIGN **DATE :** OCT 2015

SUBMITTED : (DIRECTOR OF LOCATION & DESIGN BUREAU) **SCALE :** AS SHOWN

APPROVED : (FOR DIRECTOR GENERAL) **DWG NO.** BB-102

SHEET NO. 213/RI

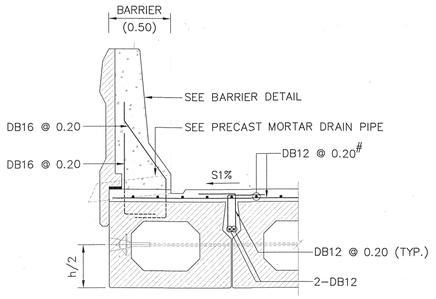

WITHOUT SIDEWALK DETAIL
SCALE 1 : 25

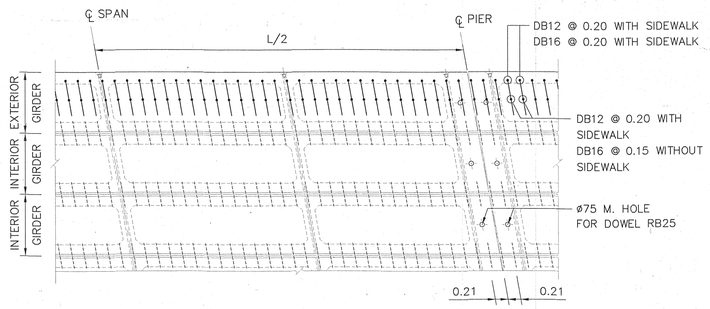

BOX GIRDER ARRANGMENT (SKEW ⩽ 45°)
SCALE 1 : 50

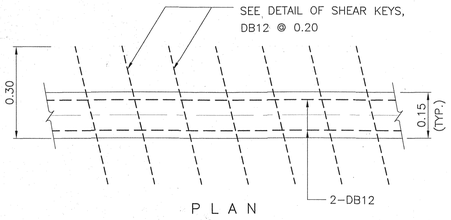

P L A N

SHEAR KEYS DETAIL
SCALE 1 : 10

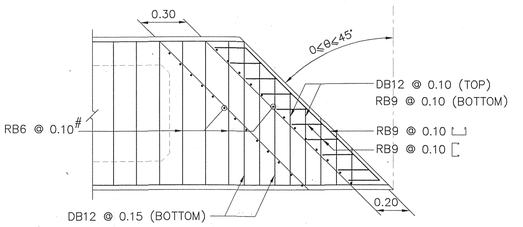

EXTRA REINFORCEMENT PLAN (SKEW ⩽ 45°)
SCALE 1 : 20

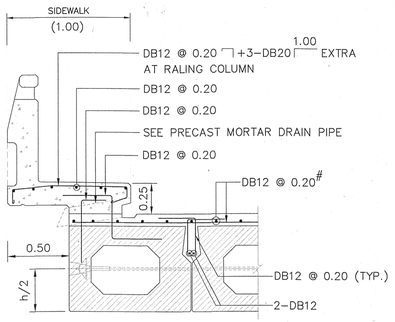

1.00 M. SIDEWALK DETAIL
SCALE 1 : 25

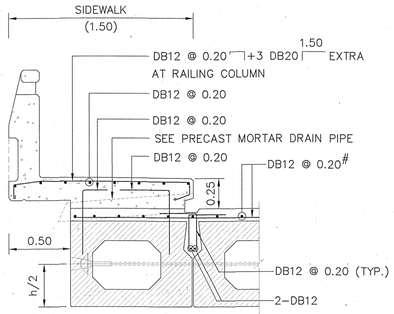

1.50 M. SIDEWALK DETAIL
SCALE 1 : 25

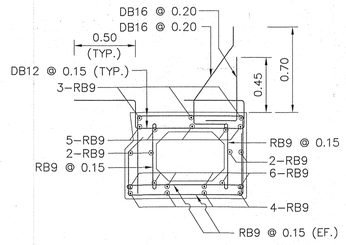

SECTION A – A (WITHOUT SIDEWALK)
SCALE 1 : 25

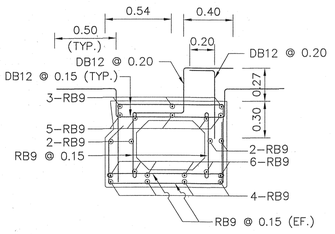

SECTION A – A (1.00 M. SIDEWALK)
SCALE 1 : 25

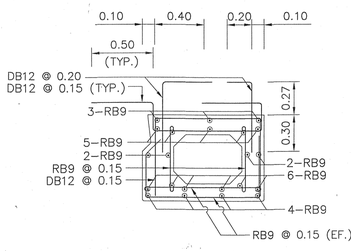

SECTION A – A (1.50 M. SIDEWALK)
SCALE 1 : 25

SECTION B – B (WITHOUT SIDEWALK)
SCALE 1 : 25

SECTION B – B (1.00 M. SIDEWALK)
SCALE 1 : 25

SECTION B – B (1.50 M. SIDEWALK)
SCALE 1 : 25

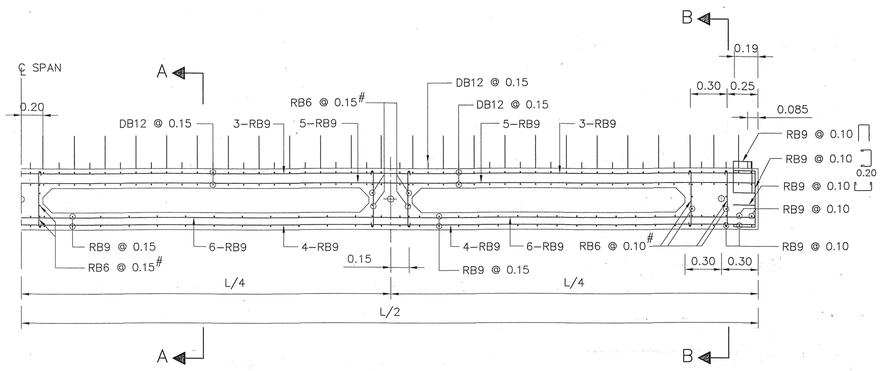

EXTERIOR BOX GIRDER REINFORCEMENT LONGITUDINAL SECTION
NOT TO SCALE

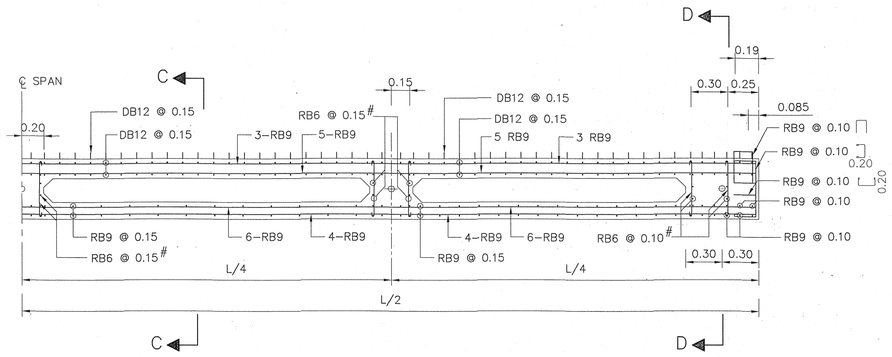

INTERIOR BOX GIRDER REINFORCEMENT LONGITUDINAL SECTION
NOT TO SCALE

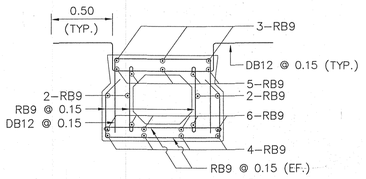

SECTION C – C
SCALE 1 : 25

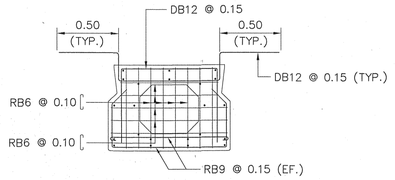

SECTION D – D
SCALE 1 : 25

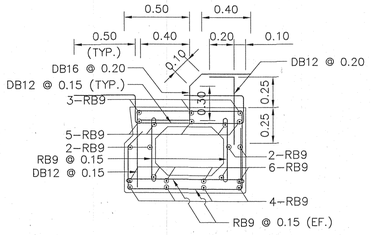

REINFORCEMENT DETAIL (BRIDGE SIGN)
SCALE 1 : 25

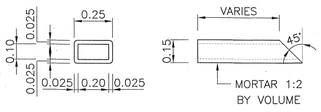

PRECAST MORTAR DRAIN PIPE
SCALE 1 : 20

NOTES :

1. ALL DIMENSIONS SHOWN ARE IN METERS UNLESS OTHERWISE INDICATED.
2. DESIGN LIVE LOAD : HL-93.
3. A MINIMUM ULTIMATE COMPRESSIVE STRENGTH FOR A 150x150x150 MM. CUBE AT 28 DAYS AS FOLLOWS:
   - A) FOR PRESTRESSED PLANK GIRDER 50 MPa. (510 KG/CM^2)
   - B) FOR BRIDGE SLAB TOPPING AND SHEAR KEY 40 MPa. (408 KG/CM^2)
   - C) FOR SIDEWALK AND BARRIER 35 MPa. (357 KG/CM^2)
4. PRESTRESSING STRANDS MAY BE RELEASED AFTER CONCRETE HAS ATTAINED A MINIMUM ULTIMATE COMPRESSIVE STRENGTH OF 35 MPa. (357 KG/CM^2) FOR THE STANDARD CUBE.
5. REBARS SMALLER THAN RB9 MM. SHALL BE TIS 20 GRADE SR 24 PLAIN ROUND BARS, OTHERS SHALL BE TIS 24 GRADE SD 40 DEFORMED BARS UNLESS OTHERWISE INDICATED.
6. PC. BOX BEAM SHALL BE LIFTED AT BOTH ENDS, MIDSPAN LIFTING IS PROHIBITED.
7. THIS TYPE OF PC. BOX BEAM MAY BE USED WITH PIERS FOR SLAB BRIDGE HAVING THE SAME SPAN LENGTH.
8. DOWELS FOR HOLDING PC. BOX BEAM OVER PIERS SHALL BE PROVIDED AT EVERY ALTERNATE GIRDER.
9. ANY SPECIAL RAILINGS, IF DIFFERENT FROM THE ABOVE-MENTIONED MAY BE USED UNDER THE APPROVAL OF THE ENGINEER.
10. DIMENSIONS OF PC. BOX BEAM ARE SHOWN ON DWG NO. BB-101
11. PRESTRESSING STRANDS ARE DESIGNED AS SHOWN ON DWG. NO. BB-103
12. THIS DRAWING IS USED IN CONJUNCTION WITH DWG. NO. BB-101 AND BB-103

KINGDOM OF THAILAND

MINISTRY OF TRANSPORT
DEPARTMENT OF HIGHWAYS

STANDARD DRAWING

0°-45° SKEW PC. BOX BEAM 15.00 M. AND 20.00 M. SPAN REINFORCEMENT DETAILS

REV.2	REVISION 2/2021		JAN 2021
REV.1	REVISION 1/2017		JUN 2017
REV.	REVISION	SIGNATURE	DATE

DESIGNED : D.O.H. & CONSULTANTS **CHECKED :** BUREAU OF LOCATION & DESIGN **DATE :** OCT 2015

SUBMITTED : (DIRECTOR OF LOCATION & DESIGN BUREAU) **SCALE :** AS SHOWN

APPROVED : (FOR DIRECTOR GENERAL) **DWG NO.** BB-102

SHEET NO. 213/R2

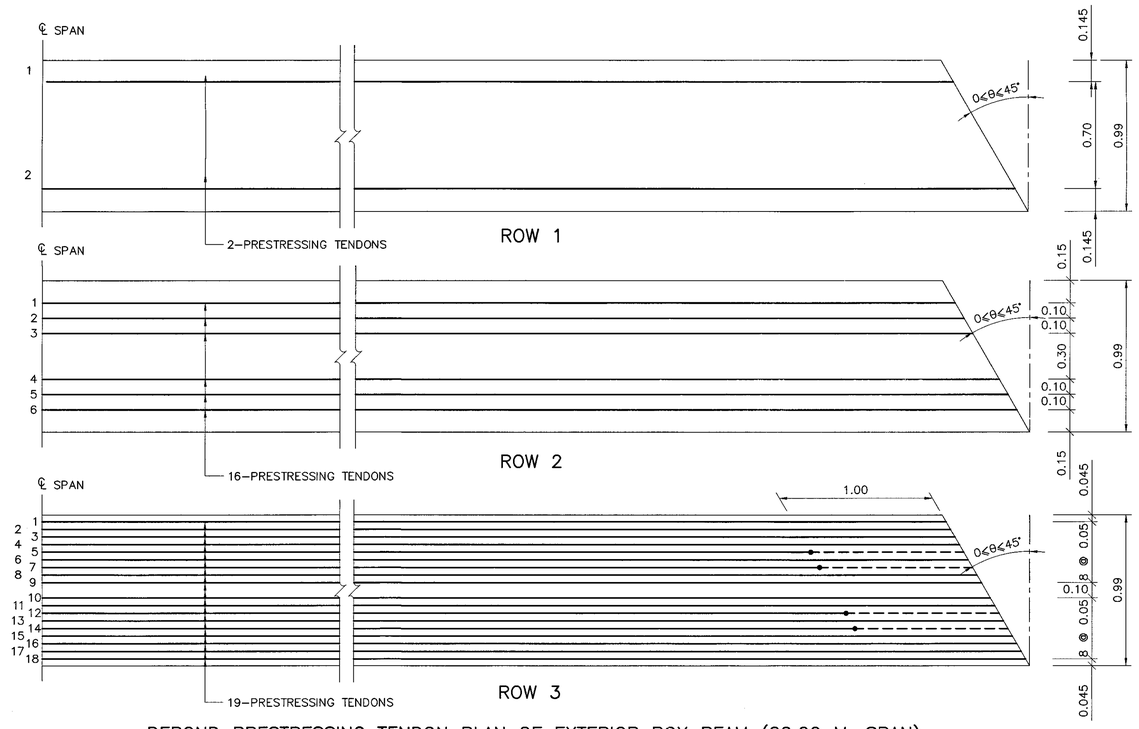

DEBOND PRESTRESSING TENDON PLAN OF EXTERIOR BOX BEAM (20.00 M. SPAN)

SCALE 1 : 20

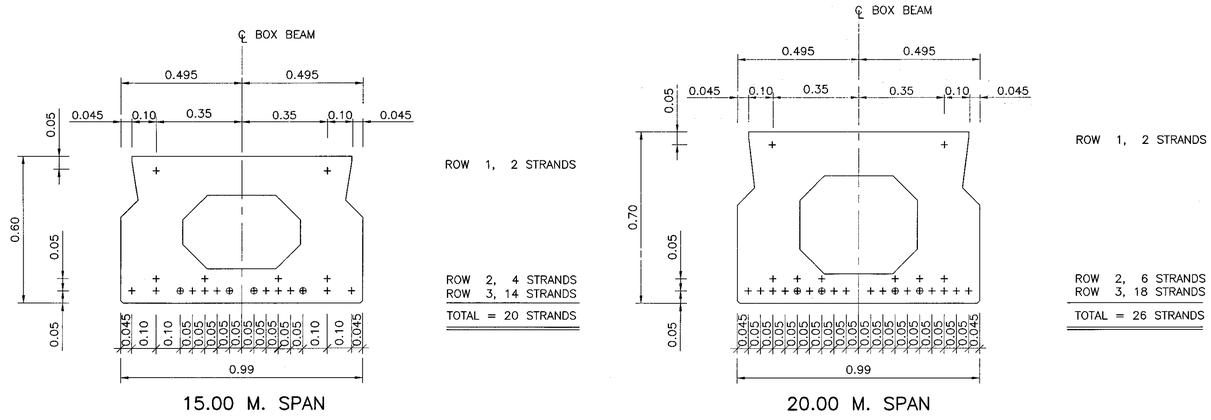

INTERIOR BOX BEAM SECTION

SCALE 1 : 10

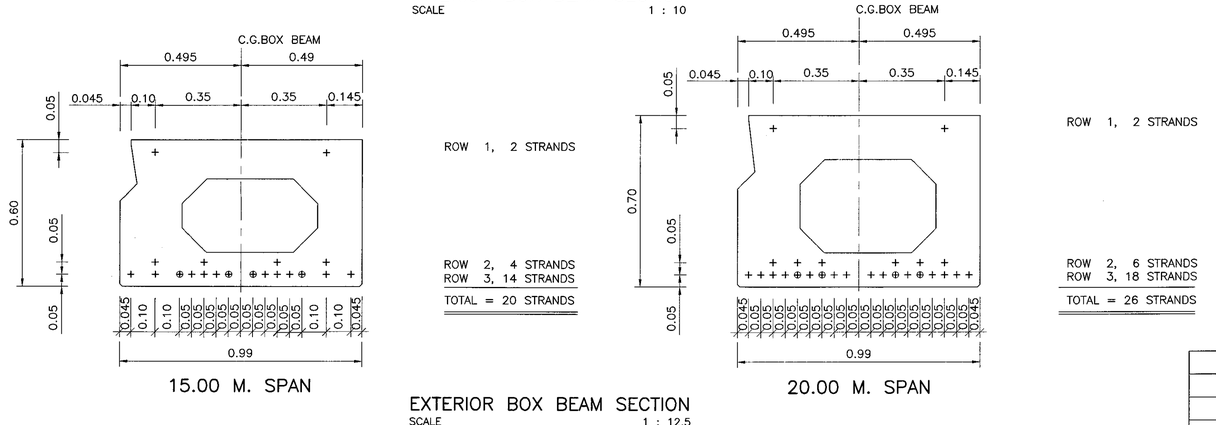

EXTERIOR BOX BEAM SECTION

SCALE 1 : 12.5

NOTES :

1. ALL DIMENSIONS SHOWN ARE IN METERS UNLESS OTHERWISE INDICATED
2. DESIGN LIVE LOAD : HL-93.
3. MIX. DESIGN OF CONCRETE FOR PRESTRESSED BOX BEAM HAVE A MINIMUM ULTIMATE COMPRESSIVE STRENGTH OF 50 MPa. (510 KG/CM^2) FOR CUBE STRENGTH AT 28 DAYS.
4. PRESTRESSING :
   - 4.1 LOW RELAXATION SEVEN WIRE STRANDS ø 12.7 MM. IN ACCORDANCE WITH TIS 420
   - 4.2 MIN CHARACTERISTIC STRENGTH OF STRAND 180 KN.
   - 4.3 INITIAL PRESTRESS SHALL BE 75% OF CHARACTERISTIC STRENGTH.
5. SYMBOLS OF PRESTRESSING STRANDS
   - + ——— BOND PRESTESSING STRANDS
   - ⊕ - - - - DEBOND PRESTESSING STRANDS, DEBONDING LENGTHS FROM GIRDER ENDS
6. THIS DRAWING IS USING IN CONJUNCTION WITH DWG. NO. BB-101 TO BB-102

CONSTRUCTION SEQUENCES

1. CONCRETE OF THE BOX BEAM AFTER A MINIMUM ULTIMATE STRENGTH OF 35 MPa. (357 KG/CM^2) FOR CUBE STRENGTH HAS REACHED. THE PRE-TENSIONING STRANDS MAY BE RELEASED.
2. PLACE THE GIRDERS IN POSITIONS THEY SHALL BE LIFTED AT BOTH ENDS. THE MIDSPAN LIFTING IS PROHIBITTED.
3. THE NEXT ADJACENT GIRDER SHALL BE CONNECTED AGAINST THE FIRST ONE BY SHEAR CONNECTORS AS SHOWN IN DWG. NO. BB-101
4. THE CONCRETE OF SHEAR KEYS IS THE SAME PROPERTIES AS THE CAST-IN-SITU SLAB.
5. WEARING SURFACE IS NOT ALLOWABLE EXCEPT THAT WATERPROOF IS INSTALLED

REF.	REVISION	SIGNATURE	DATE

KINGDOM OF THAILAND

MINISTRY OF TRANSPORT

DEPARTMENT OF HIGHWAYS

STANDARD DRAWING

0°–45° SKEW PC. BOX BEAM 15.00 M. AND 20.00 M. SPAN STRAND ARRANGEMENT DETAILS

DESIGNED : D.O.H. & CONSULTANTS	**CHECKED :** BUREAU OF LOCATION & DESIGN	**DATE :** OCT 2015
SUBMITTED : (DIRECTOR OF LOCATION & DESIGN BUREAU)		**SCALE :** AS SHOWN
APPROVED : (FOR DIRECTOR GENERAL)		**DWG NO.** BB-103
		SHEET NO. 214

D:\std dwg 2015\BB-103(REV00)

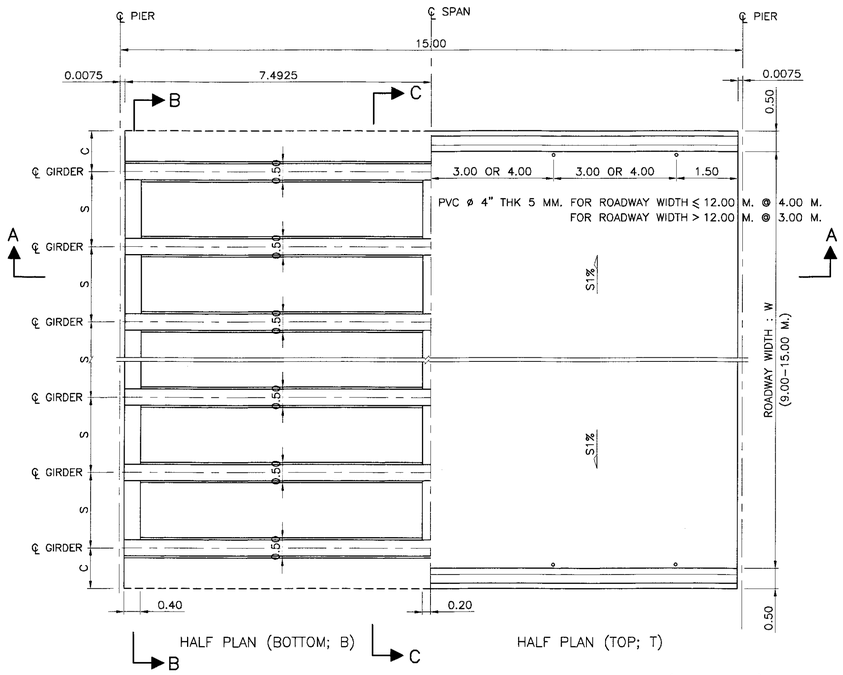

DECK PLAN FOR GIRDER SPAN LENGTH 15.00 M. (STRAIGHT)
SCALE 1 : 75

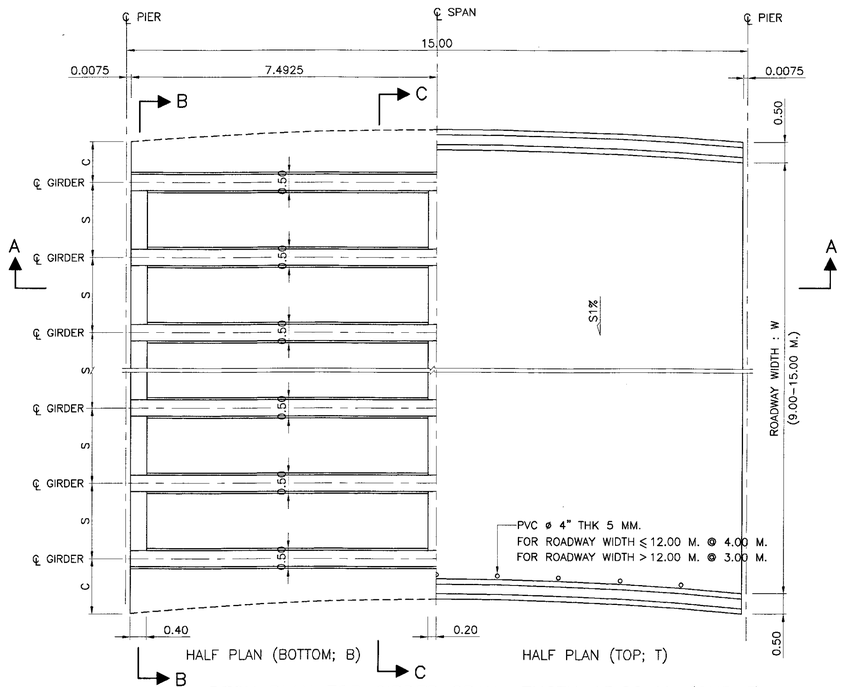

DECK PLAN FOR GIRDER SPAN LENGTH 15.00 M. (CURVE)
SCALE 1 : 75

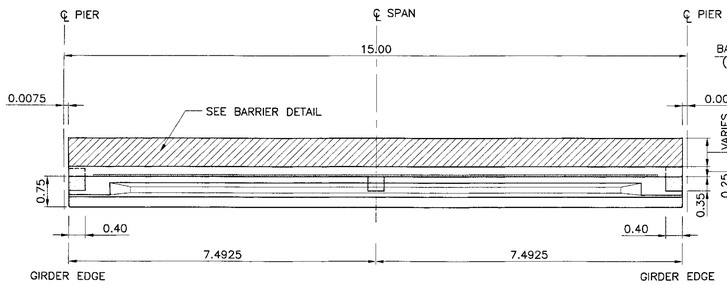

SECTION A – A
SCALE 1 : 75

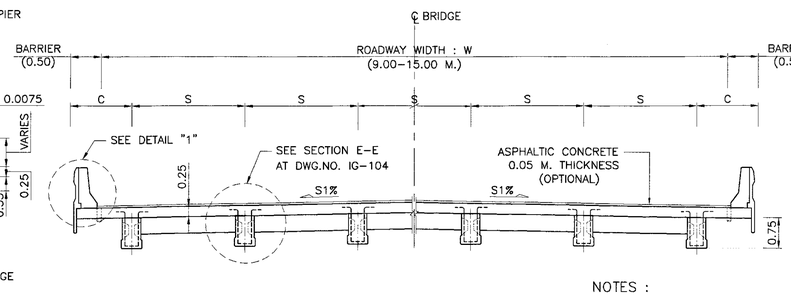

SECTION B – B
SCALE 1 : 75

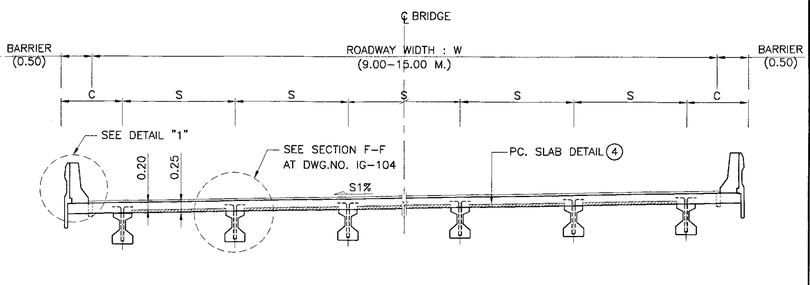

SECTION C – C
SCALE 1 : 75

TABLE OF W,S,C AND NO. OF I–GIRDER

ROADWAY WIDTH W (M.)	NO. OF I–GIRDER	SPACING S (M.)	CANTILEVER C (M.)	
			STRAIGHT	CURVED
9.00	5	4 @ 2.00	1.00	0.50–1.50
10.00	6	5 @ 1.80	1.00	0.50–1.50
11.00	6	5 @ 2.00	1.00	0.50–1.50
12.00	7	6 @ 1.833	1.00	0.50–1.50
15.00	8	7 @ 2.00	1.00	0.50–1.50
VARIES	n	2.00 (MAX.)	0.50–1.00	0.50–1.50

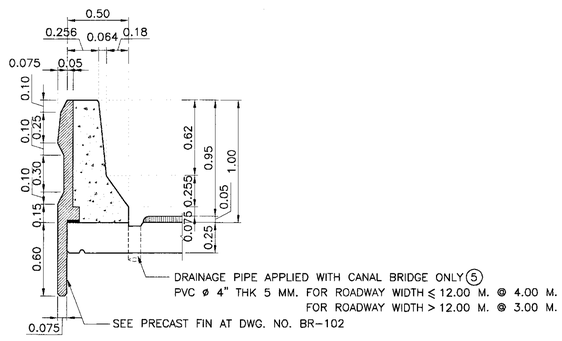

DETAIL "1"
SCALE 1 : 25

NOTES :

1. ALL DIMENSIONS SHOWN ARE IN METERS UNLESS OTHERWISE INDICATED.
2. DESIGN LIVE LOAD : HL–93.
3. THIS DRAWING IS USED IN CONJUNCTION WITH DWG. NO. IG–102 TO IG–104

④ PRECAST FORM SHALL BE AS FOLLOWS:

4.1 CONCRETE SHALL HAVE A MINIMUM ULTIMATE COMPRESSIVE STRENGTH OF 50 MPa. (510 KG/CM^2) FOR 15x15x15 CM. CUBE AT 28 DAYS, CEMENT SHALL CONFORM TO TIS. 15 TYPE I PORTLAND CEMENT OR APPROVAL TYPE.

4.2 THE WEIGHT OF PRECAST FORM SHALL BE LESS THAN 120 KG/M^2

4.3 ALL PRECAST FORM SHALL CARRY THE TOTAL SAFE LOAD NOT LESS THAN 750 KG/M^2 (INCLUDED THE WEIGHT OF PRECAST FORM)

4.4 THE WIDTH OF PRECAST FORM SHALL BE GREATER THAN 0.35 M.

4.5 ENDS OF PRECAST FORM SHALL BE SEATED OVER THE SUPPORT NOT LESS THAN 7.5 CM. MOTAR WITH THE MIXED RATIO (CEMENT:SAND) OF 1:2 SHALL BE USED TO ADJUST THE ALIGNMENT OF THE PRECAST AND TO SMOOTHEN

4.6 CONCRETE PROPERTIES SHALL BE CONFORMED TO THE SPECIFICATION OF PRESTRESSED CONCRETE GIRDERS AND ALL PRESTRESSING STRANDS SHALL BE CONFORMED TO TIS.420 OR TIS 95.

4.7 PRECAST FORM SHALL NOT BEND OR DEFLECT. THE TOLERANCE OF ALL DIMENSIONS OF PRECAST FORM SHALL BE WITHIN THE ACCEPTABLE LIMITS.

4.8 PRIOR TO CONSTRUCTION, THE CONTRACTOR SHALL PREPARE THE SHOP DRAWINGS OF PRECAST FORM INCLUDING ALL CALCULATION AND SUPPORTED DOCUMENTS. THE DOCUMENTS SHALL BE CERTIFIED BY ENGINEERS AS THE REQUIREMENTS OF COUNCIL OF ENGINEERS AND SUBMITTED TO THE DESIGNERS FOR APPROVED.

4.9 THE BOTTOM SURFACE OF PRECAST FORM SHALL BE SMOOTHENED.

⑤ FOR SINGLE CROSS SLOPE, DRAINAGE PIPES SHALL BE AT LOWER SLOPE SIDE AND REDUCED THE SPACING HALF

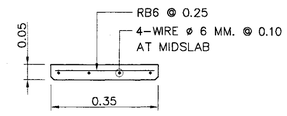

PRECAST FORM DETAIL
SCALE 1 : 10

REV.	REVISION	SIGNATURE	DATE
REV.1	REVISION 1/2017		JUN 2017

KINGDOM OF THAILAND

MINISTRY OF TRANSPORT
DEPARTMENT OF HIGHWAYS

STANDARD DRAWING

0°–45° SKEW I–GIRDER 15.00 M. SPAN (FULL JOINT)

BRIDGE DECK DIMENSION

DESIGNED : D.O.H. & CONSULTANTS | **CHECKED :** BUREAU OF LOCATION & DESIGN | **DATE :** OCT 2015

SUBMITTED : (DIRECTOR OF LOCATION & DESIGN BUREAU) | **SCALE :** AS SHOWN

APPROVED : (FOR DIRECTOR GENERAL) | **DWG NO.** IG–101

SHEET NO. 215/RI

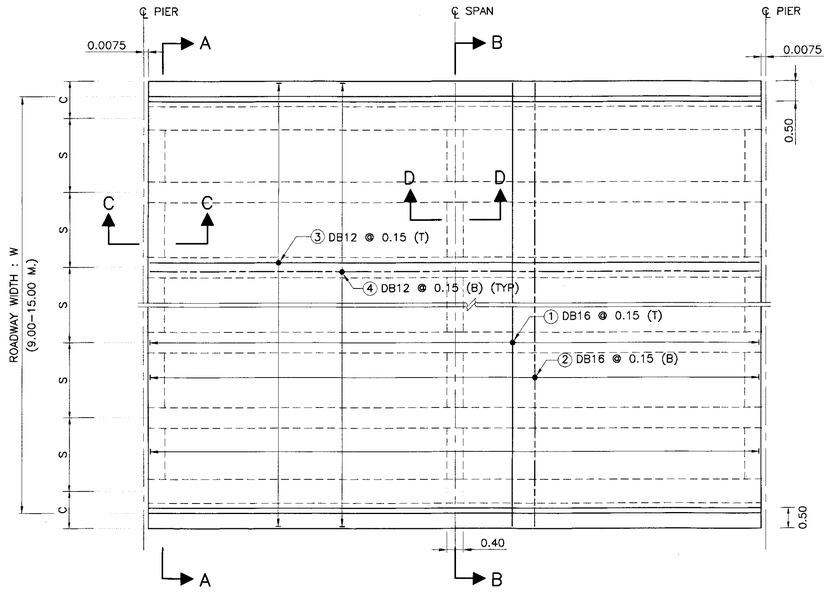

PLAN OF REINFORCEMENT SLAB (STRAIGHT)
SCALE 1 : 75

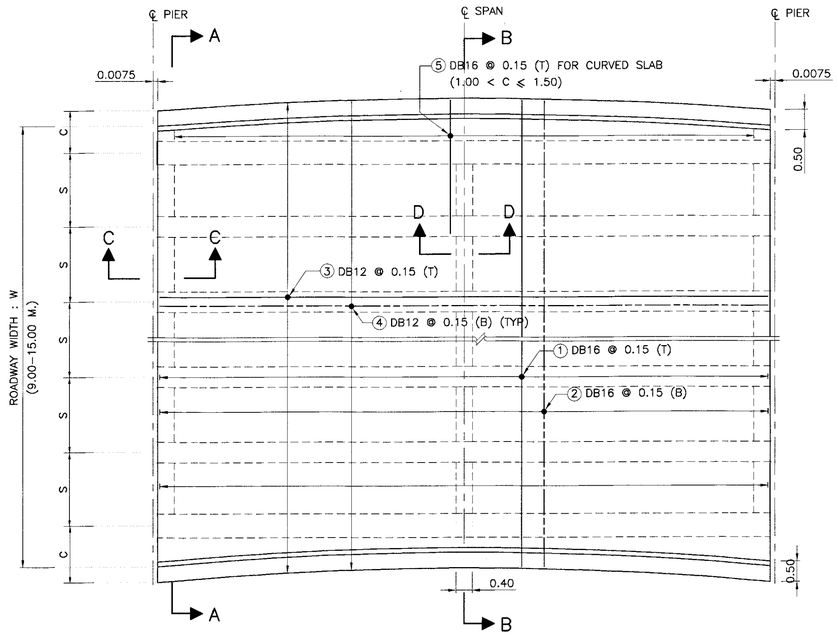

PLAN OF REINFORCEMENT SLAB (CURVE)
SCALE 1 : 75

TABLE OF DECK SLAB REINFORCEMENT

BAR MARK	DB	SHAPE
①	DB16	①
②	DB16	②
③	DB12	③ , ④
④	DB12	
⑤	DB16	⑤

TABLE OF END AND MIDDLE DIAPHRAGM REINFORCEMENT

BAR MARK	DB	SHAPE
⑥	DB12	⑥
⑦	DB25	⑦
⑧	DB20	0.10 ⑧
⑨	DB25	0.25 WELDING 0.10 ⑨

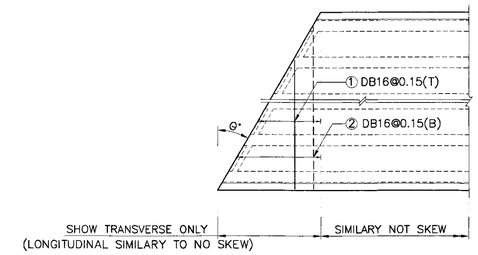

SKEW REINFORCEMENT DETAIL
NOT TO SCALE

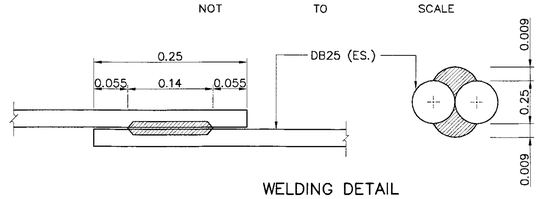

WELDING DETAIL
NOT TO SCALE

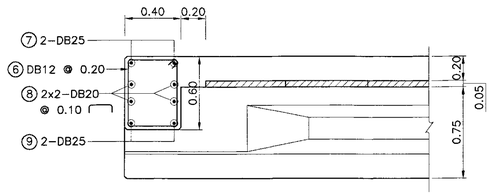

SECTION C – C
SCALE 1 : 25

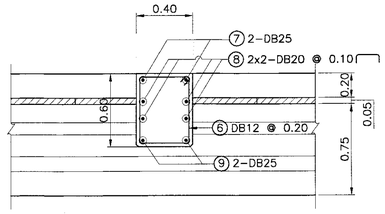

SECTION D – D
SCALE 1 : 25

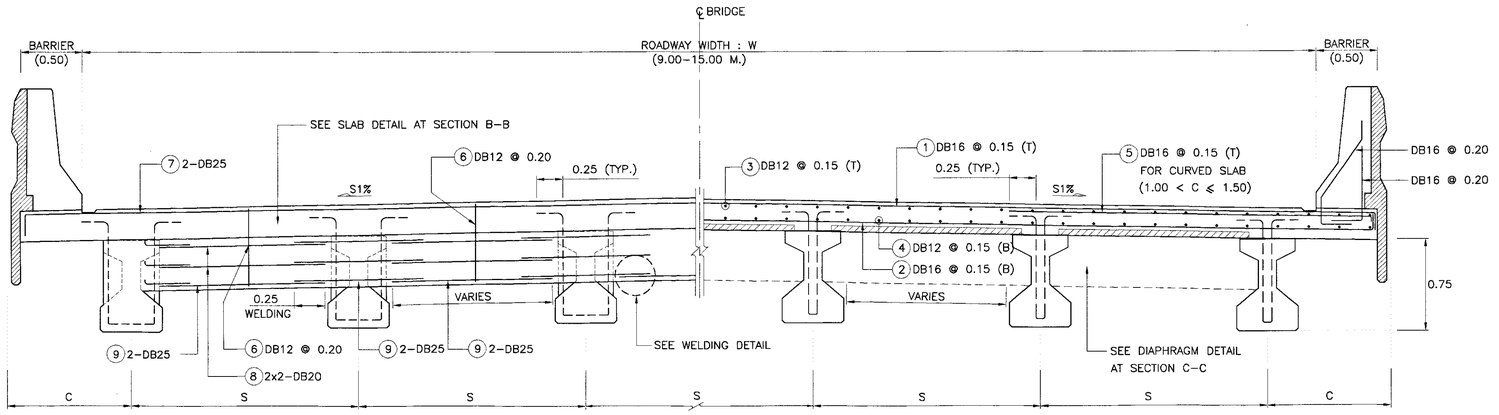

SECTION A – A

SECTION B – B

CROSS SECTION OF REINFORCEMENT SLAB AND DIAPHRAGM
NOT TO SCALE

NOTES :

1. ALL DIMENSIONS SHOWN ARE IN METERS UNLESS OTHERWISE INDICATED.
2. DESIGN LIVE LOAD : HL–93.
3. CONCRETE FOR DECK SLAB SHALL HAVE A MINIMUM ULTIMATE COMPRESSIVE STRENGTH OF 35 MPa. (357 KG/CM^2) FOR 15x15x15 CM. CUBE AT 28 DAYS, CEMENT SHALL CONFORM TO TIS. 15 TYPE I PORTLAND CEMENT OR APPROVAL TYPE.
4. REINFORCING STEEL SHALL CONFORM TO TIS. 20 GRADE SR 24 FOR ROUND BARS AND TIS. 24 GRADE SD 40 FOR DEFORMED BARS.
5. THE REINFORCING STEEL NO.8 AND 9 SHALL BE EMBEDED AT STAGE OF GIRDER CASTING FROM FACTORY
6. THIS DRAWING IS USED IN CONJUNCTION WITH DWG. NO. IG–101, IG–103 AND IG–104

REV.	REVISION	SIGNATURE	DATE
REV.1	REVISION 1/2017		JUN 2017

KINGDOM OF THAILAND
MINISTRY OF TRANSPORT
DEPARTMENT OF HIGHWAYS

STANDARD DRAWING

0°–45° SKEW I–GIRDER 15.00 M. SPAN (FULL JOINT)

BRIDGE DECK REINFORCEMENT

DESIGNED : D.O.H. & CONSULTANTS	**CHECKED :** BUREAU OF LOCATION & DESIGN	**DATE :** OCT 2015
SUBMITTED : (DIRECTOR OF LOCATION & DESIGN BUREAU)		**SCALE :** AS SHOWN
APPROVED : (FOR DIRECTOR GENERAL)		**DWG NO.** IG–102
		SHEET NO. 216/RI

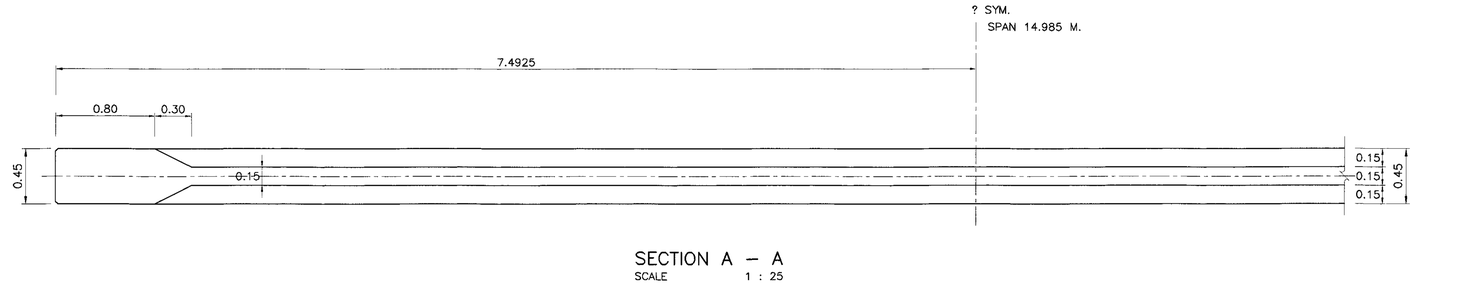

SECTION A – A
SCALE 1 : 25

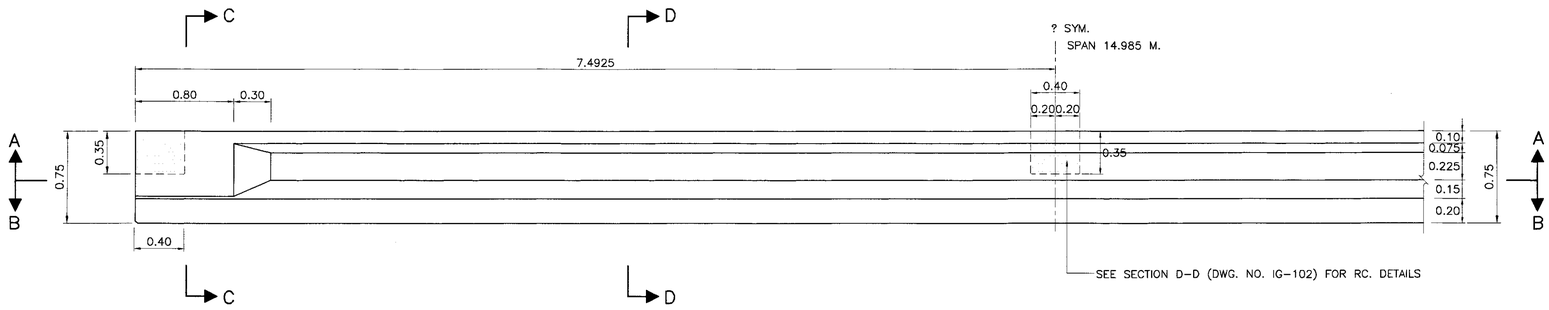

ELEVATION OF GIRDER SPAN LENGTH 15.00 M.
SCALE 1:25

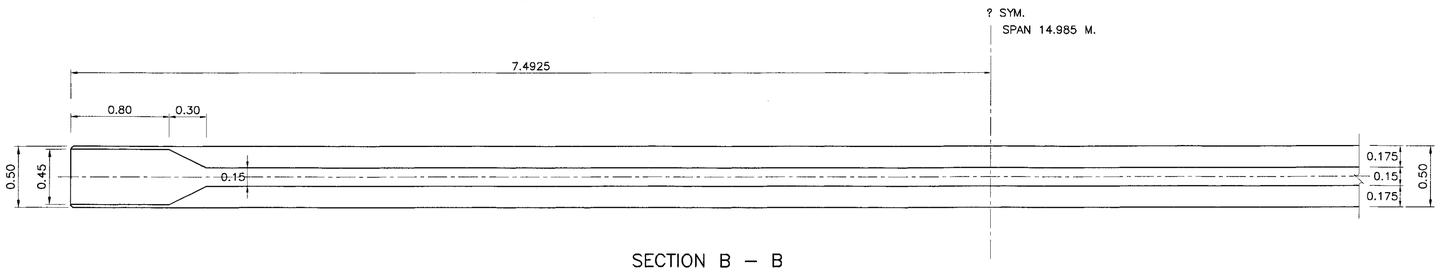

SECTION B – B
SCALE 1 : 25

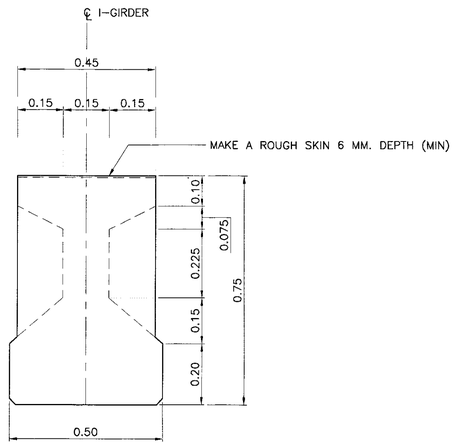

SECTION C – C
SCALE 1 : 10

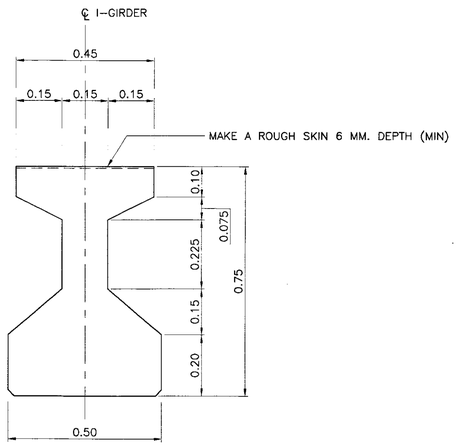

SECTION D – D
SCALE 1 : 10

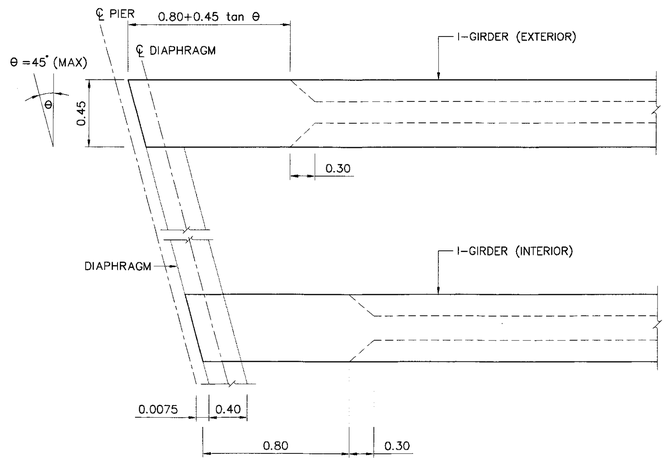

I–GIRDER PLAN
SCALE 1 : 25

NOTES :

1. ALL DIMENSIONS SHOWN ARE IN METERS UNLESS OTHERWISE INDICATED.
2. DESIGN LIVE LOAD : HL–93.
3. CONCRETE FOR PRECAST I–GIRDER SHALL HAVE A MINIMUM ULTIMATE COMPRESSIVE STRENGTH OF 50 MPa. (510 KG/CM^2) FOR 15x15x15 CM. CUBE AT 28 DAYS, CEMENT SHALL CONFORM TO TIS. 15 TYPE I PORTLAND CEMENT OR APPROVAL TYPE.
4. THIS DRAWING IS USED IN CONJUNCTION WITH DWG. NO. IG–101, IG–102 AND IG–104

REV.	REVISION	SIGNATURE	DATE
REV.1	REVISION 1/2017		JUN 2017

KINGDOM OF THAILAND

MINISTRY OF TRANSPORT
DEPARTMENT OF HIGHWAYS

STANDARD DRAWING

0°–45° SKEW I–GIRDER 15.00 M. SPAN (FULL JOINT)

GIRDER DIMENSION

DESIGNED : D.O.H. & CONSULTANTS	**CHECKED :** BUREAU OF LOCATION & DESIGN	**DATE :** OCT 2015
SUBMITTED : (DIRECTOR OF LOCATION & DESIGN BUREAU)		**SCALE :** AS SHOWN
APPROVED : (FOR DIRECTOR GENERAL)		**DWG NO.** IG–103
		SHEET NO. 217/RI

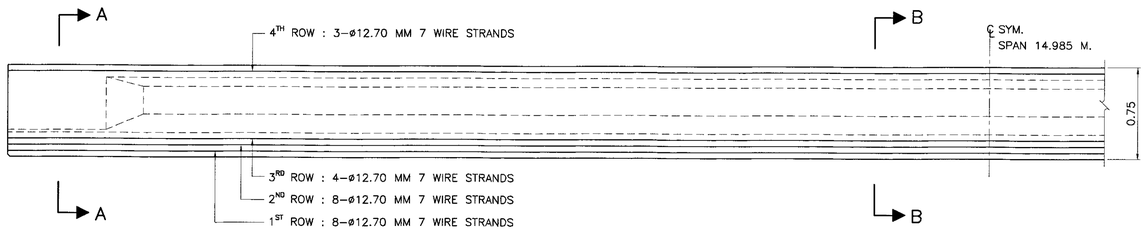

PRESTRESSING DETAIL
SCALE 1 : 25

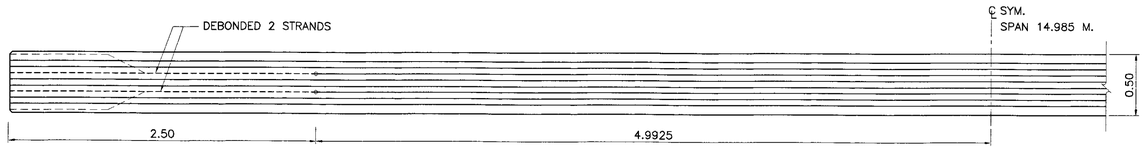

POSITION OF DEBONDED 1ST ROW
SCALE 1 : 25

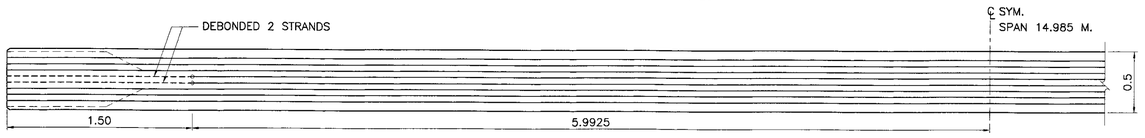

POSITION OF DEBONDED 2ND ROW
SCALE 1 : 25

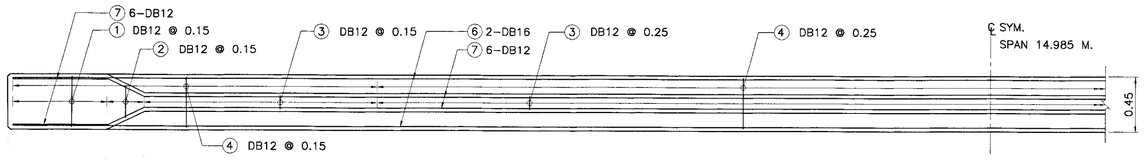

SECTION C – C
SCALE 1 : 25

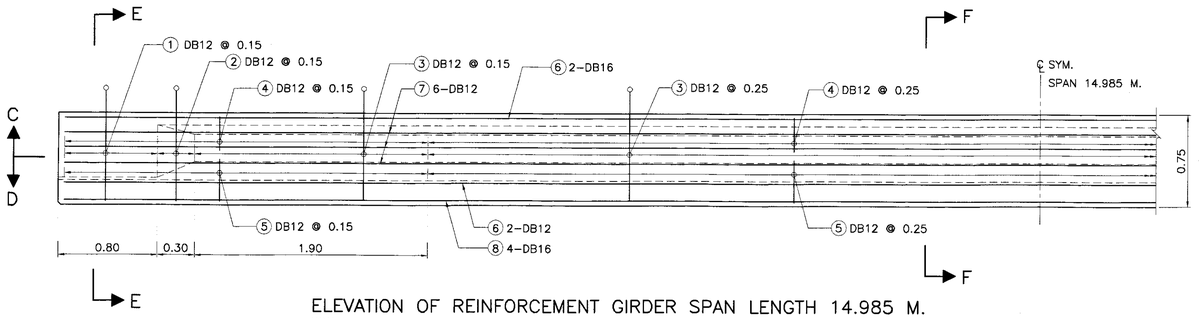

ELEVATION OF REINFORCEMENT GIRDER SPAN LENGTH 14.985 M.
SCALE 1 : 25

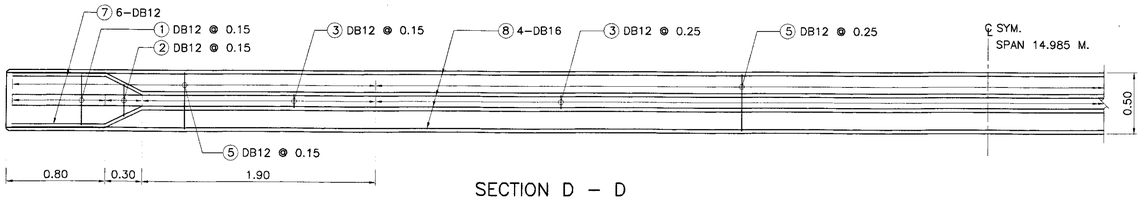

SECTION D – D
SCALE 1 : 25

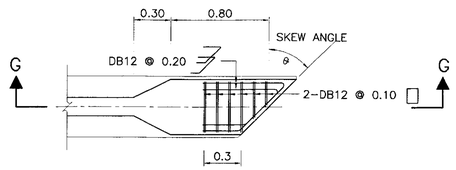

EXTRA REINFORCEMENT AT THE END (SKEW GIRDER)
SCALE 1 : 25

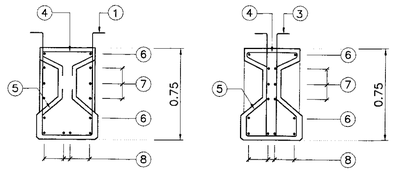

SECTION E – E
SCALE 1 : 25

SECTION F – F
SCALE 1 : 25

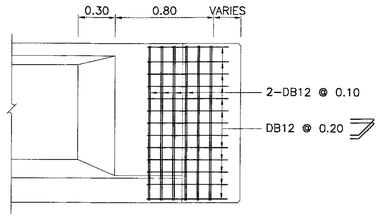

SECTION G – G
SCALE 1 : 25

TABLE OF GIRDER REINFORCEMENT

NO.	SIZE	SHAPE
1.	DB12	0.25 0.25 0.25 0.25 0.25 0.25 0.37 0.04 0.90 0.90 0.90 0.20 0.37 VARIES 0.09 0.20 0.12 0.42
2.	DB12	
3.	DB12	
4.	DB12	
5.	DB12	14.90
6.	DB16	0.76 0.30 12.865 0.30 0.76 0.10
7.	DB12	14.90 0.10
8.	DB16	

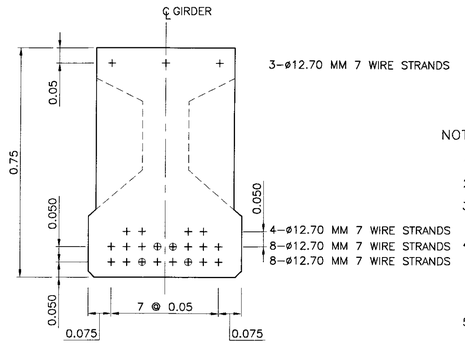

SECTION A – A
SCALE 1 : 10

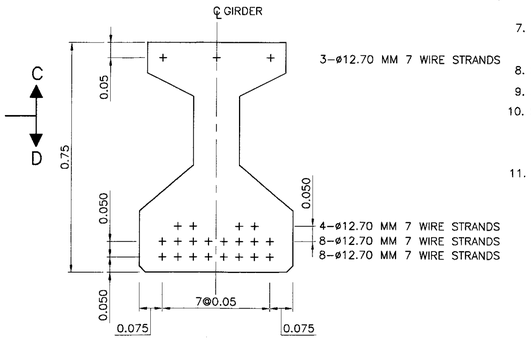

SECTION B – B
SCALE 1 : 10

SYMBOL AND DISTANCE OF DEBOND

+	BOND STRAND	19 – STRANDS
⊕	DEBOND STRAND FROM ENDS OF GIRDER	4 – STRANDS
		23 – STRANDS

NOTES :

1. ALL DIMENSIONS SHOWN ARE IN METERS UNLESS OTHERWISE INDICATED.
2. DESIGN LIVE LOAD : HL–93.
3. MIX. DESIGN OF CONCRETE FOR PRESTRESSED I–GIRDER BEAM HAVE A MINIMUM ULTIMATE COMPRESSIVE STRENGTH OF 50 MPa. (510 KG/CM^2) FOR CUBE STRENGTH AT 28 DAYS.
4. PRESTRESSING :
   4.1 LOW RELAXATION SEVEN WIRE STRANDS ø 12.7 MM. IN ACCORDANCE WITH TIS 420
   4.2 MIN CHARACTERISTIC STRENGTH OF STRAND 180 KN.
   4.3 INITIAL PRESTRESS SHALL BE 75% OF CHARACTERISTIC STRENGTH.
5. POSITION OF DEBONDED SHALL BE SPECIFIED IN THIS DRAWING AS FOLLOW:
   5.1 POINT OF DEBONDED MEANS STARTING POINT TO END OF GIRDER
   5.2 DEBONED MEANS PERFORMING FOR NO CONTACT BETWEEN STRAND AND CONCRETE.
6. AFTER THE COMPRESSIVE STRENGTH OF CONCRETE OF THE BRIDGE GIRDER GAINS THE MINIMUM COMPRESSIVE STRENGTH TESTED BY USING THE CONCRETE CUBE 15x15x15 CM. OF 40 MPa. (410 KG/CM^2), THE JACKING FORCES SHALL BE APPLIED.
7. LIFTING METHOD SHALL BE LIFTING UP AT BOTH END OF GIRDER. DO NOT LIFT UP AT THE MIDDLE OF GIRDER.
8. SPACING OF GIRDERS SHALL BE LESS THAN 2.00 M.
9. SKEW ANGLE SHALL BE LESS THAN 45 DEGREE.
10. SYMBOLS OF PRESTRESSING STRANDS
    + ——— BOND PRESTESSING STRANDS (ø12.7 MM–7 WIRE STRANDS)
    ⊕ ------ DEBOND PRESTESSING STRANDS (ø12.7 MM–7 WIRE STRANDS)
11. THIS DRAWING IS USED IN CONJUNCTION WITH DWG. NO. IG–101 TO IG–103

REV.	REVISION	SIGNATURE	DATE
REV.1	REVISION 1/2017		JUN 2017

KINGDOM OF THAILAND
MINISTRY OF TRANSPORT
DEPARTMENT OF HIGHWAYS

STANDARD DRAWING
0°–45° SKEW I–GIRDER 15.00 M. SPAN (FULL JOINT)
GIRDER PRESTRESSING AND REINFORCEMENT

DESIGNED : D.O.H. & CONSULTANTS **CHECKED :** BUREAU OF LOCATION & DESIGN **DATE :** OCT 2015

SUBMITTED : (DIRECTOR OF LOCATION & DESIGN BUREAU) **SCALE :** AS SHOWN

APPROVED : (FOR DIRECTOR GENERAL) **DWG NO.** IG–104

SHEET NO. 218/RI

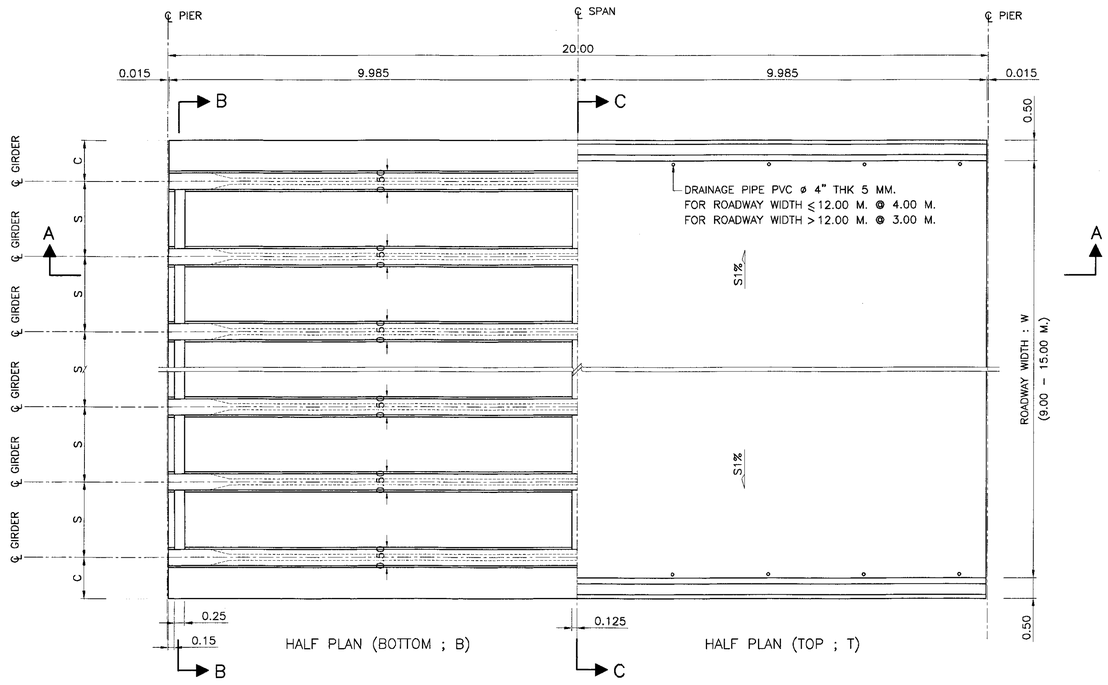

DECK PLAN FOR GIRDER SPAN LENGTH 20.00 M.
SCALE 1 : 75

TABLE OF W,S,C AND NO. OF I–GIRDER

ROADWAY WIDTH W (M.)	NO. OF I–GIRDER	SPACING S (M.)	CANTILEVER C (M.)
9.00	5	4 @ 2.00	1.00
10.00	6	5 @ 1.80	1.00
11.00	6	5 @ 2.00	1.00
12.00	7	6 @ 1.833	1.00
15.00	8	7 @ 2.00	1.00
VARIES	n	2.00 (MAX.)	0.50–1.00

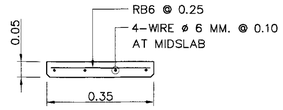

PRECAST FORM DETAIL
SCALE 1 : 10

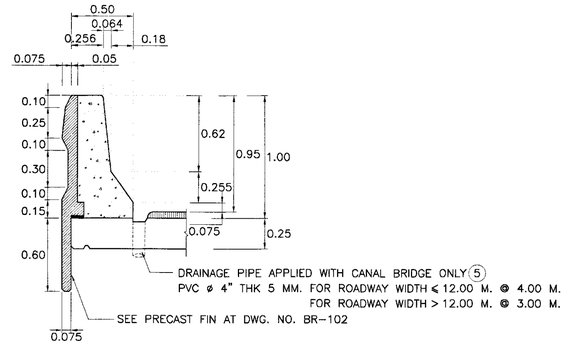

DETAIL "1"
SCALE 1 : 25

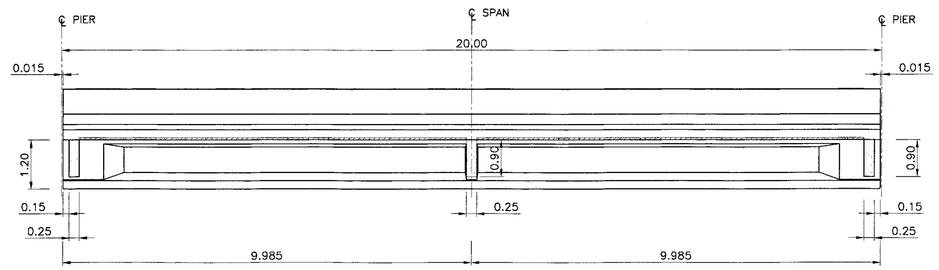

SECTION A – A
SCALE 1 : 75

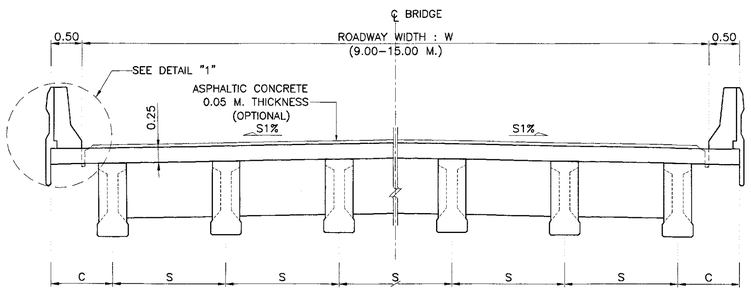

SECTION B – B
SCALE 1 : 75

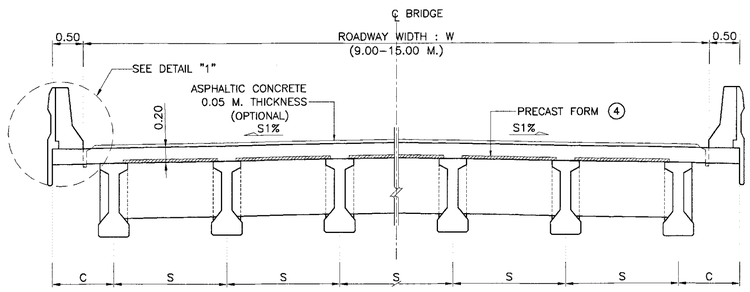

SECTION C – C
SCALE 1 : 75

NOTES :

1. ALL DIMENSIONS SHOWN ARE IN METERS UNLESS OTHERWISE INDICATED.
2. DESIGN LIVE LOAD : HL–93.
3. THIS DRAWING IS USED IN CONJUNCTION WITH DWG. NO. IG–202 TO IG–206
4. PRECAST FORM SHALL BE AS FOLLOWS:
   - 4.1 CONCRETE SHALL HAVE A MINIMUM ULTIMATE COMPRESSIVE STRENGTH OF 50 MPo. (510 KG/CM^2) FOR 15x15x15 CM. CUBE AT 28 DAYS, CEMENT SHALL CONFORM TO TIS. 15 TYPE I PORTLAND CEMENT OR APPROVAL TYPE.
   - 1.2 THE WEIGHT OF PRECAST FORM SHALL BE LESS THAN 120 KG/M^2
   - 4.3 ALL PRECAST FORM SHALL CARRY THE TOTAL SAFE LOAD NOT LESS THAN 750 KG/M^2 (INCLUDED THE WEIGHT OF PRECAST FORM)
   - 4.4 THE WIDTH OF PRECAST FORM SHALL BE GREATER THAN 0.35 M.
   - 4.5 ENDS OF PRECAST FORM SHALL BE SEATED OVER THE SUPPORT NOT LESS THAN 7.5 CM. MOTAR WITH THE MIXED RATIO (CEMENT:SAND) OF 1:2 SHALL BE USED TO ADJUST THE ALIGNMENT OF THE PRECAST AND TO SMOOTHEN
   - 4.6 CONCRETE PROPERTIES SHALL BE CONFORMED TO THE SPECIFICATION OF PRESTRESSED CONCRETE GIRDERS AND ALL PRESTRESSING STRANDS SHALL BE CONFORMED TO TIS.420 OR TIS 95.
   - 4.7 PRECAST FORM SHALL NOT BEND OR DEFLECT. THE TOLERANCE OF ALL DIMENSIONS OF PRECAST FORM SHALL BE WITHIN THE ACCEPTABLE LIMITS.
   - 4.8 PRIOR TO CONSTRUCTION, THE CONTRACTOR SHALL PREPARE THE SHOP DRAWINGS OF PRECAST FORM INCLUDING ALL CALCULATION AND SUPPORTED DOCUMENTS. THE DOCUMENTS SHALL BE CERTIFIED BY ENGINEERS AS THE REQUIREMENTS OF COUNCIL OF ENGINEERS AND SUBMITTED TO THE DESIGNERS FOR APPROVED.
   - 4.9 THE BOTTOM SURFACE OF PRECAST FORM SHALL BE SMOOTHENED.
5. FOR SINGLE CROSS SLOPE, DRAINAGE PIPES SHALL BE AT LOWER SLOPE SIDE AND REDUCED THE SPACING HALF

REV.	REVISION	SIGNATURE	DATE
REV.1	REVISION 1/2017		JUN 2017

KINGDOM OF THAILAND
MINISTRY OF TRANSPORT
DEPARTMENT OF HIGHWAYS

STANDARD DRAWING
0°–45° SKEW I–GIRDER 20.00 M. SPAN (FULL JOINT)
BRIDGE DECK DIMENSION

DESIGNED : D.O.H. & CONSULTANTS	**CHECKED :** BUREAU OF LOCATION & DESIGN	**DATE :** OCT 2015
SUBMITTED : (DIRECTOR OF LOCATION & DESIGN BUREAU)		**SCALE :** AS SHOWN
APPROVED : (FOR DIRECTOR GENERAL)		**DWG NO.** IG–201
		SHEET NO. 219/RI

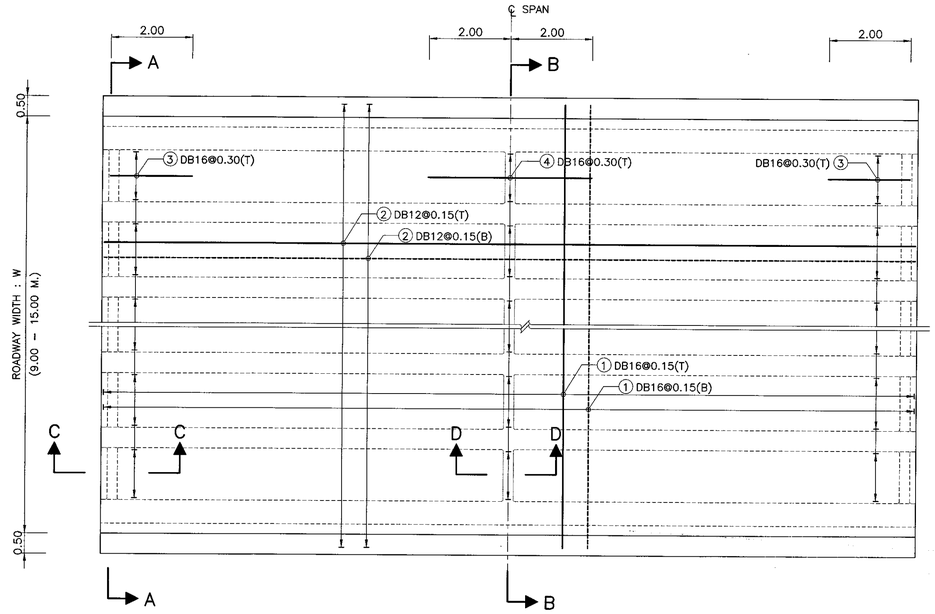

PLAN OF SLAB REINFORCEMENT
SCALE 1 : 75

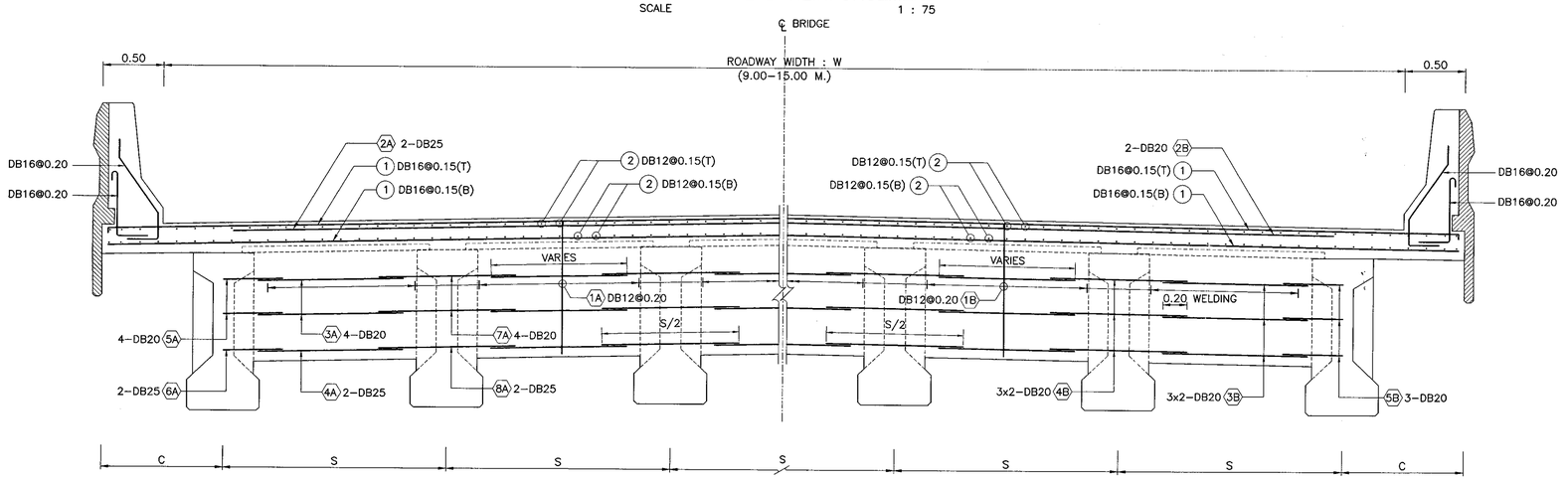

HALF SECTION A – A

HALF SECTION B – B

CROSS SECTION OF REINFORCEMENT SLAB AND DIAPHRAGM
SCALE 1 : 25

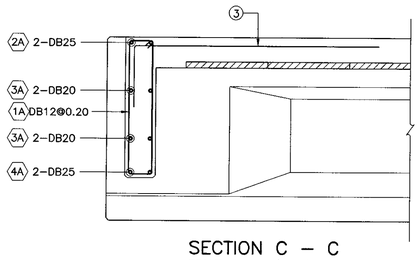

SECTION C – C
SCALE 1 : 25

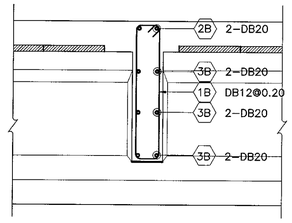

SECTION D – D
SCALE 1 : 25

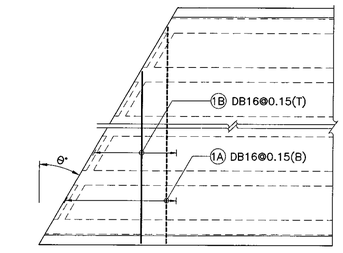

SHOW TRANSVERSE ONLY SIMILARY NOT SKEW
(LONGITUDINAL SIMILARY TO NO SKEW)
VARIES 1A
VARIES 1B

SKEW REINFORCEMENT DETAIL
SCALE 1 : 25

TABLE OF REINFORCEMENT (EXTERIOR DIAPHRAGM)

BAR NO.	BAR SIZE	SHAPE
1A	DB12	0.19, 1.09, 1A; W+1.00–2C 2A; S/2+0.40 3A; S/2+0.40 4A; S/4+0.10 5A; S/4+0.10 6A; 0.19; S/2 7A . 8A
2A	DB25	
3A	DB20	
4A	DB25	
5A	DB20	
6A	DB25	
7A	DB20	
8A	DB25	

TABLE OF REINFORCEMENT (INTERIOR DIAPHRAGM)

BAR NO.	BAR SIZE	SHAPE
1B	DB12	0.19, 1.09, 1B; W+1.00–2C 2B; S/2+0.40 3B; S/2 4B; S/4+0.10 5B; 0.19
2B	DB20	
3B	DB20	
4B	DB20	
5B	DB20	

TABLE OF REINFORCEMENT (SLAB)

BAR NO.	BAR SIZE	SHAPE
1	DB16	W+0.70 1; 19.91 2; 2.00, 0.50 3; 4.00 4
2	DB12	
3	DB16	
4	DB16	

NOTE :

1. ALL DIMENSIONS SHOWN ARE IN METERS UNLESS OTHERWISE INDICATED.
2. DESIGN LIVE LOAD : HL–93.
3. CONCRETE FOR DECK SLAB SHALL HAVE A MINIMUM ULTIMATE COMPRESSIVE STRENGTH OF 35 MPa. (357 KG/CM^2) FOR 15x15x15 CM. CUBE AT 28 DAYS, CEMENT SHALL CONFORM TO TIS. 15 TYPE I PORTLAND CEMENT OR APPROVAL TYPE.
4. REINFORCING STEEL SHALL CONFORM TO TIS. 20 GRADE SR 24 FOR ROUND BARS AND TIS. 24 GRADE SD 40 FOR DEFORMED BARS.
5. THE REINFORCING STEEL NO.5A, 6A, 7A, 8A, 4B AND 5B SHALL BE EMBEDED AT STAGE OF GIRDER CASTING FROM FACTORY
6. THIS DRAWING IS USED IN CONJUNCTION WITH DWG NO.IG–201, IG–203 TO IG–206

REF.	REVISION	SIGNATURE	DATE

KINGDOM OF THAILAND

MINISTRY OF TRANSPORT
DEPARTMENT OF HIGHWAYS

STANDARD DRAWING

0°–45° SKEW I–GIRDER 20.00 M. SPAN (FULL JOINT)
BRIDGE DECK REINFORCEMENT

DESIGNED : D.O.H. & CONSULTANTS	CHECKED : BUREAU OF LOCATION & DESIGN	DATE : OCT 2015
SUBMITTED : (DIRECTOR OF LOCATION & DESIGN BUREAU)		SCALE : AS SHOWN
APPROVED : (FOR DIRECTOR GENERAL)		DWG NO. IG–202
		SHEET NO. 220

D:\std dwg 2015\IG–202(REV00)

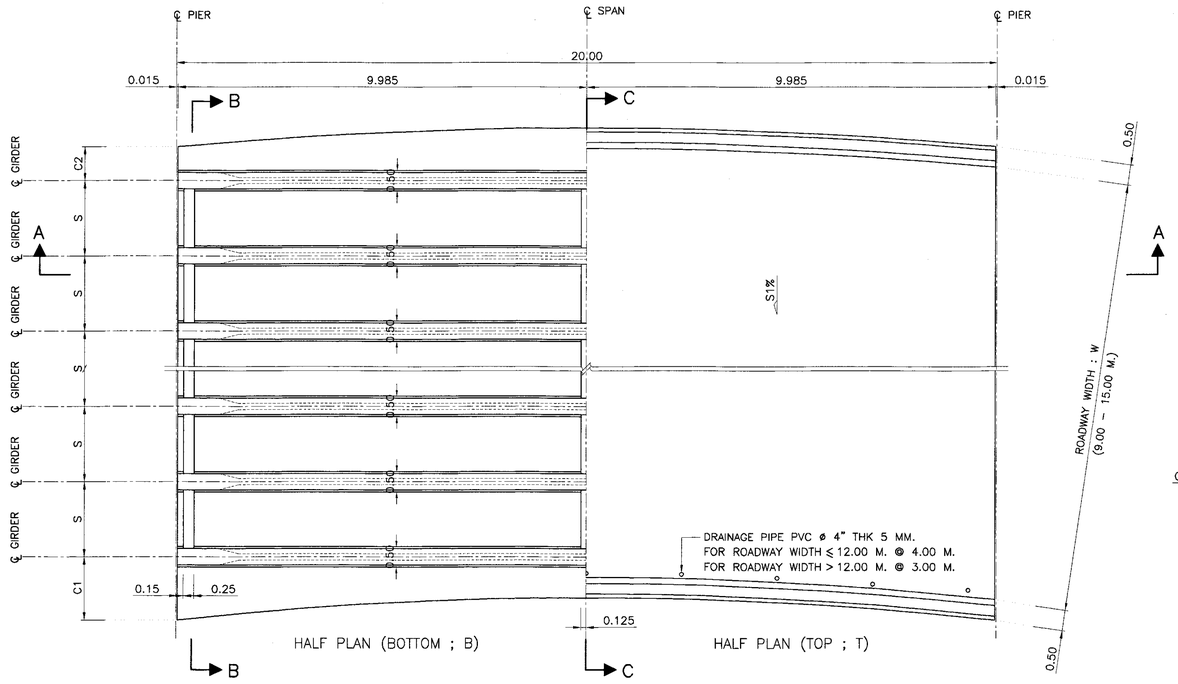

DECK PLAN FOR GIRDER SPAN LENGTH 20.00 M.
SCALE 1 : 75

TABLE OF W,S,C AND NO. OF I-GIRDER

ROADWAY WIDTH W (M.)	NO. OF I-GIRDER	SPACING S (M.)	CANTILEVER			
			C1 (M.)		C2 (M.)	
			MIN.	MAX.	MIN.	MAX.
9.00	5	2.00 (MAX.)	0.60	1.50	0.60	1.50
10.00	6	2.00 (MAX.)	0.60	1.50	0.60	1.50
11.00	6	2.00 (MAX.)	0.60	1.50	0.60	1.50
12.00	7	2.00 (MAX.)	0.60	1.50	0.60	1.50
15.00	8	2.00 (MAX.)	0.60	1.50	0.60	1.50
VARIES	n	2.00 (MAX.)	0.60	1.50	0.60	1.50

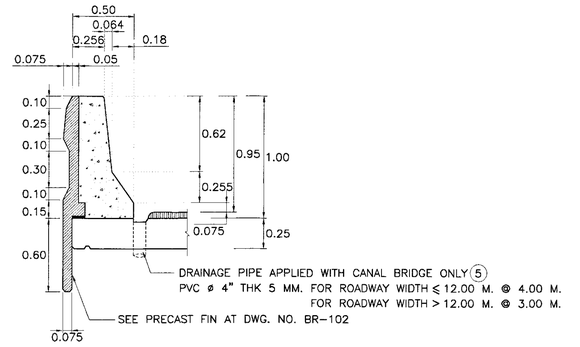

DETAIL "1"
SCALE 1 : 25

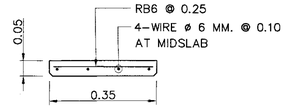

PRECAST FORM DETAIL
SCALE 1 : 10

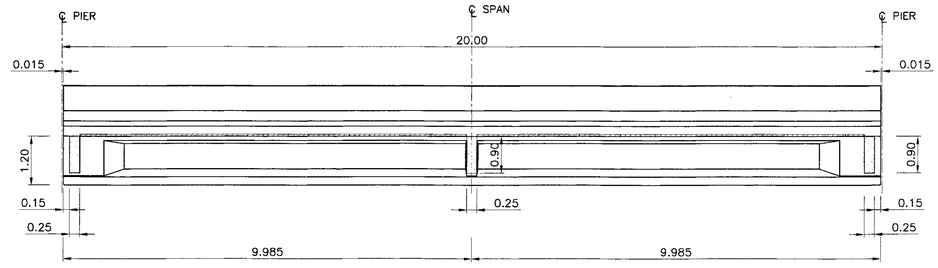

SECTION A - A
SCALE 1 : 75

NOTES :

1. ALL DIMENSIONS SHOWN ARE IN METERS UNLESS OTHERWISE INDICATED.
2. DESIGN LIVE LOAD : HL-93.
3. THIS DRAWING IS USED IN CONJUNCTION WITH DWG. NO. IG-201, IG-202 AND IG-204 TO IG-206
4. PRECAST FORM SHALL BE AS FOLLOWS:
   - 4.1 CONCRETE FOR PC. SLAB SHALL HAVE A MINIMUM ULTIMATE COMPRESSIVE STRENGTH OF 50 MPa. (510 KG/CM^2) FOR 15x15x15 CM. CUBE AT 28 DAYS, CEMENT SHALL CONFORM TO TIS. 15 TYPE I PORTLAND CEMENT OR APPROVAL TYPE.
   - 4.2 THE WEIGHT OF PRECAST FORM SHALL BE LESS THAN 120 KG/M^2
   - 4.3 ALL PRECAST FORM SHALL CARRY THE TOTAL SAFE LOAD NOT LESS THAN 750 KG/M^2(INCLUDED THE WEIGHT OF PRECAST FORM)
   - 4.4 THE WIDTH OF PRECAST FORM SHALL BE GREATER THAN 0.35 M.
   - 4.5 ENDS OF PRECAST FORM SHALL BE SEATED OVER THE SUPPORT NOT LESS THAN 7.5 CM. MOTAR WITH THE MIXED RATIO (CEMENT:SAND) OF 1:2 SHALL BE USED TO ADJUST THE ALIGNMENT OF THE PRECAST AND TO SMOOTHEN
   - 4.6 CONCRETE PROPERTIES SHALL BE CONFORMED TO THE SPECIFICATION OF PRESTRESSED CONCRETE GIRDERS AND ALL PRESTRESSING STRANDS SHALL BE CONFORMED TO TIS.420 OR TIS 95.
   - 4.7 PRECAST FORM SHALL NOT BEND OR DEFLECT. THE TOLERANCE OF ALL DIMENSIONS OF PRECAST FORM SHALL BE WITHIN THE ACCEPTABLE LIMITS.
   - 4.8 PRIOR TO CONSTRUCTION, THE CONTRACTOR SHALL PREPARE THE SHOP DRAWINGS OF PRECAST FORM INCLUDING ALL CALCULATION AND SUPPORTED DOCUMENTS. THE DOCUMENTS SHALL BE CERTIFIED BY ENGINEERS AS THE REQUIREMENTS OF COUNCIL OF ENGINEERS AND SUBMITTED TO THE DESIGNERS FOR APPROVED.
   - 4.9 THE BOTTOM SURFACE OF PRECAST FORM SHALL BE SMOOTHENED.
5. FOR SINGLE CROSS SLOPE, DRAINAGE PIPES SHALL BE AT LOWER SLOPE SIDE AND REDUCED THE SPACING HALF

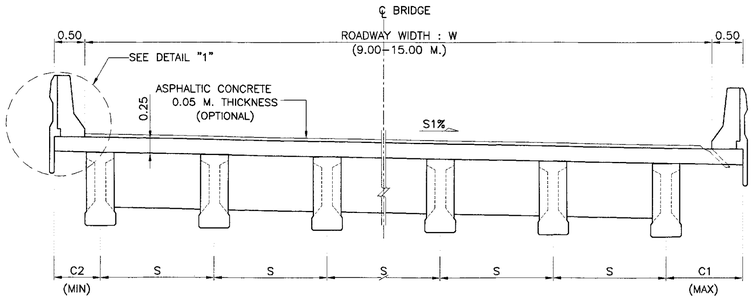

SECTION B - B
SCALE 1 : 50

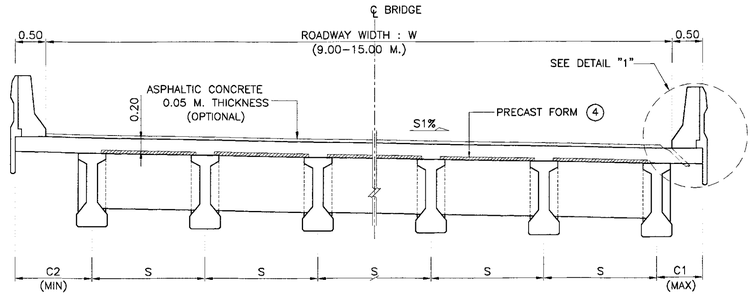

SECTION C - C
SCALE 1 : 50

KINGDOM OF THAILAND

MINISTRY OF TRANSPORT
DEPARTMENT OF HIGHWAYS

STANDARD DRAWING

0°-45° SKEW I-GIRDER 20.00 M. SPAN (FULL JOINT)
BRIDGE DECK DIMENSION (FOR CURVE)

DESIGNED : D.O.H. & CONSULTANTS	**CHECKED :** BUREAU OF LOCATION & DESIGN		**DATE :** OCT 2015
	SUBMITTED : (DIRECTOR OF LOCATION & DESIGN BUREAU)		**SCALE :** AS SHOWN
REV.1 REVISION 1/2017		JUN 2017	**DWG NO.** IG-203
	APPROVED : (FOR DIRECTOR GENERAL)		**SHEET NO.** 221/R1
REV. REVISION	SIGNATURE	DATE	

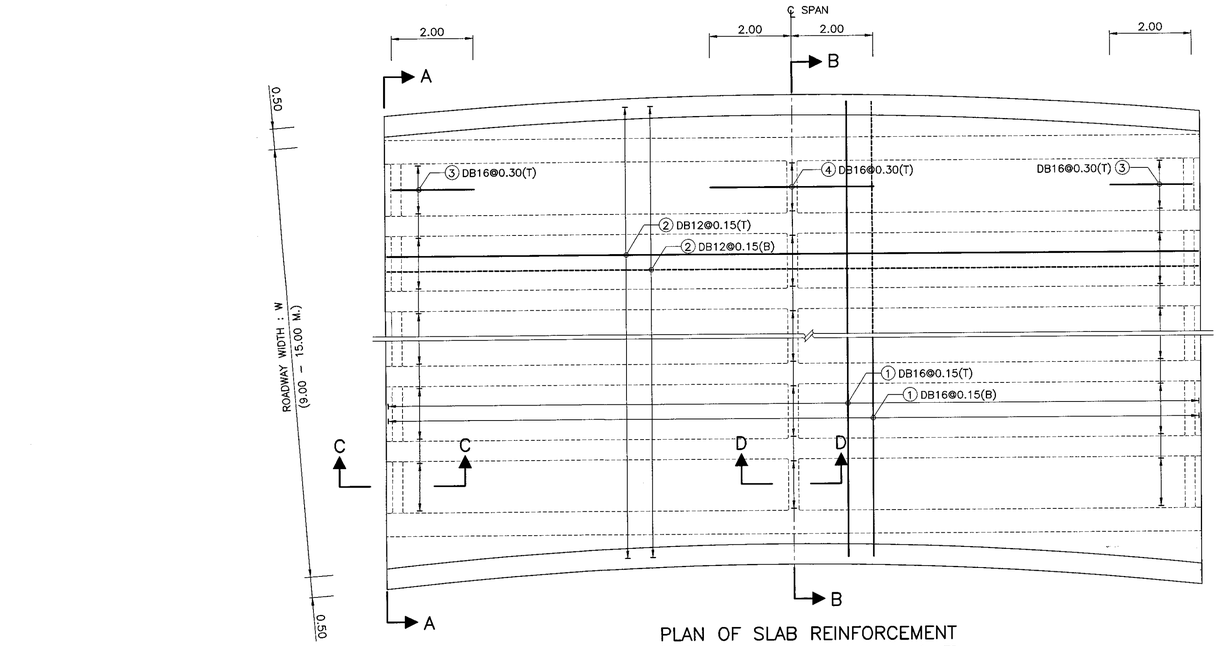

PLAN OF SLAB REINFORCEMENT
SCALE 1 : 75

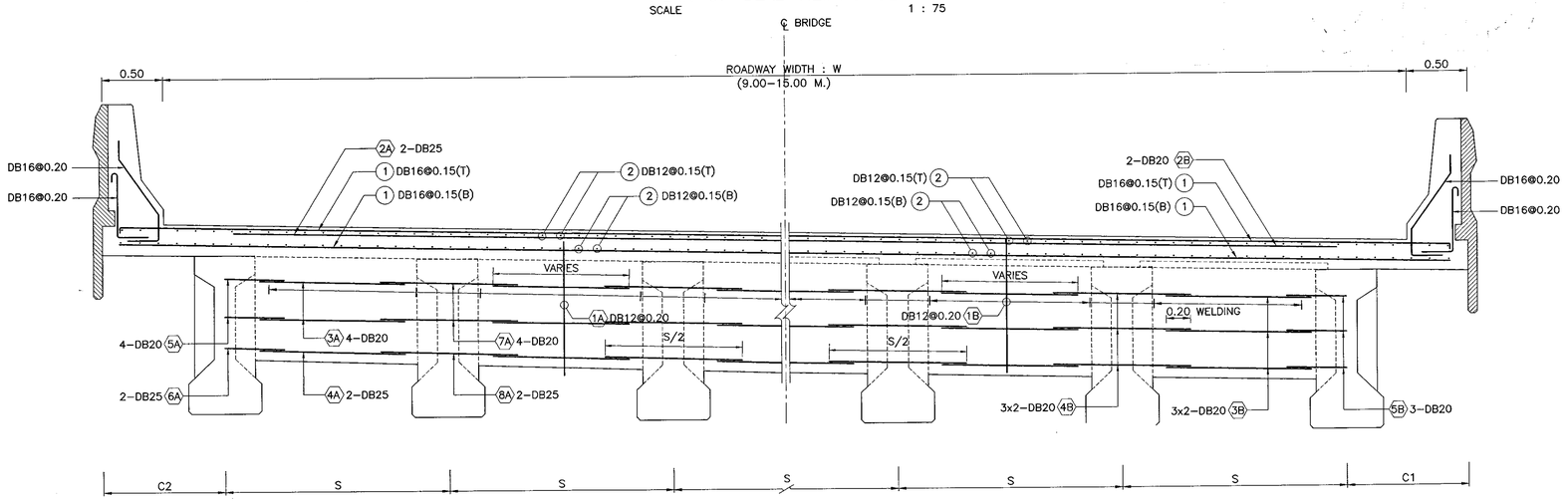

HALF SECTION A – A

HALF SECTION B – B

CROSS SECTION OF REINFORCEMENT SLAB AND DIAPHRAGM
SCALE 1 : 75

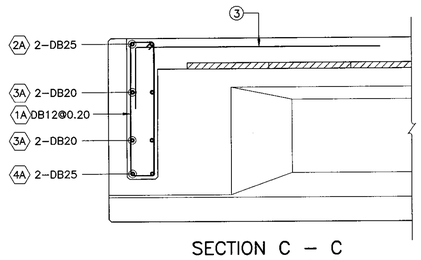

SECTION C – C
SCALE 1 : 25

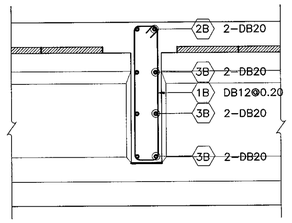

SECTION D – D
SCALE 1 : 25

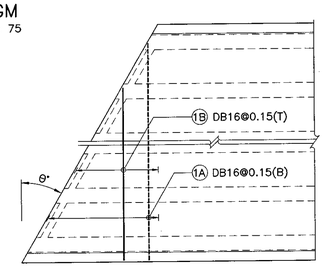

SHOW TRANSVERSE ONLY SIMILARY NOT SKEW
(LONGITUDINAL SIMILARY TO NO SKEW)

VARIES (1A) VARIES (1B)

SKEW REINFORCEMENT DETAIL
SCALE 1 : 25

TABLE OF REINFORCEMENT (EXTERIOR DIAPHRAGM)

BAR NO.	BAR SIZE	SHAPE
1A	DB12	0.19, 1.09, 1A
2A	DB25	W+1.00–2C, 2A
3A	DB20	S/2+0.40, 3A
4A	DB25	S/2+0.40, 4A
5A	DB20	S/4+0.10, 0.19, 5A
6A	DB25	S/4+0.10, 6A
7A	DB20	S/2
8A	DB25	7A , 8A

TABLE OF REINFORCEMENT (INTERIOR DIAPHRAGM)

BAR NO.	BAR SIZE	SHAPE
1B	DB12	0.19, 1.09, 1B
2B	DB20	W+1.00–2C, 2B
3B	DB20	S/2+0.40, 3B
4B	DB20	S/4+0.10, 0.19, 5B
5B	DB20	S/2, 4B

TABLE OF REINFORCEMENT (SLAB)

BAR NO.	BAR SIZE	SHAPE
1	DB16	W+0.70, 1
2	DB12	19.91, 2
3	DB16	2.00, 0.50, 3
4	DB16	4.00, 4

NOTE :

1. ALL DIMENSIONS SHOWN ARE IN METERS UNLESS OTHERWISE INDICATED.
2. DESIGN LIVE LOAD : HL–93.
3. CONCRETE FOR DECK SLAB SHALL HAVE A MINIMUM ULTIMATE COMPRESSIVE STRENGTH OF 35 MPa. (357 KG/CM^2) FOR 15x15x15 CM. CUBE AT 28 DAYS, CEMENT SHALL CONFORM TO TIS. 15 TYPE I PORTLAND CEMENT OR APPROVAL TYPE.
4. REINFORCING STEEL SHALL CONFORM TO TIS. 20 GRADE SR 24 FOR ROUND BARS AND TIS. 24 GRADE SD 40 FOR DEFORMED BARS.
5. THE REINFORCING STEEL NO.5A, 6A, 7A, 8A, 4B AND 5B SHALL BE EMBEDED AT STAGE OF GIRDER CASTING FROM FACTORY
6. THIS DRAWING IS USED IN CONJUNCTION WITH DWG NO.IG–201 TO IG–203, IG–205 AND IG–206

REF.	REVISION	SIGNATURE	DATE

KINGDOM OF THAILAND

MINISTRY OF TRANSPORT
DEPARTMENT OF HIGHWAYS

STANDARD DRAWING

0°–45° SKEW I–GIRDER 20.00 M. SPAN (FULL JOINT)
BRIDGE DECK REINFORCEMENT (FOR CURVE)

DESIGNED : D.O.H. & CONSULTANTS	CHECKED : BUREAU OF LOCATION & DESIGN	DATE : OCT 2015
SUBMITTED : (DIRECTOR OF LOCATION & DESIGN BUREAU)		SCALE : AS SHOWN
APPROVED : (FOR DIRECTOR GENERAL)		DWG NO. IG–204
		SHEET NO. 222

D:\std dwg 2015\IG-204(REV00)

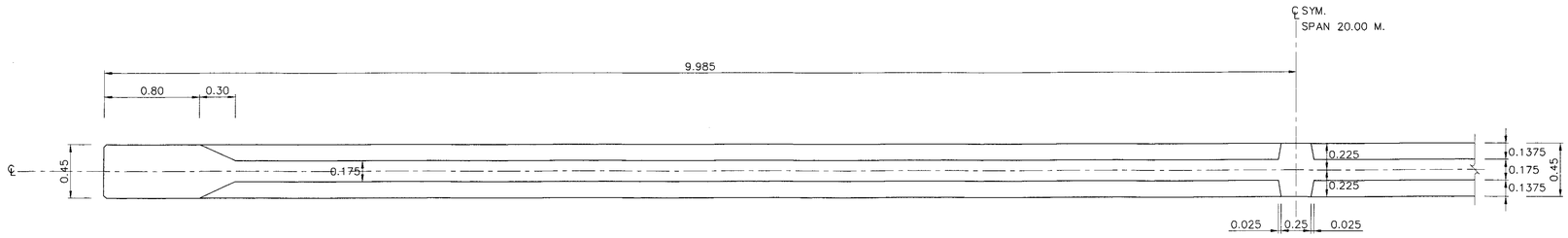

SECTION A – A
SCALE 1 : 25

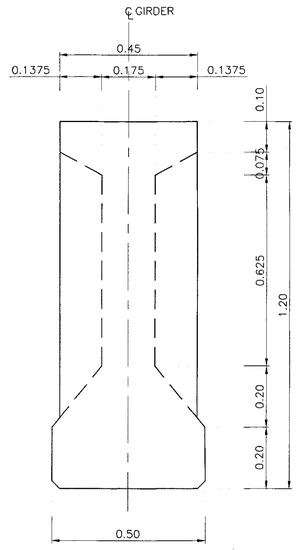

SECTION C – C
SCALE 1 : 10

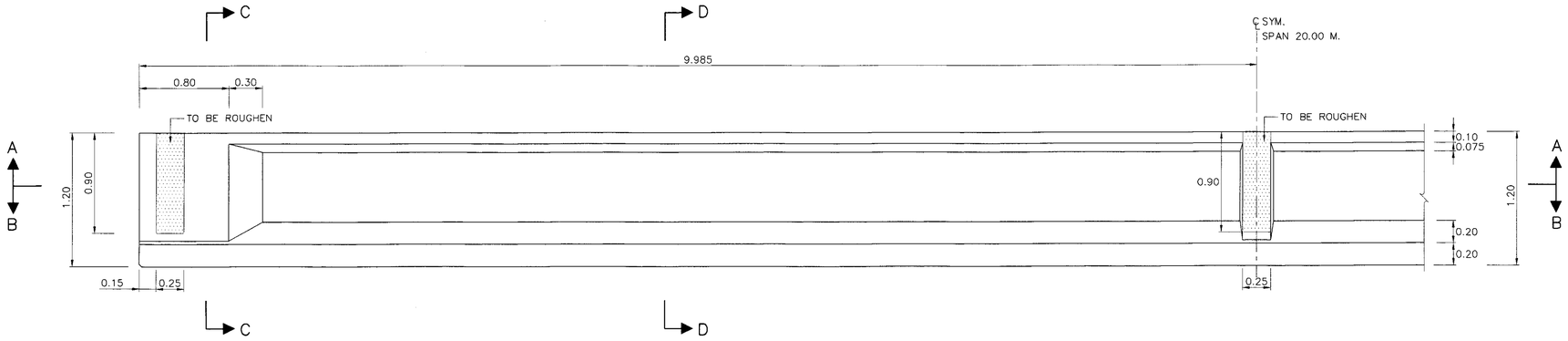

ELEVATION OF GIRDER SPAN LENGTH 20.00 M.
SCALE 1 : 25

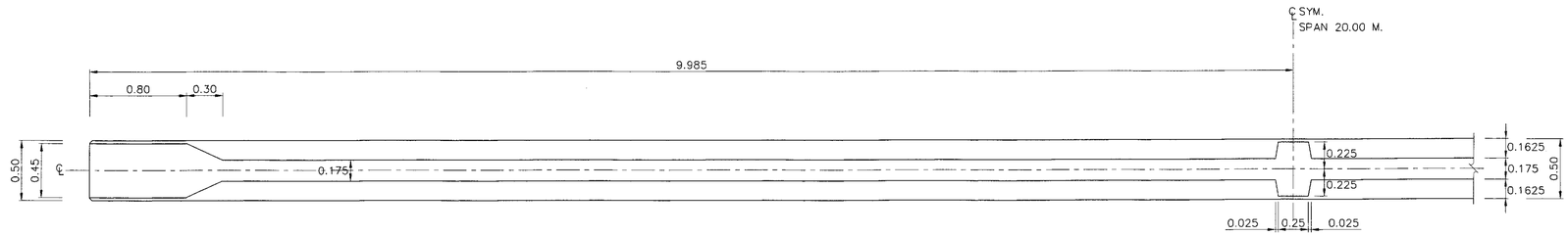

SECTION B – B
SCALE 1 : 25

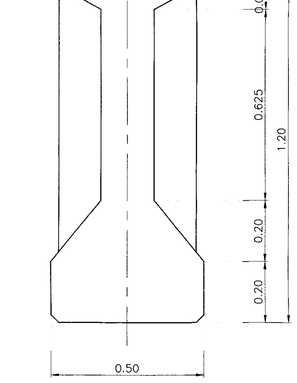

SECTION D – D
SCALE 1 : 10

NOTES :

1. ALL DIMENSIONS SHOWN ARE IN METERS UNLESS OTHERWISE INDICATED.
2. DESIGN LIVE LOAD : HL–93.
3. CONCRETE FOR PRECAST I–GIRDER SHALL HAVE A MINIMUM ULTIMATE COMPRESSIVE STRENGTH OF 50 MPa. (510 KG/CM^2) FOR 15x15x15 CM. CUBE AT 28 DAYS, CEMENT SHALL CONFORM TO TIS. 15 TYPE I PORTLAND CEMENT OR APPROVAL TYPE.
4. THIS DRAWING IS USED IN CONJUNCTION WITH DWG. NO. IG–201 TO IG–204 AND IG–206

REV.	REVISION	SIGNATURE	DATE
REV.1	REVISION 1/2017		JUN 2017

KINGDOM OF THAILAND

MINISTRY OF TRANSPORT
DEPARTMENT OF HIGHWAYS

STANDARD DRAWING

0°–45° SKEW I–GIRDER 20.00 M. SPAN (FULL JOINT)

GIRDER DIMENSION

DESIGNED : D.O.H. & CONSULTANTS	**CHECKED :** BUREAU OF LOCATION & DESIGN	**DATE :** OCT 2015
SUBMITTED : (DIRECTOR OF LOCATION & DESIGN BUREAU)		**SCALE :** AS SHOWN
APPROVED : (FOR DIRECTOR GENERAL)		**DWG NO.** IG–205
		SHEET NO. 223/RI

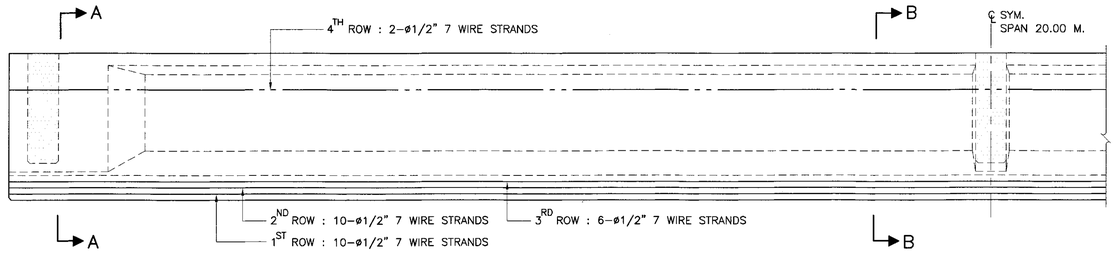

PRESTRESSING DETAIL
SCALE 1 : 25

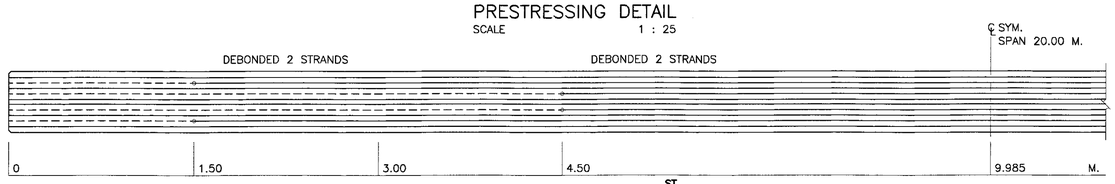

POSITION OF DEBONDED 1ST ROW
SCALE 1 : 25

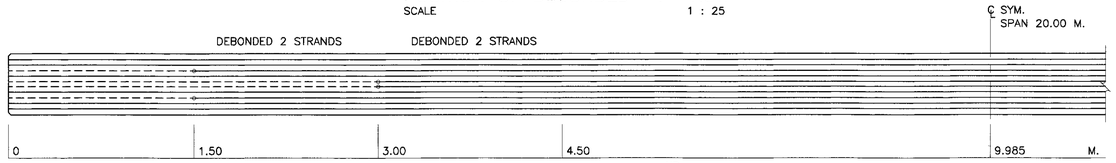

POSITION OF DEBONDED 2ND ROW
SCALE 1 : 25

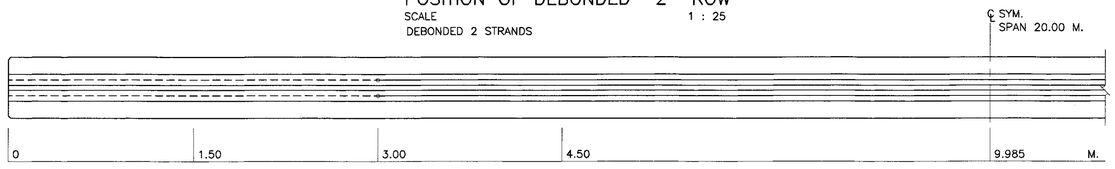

POSITION OF DEBONDED 3RD ROW
SCALE 1 : 25

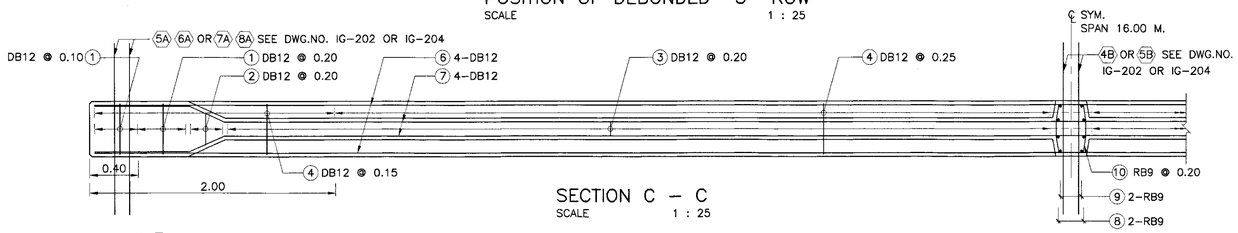

SECTION C – C
SCALE 1 : 25

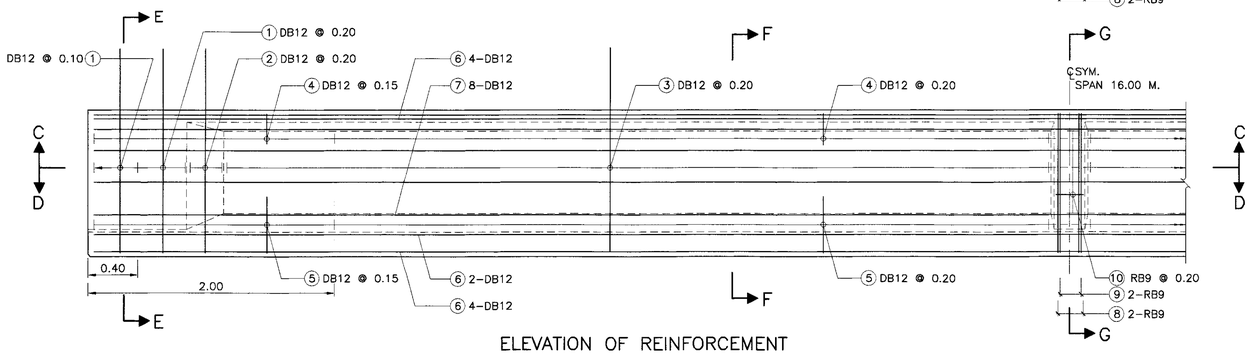

ELEVATION OF REINFORCEMENT
SCALE 1 : 25

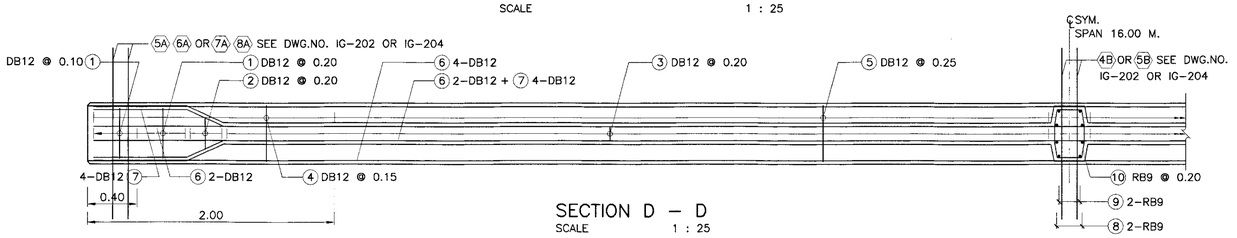

SECTION D – D
SCALE 1 : 25

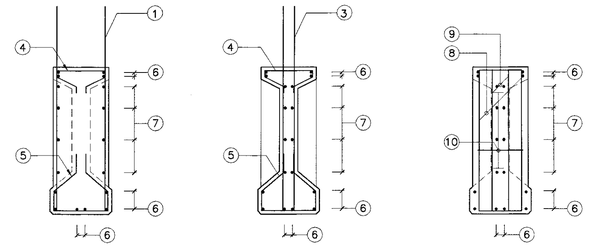

SECTION E – E
SCALE 1 : 25

SECTION F – F
SCALE 1 : 25

SECTION G – G
SCALE 1 : 25

TABLE OF GIRDER REINFORCEMENT

BAR NO.	BAR SIZE	SHAPE
1	DB12	
2	DB12	
3	DB12	
4	DB12	
5	DB12	
6	DB12	
7	DB12	
8	RB9	
9	RB9	
10	RB9	

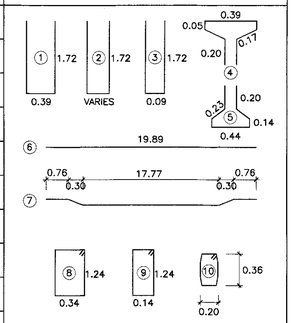

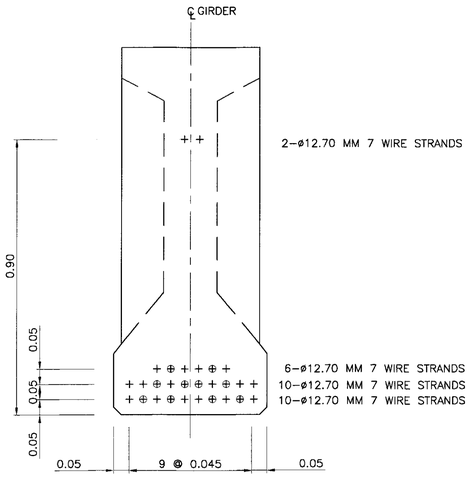

SECTION A – A
SCALE 1 : 10

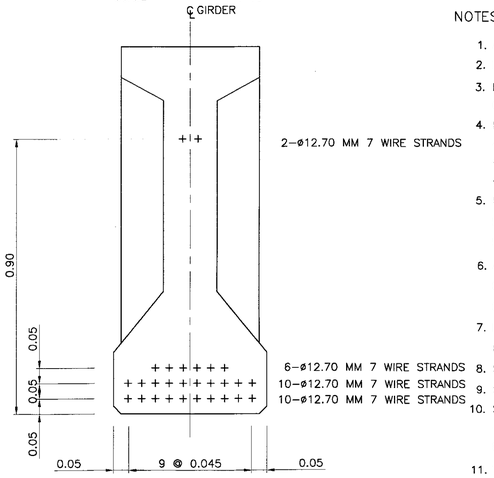

SECTION B – B
SCALE 1 : 10

SYMBOL AND DISTANCE OF DEBOND

+ —— BOND STRAND
⊕ – – – DEBOND STRAND FROM ENDS OF GIRDER

18 – STRANDS	
10 – STRANDS	
28 – STRANDS	

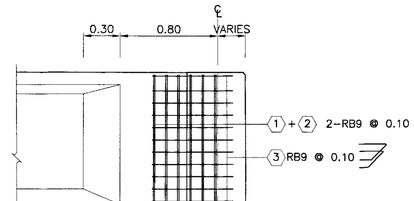

SECTION H – H
SCALE 1 : 25

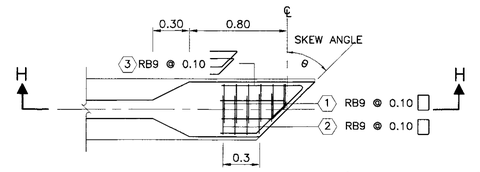

EXTRA REINFORCEMENT AT THE END (SKEW GIRDER)
SCALE 1 : 25

NOTES :

1. ALL DIMENSIONS SHOWN ARE IN METERS UNLESS OTHERWISE INDICATED.
2. DESIGN LIVE LOAD : HL-93.
3. MIX. DESIGN OF CONCRETE FOR PRESTRESSED I-GIRDER BEAM HAVE A MINIMUM ULTIMATE COMPRESSIVE STRENGTH OF 50 MPa. (510 KG/CM^2) FOR CUBE STRENGTH AT 28 DAYS.
4. PRESTRESSING :
   4.1 LOW RELAXATION SEVEN WIRE STRANDS ø 12.7 MM. IN ACCORDANCE WITH TIS 420
   4.2 MIN CHARACTERISTIC STRENGTH OF STRAND 180 KN.
   4.3 INITIAL PRESTRESS SHALL BE 75% OF CHARACTERISTIC STRENGTH.
5. POSITION OF DEBONDED SHALL BE SPECIFIED IN THIS DRAWING AS FOLLOW:
   5.1 POINT OF DEBONDED MEANS STARTING POINT TO END OF GIRDER
   5.2 DEBONED MEANS PERFORMING FOR NO CONTACT BETWEEN STRAND AND CONCRETE.
6. AFTER THE COMPRESSIVE STRENGTH OF CONCRETE OF THE BRIDGE GIRDER GAINS THE MINIMUM COMPRESSIVE STRENGTH TESTED BY USING THE CONCRETE CUBE 15x15x15 CM. OF 40 MPa. (408 KG/CM^2), THE JACKING FORCES SHALL BE APPLIED.
7. LIFTING METHOD SHALL BE LIFTING UP AT BOTH END OF GIRDER. DO NOT LIFT UP AT THE MIDDLE OF GIRDER.
8. SPACING OF GIRDERS SHALL BE LESS THAN 2.00 M.
9. SKEW ANGLE SHALL BE LESS THAN 45 DEGREE.
10. SYMBOLS OF PRESTRESSING STRANDS
    + —— BOND PRESTESSING STRANDS (ø12.7 MM-7 WIRE STRANDS)
    ⊕ – – – – DEBOND PRESTESSING STRANDS (ø12.7 MM-7 WIRE STRANDS)
11. THIS DRAWING IS USED IN CONJUNCTION WITH DWG. NO. IG-201 TO IG-205

KINGDOM OF THAILAND

MINISTRY OF TRANSPORT
DEPARTMENT OF HIGHWAYS

STANDARD DRAWING

0°-45° SKEW I-GIRDER 20.00 M. SPAN (FULL JOINT)

GIRDER PRESTRESSING & REINFORCEMENT

DESIGNED : D.O.H. & CONSULTANTS	**CHECKED :** BUREAU OF LOCATION & DESIGN		**DATE :** OCT 2015
SUBMITTED : (DIRECTOR OF LOCATION & DESIGN BUREAU)			**SCALE :** AS SHOWN
APPROVED : (FOR DIRECTOR GENERAL)			**DWG NO.** IG-206
			SHEET NO. 224/RI

REV.	REVISION	SIGNATURE	DATE
REV.1	REVISION 1/2017		JUN 2017

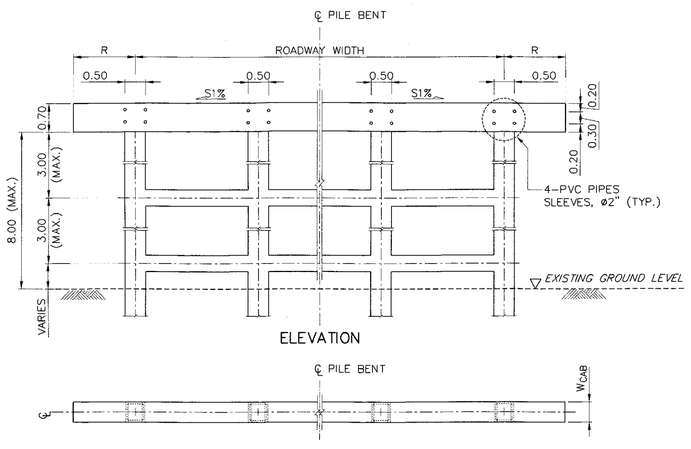

ELEVATION

PLAN

PROVIDING MAINTENANCE AT PILE BENT DETAIL
SCALE 1 : 75

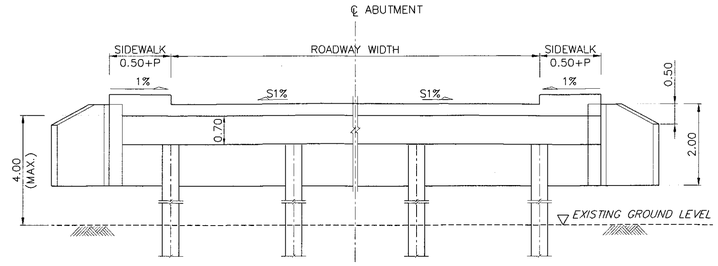

ABUTMENT ELEVATION

TABLE OF CAPBEAM WIDTH (W_{CAB})							
CAPBEAM WIDTH (W_{CAB})	CENTER TO CENTER SPAN (M.)						
	5.00	6.00	7.00	8.00	9.00	10.00	12.00
0° ? SKEW ? 25°	0.50	0.50	0.50	0.50	0.50	0.50	0.50
25° < SKEW ? 45°	0.55	0.55	0.55	0.60	0.60	0.60	0.60

LENGTH OF WINGWALL	
L1 = 1.414 SEC (45°−θ/2)	L3 = 1.414 SEC (45°+θ/2)
L2 = 0.500 SEC (45°−θ/2)	L4 = 0.500 SEC (45°+θ/2)

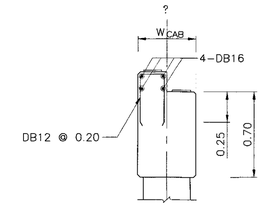

DETAIL "A"
SCALE 1 : 25

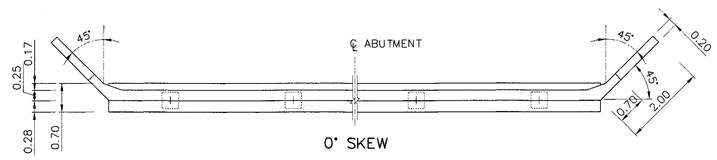

0° SKEW

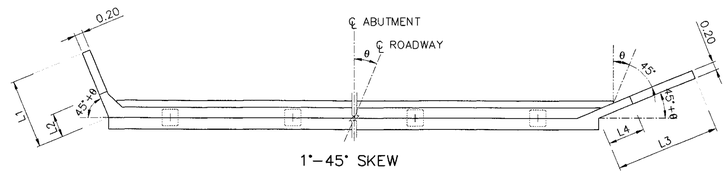

1°−45° SKEW

ABUTMENT PLAN
SCALE 1 : 75

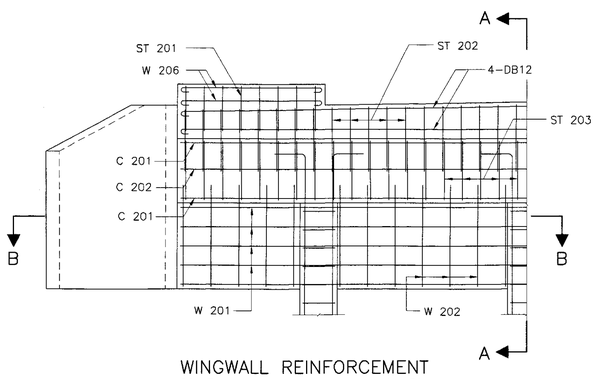

WINGWALL REINFORCEMENT
SCALE 1 : 50

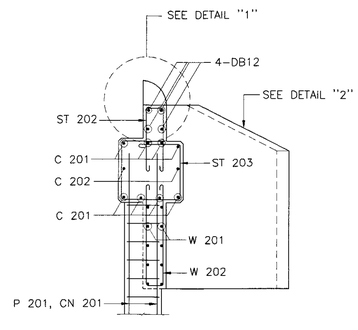

SECTION A − A
SCALE 1 : 50

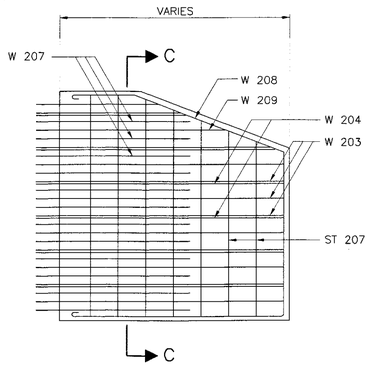

DETAIL "2"
SCALE 1 : 50

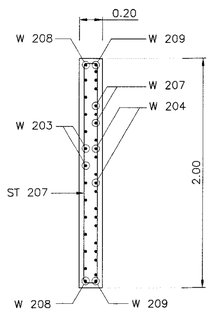

SECTION C − C
SCALE 1 : 50

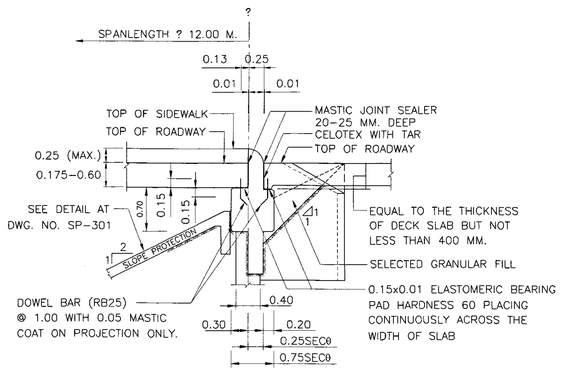

ABUTMENT HEAD DETAILS (SECTION 2 − 2)
SCALE 1 : 50

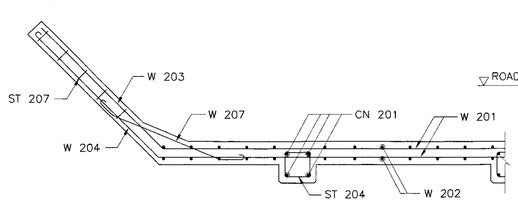

SECTION B − B
SCALE 1 : 50

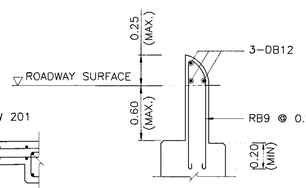

DETAIL "1"
SCALE 1 : 50

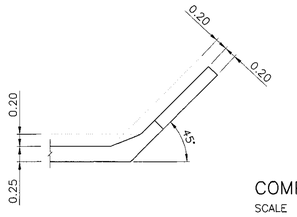

WINGWALL DETAILS
SCALE 1 : 50

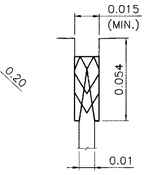

COMPRESSION SEAL
SCALE 1 : 2

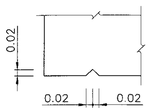

TYPICAL WATER DRIP DETAIL
SCALE TO SCALE

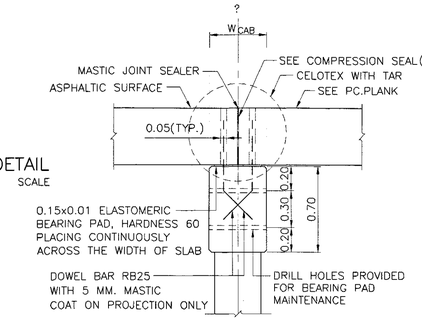

SAME SPAN

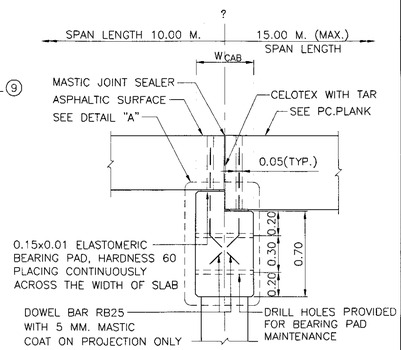

DIFF. SPAN

CAP BEAM DETAIL (SECTION 1 − 1)
SCALE 1 : 25

TABLE OF REINFORCEMENT									
BAR BENDING DIAGRAMS	No.	BAR MARK	SPAN 5.00 M. REINF.	SPAN 6.00 M. REINF.	SPAN 7.00 M. REINF.	SPAN 8.00 M. REINF.	SPAN 9.00 M. REINF.	SPAN 10.00 M. REINF.	SPAN 12.00 M. REINF.
	①	ST 207	RB9 @ 0.30	RB9 @ 0.30	RB9 @ 0.30	RB9 @ 0.30	RB9 @ 0.30	RB9 @ 0.30	RB9 @ 0.30
	②	W 201	DB12 @ 0.20	DB12 @ 0.20	DB12 @ 0.20	DB12 @ 0.20	DB12 @ 0.20	DB12 @ 0.20	DB12 @ 0.20
	③	W 202	RB6 @ 0.30	RB6 @ 0.30	RB6 @ 0.30	RB6 @ 0.30	RB6 @ 0.30	RB6 @ 0.30	RB6 @ 0.30
	④	W 203	DB12 @ 0.15	DB12 @ 0.15	DB12 @ 0.15	DB12 @ 0.15	DB12 @ 0.15	DB12 @ 0.15	DB12 @ 0.15
	⑤	W 204	RB9 @ 0.30	RB9 @ 0.30	RB9 @ 0.30	RB9 @ 0.30	RB9 @ 0.30	RB9 @ 0.30	RB9 @ 0.30
	⑥	W 207	DB12 @ 0.15	DB12 @ 0.15	DB12 @ 0.15	DB12 @ 0.15	DB12 @ 0.15	DB12 @ 0.15	DB12 @ 0.15
	⑦	W 208	2−DB12	2−DB12	2−DB12	2−DB12	2−DB12	2−DB12	2−DB12
	⑧	W 209	2−RB9	2−RB9	2−RB9	2−RB9	2−RB9	2−RB9	2−RB9
REMARK									

NOTES :

1. ALL DIMENSIONS SHOWN ARE IN METERS UNLESS OTHERWISE INDICATED
2. DESIGN LIVE LOAD : HL−93
3. A MINIMUM ULTIMATE COMPRESSIVE STRENGTH FOR A 150x150x150 MM. CUBE AT 28 DAYS FOR WINGWALL 35 MPa. (357 KG/CM^2)
4. REBAR SIZES SMALLER THAN 12 MM. SHALL BE TIS 20 GRADE SR 24 PLAIN ROUND BARS, OTHERS SHALL BE TIS 24 GRADE SD 40 DEFORMED BARS UNLESS OTHERWISE INDICATED.
5. CLEAR CONCRETE COVER SHALL BE 50 MM. EXCEPT FOR BACK WALL AND WINGWALLS WHERE A CLEAR COVER OF 25 MM. SHALL BE PROVIDED.
6. LIMITATION OF BACKFILL SHOULD NOT EXCEED 4.00 M. IF BACKFILL EXCEED 4.00 M., ABUTMENT DETAILS AS DWG NO. PB−309 OR PB−310 SHALL BE USED.
7. R = 0.50 M. FOR THE BRIDGE WITHOUT SIDEWALK (P = 0.00). FOR THE BRIDGE WITH SIDEWALK OF P = 0.50 AND 1.00, R = 0.50 M. AND 1.00 M., RESPECTIVELY.
8. THIS DRAWING IS COMPLEMENTARY WITH DWG. NO. PB−202 TO PB−221, PB−301 TO PB−310
9. COMPRESSION SEAL SHALL BE REPLACED BY MASTIC JOINT SEALER WHEN PAVE THE ROAD SURFACE WITH ASPHALT

REV.	REVISION	SIGNATURE	DATE
REV.1	REVISION 1/2017		JUN 2017

KINGDOM OF THAILAND

MINISTRY OF TRANSPORT

DEPARTMENT OF HIGHWAYS

STANDARD DRAWING

CAP BEAM AND WINGWALL OF ABUTMENT
DIMENSION AND REINFORCEMENT DETAILS

DESIGNED : D.O.H. & CONSULTANTS	**CHECKED :** BUREAU OF LOCATION & DESIGN	**DATE :** OCT 2015
SUBMITTED : (DIRECTOR OF LOCATION & DESIGN BUREAU)		**SCALE :** AS SHOWN
APPROVED : (FOR DIRECTOR GENERAL)		**DWG NO.** PB−101
		SHEET NO. 225/R1

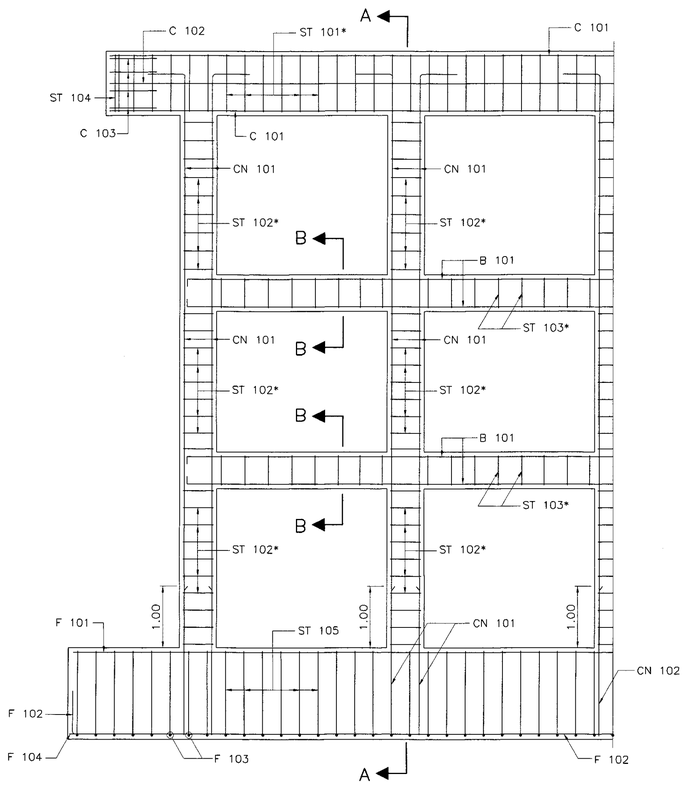

PIER REINFORCEMENT DETAILS
SCALE 1 : 50

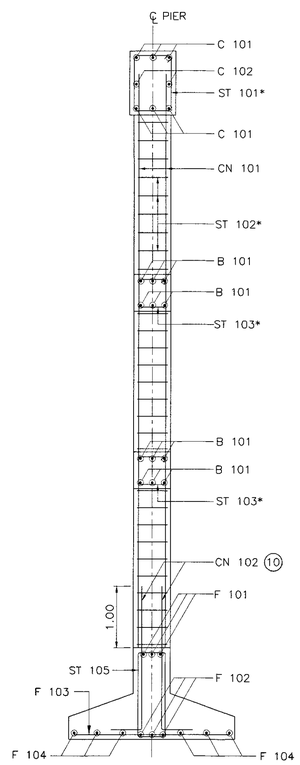

SECTION A – A
SCALE 1 : 50

TABLE OF REINFORCEMENT								
BAR BENDING DIAGRAMS	No.	BAR MARK	SPAN 5.00 M. REINF.	SPAN 6.00 M. REINF.	SPAN 7.00 M. REINF.	SPAN 8.00 M. REINF.	SPAN 9.00 M. REINF.	SPAN 10.00 M. REINF.	SPAN 12.00 M. REINF.
	①	C 101	6–DB25	6–DB25	6–DB25	6–DB25	6–DB25	6–DB25	6–DB25
	②	C 102	2–DB12	2–DB12	2–DB12	2–DB12	2–DB12	2–DB12	2–DB12
	③	C 103	4–DB12	4–DB12	4–DB12	4–DB12	4–DB12	4–DB12	4–DB12
	④+	CN 101 (LEVEL 1)	4–DB25	4–DB25	4–DB25	4–DB25	4–DB25	4–DB25	4–DB25
		CN 101 (LEVEL 2)	8–DB25	8–DB25	8–DB25	8–DB25	8–DB25	8–DB25	8–DB25
	⑤+	CN 102	4–DB25	4–DB25	4–DB25	4–DB25	4–DB25	4–DB25	4–DB25
	⑥	ST 101	RB9 @ 0.20	RB9 @ 0.20	RB9 @ 0.20	RB9 @ 0.20	RB9 @ 0.20	RB9 @ 0.20	RB9 @ 0.20
	⑦	ST 102	RB9 @ 0.20	RB9 @ 0.20	RB9 @ 0.20	RB9 @ 0.20	RB9 @ 0.20	RB9 @ 0.20	RB9 @ 0.20
	⑧	ST 103	DB12 @ 0.20	DB12 @ 0.20	DB12 @ 0.20	DB12 @ 0.20	DB12 @ 0.20	DB12 @ 0.20	DB12 @ 0.20
	⑨	ST 104	2–RB9	2–RB9	2–RB9	2–RB9	2–RB9	2–RB9	2–RB9
	⑩	ST 105	RB9 @ 0.20	RB9 @ 0.20	RB9 @ 0.20	RB9 @ 0.20	RB9 @ 0.20	RB9 @ 0.20	RB9 @ 0.20
	⑪	B 101	6–DB25	6–DB25	6–DB25	6–DB25	6–DB25	6–DB25	6–DB25
	⑫	F 101	3–DB25	3–DB25	3–DB25	3–DB25	3–DB25	3–DB25	3–DB25
	⑬	F 102	3–DB25	3–DB25	3–DB25	3–DB25	3–DB25	3–DB25	3–DB25
	⑭	F 103	DB25 @ 0.25	DB25 @ 0.25	DB25 @ 0.25	DB25 @ 0.25	DB25 @ 0.25	DB25 @ 0.25	DB25 @ 0.25
	⑮	F 104	6–DB25	6–DB25	6–DB25	6–DB25	6–DB25	6–DB25	6–DB25

REMARK : ④+,⑤+ = REINFORCEMENT NUMBERS OF CN 101 AND CN 102 ARE SHOWN PER COLUMN RELEVANT TO SEISMIC LEVEL 1 (1A OR 1B) AND 2

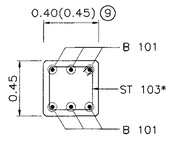

SECTION B – B
SCALE 1 : 25

NOTES :

1. ALL DIMENSIONS SHOWN ARE IN METERS UNLESS OTHERWISE INDICATED.
2. DESIGN LIVE LOAD : HL–93
3. A MINIMUM ULTIMATE COMPRESSIVE STRENGTH FOR A 150x150x150 MM. CUBE AT 28 DAYS AS FOLLOWS:
   A) FOR PILE BENT/CAP BEAM 35 MPa. (357 KG/CM^2)
   B) FOR FOOTING 35 MPa. (357 KG/CM^2)
   C) FOR SIDEWALK AND BARRIER 35 MPa. (357 KG/CM^2)
4. REBAR SIZES SMALLER THAN 12 MM. SHALL BE TIS 20 GRADE SR 24 PLAIN ROUND BARS, OTHERS SHALL BE TIS 24 GRADE SD 40 DEFORMED BARS UNLESS OTHERWISE INDICATED.
5. EACH SPREAD FOOTING SHALL BE LOCATED BELOW TO A DEPTH WHERE SCOUR WILL NOT AFFECT CAPACITY, THE MINIMUM ALLOWABLE BEARING CAPACITY OF 0.20 MPa (20 TON/M^2)
6. HORIZONTAL CROSS BRACING BETWEEN COLUMNS OF PILE BENT SHALL BE PROVIDED AS FOLLOWS:
   A) IF THE DISTANCE FROM EXISTING GROUND LEVEL TO THE BOTTOM OF THE CAP BEAM EXCEED 3.00 M., A BRACING SHALL BE PLACED IN SUCH A WAY THAT THE DISTANCE FROM THE BOTTOM OF THE CAP BEAM TO THE CENTERLINE OF THE BRACING IS NOT MORE THAN 3.00 M.
   B) IF THE DISTANCE BETWEEN THE CENTERLINE OF THE BRACING TO THE EXISTING GROUND LEVEL EXCEED 3.00 M., ADDITIONAL BRACINGS SHALL BE PROVIDED AT AN INTERVAL NOT MORE THAN 3.00 M.
7. *ADJUST SPACING OF STEEL REINFORCEMENT IN TABLE BY @ 0.10 (TYP.) TO RESIST EARTHQUAKE FORCE. (IN CASE OF BRIDGE LOCATED IN SEISMIC LEVEL 1B AND 2)
8. R = 0.50 M. FOR THE BRIDGE WITHOUT SIDEWALK (P = 0.00). FOR THE BRIDGE WITH SIDEWALK OF P = 0.50 AND 1.00, R = 0.50 M. AND 1.00 M., RESPECTIVELY.

(9) USING 0.45 WHEN PILE BENT AND BEAM ARE IN SALTWATER

(10) LAP SPLICE OF MAIN REINFORCING BAR IS NOT PERMITTED FOR SEISMIC LEVEL 1B AND 2

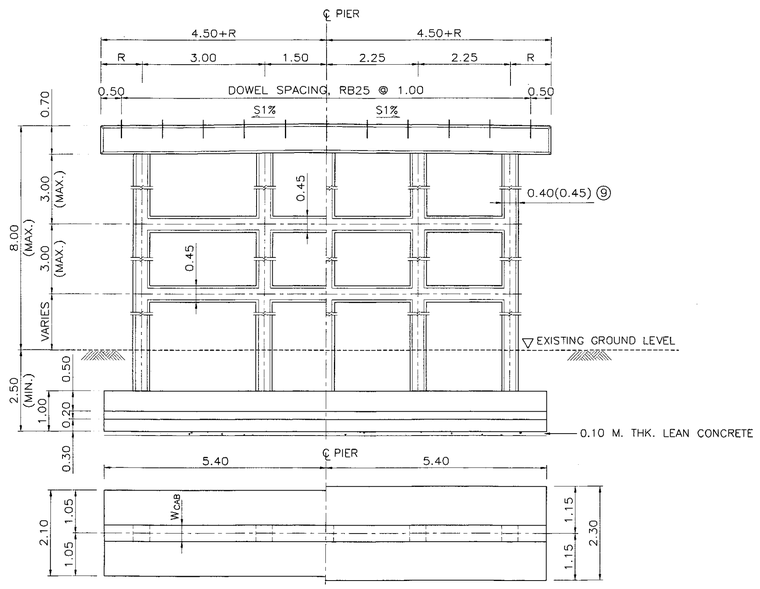

(5.00–6.00 M. SPAN) (7.00–8.00 M. SPAN)

PIER DETAILS (HALF ELEV. & PLAN)
SCALE 1 : 75

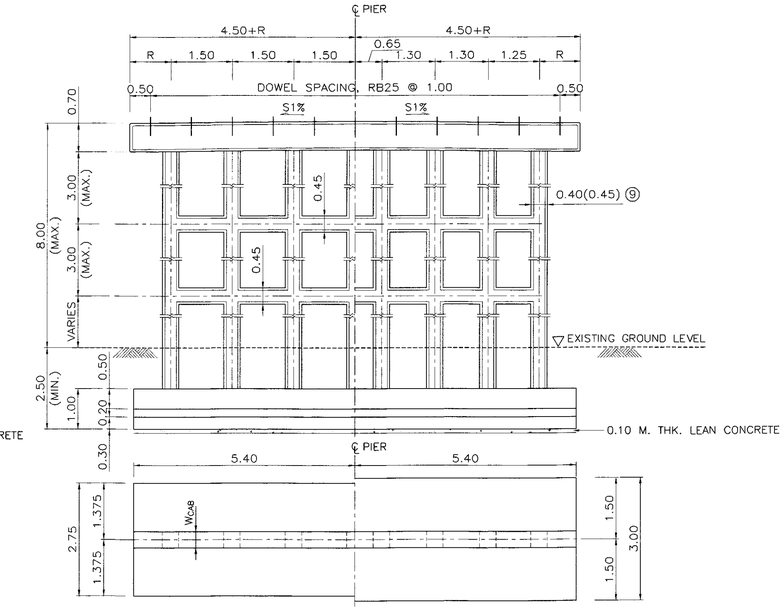

(9.00–10.00 M. SPAN) (12.00 M. SPAN)

PIER DETAILS (HALF ELEV. & PLAN)
SCALE 1 : 75

REV.1	REVISION 1/2017		JUN 2017
REV.	REVISION	SIGNATURE	DATE

KINGDOM OF THAILAND

MINISTRY OF TRANSPORT
DEPARTMENT OF HIGHWAYS

STANDARD DRAWING

9.00 M. ROADWAY WIDTH SLAB BRIDGE, 0° SKEW
SPREAD FOOTING PIER DETAIL

DESIGNED : D.O.H. & CONSULTANTS	**CHECKED :** BUREAU OF LOCATION & DESIGN	**DATE :** OCT 2015
SUBMITTED : (DIRECTOR OF LOCATION & DESIGN BUREAU)		**SCALE :** AS SHOWN
APPROVED : (FOR DIRECTOR GENERAL)		**DWG NO.** PB–201
		SHEET NO. 226/RI

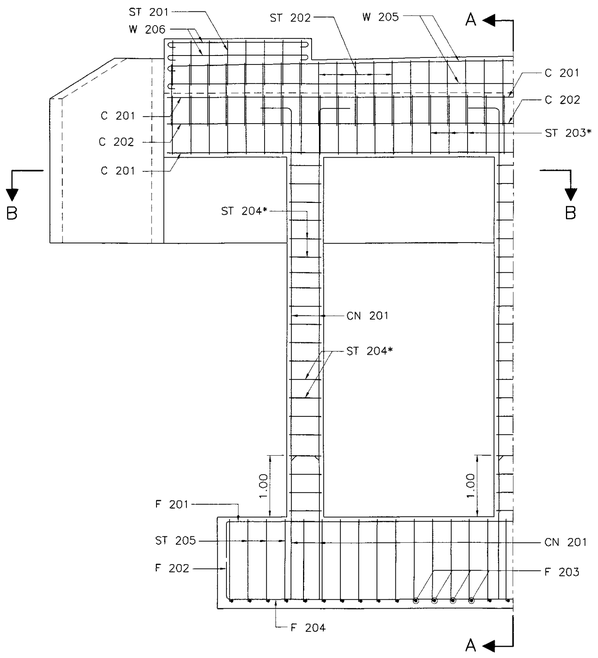

ABUTMENT REINFORCEMENT DETAILS
SCALE 1 : 50

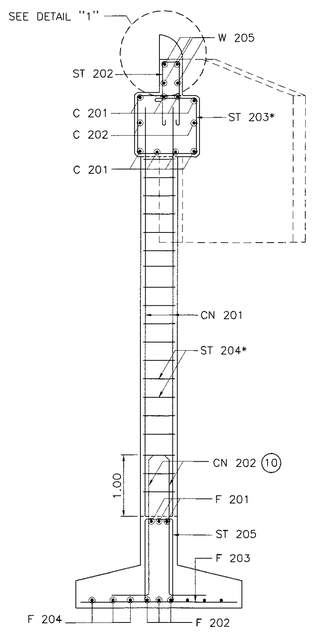

SECTION A – A
SCALE 1 : 50

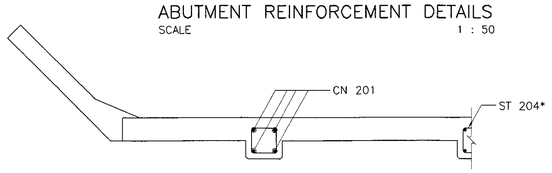

SECTION B – B
SCALE 1 : 50

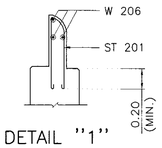

DETAIL "1"
SCALE 1 : 25

TABLE OF REINFORCEMENT								
BAR BENDING DIAGRAMS	No.	BAR MARK	SPAN 5.00 M. REINF.	SPAN 6.00 M. REINF.	SPAN 7.00 M. REINF.	SPAN 8.00 M. REINF.	SPAN 9.00 M. REINF.	SPAN 10.00 MM. REINF.	SPAN 12.00 M. REINF.
	①	C 201	8–DB25	8–DB25	8–DB25	8–DB25	8–DB25	8–DB25	8–DB25
	②	C 202	2–DB12	2–DB12	2–DB12	2–DB12	2–DB12	2–DB12	2–DB12
	③	ST 201	RB9 @ 0.20	RB9 @ 0.20	RB9 @ 0.20	RB9 @ 0.20	RB9 @ 0.20	RB9 @ 0.20	RB9 @ 0.20
	④	ST 202	RB9 @ 0.20	RB9 @ 0.20	RB9 @ 0.20	RB9 @ 0.20	RB9 @ 0.20	RB9 @ 0.20	RB9 @ 0.20
	⑤	ST 203	RB9 @ 0.20	RB9 @ 0.20	RB9 @ 0.20	RB9 @ 0.20	RB9 @ 0.20	RB9 @ 0.20	RB9 @ 0.20
	⑥	ST 204	RB9 @ 0.20	RB9 @ 0.20	RB9 @ 0.20	RB9 @ 0.20	RB9 @ 0.20	RB9 @ 0.20	RB9 @ 0.20
	⑦	ST 205	RB9 @ 0.20	RB9 @ 0.20	RB9 @ 0.20	RB9 @ 0.20	RB9 @ 0.20	RB9 @ 0.20	RB9 @ 0.20
	⑧+	CN 201 (LEVEL 1)	4–DB25	4–DB25	4–DB25	4–DB25	4–DB25	4–DB25	4–DB25
		CN 201 (LEVEL 2)	8–DB25	8–DB25	8–DB25	8–DB25	8–DB25	8–DB25	8–DB25
	⑨+	CN 202	4–DB25	4–DB25	4–DB25	4–DB25	4–DB25	4–DB25	4–DB25
	⑩	F 201	3–DB25	3–DB25	3–DB25	3–DB25	3–DB25	3–DB25	3–DB25
	⑪	F 202	3–DB25	3–DB25	3–DB25	3–DB25	3–DB25	3–DB25	3–DB25
	⑫	F 203	DB25 @ 0.25	DB25 @ 0.25	DB25 @ 0.25	DB25 @ 0.25	DB25 @ 0.25	DB25 @ 0.25	DB25 @ 0.25
	⑬	F 204	6–DB25	6–DB25	6–DB25	6–DB25	6–DB25	6–DB25	6–DB25
	⑭	W 205	4–DB12	4–DB12	4–DB12	4–DB12	4–DB12	4–DB12	4–DB12
	⑮	W 206	3–DB12	3–DB12	3–DB12	3–DB12	3–DB12	3–DB12	3–DB12

REMARK : IF THE DISTANCE BETWEEN THE CENTERLINE OF THE BRACING TO THE EXISTING GROUND LEVEL OF ABUTMENT EXCEED 4.00 M., OTHER TYPE OF ABUTMENT AS DWG. NO. PB–310 SHALL BE USED, ⑧+ ⑨+ REINFORCEMENT NUMBERS OF CN 201 AND CN 202 ARE SHOWN PER COLUMN RELEVANT TO SEISMIC LEVEL 1 (1A OR 1B) AND 2.

NOTES :

1. ALL DIMENSIONS SHOWN ARE IN METERS UNLESS OTHERWISE INDICATED.
2. DESIGN LIVE LOAD : HL–93
3. A MINIMUM ULTIMATE COMPRESSIVE STRENGTH FOR A 150x150x150 MM. CUBE AT 28 DAYS AS FOLLOWS:
   A) FOR ABUTMENT AND WINGWALL 35 MPa. (357 KG/CM^2)
   B) FOR FOOTING 35 MPa. (357 KG/CM^2)
   C) FOR SIDEWALK AND BARRIER 35 MPa. (357 KG/CM^2)
4. REBAR SIZES SMALLER THAN 12 MM. SHALL BE TIS 20 GRADE SR 24 PLAIN ROUND BARS, OTHERS SHALL BE TIS 24 GRADE SD 40 DEFORMED BARS UNLESS OTHERWISE INDICATED.
5. EACH SPREAD FOOTING SHALL BE LOCATED BELOW TO A DEPTH WHERE SCOUR WILL NOT AFFECT CAPACITY, THE MINIMUM ALLOWABLE BEARING CAPACITY OF 0.20 MPa (20 TON/M^2)
6. HORIZONTAL CROSS BRACING BETWEEN COLUMNS OF PILE BENT SHALL BE PROVIDED AS FOLLOWS:
   A) IF THE DISTANCE FROM EXISTING GROUND LEVEL TO THE BOTTOM OF THE CAP BEAM EXCEED 3.00 M., A BRACING SHALL BE PLACED IN SUCH A WAY THAT THE DISTANCE FROM THE BOTTOM OF THE CAP BEAM TO THE CENTERLINE OF THE BRACING IS NOT MORE THAN 3.00 M.
   B) IF THE DISTANCE BETWEEN THE CENTERLINE OF THE BRACING TO THE EXISTING GROUND LEVEL EXCEED 3.00 M., ADDITIONAL BRACINGS SHALL BE PROVIDED AT AN INTERVAL NOT MORE THAN 3.00 M.
7. R = 0.50 M. FOR THE BRIDGE WITHOUT SIDEWALK (P = 0.00). FOR THE BRIDGE WITH SIDEWALK OF P = 0.50 AND 1.00, R = 0.50 M. AND 1.00 M., RESPECTIVELY.
8. *ADJUST SPACING OF STEEL REINFORCEMENT IN TABLE BY @ 0.10 (TYP.) TO RESIST EARTHQUAKE FORCE. (IN CASE OF BRIDGE LOCATED IN SEISMIC LEVEL 1B AND 2)

(9) USING 0.45 WHEN PILE BENT AND BEAM ARE IN SALTWATER

(10) LAP SPLICE OF MAIN REINFORCING BAR IS NOT PERMITTED FOR SEISMIC LEVEL 1B AND 2

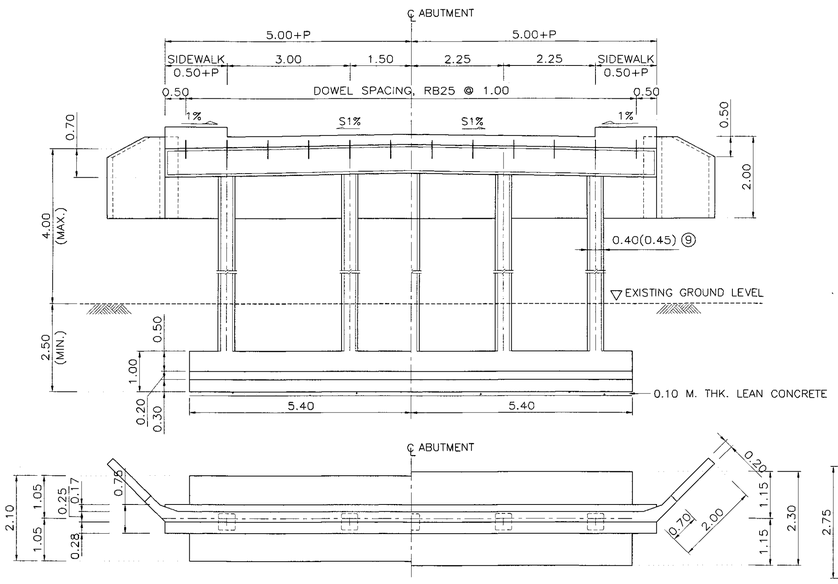

(5.00–6.00 M. SPAN) (7.00–8.00 M. SPAN)

ABUTMENT DETAILS (HALF ELEV. & PLAN)
SCALE 1 : 75

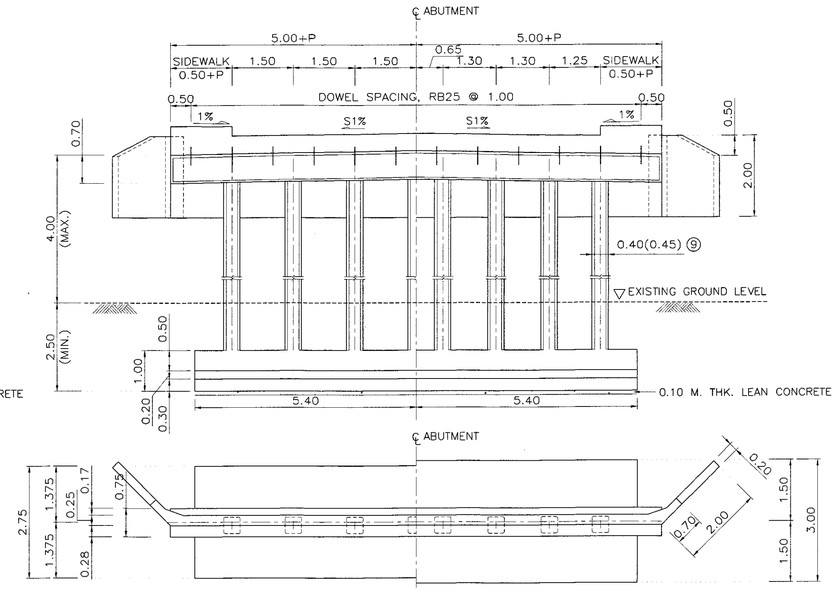

(9.00–10.00 M. SPAN) (12.00 M. SPAN)

ABUTMENT DETAILS (HALF ELEV. & PLAN)
SCALE 1 : 75

REV.	REVISION	SIGNATURE	DATE
REV.1	REVISION 1/2017		JUN 2017

KINGDOM OF THAILAND
MINISTRY OF TRANSPORT
DEPARTMENT OF HIGHWAYS

STANDARD DRAWING

9.00 M. ROADWAY WIDTH SLAB BRIDGE, 0° SKEW
SPREAD FOOTING ABUTMENT DETAIL

DESIGNED : D.O.H. & CONSULTANTS **CHECKED :** BUREAU OF LOCATION & DESIGN **DATE :** OCT 2015

SUBMITTED : (DIRECTOR OF LOCATION & DESIGN BUREAU) **SCALE :** AS SHOWN

APPROVED : (FOR DIRECTOR GENERAL) **DWG NO.** PB–202

SHEET NO. 227/RI

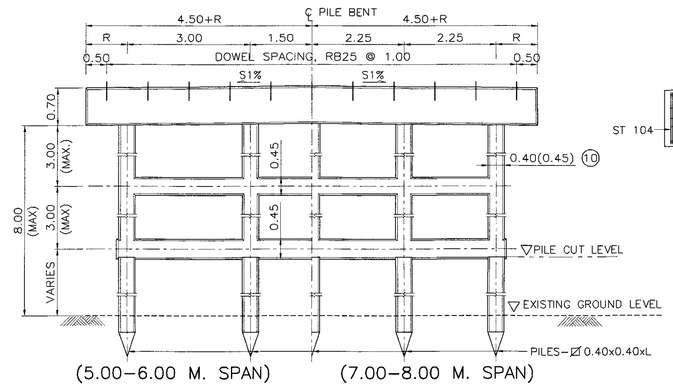

(5.00–6.00 M. SPAN) (7.00–8.00 M. SPAN)

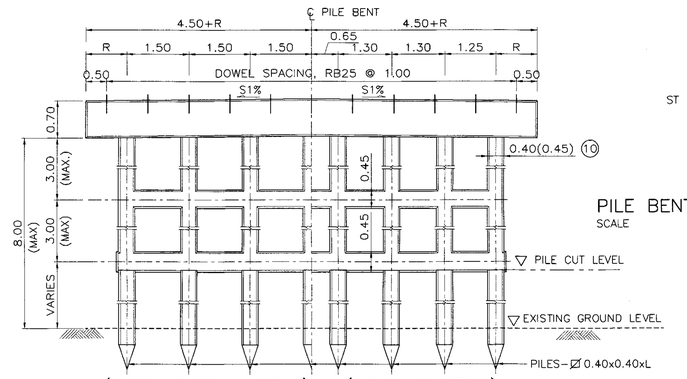

(9.00–10.00 M. SPAN) (12.00 M. SPAN)

PILE BENT DETAILS (HALF ELEV.)
SCALE 1 : 75

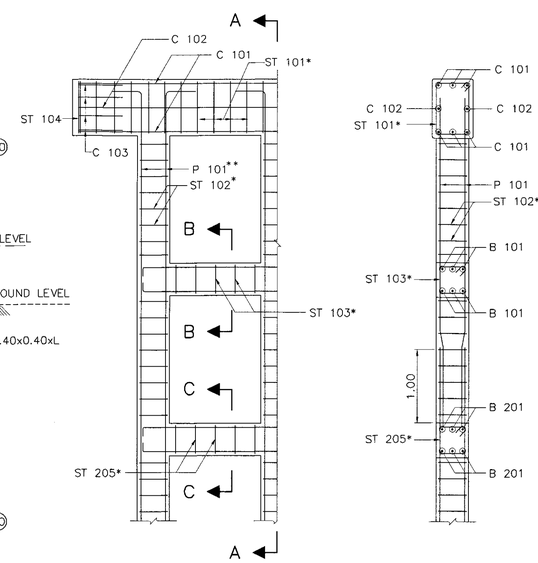

PILE BENT REINFORCEMENT DETAIL
SCALE 1 : 50

SECTION A – A
SCALE 1 : 50

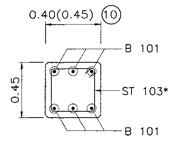

SECTION B – B
SCALE 1 : 25

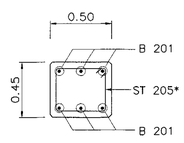

SECTION C – C
SCALE 1 : 25

TABLE OF REINFORCEMENT								
BAR BENDING DIAGRAMS	No.	BAR MARK	SPAN 5.00 M. REINF.	SPAN 6.00 M. REINF.	SPAN 7.00 M. REINF.	SPAN 8.00 M. REINF.	SPAN 9.00 M. REINF.	SPAN 10.00 M. REINF.	SPAN 12.00 M. REINF.
	①	C 101	6–DB25	6–DB25	6–DB25	6–DB25	6–DB25	6–DB25	6–DB25
	②	C 102	2–DB12	2–DB12	2–DB12	2–DB12	2–DB12	2–DB12	2–DB12
	③	C 103	4–DB12	4–DB12	4–DB12	4–DB12	4–DB12	4–DB12	4–DB12
	④	ST 101	RB9 @ 0.20	RB9 @ 0.20	RB9 @ 0.20	RB9 @ 0.20	RB9 @ 0.20	RB9 @ 0.20	RB9 @ 0.20
	⑤	ST 102	RB9 @ 0.20	RB9 @ 0.20	RB9 @ 0.20	RB9 @ 0.20	RB9 @ 0.20	RB9 @ 0.20	RB9 @ 0.20
	⑥	ST 103	DB12 @ 0.20	DB12 @ 0.20	DB12 @ 0.20	DB12 @ 0.20	DB12 @ 0.20	DB12 @ 0.20	DB12 @ 0.20
	⑦	ST 104	2–RB9	2–RB9	2–RB9	2–RB9	2–RB9	2–RB9	2–RB9
	⑧	B 101	6–DB25	6–DB25	6–DB25	6–DB25	6–DB25	6–DB25	6–DB25
	⑨+	P 101 (LEVEL 1)	4–DB25	4–DB25	4–DB25	4–DB25	4–DB25	4–DB25	4–DB25
		P 101 (LEVEL 2)	8–DB25	8–DB25	8–DB25	8–DB25	8–DB25	8–DB25	8–DB25
	⑩	C 201	8–DB25	8–DB25	8–DB25	8–DB25	8–DB25	8–DB25	8–DB25
	⑪	C 202	2–DB12	2–DB12	2–DB12	2–DB12	2–DB12	2–DB12	2–DB12
	⑫	ST 201	RB9 @ 0.20	RB9 @ 0.20	RB9 @ 0.20	RB9 @ 0.20	RB9 @ 0.20	RB9 @ 0.20	RB9 @ 0.20
	⑬	ST 202	RB9 @ 0.20	RB9 @ 0.20	RB9 @ 0.20	RB9 @ 0.20	RB9 @ 0.20	RB9 @ 0.20	RB9 @ 0.20
	⑭	ST 203	RB9 @ 0.20	RB9 @ 0.20	RB9 @ 0.20	RB9 @ 0.20	RB9 @ 0.20	RB9 @ 0.20	RB9 @ 0.20
	⑮	ST 204	RB9 @ 0.20	RB9 @ 0.20	RB9 @ 0.20	RB9 @ 0.20	RB9 @ 0.20	RB9 @ 0.20	RB9 @ 0.20
	⑯	ST 205	DB12 @ 0.20	DB12 @ 0.20	DB12 @ 0.20	DB12 @ 0.20	DB12 @ 0.20	DB12 @ 0.20	DB12 @ 0.20
	⑰	B 201	6–DB25	6–DB25	6–DB25	6–DB25	6–DB25	6–DB25	6–DB25
	⑱+	P 201 (LEVEL 1)	4–DB25	4–DB25	4–DB25	4–DB25	4–DB25	4–DB25	4–DB25
		P 201 (LEVEL 2)	8–DB25	8–DB25	8–DB25	8–DB25	8–DB25	8–DB25	8–DB25
	⑲	W 205	4–DB12	4–DB12	4–DB12	4–DB12	4–DB12	4–DB12	4–DB12
	⑳	W 206	3–DB12	3–DB12	3–DB12	3–DB12	3–DB12	3–DB12	3–DB12

REMARK : ⑨+, ⑱+ = REINFORCEMENT NUMBERS OF P 101 AND P 201 ARE SHOWN PER COLUMN RELEVANT TO SEISMIC LEVEL 1 (1A OR 1B) AND 2

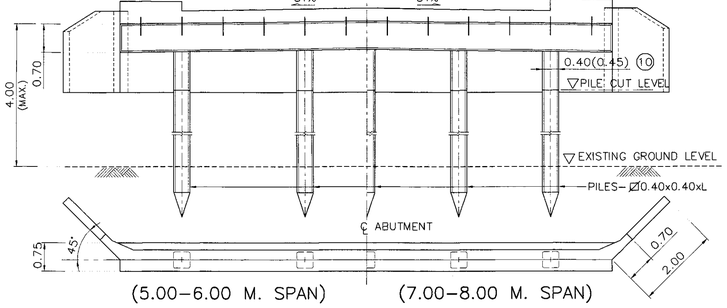

(5.00–6.00 M. SPAN) (7.00–8.00 M. SPAN)

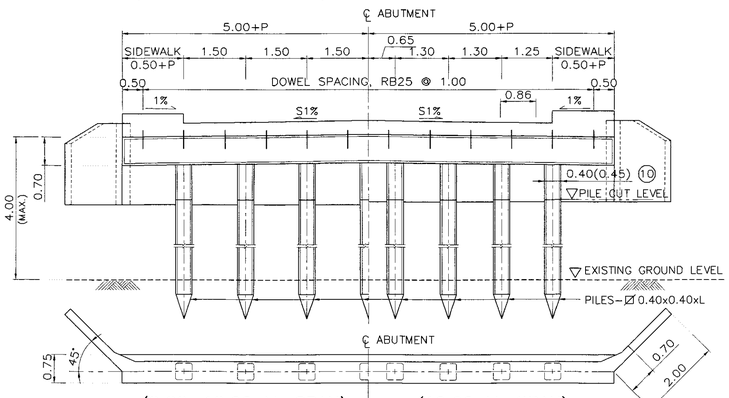

(9.00–10.00 M. SPAN) (12.00 M. SPAN)

ABUTMENT DETAILS (HALF ELEV. & PLAN)
SCALE 1 : 75

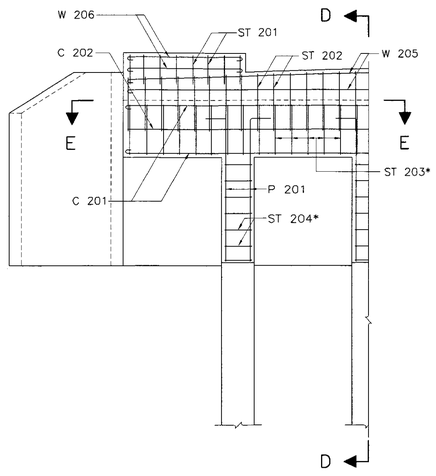

ABUTMENT REINFORCEMENT
SCALE 1 : 50

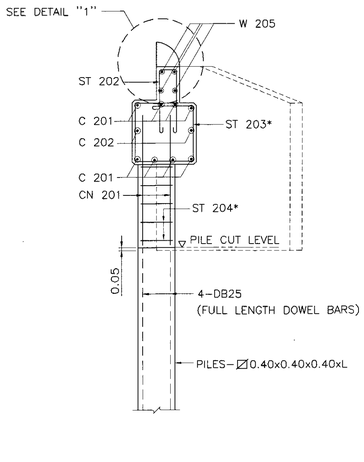

SECTION D – D
SCALE 1 : 50

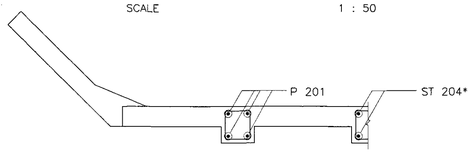

SECTION E – E
SCALE 1 : 50

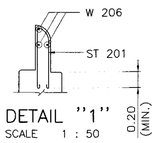

DETAIL "1"
SCALE 1 : 50

NOTES :

1. ALL DIMENSIONS SHOWN ARE IN METERS UNLESS OTHERWISE INDICATED.
2. DESIGN LIVE LOAD : HL–93
3. A MINIMUM ULTIMATE COMPRESSIVE STRENGTH FOR A 150x150x150 MM. CUBE AT 28 DAYS AS FOLLOWS:
   A) FOR PILE BENT/CAP BEAM 35 MPa. (357 KG/CM^2)
   B) FOR ABUTMENT/FOOTING/DRIVEN PILE 35 MPa. (357 KG/CM^2)
   C) FOR PRECAST DRIVEN PILE 45 MPa. (459 KG/CM^2)
   D) FOR SIDEWALK AND BARRIER 35 MPa. (357 KG/CM^2)
4. REBAR SIZES SMALLER THAN 12 MM. SHALL BE TIS 20 GRADE SR 24 PLAIN ROUND BARS, OTHERS SHALL BE TIS 24 GRADE SD 40 DEFORMED BARS UNLESS OTHERWISE INDICATED.
5. EACH PILE SHALL BE DRIVEN TO A DEPTH WHERE SCOUR WILL NOT AFFECT CAPACITY, THE MINIMUM ALLOWABLE CAPACITY OF 0.50 MN (50 TON) FOR EACH PILE AND A MINIMUM 3.50 M. EMBEDED LENGTH UNDER A DEPTH ARE REQUIRED
6. HORIZONTAL CROSS BRACING BETWEEN COLUMNS OF PILE BENT SHALL BE PROVIDED AS FOLLOWS:
   A) IF THE DISTANCE FROM EXISTING GROUND LEVEL TO THE BOTTOM OF THE CAP BEAM EXCEED 3.00 M., A BRACING SHALL BE PLACED IN SUCH A WAY THAT THE DISTANCE FROM THE BOTTOM OF THE CAP BEAM TO THE CENTERLINE OF THE BRACING IS NOT MORE THAN 3.00 M.
   B) IF THE DISTANCE BETWEEN THE CENTERLINE OF THE BRACING TO THE EXISTING GROUND LEVEL EXCEED 3.00 M., ADDITIONAL BRACINGS SHALL BE PROVIDED AT AN INTERVAL NOT MORE THAN 3.00 M.
7. *ADJUST SPACING OF STEEL REINFORCEMENT IN TABLE BY @ 0.10 (TYP.) TO RESIST EARTHQUAKE FORCE. (IN CASE OF BRIDGE LOCATED IN SEISMIC LEVEL 1B AND 2)
8. IF THE DISTANCE BETWEEN THE CENTERLINE OF THE BRACING TO THE EXISTING GROUND LEVEL OF ABUTMENT EXCEED 4.00 M., OTHER TYPE OF ABUTMENT AS DWG. NO. PB–309 SHALL BE USED.
9. R = 0.50 M. FOR THE BRIDGE WITHOUT SIDEWALK (P = 0.00). FOR THE BRIDGE WITH SIDEWALK OF P = 0.50 AND 1.00, R = 0.50 M. AND 1.00 M., RESPECTIVELY.
10. USING 0.45 WHEN PILE BENT AND BEAM ARE IN SALTWATER

KINGDOM OF THAILAND

MINISTRY OF TRANSPORT
DEPARTMENT OF HIGHWAYS

STANDARD DRAWING

9.00 M. ROADWAY WIDTH SLAB BRIDGE, 0° SKEW
PILE BENT AND ABUTMENT DETAILS

DESIGNED : D.O.H. & CONSULTANTS	**CHECKED :** BUREAU OF LOCATION & DESIGN	**DATE :** OCT 2015	
SUBMITTED : (DIRECTOR OF LOCATION & DESIGN BUREAU)		**SCALE :** AS SHOWN	
APPROVED : (FOR DIRECTOR GENERAL)		**DWG NO.** PB–203	
		SHEET NO. 228/R1	

REV.	REVISION	SIGNATURE	DATE
REV.1	REVISION 1/2017		JUN 2017

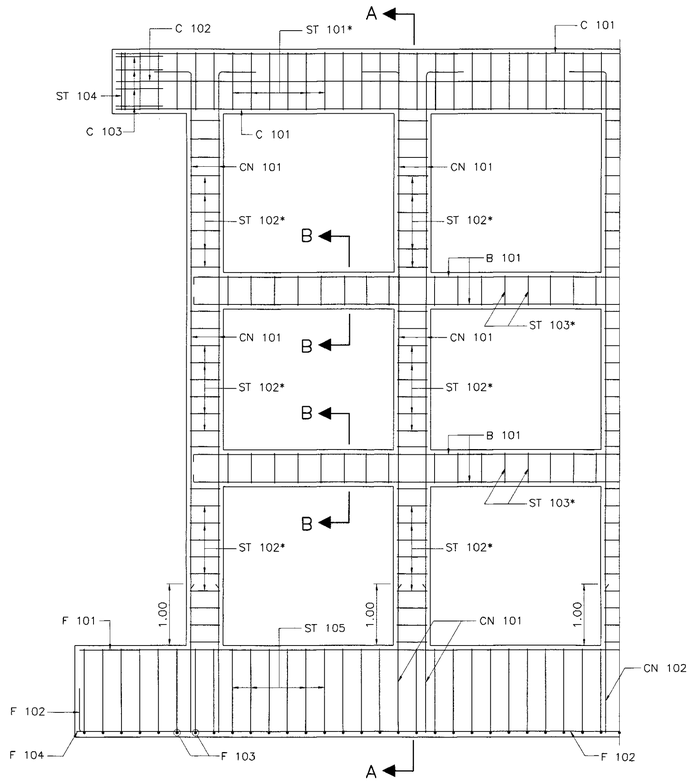

PIER REINFORCEMENT DETAILS
SCALE 1 : 50

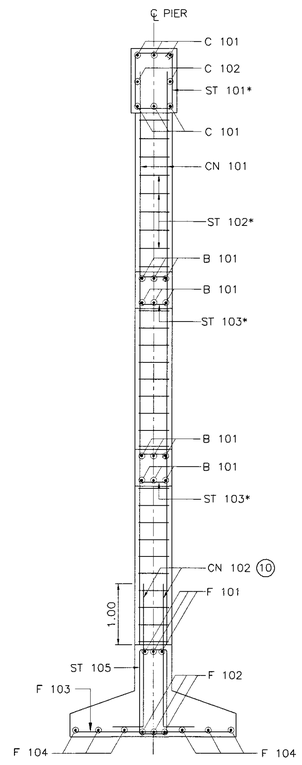

SECTION A – A
SCALE 1 : 50

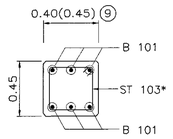

SECTION B – B
SCALE 1 : 25

TABLE OF REINFORCEMENT								
BAR BENDING DIAGRAMS	No.	BAR MARK	SPAN 5.00 M. REINF.	SPAN 6.00 M. REINF.	SPAN 7.00 M. REINF.	SPAN 8.00 M. REINF.	SPAN 9.00 M. REINF.	SPAN 10.00 M. REINF.	SPAN 12.00 M. REINF.
	(1)	C 101	6-DB25	6-DB25	6-DB25	6-DB25	6-DB25	6-DB25	6-DB25
	(2)	C 102	2-DB12	2-DB12	2-DB12	2-DB12	2-DB12	2-DB12	2-DB12
	(3)	C 103	4-DB12	4-DB12	4-DB12	4-DB12	4-DB12	4-DB12	4-DB12
	(4)+	CN 101 (LEVEL 1)	4-DB25	4-DB25	4-DB25	4-DB25	4-DB25	4-DB25	4-DB25
		CN 101 (LEVEL 2)	8-DB25	8-DB25	8-DB25	8-DB25	8-DB25	8-DB25	8-DB25
	(5)+	CN 102	4-DB25	4-DB25	4-DB25	4-DB25	4-DB25	4-DB25	4-DB25
	(6)	ST 101	RB9 @ 0.20	RB9 @ 0.20	RB9 @ 0.20	RB9 @ 0.20	RB9 @ 0.20	RB9 @ 0.20	RB9 @ 0.20
	(7)	ST 102	RB9 @ 0.20	RB9 @ 0.20	RB9 @ 0.20	RB9 @ 0.20	RB9 @ 0.20	RB9 @ 0.20	RB9 @ 0.20
	(8)	ST 103	DB12 @ 0.20	DB12 @ 0.20	DB12 @ 0.20	DB12 @ 0.20	DB12 @ 0.20	DB12 @ 0.20	DB12 @ 0.20
	(9)	ST 104	2-RB9	2-RB9	2-RB9	2-RB9	2-RB9	2-RB9	2-RB9
	(10)	ST 105	RB9 @ 0.20	RB9 @ 0.20	RB9 @ 0.20	RB9 @ 0.20	RB9 @ 0.20	RB9 @ 0.20	RB9 @ 0.20
	(11)	B 101	6-DB25	6-DB25	6-DB25	6-DB25	6-DB25	6-DB25	6-DB25
	(12)	F 101	3-DB25	3-DB25	3-DB25	3-DB25	3-DB25	3-DB25	3-DB25
	(13)	F 102	3-DB25	3-DB25	3-DB25	3-DB25	3-DB25	3-DB25	3-DB25
	(14)	F 103	DB25 @ 0.25	DB25 @ 0.25	DB25 @ 0.25	DB25 @ 0.25	DB25 @ 0.25	DB25 @ 0.25	DB25 @ 0.25
	(15)	F 104	6-DB25	6-DB25	6-DB25	6-DB25	6-DB25	6-DB25	6-DB25

REMARK : (4)+,(5)+ = REINFORCEMENT NUMBERS OF CN 101 AND CN 102 ARE SHOWN PER COLUMN RELEVANT TO SEISMIC LEVEL 1 (1A OR 1B) AND 2

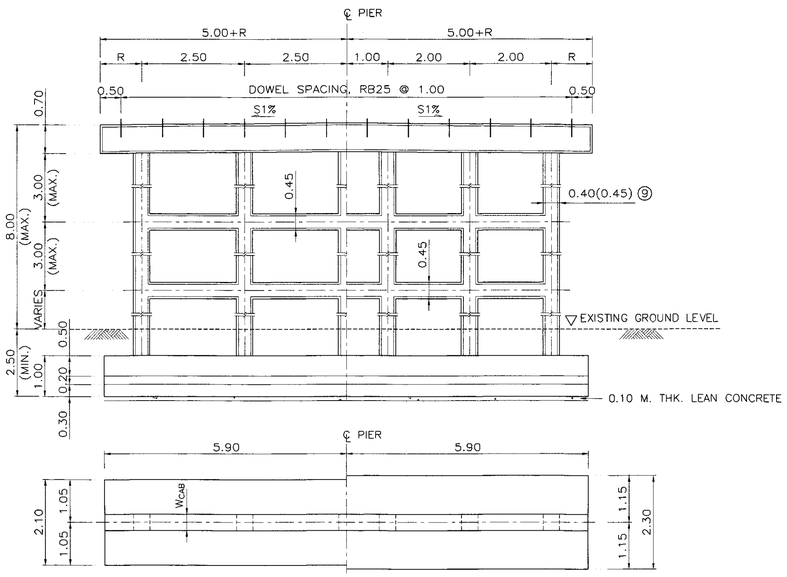

(5.00–6.00 M. SPAN) (7.00–8.00 M. SPAN)

PIER DETAILS (HALF ELEV. & PLAN)
SCALE 1 : 75

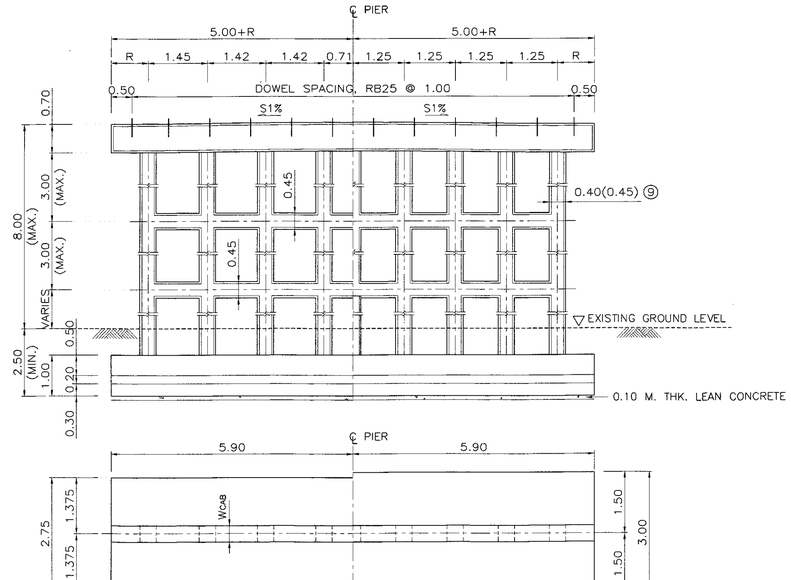

(9.00–10.00 M. SPAN) (12.00 M. SPAN)

PIER DETAILS (HALF ELEV. & PLAN)
SCALE 1 : 75

NOTES :

1. ALL DIMENSIONS SHOWN ARE IN METERS UNLESS OTHERWISE INDICATED.
2. DESIGN LIVE LOAD : HL-93
3. A MINIMUM ULTIMATE COMPRESSIVE STRENGTH FOR A 150x150x150 MM. CUBE AT 28 DAYS AS FOLLOWS:
   A) FOR PILE BENT/CAP BEAM 35 MPa. (357 KG/CM^2)
   B) FOR FOOTING 35 MPa. (357 KG/CM^2)
   C) FOR SIDEWALK AND BARRIER 35 MPa. (357 KG/CM^2)
4. REBAR SIZES SMALLER THAN 12 MM. SHALL BE TIS 20 GRADE SR 24 PLAIN ROUND BARS, OTHERS SHALL BE TIS 24 GRADE SD 40 DEFORMED BARS UNLESS OTHERWISE INDICATED.
5. EACH SPREAD FOOTING SHALL BE LOCATED BELOW TO A DEPTH WHERE SCOUR WILL NOT AFFECT CAPACITY, THE MINIMUM ALLOWABLE BEARING CAPACITY OF 0.20 MPa (20 TON/M^2)
6. HORIZONTAL CROSS BRACING BETWEEN COLUMNS OF PILE BENT SHALL BE PROVIDED AS FOLLOWS:
   A) IF THE DISTANCE FROM EXISTING GROUND LEVEL TO THE BOTTOM OF THE CAP BEAM EXCEED 3.00 M., A BRACING SHALL BE PLACED IN SUCH A WAY THAT THE DISTANCE FROM THE BOTTOM OF THE CAP BEAM TO THE CENTERLINE OF THE BRACING IS NOT MORE THAN 3.00 M.
   B) IF THE DISTANCE BETWEEN THE CENTERLINE OF THE BRACING TO THE EXISTING GROUND LEVEL EXCEED 3.00 M., ADDITIONAL BRACINGS SHALL BE PROVIDED AT AN INTERVAL NOT MORE THAN 3.00 M.
7. *ADJUST SPACING OF STEEL REINFORCEMENT IN TABLE BY @ 0.10 (TYP.) TO RESIST EARTHQUAKE FORCE. (IN CASE OF BRIDGE LOCATED IN SEISMIC LEVEL 1B AND 2)
8. R = 0.50 M. FOR THE BRIDGE WITHOUT SIDEWALK (P = 0.00). FOR THE BRIDGE WITH SIDEWALK OF P = 0.50 AND 1.00, R = 0.50 M. AND 1.00 M., RESPECTIVELY.

(9) USING 0.45 WHEN PILE BENT AND BEAM ARE IN SALTWATER

(10) LAP SPLICE OF MAIN REINFORCING BAR IS NOT PERMITTED FOR SEISMIC LEVEL 1B AND 2

KINGDOM OF THAILAND

MINISTRY OF TRANSPORT
DEPARTMENT OF HIGHWAYS

STANDARD DRAWING

10.00 M. ROADWAY WIDTH SLAB BRIDGE, 0° SKEW
SPREAD FOOTING PIER DETAIL

REV.	REVISION	SIGNATURE	DATE
REV.1	REVISION 1/2017		JUN 2017

DESIGNED : D.O.H. & CONSULTANTS	**CHECKED :** BUREAU OF LOCATION & DESIGN	**DATE :** OCT 2015	
SUBMITTED : (DIRECTOR OF LOCATION & DESIGN BUREAU)		**SCALE :** AS SHOWN	
APPROVED : (FOR DIRECTOR GENERAL)		**DWG NO.** PB-204	
		SHEET NO. 229/RI	

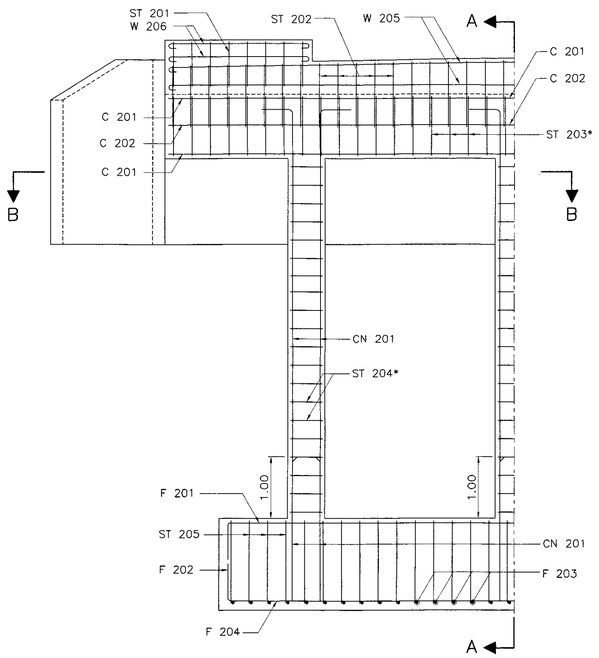

ABUTMENT REINFORCEMENT DETAILS
SCALE 1 : 50

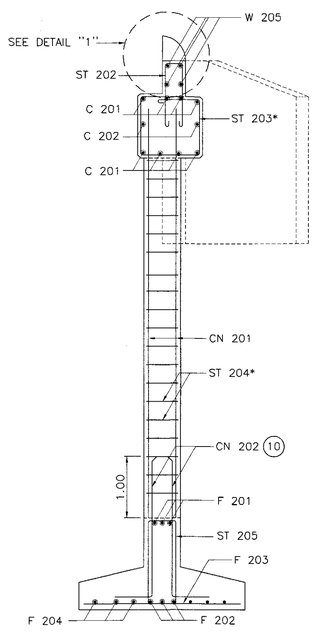

SECTION A – A
SCALE 1 : 50

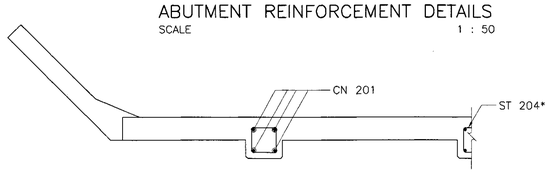

SECTION B – B
SCALE 1 : 50

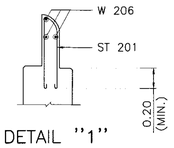

DETAIL "1"
SCALE 1 : 25

TABLE OF REINFORCEMENT								
BAR BENDING DIAGRAMS	No.	BAR MARK	SPAN 5.00 M. REINF.	SPAN 6.00 M. REINF.	SPAN 7.00 M. REINF.	SPAN 8.00 M. REINF.	SPAN 9.00 M. REINF.	SPAN 10.00 MM. REINF.	SPAN 12.00 M. REINF.
	①	C 201	8–DB25	8–DB25	8–DB25	8–DB25	8–DB25	8–DB25	8–DB25
	②	C 202	2–DB12	2–DB12	2–DB12	2–DB12	2–DB12	2–DB12	2–DB12
	③	ST 201	RB9 @ 0.20	RB9 @ 0.20	RB9 @ 0.20	RB9 @ 0.20	RB9 @ 0.20	RB9 @ 0.20	RB9 @ 0.20
	④	ST 202	RB9 @ 0.20	RB9 @ 0.20	RB9 @ 0.20	RB9 @ 0.20	RB9 @ 0.20	RB9 @ 0.20	RB9 @ 0.20
	⑤	ST 203	RB9 @ 0.20	RB9 @ 0.20	RB9 @ 0.20	RB9 @ 0.20	RB9 @ 0.20	RB9 @ 0.20	RB9 @ 0.20
	⑥	ST 204	RB9 @ 0.20	RB9 @ 0.20	RB9 @ 0.20	RB9 @ 0.20	RB9 @ 0.20	RB9 @ 0.20	RB9 @ 0.20
	⑦	ST 205	RB9 @ 0.20	RB9 @ 0.20	RB9 @ 0.20	RB9 @ 0.20	RB9 @ 0.20	RB9 @ 0.20	RB9 @ 0.20
	⑧+	CN 201 (LEVEL 1)	4–DB25	4–DB25	4–DB25	4–DB25	4–DB25	4–DB25	4–DB25
		CN 201 (LEVEL 2)	8–DB25	8–DB25	8–DB25	8–DB25	8–DB25	8–DB25	8–DB25
	⑨+	CN 202	4–DB25	4–DB25	4–DB25	4–DB25	4–DB25	4–DB25	4–DB25
	⑩	F 201	3–DB25	3–DB25	3–DB25	3–DB25	3–DB25	3–DB25	3–DB25
	⑪	F 202	3–DB25	3–DB25	3–DB25	3–DB25	3–DB25	3–DB25	3–DB25
	⑫	F 203	DB25 @ 0.25	DB25 @ 0.25	DB25 @ 0.25	DB25 @ 0.25	DB25 @ 0.25	DB25 @ 0.25	DB25 @ 0.25
	⑬	F 204	6–DB25	6–DB25	6–DB25	6–DB25	6–DB25	6–DB25	6–DB25
	⑭	W 205	4–DB12	4–DB12	4–DB12	4–DB12	4–DB12	4–DB12	4–DB12
	⑮	W 206	3–DB25	3–DB25	3–DB25	3–DB25	3–DB25	3–DB25	3–DB25

REMARK : IF THE DISTANCE BETWEEN THE CENTERLINE OF THE BRACING TO THE EXISTING GROUND LEVEL OF ABUTMENT EXCEED 4.00 M., OTHER TYPE OF ABUTMENT AS DWG. NO. PB–310 SHALL BE USED, ⑧+ ⑨+ REINFORCEMENT NUMBERS OF CN 201 AND CN 202 ARE SHOWN PER COLUMN RELEVANT TO SEISMIC LEVEL 1 (1A OR 1B) AND 2.

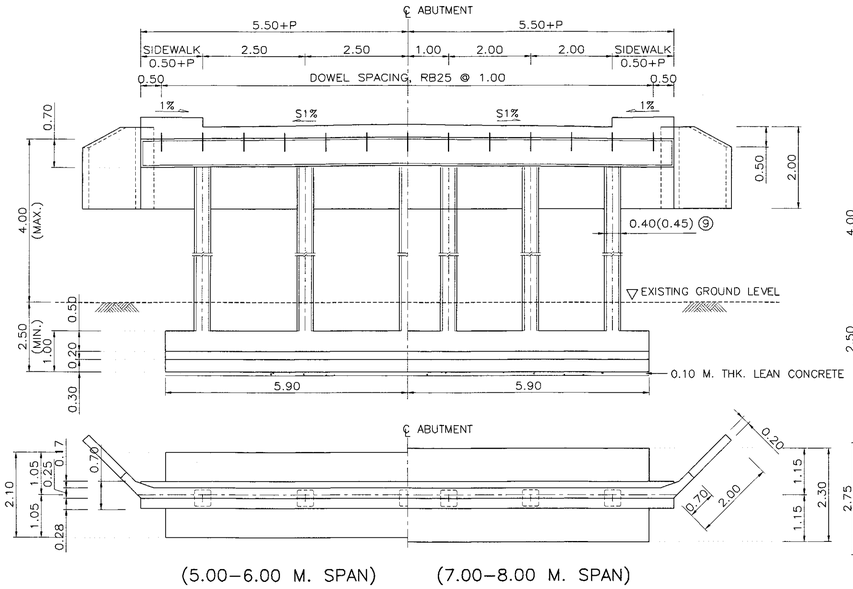

(5.00–6.00 M. SPAN) (7.00–8.00 M. SPAN)

ABUTMENT DETAILS (HALF ELEV. & PLAN)
SCALE 1 : 75

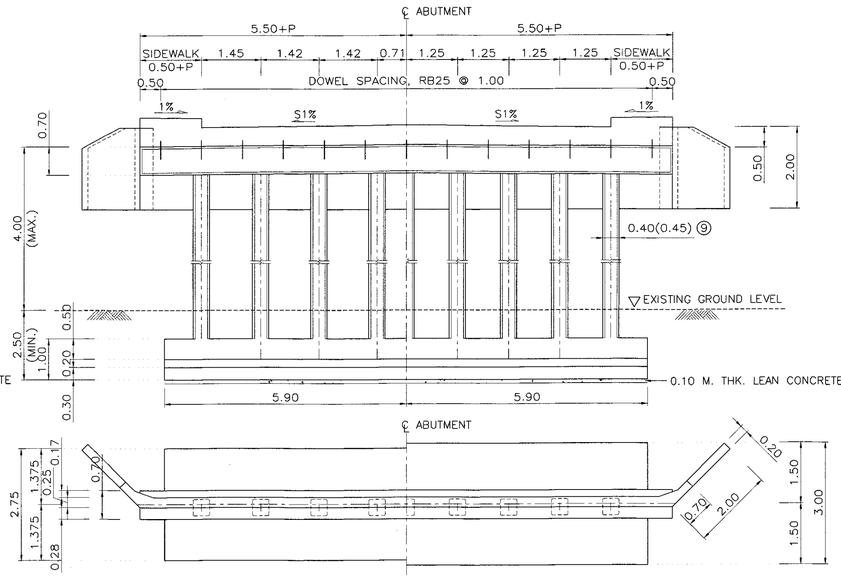

(9.00–10.00 M. SPAN) (12.00 M. SPAN)

ABUTMENT DETAILS (HALF ELEV. & PLAN)
SCALE 1 : 75

NOTES :

1. ALL DIMENSIONS SHOWN ARE IN METERS UNLESS OTHERWISE INDICATED.
2. DESIGN LIVE LOAD : HL–93
3. A MINIMUM ULTIMATE COMPRESSIVE STRENGTH FOR A 150x150x150 MM. CUBE AT 28 DAYS AS FOLLOWS:
   A) FOR PILE BENT/CAP BEAM 35 MPa. (357 KG/CM^2)
   B) FOR FOOTING 35 MPa. (357 KG/CM^2)
   C) FOR SIDEWALK AND BARRIER 35 MPa. (357 KG/CM^2)
4. REBAR SIZES SMALLER THAN 12 MM. SHALL BE TIS 20 GRADE SR 24 PLAIN ROUND BARS, OTHERS SHALL BE TIS 24 GRADE SD 40 DEFORMED BARS UNLESS OTHERWISE INDICATED.
5. EACH SPREAD FOOTING SHALL BE LOCATED BELOW TO A DEPTH WHERE SCOUR WILL NOT AFFECT CAPACITY, THE MINIMUM ALLOWABLE BEARING CAPACITY OF 0.20 MPa (20 TON/M^2)
6. HORIZONTAL CROSS BRACING BETWEEN COLUMNS OF PILE BENT SHALL BE PROVIDED AS FOLLOWS:
   A) IF THE DISTANCE FROM EXISTING GROUND LEVEL TO THE BOTTOM OF THE CAP BEAM EXCEED 3.00 M., A BRACING SHALL BE PLACED IN SUCH A WAY THAT THE DISTANCE FROM THE BOTTOM OF THE CAP BEAM TO THE CENTERLINE OF THE BRACING IS NOT MORE THAN 3.00 M.
   B) IF THE DISTANCE BETWEEN THE CENTERLINE OF THE BRACING TO THE EXISTING GROUND LEVEL EXCEED 3.00 M., ADDITIONAL BRACINGS SHALL BE PROVIDED AT AN INTERVAL NOT MORE THAN 3.00 M.
7. *ADJUST SPACING OF STEEL REINFORCEMENT IN TABLE BY @ 0.10 (TYP.) TO RESIST EARTHQUAKE FORCE. (IN CASE OF BRIDGE LOCATED IN SEISMIC LEVEL 1B AND 2)
8. R = 0.50 M. FOR THE BRIDGE WITHOUT SIDEWALK (P = 0.00). FOR THE BRIDGE WITH SIDEWALK OF P = 0.50 AND 1.00, R = 0.50 M. AND 1.00 M., RESPECTIVELY.

⑨ USING 0.45 WHEN PILE BENT AND BEAM ARE IN SALTWATER

⑩ LAP SPLICE OF MAIN REINFORCING BAR IS NOT PERMITTED FOR SEISMIC LEVEL 1B AND 2

KINGDOM OF THAILAND

MINISTRY OF TRANSPORT
DEPARTMENT OF HIGHWAYS

STANDARD DRAWING

10.00 M. ROADWAY WIDTH SLAB BRIDGE, 0° SKEW
SPREAD FOOTING ABUTMENT DETAIL

DESIGNED : D.O.H. & CONSULTANTS	**CHECKED :** BUREAU OF LOCATION & DESIGN	**DATE :** OCT 2015	
SUBMITTED : (DIRECTOR OF LOCATION & DESIGN BUREAU)		**SCALE :** AS SHOWN	
APPROVED : (FOR DIRECTOR GENERAL)		**DWG NO.** PB–205	
		SHEET NO. 230/R1	

REV.	REVISION	SIGNATURE	DATE
REV.1	REVISION 1/2017		JUN 2017

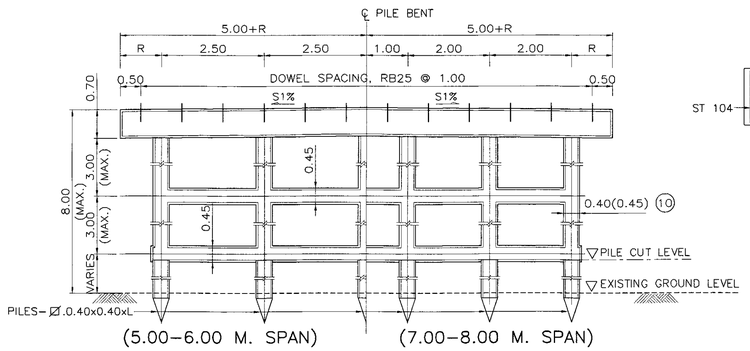

(5.00–6.00 M. SPAN) (7.00–8.00 M. SPAN)

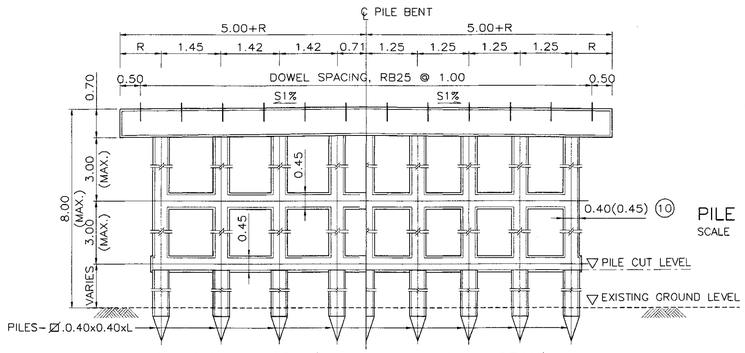

(9.00–10.00 M. SPAN) (12.00 M. SPAN)

PILE BENT DETAILS (HALF ELEV.)

SCALE 1 : 75

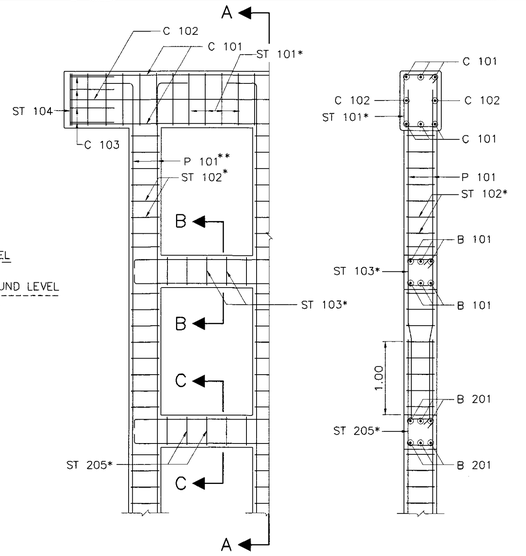

PILE BENT REINFORCEMENT DETAIL

SCALE 1 : 50

SECTION A – A

SCALE 1 : 50

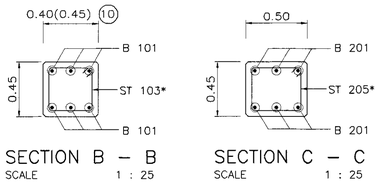

SECTION B – B

SCALE 1 : 25

SECTION C – C

SCALE 1 : 25

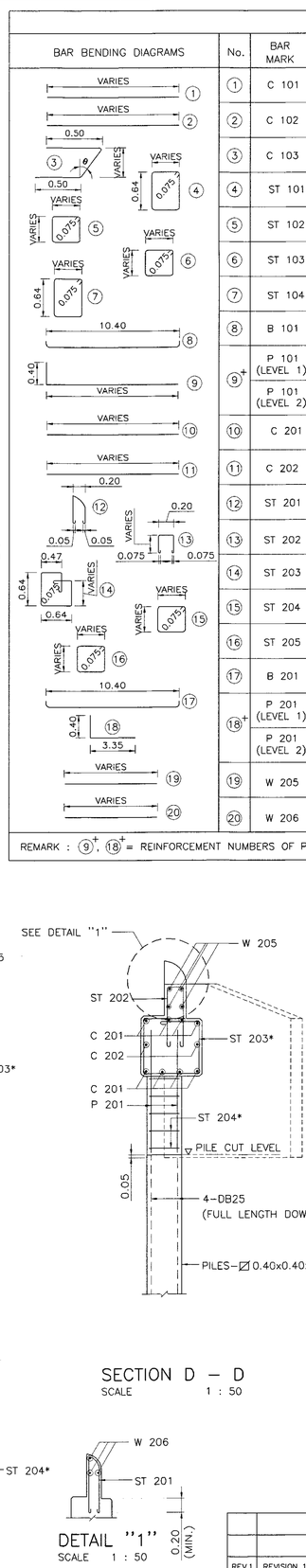

TABLE OF REINFORCEMENT

No.	BAR MARK	SPAN 5.00 M. REINF.	SPAN 6.00 M. REINF.	SPAN 7.00 M. REINF.	SPAN 8.00 M. REINF.	SPAN 9.00 M. REINF.	SPAN 10.00 M. REINF.	SPAN 12.00 M. REINF.
①	C 101	6–DB25	6–DB25	6–DB25	6–DB25	6–DB25	6–DB25	6–DB25
②	C 102	2–DB12	2–DB12	2–DB12	2–DB12	2–DB12	2–DB12	2–DB12
③	C 103	4–DB12	4–DB12	4–DB12	4–DB12	4–DB12	4–DB12	4–DB12
④	ST 101	RB9 @ 0.20	RB9 @ 0.20	RB9 @ 0.20	RB9 @ 0.20	RB9 @ 0.20	RB9 @ 0.20	RB9 @ 0.20
⑤	ST 102	RB9 @ 0.20	RB9 @ 0.20	RB9 @ 0.20	RB9 @ 0.20	RB9 @ 0.20	RB9 @ 0.20	RB9 @ 0.20
⑥	ST 103	DB12 @ 0.20	DB12 @ 0.20	DB12 @ 0.20	DB12 @ 0.20	DB12 @ 0.20	DB12 @ 0.20	DB12 @ 0.20
⑦	ST 104	2–RB9	2–RB9	2–RB9	2–RB9	2–RB9	2–RB9	2–RB9
⑧	B 101	6–DB25	6–DB25	6–DB25	6–DB25	6–DB25	6–DB25	6–DB25
⑨+	P 101 (LEVEL 1)	4–DB25	4–DB25	4–DB25	4–DB25	4–DB25	4–DB25	4–DB25
	P 101 (LEVEL 2)	8–DB25	8–DB25	8–DB25	8–DB25	8–DB25	8–DB25	8–DB25
⑩	C 201	8–DB25	8–DB25	8–DB25	8–DB25	8–DB25	8–DB25	8–DB25
⑪	C 202	2–DB12	2–DB12	2–DB12	2–DB12	2–DB12	2–DB12	2–DB12
⑫	ST 201	RB9 @ 0.20	RB9 @ 0.20	RB9 @ 0.20	RB9 @ 0.20	RB9 @ 0.20	RB9 @ 0.20	RB9 @ 0.20
⑬	ST 202	RB9 @ 0.20	RB9 @ 0.20	RB9 @ 0.20	RB9 @ 0.20	RB9 @ 0.20	RB9 @ 0.20	RB9 @ 0.20
⑭	ST 203	RB9 @ 0.20	RB9 @ 0.20	RB9 @ 0.20	RB9 @ 0.20	RB9 @ 0.20	RB9 @ 0.20	RB9 @ 0.20
⑮	ST 204	RB9 @ 0.20	RB9 @ 0.20	RB9 @ 0.20	RB9 @ 0.20	RB9 @ 0.20	RB9 @ 0.20	RB9 @ 0.20
⑯	ST 205	DB12 @ 0.20	DB12 @ 0.20	DB12 @ 0.20	DB12 @ 0.20	DB12 @ 0.20	DB12 @ 0.20	DB12 @ 0.20
⑰	B 201	6–DB25	6–DB25	6–DB25	6–DB25	6–DB25	6–DB25	6–DB25
⑱+	P 201 (LEVEL 1)	4–DB25	4–DB25	4–DB25	4–DB25	4–DB25	4–DB25	4–DB25
	P 201 (LEVEL 2)	8–DB25	8–DB25	8–DB25	8–DB25	8–DB25	8–DB25	8–DB25
⑲	W 205	4–DB12	4–DB12	4–DB12	4–DB12	4–DB12	4–DB12	4–DB12
⑳	W 206	3–DB12	3–DB12	3–DB12	3–DB12	3–DB12	3–DB12	3–DB12

REMARK : ⑨+, ⑱+ = REINFORCEMENT NUMBERS OF P 101 AND P 201 ARE SHOWN PER COLUMN RELEVANT TO SEISMIC LEVEL 1 (1A OR 1B) AND 2

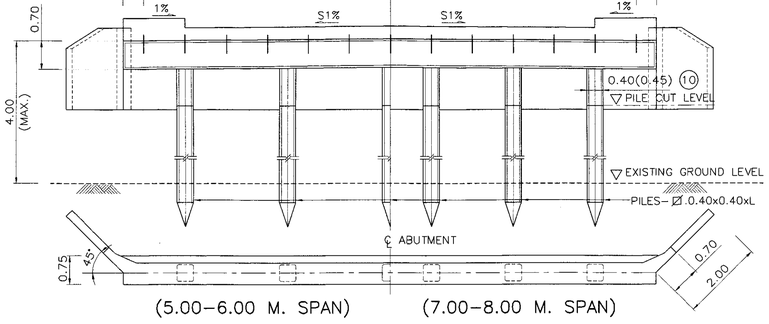

(5.00–6.00 M. SPAN) (7.00–8.00 M. SPAN)

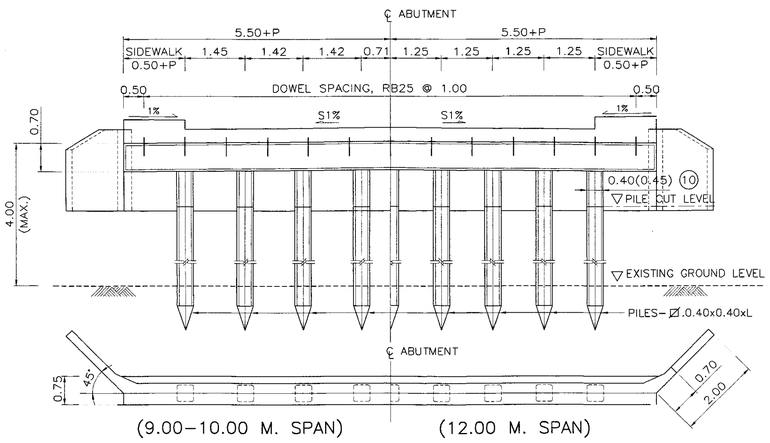

(9.00–10.00 M. SPAN) (12.00 M. SPAN)

ABUTMENT DETAILS (HALF ELEV. & PLAN)

SCALE 1 : 75

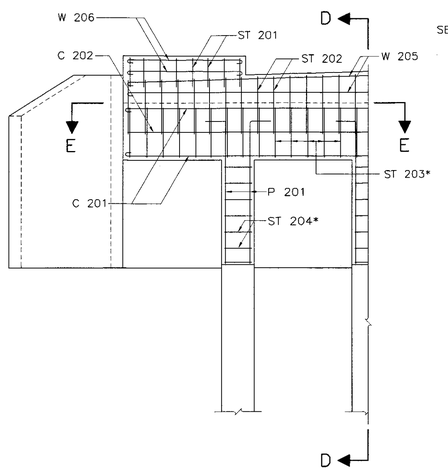

ABUTMENT REINFORCEMENT

SCALE 1 : 50

SECTION D – D

SCALE 1 : 50

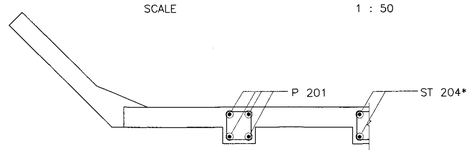

SECTION E – E

SCALE 1 : 50

DETAIL "1"

SCALE 1 : 50

NOTES :

1. ALL DIMENSIONS SHOWN ARE IN METERS UNLESS OTHERWISE INDICATED.
2. DESIGN LIVE LOAD : HL–93
3. A MINIMUM ULTIMATE COMPRESSIVE STRENGTH FOR A 150x150x150 MM. CUBE AT 28 DAYS AS FOLLOWS:
   - A) FOR PILE BENT/CAP BEAM 35 MPa. (357 KG/CM^2)
   - B) FOR ABUTMENT/R.C. DRIVEN PILE 35 MPa. (357 KG/CM^2)
   - C) FOR PRECAST DRIVEN PILE 45 MPa. (459 KG/CM^2)
   - D) FOR SIDEWALK AND BARRIER 35 MPa. (357 KG/CM^2)
4. REBAR SIZES SMALLER THAN 12 MM. SHALL BE TIS 20 GRADE SR 24 PLAIN ROUND BARS, OTHERS SHALL BE TIS 24 GRADE SD 40 DEFORMED BARS UNLESS OTHERWISE INDICATED.
5. EACH PILE SHALL BE DRIVEN TO A DEPTH WHERE SCOUR WILL NOT AFFECT CAPACITY, THE MINIMUM ALLOWABLE CAPACITY OF 0.50 MN (50 TON) FOR EACH PILE AND A MINIMUM 3.50 M. EMBEDED LENGTH UNDER A DEPTH ARE REQUIRED
6. HORIZONTAL CROSS BRACING BETWEEN COLUMNS OF PILE BENT SHALL BE PROVIDED AS FOLLOWS:
   - A) IF THE DISTANCE FROM EXISTING GROUND LEVEL TO THE BOTTOM OF THE CAP BEAM EXCEED 3.00 M., A BRACING SHALL BE PLACED IN SUCH A WAY THAT THE DISTANCE FROM THE BOTTOM OF THE CAP BEAM TO THE CENTERLINE OF THE BRACING IS NOT MORE THAN 3.00 M.
   - B) IF THE DISTANCE BETWEEN THE CENTERLINE OF THE BRACING TO THE EXISTING GROUND LEVEL EXCEED 3.00 M., ADDITIONAL BRACINGS SHALL BE PROVIDED AT AN INTERVAL NOT MORE THAN 3.00 M.
7. *ADJUST SPACING OF STEEL REINFORCEMENT IN TABLE BY @ 0.10 (TYP.) TO RESIST EARTHQUAKE FORCE. (IN CASE OF BRIDGE LOCATED IN SEISMIC LEVEL 1B AND 2)
8. IF THE DISTANCE BETWEEN THE CENTERLINE OF THE BRACING TO THE EXISTING GROUND LEVEL OF ABUTMENT EXCEED 4.00 M., OTHER TYPE OF ABUTMENT AS DWG. NO. PB–309 SHALL BE USED.
9. R = 0.50 M. FOR THE BRIDGE WITHOUT SIDEWALK (P = 0.00). FOR THE BRIDGE WITH SIDEWALK OF P = 0.50 AND 1.00, R = 0.50 M. AND 1.00 M., RESPECTIVELY.

(10) USING 0.45 WHEN PILE BENT AND BEAM ARE IN SALTWATER

KINGDOM OF THAILAND

MINISTRY OF TRANSPORT

DEPARTMENT OF HIGHWAYS

STANDARD DRAWING

10.00 M. ROADWAY WIDTH SLAB BRIDGE, 0° SKEW

PILE BENT AND ABUTMENT DETAILS

DESIGNED : D.O.H. & CONSULTANTS	**CHECKED :** BUREAU OF LOCATION & DESIGN	**DATE :** OCT 2015	
SUBMITTED : (DIRECTOR OF LOCATION & DESIGN BUREAU)		**SCALE :** AS SHOWN	
APPROVED : (FOR DIRECTOR GENERAL)		**DWG NO.** PB–206	
		SHEET NO. 231/R1	

REV.	REVISION	SIGNATURE	DATE
REV.1	REVISION 1/2017		JUN 2017

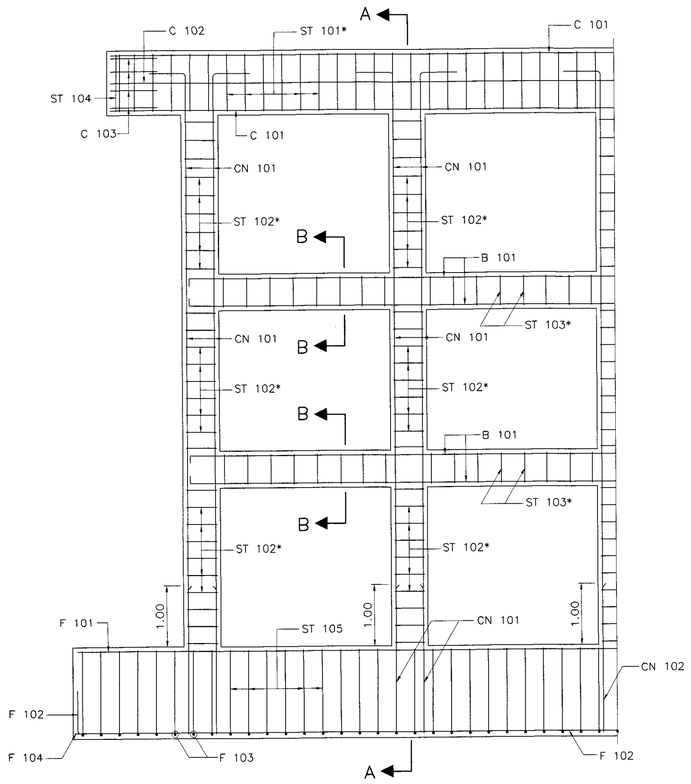

PIER REINFORCEMENT DETAILS
SCALE 1 : 50

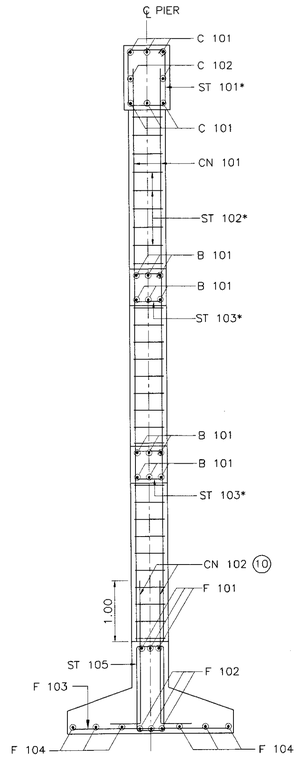

SECTION A – A
SCALE 1 : 50

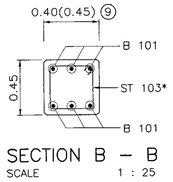

SECTION B – B
SCALE 1 : 25

TABLE OF REINFORCEMENT

BAR BENDING DIAGRAMS	No.	BAR MARK	SPAN 5.00 M. REINF.	SPAN 6.00 M. REINF.	SPAN 7.00 M. REINF.	SPAN 8.00 M. REINF.	SPAN 9.00 M. REINF.	SPAN 10.00 M. REINF.	SPAN 12.00 M. REINF.
	(1)	C 101	6–DB25	6–DB25	6–DB25	6–DB25	6–DB25	6–DB25	6–DB25
	(2)	C 102	2–DB12	2–DB12	2–DB12	2–DB12	2–DB12	2–DB12	2–DB12
	(3)	C 103	4–DB12	4–DB12	4–DB12	4–DB12	4–DB12	4–DB12	4–DB12
	(4)+	CN 101 (LEVEL 1)	4–DB25	4–DB25	4–DB25	4–DB25	4–DB25	4–DB25	4–DB25
		CN 101 (LEVEL 2)	8–DB25	8–DB25	8–DB25	8–DB25	8–DB25	8–DB25	8–DB25
	(5)+	CN 102	4–DB25	4–DB25	4–DB25	4–DB25	4–DB25	4–DB25	4–DB25
	(6)	ST 101	RB9 @ 0.20	RB9 @ 0.20	RB9 @ 0.20	RB9 @ 0.20	RB9 @ 0.20	RB9 @ 0.20	RB9 @ 0.20
	(7)	ST 102	RB9 @ 0.20	RB9 @ 0.20	RB9 @ 0.20	RB9 @ 0.20	RB9 @ 0.20	RB9 @ 0.20	RB9 @ 0.20
	(8)	ST 103	DB12 @ 0.20	DB12 @ 0.20	DB12 @ 0.20	DB12 @ 0.20	DB12 @ 0.20	DB12 @ 0.20	DB12 @ 0.20
	(9)	ST 104	2–RB9	2–RB9	2–RB9	2–RB9	2–RB9	2–RB9	2–RB9
	(10)	ST 105	RB9 @ 0.20	RB9 @ 0.20	RB9 @ 0.20	RB9 @ 0.20	RB9 @ 0.20	RB9 @ 0.20	RB9 @ 0.20
	(11)	B 101	6–DB25	6–DB25	6–DB25	6–DB25	6–DB25	6–DB25	6–DB25
	(12)	F 101	3–DB25	3–DB25	3–DB25	3–DB25	3–DB25	3–DB25	3–DB25
	(13)	F 102	3–DB25	3–DB25	3–DB25	3–DB25	3–DB25	3–DB25	3–DB25
	(14)	F 103	DB25 @ 0.25	DB25 @ 0.25	DB25 @ 0.25	DB25 @ 0.25	DB25 @ 0.25	DB25 @ 0.25	DB25 @ 0.25
	(15)	F 104	6–DB25	6–DB25	6–DB25	6–DB25	6–DB25	6–DB25	6–DB25

REMARK : (4)+, (5)+ = REINFORCEMENT NUMBERS OF CN 101 AND CN 102 ARE SHOWN PER COLUMN RELEVANT TO SEISMIC LEVEL 1 (1A OR 1B) AND 2

NOTES :

1. ALL DIMENSIONS SHOWN ARE IN METERS UNLESS OTHERWISE INDICATED.
2. DESIGN LIVE LOAD : HL-93
3. A MINIMUM ULTIMATE COMPRESSIVE STRENGTH FOR A 150x150x150 MM. CUBE AT 28 DAYS AS FOLLOWS:
   A) FOR PILE BENT/CAP BEAM 35 MPa. (357 KG/CM^2)
   B) FOR FOOTING 35 MPa. (357 KG/CM^2)
   C) FOR SIDEWALK AND BARRIER 35 MPa. (357 KG/CM^2)
4. REBAR SIZES SMALLER THAN 12 MM. SHALL BE TIS 20 GRADE SR 24 PLAIN ROUND BARS, OTHERS SHALL BE TIS 24 GRADE SD 40 DEFORMED BARS UNLESS OTHERWISE INDICATED.
5. EACH SPREAD FOOTING SHALL BE LOCATED BELOW TO A DEPTH WHERE SCOUR WILL NOT AFFECT CAPACITY, THE MINIMUM ALLOWABLE BEARING CAPACITY OF 0.20 MPa (20 TON/M^2)
6. HORIZONTAL CROSS BRACING BETWEEN COLUMNS OF PILE BENT SHALL BE PROVIDED AS FOLLOWS:
   A) IF THE DISTANCE FROM EXISTING GROUND LEVEL TO THE BOTTOM OF THE CAP BEAM EXCEED 3.00 M., A BRACING SHALL BE PLACED IN SUCH A WAY THAT THE DISTANCE FROM THE BOTTOM OF THE CAP BEAM TO THE CENTERLINE OF THE BRACING IS NOT MORE THAN 3.00 M.
   B) IF THE DISTANCE BETWEEN THE CENTERLINE OF THE BRACING TO THE EXISTING GROUND LEVEL EXCEED 3.00 M., ADDITIONAL BRACINGS SHALL BE PROVIDED AT AN INTERVAL NOT MORE THAN 3.00 M.
7. *ADJUST SPACING OF STEEL REINFORCEMENT IN TABLE BY @ 0.10 (TYP.) TO RESIST EARTHQUAKE FORCE (IN CASE OF BRIDGE LOCATED IN SEISMIC LEVEL 1A AND 2)
8. R = 0.50 M. FOR THE BRIDGE WITHOUT SIDEWALK (P = 0.00). FOR THE BRIDGE WITH SIDEWALK OF P = 0.50 AND 1.00, R = 0.50 M. AND 1.00 M., RESPECTIVELY.

(9) USING 0.45 WHEN PILE BENT AND BEAM ARE IN SALTWATER

(10) LAP SPLICE OF MAIN REINFORCING BAR IS NOT PERMITTED FOR SEISMIC LEVEL 1B AND 2

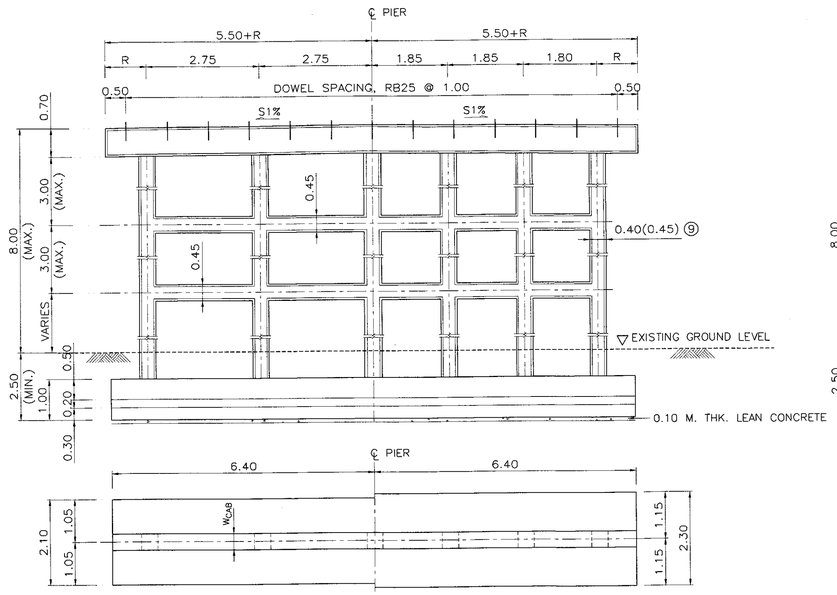

(5.00–6.00 M. SPAN) (7.00–8.00 M. SPAN)

PIER DETAILS (HALF ELEV. & PLAN)
SCALE 1 : 75

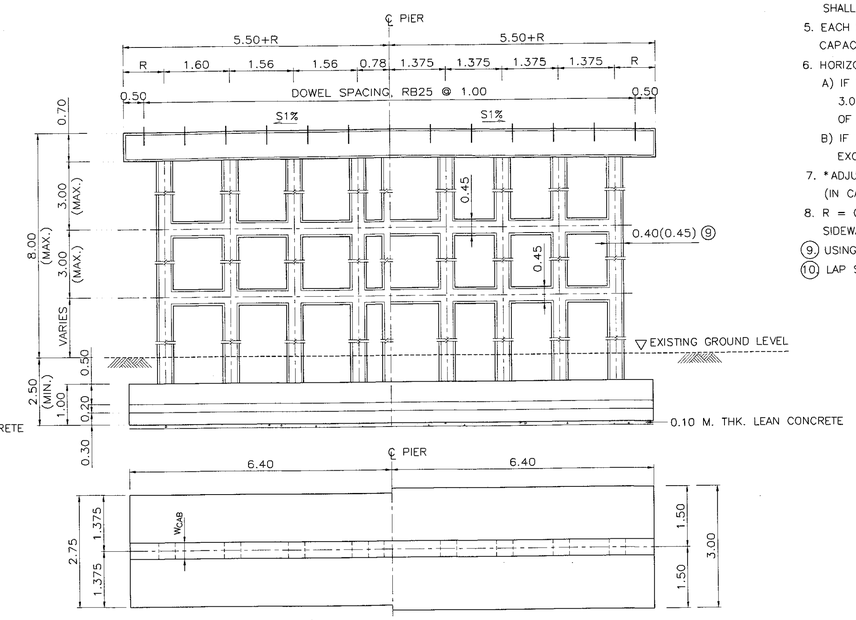

(9.00–10.00 M. SPAN) (12.00 M. SPAN)

PIER DETAILS (HALF ELEV. & PLAN)
SCALE 1 : 75

REV.	REVISION	SIGNATURE	DATE
REV.1	REVISION 1/2017		JUN 2017

KINGDOM OF THAILAND
MINISTRY OF TRANSPORT
DEPARTMENT OF HIGHWAYS

STANDARD DRAWING
11.00 M. ROADWAY WIDTH SLAB BRIDGE, 0° SKEW
SPREAD FOOTING PIER DETAIL

DESIGNED : D.O.H. & CONSULTANTS	**CHECKED :** BUREAU OF LOCATION & DESIGN	**DATE :** OCT 2015
SUBMITTED : (DIRECTOR OF LOCATION & DESIGN BUREAU)		**SCALE :** AS SHOWN
APPROVED : (FOR DIRECTOR GENERAL)		**DWG NO.** PB-207
		SHEET NO. 232/R1

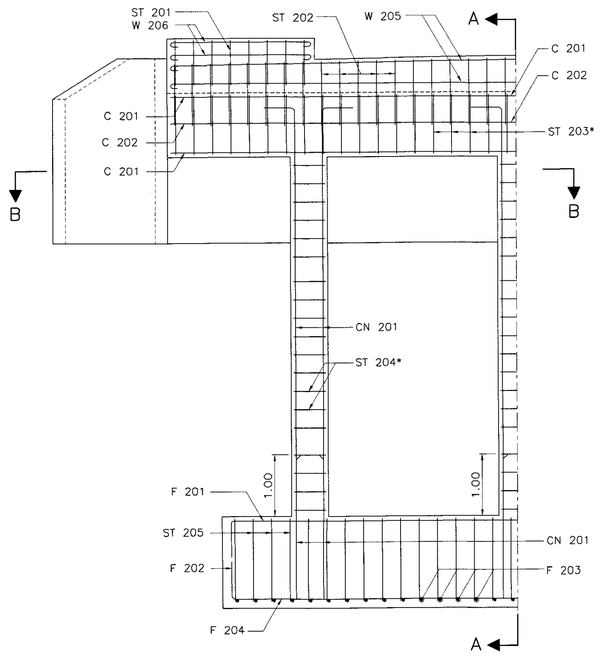

ABUTMENT REINFORCEMENT DETAILS
SCALE 1 : 50

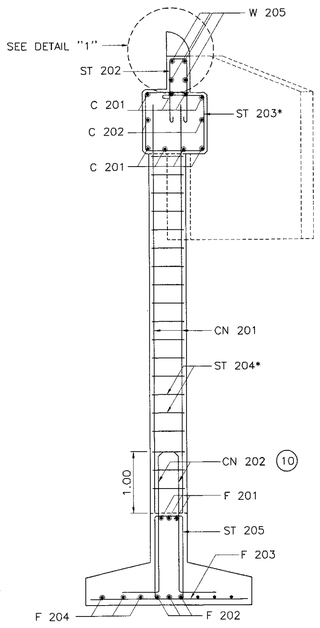

SECTION A – A
SCALE 1 : 50

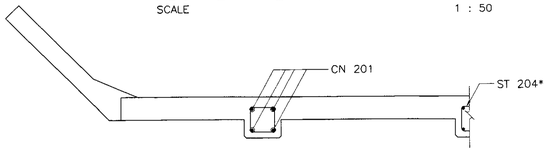

SECTION B – B
SCALE 1 : 50

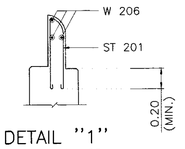

DETAIL "1"
SCALE 1 : 25

TABLE OF REINFORCEMENT								
BAR BENDING DIAGRAMS	No.	BAR MARK	SPAN 5.00 M. REINF.	SPAN 6.00 M. REINF.	SPAN 7.00 M. REINF.	SPAN 8.00 M. REINF.	SPAN 9.00 M. REINF.	SPAN 10.00 MM. REINF.	SPAN 12.00 M. REINF.
	(1)	C 201	8–DB25	8–DB25	8–DB25	8–DB25	8–DB25	8–DB25	8–DB25
	(2)	C 202	2–DB12	2–DB12	2–DB12	2–DB12	2–DB12	2–DB12	2–DB12
	(3)	ST 201	RB9 @ 0.20	RB9 @ 0.20	RB9 @ 0.20	RB9 @ 0.20	RB9 @ 0.20	RB9 @ 0.20	RB9 @ 0.20
	(4)	ST 202	RB9 @ 0.20	RB9 @ 0.20	RB9 @ 0.20	RB9 @ 0.20	RB9 @ 0.20	RB9 @ 0.20	RB9 @ 0.20
	(5)	ST 203	RB9 @ 0.20	RB9 @ 0.20	RB9 @ 0.20	RB9 @ 0.20	RB9 @ 0.20	RB9 @ 0.20	RB9 @ 0.20
	(6)	ST 204	RB9 @ 0.20	RB9 @ 0.20	RB9 @ 0.20	RB9 @ 0.20	RB9 @ 0.20	RB9 @ 0.20	RB9 @ 0.20
	(7)	ST 205	RB9 @ 0.20	RB9 @ 0.20	RB9 @ 0.20	RB9 @ 0.20	RB9 @ 0.20	RB9 @ 0.20	RB9 @ 0.20
	(8)+	CN 201 (LEVEL 1)	4–DB25	4–DB25	4–DB25	4–DB25	4–DB25	4–DB25	4–DB25
		CN 201 (LEVEL 2)	8–DB25	8–DB25	8–DB25	8–DB25	8–DB25	8–DB25	8–DB25
	(9)+	CN 202	4–DB25	4–DB25	4–DB25	4–DB25	4–DB25	4–DB25	4–DB25
	(10)	F 201	3–DB25	3–DB25	3–DB25	3–DB25	3–DB25	3–DB25	3–DB25
	(11)	F 202	3–DB25	3–DB25	3–DB25	3–DB25	3–DB25	3–DB25	3–DB25
	(12)	F 203	DB25 @ 0.25	DB25 @ 0.25	DB25 @ 0.25	DB25 @ 0.25	DB25 @ 0.25	DB25 @ 0.25	DB25 @ 0.25
	(13)	F 204	6–DB25	6–DB25	6–DB25	6–DB25	6–DB25	6–DB25	6–DB25
	(14)	W 205	4–DB12	4–DB12	4–DB12	4–DB12	4–DB12	4–DB12	4–DB12
	(15)	W 206	3–DB12	3–DB12	3–DB12	3–DB12	3–DB12	3–DB12	3–DB12

REMARK : IF THE DISTANCE BETWEEN THE CENTERLINE OF THE BRACING TO THE EXISTING GROUND LEVEL OF ABUTMENT EXCEED 4.00 M., OTHER TYPE OF ABUTMENT AS DWG. NO. PB–310 SHALL BE USED, (8)+(9)+ REINFORCEMENT NUMBERS OF CN 201 AND CN 202 ARE SHOWN PER COLUMN RELEVANT TO SEISMIC LEVEL 1 (1A OR 1B) AND 2.

NOTES :

1. ALL DIMENSIONS SHOWN ARE IN METERS UNLESS OTHERWISE INDICATED.
2. DESIGN LIVE LOAD : HL–93
3. A MINIMUM ULTIMATE COMPRESSIVE STRENGTH FOR A 150x150x150 MM. CUBE AT 28 DAYS AS FOLLOWS:
   A) FOR ABUTMENT AND WINGWALL 35 MPa. (357 KG/CM^2)
   B) FOR FOOTING 35 MPa. (357 KG/CM^2)
   C) FOR SIDEWALK AND BARRIER 35 MPa. (357 KG/CM^2)
4. REBAR SIZES SMALLER THAN 12 MM. SHALL BE TIS 20 GRADE SR 24 PLAIN ROUND BARS, OTHERS SHALL BE TIS 24 GRADE SD 40 DEFORMED BARS UNLESS OTHERWISE INDICATED.
5. EACH SPREAD FOOTING SHALL BE LOCATED BELOW TO A DEPTH WHERE SCOUR WILL NOT AFFECT CAPACITY, THE MINIMUM ALLOWABLE BEARING CAPACITY OF 0.20 MPa (20 TON/M^2)
6. HORIZONTAL CROSS BRACING BETWEEN COLUMNS OF PILE BENT SHALL BE PROVIDED AS FOLLOWS:
   A) IF THE DISTANCE FROM EXISTING GROUND LEVEL TO THE BOTTOM OF THE CAP BEAM EXCEED 3.00 M., A BRACING SHALL BE PLACED IN SUCH A WAY THAT THE DISTANCE FROM THE BOTTOM OF THE CAP BEAM TO THE CENTERLINE OF THE BRACING IS NOT MORE THAN 3.00 M.
   B) IF THE DISTANCE BETWEEN THE CENTERLINE OF THE BRACING TO THE EXISTING GROUND LEVEL EXCEED 3.00 M., ADDITIONAL BRACINGS SHALL BE PROVIDED AT AN INTERVAL NOT MORE THAN 3.00 M.
7. R = 0.50 M. FOR THE BRIDGE WITHOUT SIDEWALK (P = 0.00). FOR THE BRIDGE WITH SIDEWALK OF P = 0.50 AND 1.00, R = 0.50 M. AND 1.00 M., RESPECTIVELY.
8. * ADJUST SPACING OF STEEL REINFORCEMENT IN TABLE BY @ 0.10 (TYP.) TO RESIST EARTHQUAKE FORCE. (IN CASE OF BRIDGE LOCATED IN SEISMIC LEVEL 1B AND 2)

(9) USING 0.45 WHEN PILE BENT AND BEAM ARE IN SALTWATER

(10) LAP SPLICE OF MAIN REINFORCING BAR IS NOT PERMITTED FOR SEISMIC LEVEL 1B AND 2

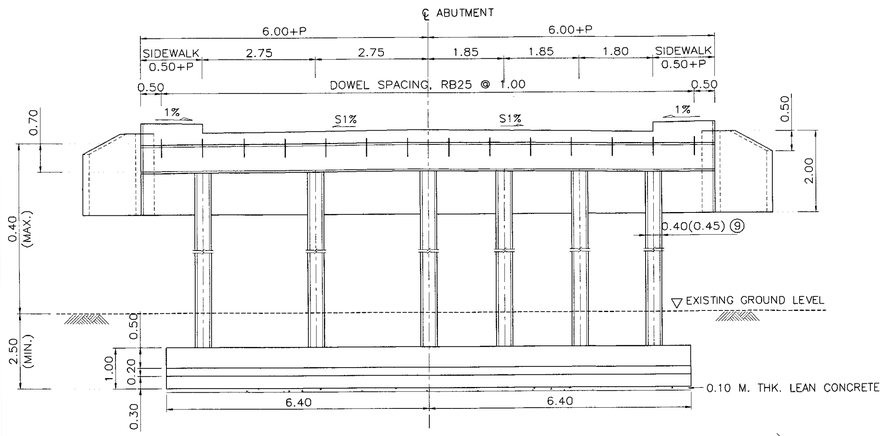

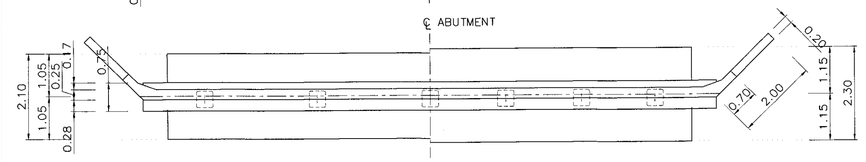

(5.00–6.00 M. SPAN) (7.00–8.00 M. SPAN)

ABUTMENT DETAILS (HALF ELEV. & PLAN)
SCALE 1 : 75

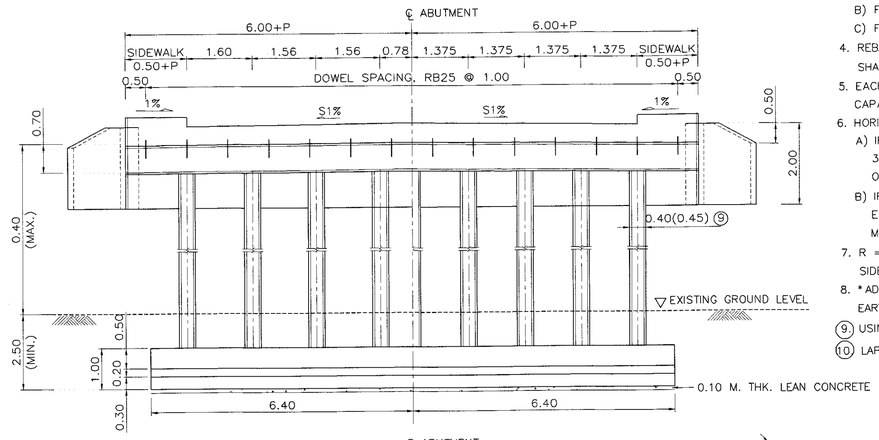

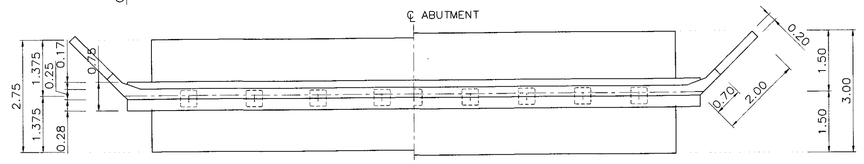

(9.00–10.00 M. SPAN) (12.00 M. SPAN)

ABUTMENT DETAILS (HALF ELEV. & PLAN)
SCALE 1 : 75

REV.	REVISION	SIGNATURE	DATE
REV.1	REVISION 1/2017		JUN 2017

KINGDOM OF THAILAND

MINISTRY OF TRANSPORT
DEPARTMENT OF HIGHWAYS

STANDARD DRAWING

11.00 M. ROADWAY WIDTH SLAB BRIDGE, 0° SKEW
SPREAD FOOTING ABUTMENT DETAIL

DESIGNED : D.O.H. & CONSULTANTS	**CHECKED :** BUREAU OF LOCATION & DESIGN	**DATE :** OCT 2015
SUBMITTED : (DIRECTOR OF LOCATION & DESIGN BUREAU)		**SCALE :** AS SHOWN
APPROVED : (FOR DIRECTOR GENERAL)		**DWG NO.** PB–208
		SHEET NO. 233/RI

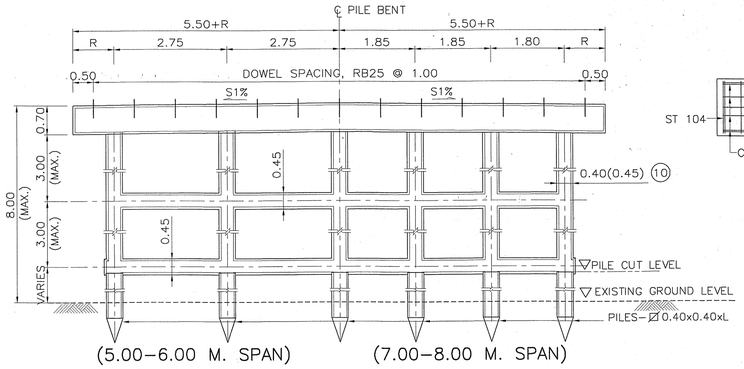

(5.00–6.00 M. SPAN) (7.00–8.00 M. SPAN)

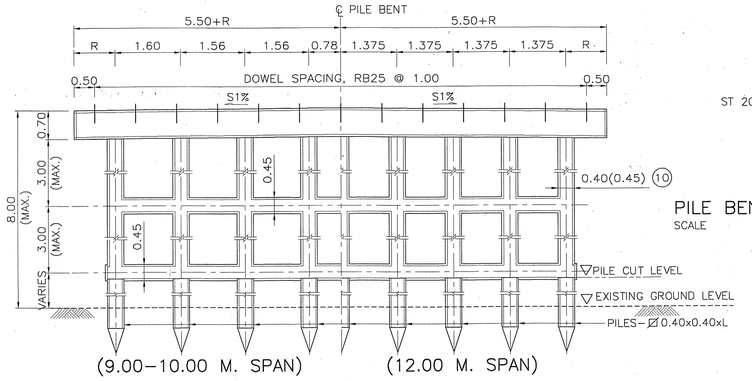

(9.00–10.00 M. SPAN) (12.00 M. SPAN)

PILE BENT DETAILS (HALF ELEV.)
SCALE 1 : 75

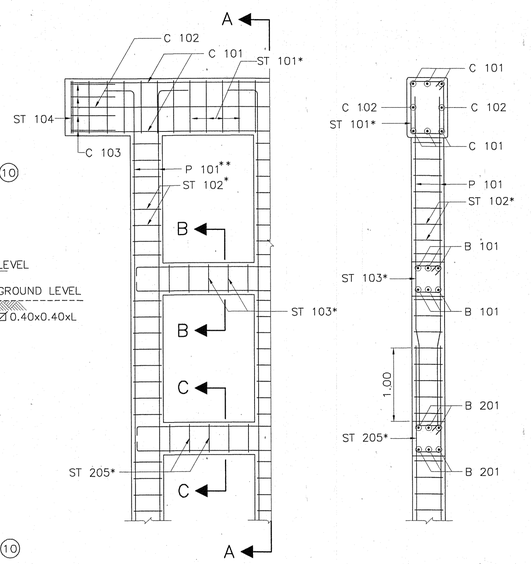

PILE BENT REINFORCEMENT DETAIL
SCALE 1 : 50

SECTION A – A
SCALE 1 : 50

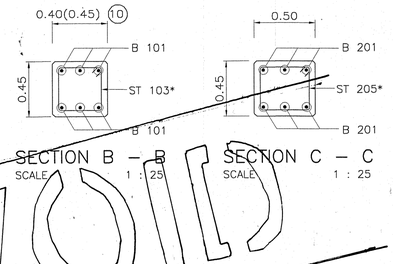

SECTION B – B
SCALE 1 : 25

SECTION C – C
SCALE 1 : 25

VOID

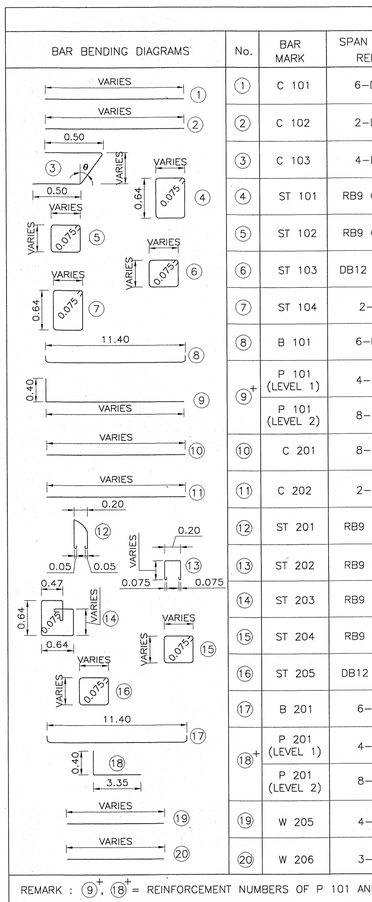

TABLE OF REINFORCEMENT

No.	BAR MARK	SPAN 5.00 M. REINF.	SPAN 6.00 M. REINF.	SPAN 7.00 M. REINF.	SPAN 8.00 M. REINF.	SPAN 9.00 M. REINF.	SPAN 10.00 M. REINF.	SPAN 12.00 M. REINF.
①	C 101	6–DB25	6–DB25	6–DB25	6–DB25	6–DB25	6–DB25	6–DB25
②	C 102	2–DB12	2–DB12	2–DB12	2–DB12	2–DB12	2–DB12	2–DB12
③	C 103	4–DB12	4–DB12	4–DB12	4–DB12	4–DB12	4–DB12	4–DB12
④	ST 101	RB9 @ 0.20	RB9 @ 0.20	RB9 @ 0.20	RB9 @ 0.20	RB9 @ 0.20	RB9 @ 0.20	RB9 @ 0.20
⑤	ST 102	RB9 @ 0.20	RB9 @ 0.20	RB9 @ 0.20	RB9 @ 0.20	RB9 @ 0.20	RB9 @ 0.20	RB9 @ 0.20
⑥	ST 103	DB12 @ 0.20	DB12 @ 0.20	DB12 @ 0.20	DB12 @ 0.20	DB12 @ 0.20	DB12 @ 0.20	DB12 @ 0.20
⑦	ST 104	2–RB9	2–RB9	2–RB9	2–RB9	2–RB9	2–RB9	2–RB9
⑧	B 101	6–DB25	6–DB25	6–DB25	6–DB25	6–DB25	6–DB25	6–DB25
⑨+	P 101 (LEVEL 1)	4–DB25	4–DB25	4–DB25	4–DB25	4–DB25	4–DB25	4–DB25
	P 101 (LEVEL 2)	8–DB25	8–DB25	8–DB25	8–DB25	8–DB25	8–DB25	8–DB25
⑩	C 201	8–DB25	8–DB25	8–DB25	8–DB25	8–DB25	8–DB25	8–DB25
⑪	C 202	2–DB12	2–DB12	2–DB12	2–DB12	2–DB12	2–DB12	2–DB12
⑫	ST 201	RB9 @ 0.20	RB9 @ 0.20	RB9 @ 0.20	RB9 @ 0.20	RB9 @ 0.20	RB9 @ 0.20	RB9 @ 0.20
⑬	ST 202	RB9 @ 0.20	RB9 @ 0.20	RB9 @ 0.20	RB9 @ 0.20	RB9 @ 0.20	RB9 @ 0.20	RB9 @ 0.20
⑭	ST 203	RB9 @ 0.20	RB9 @ 0.20	RB9 @ 0.20	RB9 @ 0.20	RB9 @ 0.20	RB9 @ 0.20	RB9 @ 0.20
⑮	ST 204	RB9 @ 0.20	RB9 @ 0.20	RB9 @ 0.20	RB9 @ 0.20	RB9 @ 0.20	RB9 @ 0.20	RB9 @ 0.20
⑯	ST 205	DB12 @ 0.20	DB12 @ 0.20	DB12 @ 0.20	DB12 @ 0.20	DB12 @ 0.20	DB12 @ 0.20	DB12 @ 0.20
⑰	B 201	6–DB25	6–DB25	6–DB25	6–DB25	6–DB25	6–DB25	6–DB25
⑱+	P 201 (LEVEL 1)	4–DB25	4–DB25	4–DB25	4–DB25	4–DB25	4–DB25	4–DB25
	P 201 (LEVEL 2)	8–DB25	8–DB25	8–DB25	8–DB25	8–DB25	8–DB25	8–DB25
⑲	W 205	4–DB12	4–DB12	4–DB12	4–DB12	4–DB12	4–DB12	4–DB12
⑳	W 206	3–DB12	3–DB12	3–DB12	3–DB12	3–DB12	3–DB12	3–DB12

REMARK : ⑨+, ⑱+ = REINFORCEMENT NUMBERS OF P 101 AND P 201 ARE SHOWN PER COLUMN RELEVANT TO SEISMIC LEVEL 1 (1A OR 1B) AND 2

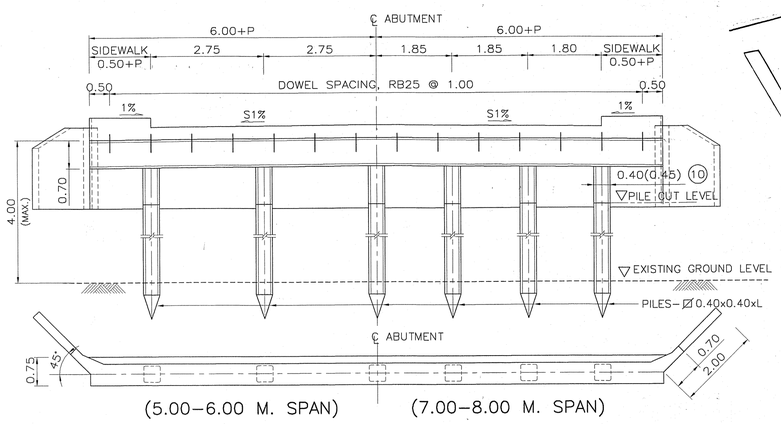

(5.00–6.00 M. SPAN) (7.00–8.00 M. SPAN)

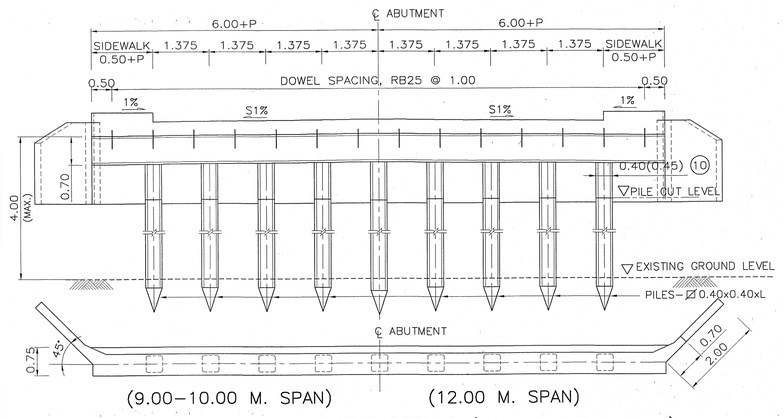

(9.00–10.00 M. SPAN) (12.00 M. SPAN)

ABUTMENT DETAILS (HALF ELEV. & PLAN)
SCALE 1 : 75

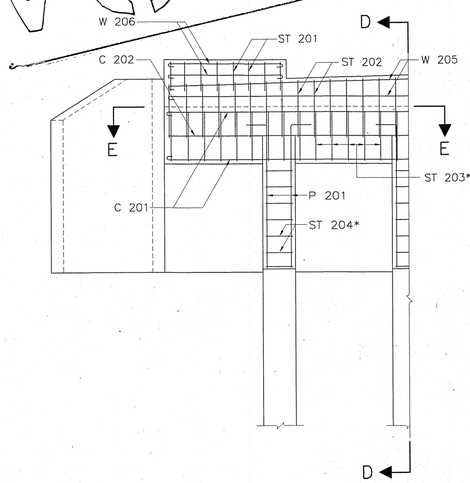

ABUTMENT REINFORCEMENT
SCALE 1 : 50

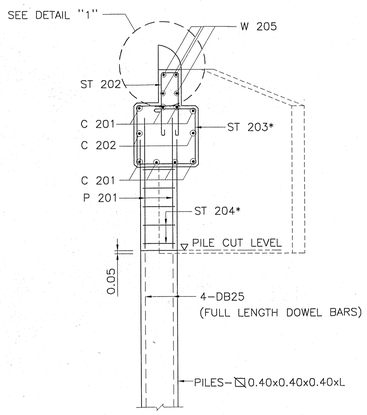

SECTION D – D
SCALE 1 : 50

NOTES :

1. ALL DIMENSIONS SHOWN ARE IN METERS UNLESS OTHERWISE INDICATED.
2. DESIGN LIVE LOAD : HL–93
3. A MINIMUM ULTIMATE COMPRESSIVE STRENGTH FOR A 150x150x150 MM. CUBE AT 28 DAYS AS FOLLOWS:
   A) FOR PILE BENT/CAP BEAM 35 MPa. (357 KG/CM^2)
   B) FOR ABUTMENT/R.C. DRIVEN PILE 35 MPa. (357 KG/CM^2)
   C) FOR PRECAST DRIVEN PILE 45 MPa. (459 KG/CM^2)
   D) FOR SIDEWALK AND BARRIER 35 MPa. (357 KG/CM^2)
4. REBAR SIZES SMALLER THAN 12 MM. SHALL BE TIS 20 GRADE SR 24 PLAIN ROUND BARS, OTHERS SHALL BE TIS 24 GRADE SD 40 DEFORMED BARS UNLESS OTHERWISE INDICATED.
5. EACH PILE SHALL BE DRIVEN TO A DEPTH WHERE SCOUR WILL NOT AFFECT CAPACITY, THE MINIMUM ALLOWABLE CAPACITY OF 0.50 MN (50 TON) FOR EACH PILE AND A MINIMUM 3.50 M. EMBEDED LENGTH UNDER A DEPTH ARE REQUIRED
6. HORIZONTAL CROSS BRACING BETWEEN COLUMNS OF PILE BENT SHALL BE PROVIDED AS FOLLOWS:
   A) IF THE DISTANCE FROM EXISTING GROUND LEVEL TO THE BOTTOM OF THE CAP BEAM EXCEED 3.00 M., A BRACING SHALL BE PLACED IN SUCH A WAY THAT THE DISTANCE FROM THE BOTTOM OF THE CAP BEAM TO THE CENTERLINE OF THE BRACING IS NOT MORE THAN 3.00 M.
   B) IF THE DISTANCE BETWEEN THE CENTERLINE OF THE BRACING TO THE EXISTING GROUND LEVEL EXCEED 3.00 M., ADDITIONAL BRACINGS SHALL BE PROVIDED AT AN INTERVAL NOT MORE THAN 3.00 M.
7. *ADJUST SPACING OF STEEL REINFORCEMENT IN TABLE BY @ 0.10 (TYP.) TO RESIST EARTHQUAKE FORCE. (IN CASE OF BRIDGE LOCATED IN SEISMIC LEVEL 1B AND 2)
8. IF THE DISTANCE BETWEEN THE CENTERLINE OF THE BRACING TO THE EXISTING GROUND LEVEL OF ABUTMENT EXCEED 4.00 M., OTHER TYPE OF ABUTMENT AS DWG. NO. PB–309 SHALL BE USED.
9. R = 0.50 M. FOR THE BRIDGE WITHOUT SIDEWALK (P = 0.00). FOR THE BRIDGE WITH SIDEWALK OF P = 0.50 AND 1.00, R = 0.50 M. AND 1.00 M., RESPECTIVELY.

⑩ USING 0.45 WHEN PILE BENT AND BEAM ARE IN SALTWATER

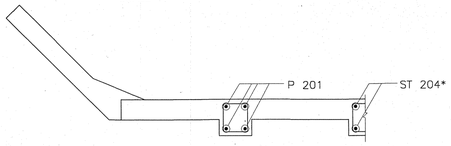

SECTION E – E
SCALE 1 : 50

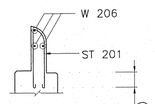

DETAIL "1"
SCALE 1 : 50

KINGDOM OF THAILAND

MINISTRY OF TRANSPORT
DEPARTMENT OF HIGHWAYS

STANDARD DRAWING

11.00 M. ROADWAY WIDTH SLAB BRIDGE, 0° SKEW

PILE BENT AND ABUTMENT DETAILS

DESIGNED : D.O.H. & CONSULTANTS	**CHECKED :** BUREAU OF LOCATION & DESIGN	**DATE :** OCT 2015	
SUBMITTED : (DIRECTOR OF LOCATION & DESIGN BUREAU)		**SCALE :** AS SHOWN	
APPROVED : (FOR DIRECTOR GENERAL)		**DWG NO.** PB–209	
		SHEET NO. 234/RI	

REV.	REVISION	SIGNATURE	DATE
REV.1	REVISION 1/2017		JUN 2017

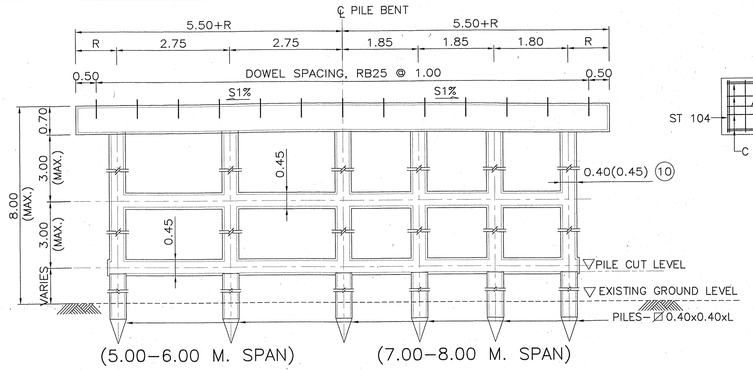

(5.00–6.00 M. SPAN) (7.00–8.00 M. SPAN)

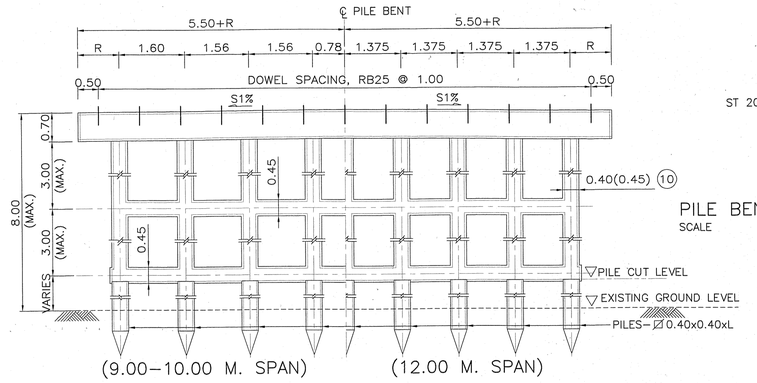

(9.00–10.00 M. SPAN) (12.00 M. SPAN)

PILE BENT DETAILS (HALF ELEV.)
SCALE 1 : 75

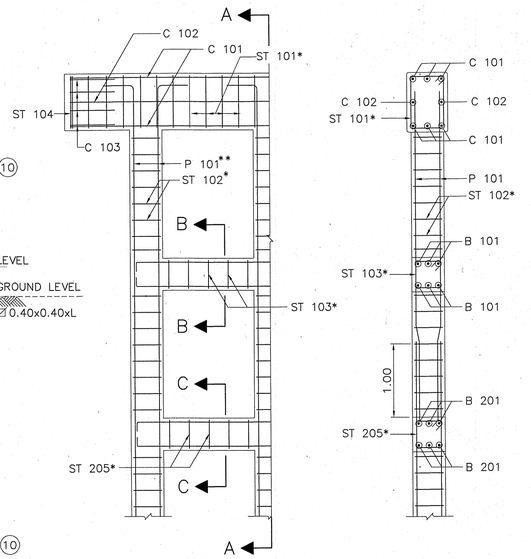

PILE BENT REINFORCEMENT DETAIL
SCALE 1 : 50

SECTION A – A
SCALE 1 : 50

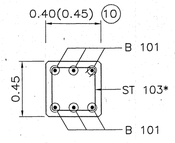

SECTION B – B
SCALE 1 : 25

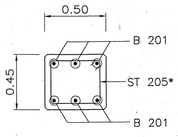

SECTION C – C
SCALE 1 : 25

BAR BENDING DIAGRAMS	No.	BAR MARK	SPAN 5.00 M. REINF.	SPAN 6.00 M. REINF.	SPAN 7.00 M. REINF.	SPAN 8.00 M. REINF.	SPAN 9.00 M. REINF.	SPAN 10.00 M. REINF.	SPAN 12.00 M. REINF.
	①	C 101	6–DB25	6–DB25	6–DB25	6–DB25	6–DB25	6–DB25	6–DB25
	②	C 102	2–DB12	2–DB12	2–DB12	2–DB12	2–DB12	2–DB12	2–DB12
	③	C 103	4–DB12	4–DB12	4–DB12	4–DB12	4–DB12	4–DB12	4–DB12
	④	ST 101	RB9 @ 0.20	RB9 @ 0.20	RB9 @ 0.20	RB9 @ 0.20	RB9 @ 0.20	RB9 @ 0.20	RB9 @ 0.20
	⑤	ST 102	RB9 @ 0.20	RB9 @ 0.20	RB9 @ 0.20	RB9 @ 0.20	RB9 @ 0.20	RB9 @ 0.20	RB9 @ 0.20
	⑥	ST 103	DB12 @ 0.20	DB12 @ 0.20	DB12 @ 0.20	DB12 @ 0.20	DB12 @ 0.20	DB12 @ 0.20	DB12 @ 0.20
	⑦	ST 104	2–RB9	2–RB9	2–RB9	2–RB9	2–RB9	2–RB9	2–RB9
	⑧	B 101	6–DB25	6–DB25	6–DB25	6–DB25	6–DB25	6–DB25	6–DB25
	⑨+	P 101 (LEVEL 1)	4–DB25	4–DB25	4–DB25	4–DB25	4–DB25	4–DB25	4–DB25
		P 101 (LEVEL 2)	8–DB25	8–DB25	8–DB25	8–DB25	8–DB25	8–DB25	8–DB25
	⑩	C 201	8–DB25	8–DB25	8–DB25	8–DB25	8–DB25	8–DB25	8–DB25
	⑪	C 202	2–DB12	2–DB12	2–DB12	2–DB12	2–DB12	2–DB12	2–DB12
	⑫	ST 201	RB9 @ 0.20	RB9 @ 0.20	RB9 @ 0.20	RB9 @ 0.20	RB9 @ 0.20	RB9 @ 0.20	RB9 @ 0.20
	⑬	ST 202	RB9 @ 0.20	RB9 @ 0.20	RB9 @ 0.20	RB9 @ 0.20	RB9 @ 0.20	RB9 @ 0.20	RB9 @ 0.20
	⑭	ST 203	RB9 @ 0.20	RB9 @ 0.20	RB9 @ 0.20	RB9 @ 0.20	RB9 @ 0.20	RB9 @ 0.20	RB9 @ 0.20
	⑮	ST 204	RB9 @ 0.20	RB9 @ 0.20	RB9 @ 0.20	RB9 @ 0.20	RB9 @ 0.20	RB9 @ 0.20	RB9 @ 0.20
	⑯	ST 205	DB12 @ 0.20	DB12 @ 0.20	DB12 @ 0.20	DB12 @ 0.20	DB12 @ 0.20	DB12 @ 0.20	DB12 @ 0.20
	⑰	B 201	6–DB25	6–DB25	6–DB25	6–DB25	6–DB25	6–DB25	6–DB25
	⑱+	P 201 (LEVEL 1)	4–DB25	4–DB25	4–DB25	4–DB25	4–DB25	4–DB25	4–DB25
		P 201 (LEVEL 2)	8–DB25	8–DB25	8–DB25	8–DB25	8–DB25	8–DB25	8–DB25
	⑲	W 205	4–DB12	4–DB12	4–DB12	4–DB12	4–DB12	4–DB12	4–DB12
	⑳	W 206	3–DB12	3–DB12	3–DB12	3–DB12	3–DB12	3–DB12	3–DB12

TABLE OF REINFORCEMENT

REMARK : ⑨+, ⑱+ = REINFORCEMENT NUMBERS OF P 101 AND P 201 ARE SHOWN PER COLUMN RELEVANT TO SEISMIC LEVEL 1 (1A OR 1B) AND 2

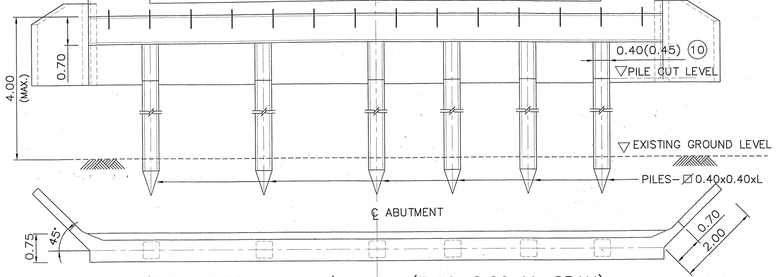

(5.00–6.00 M. SPAN) (7.00–8.00 M. SPAN)

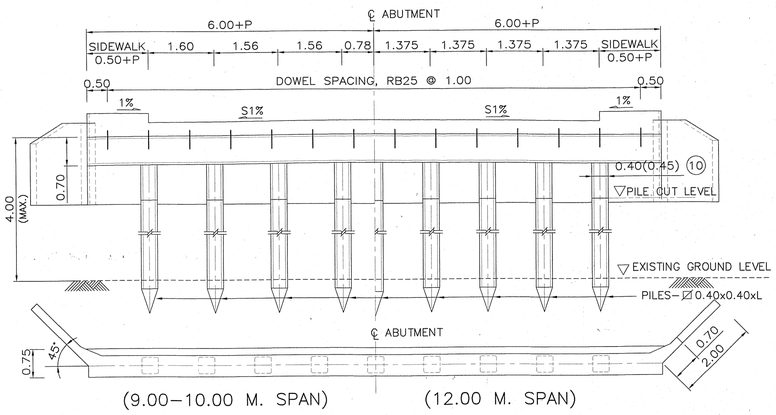

(9.00–10.00 M. SPAN) (12.00 M. SPAN)

ABUTMENT DETAILS (HALF ELEV. & PLAN)
SCALE 1 : 75

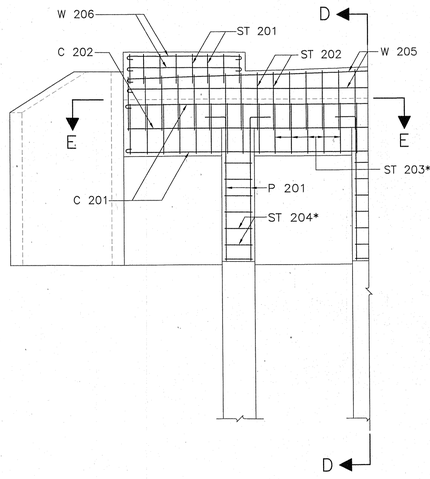

ABUTMENT REINFORCEMENT
SCALE 1 : 50

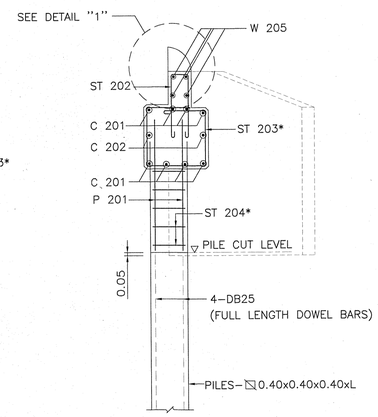

SECTION D – D
SCALE 1 : 50

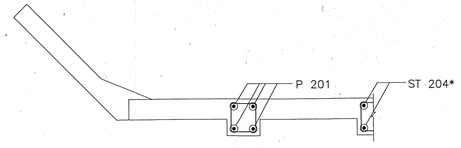

SECTION E – E
SCALE 1 : 50

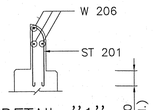

DETAIL "1"
SCALE 1 : 50

NOTES :

1. ALL DIMENSIONS SHOWN ARE IN METERS UNLESS OTHERWISE INDICATED.
2. DESIGN LIVE LOAD : HL–93
3. A MINIMUM ULTIMATE COMPRESSIVE STRENGTH FOR A 150x150x150 MM. CUBE AT 28 DAYS AS FOLLOWS:
   A) FOR PILE BENT/CAP BEAM 35 MPa. (357 KG/CM^2)
   B) FOR ABUTMENT/R.C. DRIVEN PILE 35 MPa. (357 KG/CM^2)
   C) FOR PRECAST DRIVEN PILE 45 MPa. (459 KG/CM^2)
   D) FOR SIDEWALK AND BARRIER 35 MPa. (357 KG/CM^2)
4. REBAR SIZES SMALLER THAN 12 MM. SHALL BE TIS 20 GRADE SR 24 PLAIN ROUND BARS, OTHERS SHALL BE TIS 24 GRADE SD 40 DEFORMED BARS UNLESS OTHERWISE INDICATED.
5. EACH PILE SHALL BE DRIVEN TO A DEPTH WHERE SCOUR WILL NOT AFFECT CAPACITY, THE MINIMUM ALLOWABLE CAPACITY OF 0.50 MN (50 TON) FOR EACH PILE AND A MINIMUM 3.50 M. EMBEDED LENGTH UNDER A DEPTH ARE REQUIRED
6. HORIZONTAL CROSS BRACING BETWEEN COLUMNS OF PILE BENT SHALL BE PROVIDED AS FOLLOWS:
   A) IF THE DISTANCE FROM EXISTING GROUND LEVEL TO THE BOTTOM OF THE CAP BEAM EXCEED 3.00 M., A BRACING SHALL BE PLACED IN SUCH A WAY THAT THE DISTANCE FROM THE BOTTOM OF THE CAP BEAM TO THE CENTERLINE OF THE BRACING IS NOT MORE THAN 3.00 M.
   B) IF THE DISTANCE BETWEEN THE CENTERLINE OF THE BRACING TO THE EXISTING GROUND LEVEL EXCEED 3.00 M., ADDITIONAL BRACINGS SHALL BE PROVIDED AT AN INTERVAL NOT MORE THAN 3.00 M.
7. *ADJUST SPACING OF STEEL REINFORCEMENT IN TABLE BY @ 0.10 (TYP.) TO RESIST EARTHQUAKE FORCE. (IN CASE OF BRIDGE LOCATED IN SEISMIC LEVEL 1B AND 2)
8. IF THE DISTANCE BETWEEN THE CENTERLINE OF THE BRACING TO THE EXISTING GROUND LEVEL OF ABUTMENT EXCEED 4.00 M., OTHER TYPE OF ABUTMENT AS DWG. NO. PB–309 SHALL BE USED.
9. R = 0.50 M. FOR THE BRIDGE WITHOUT SIDEWALK (P = 0.00). FOR THE BRIDGE WITH SIDEWALK OF P = 0.50 AND 1.00, R = 0.50 M. AND 1.00 M., RESPECTIVELY.
10. USING 0.45 WHEN PILE BENT AND BEAM ARE IN SALTWATER

KINGDOM OF THAILAND

MINISTRY OF TRANSPORT
DEPARTMENT OF HIGHWAYS

STANDARD DRAWING

11.00 M. ROADWAY WIDTH SLAB BRIDGE, 0° SKEW
PILE BENT AND ABUTMENT DETAILS

DESIGNED : D.O.H. & CONSULTANTS	**CHECKED :** BUREAU OF LOCATION & DESIGN	**DATE :** OCT 2015	
SUBMITTED : (DIRECTOR OF LOCATION & DESIGN BUREAU)		**SCALE :** AS SHOWN	
APPROVED : (FOR DIRECTOR GENERAL)		**DWG NO.** PB–209	
		SHEET NO. 234/R2	

REV.	REVISION	SIGNATURE	DATE
REV.2	REVISION 2/2019		DEC 2019
REV.1	REVISION 1/2017		JUN 2017

D:\DOH\2-แบบมาตรฐาน กรมทางหลวง\1-STANDARD FINAL-1-CAD(ENG)_2015\6_แบบมาตรฐานสะพาน\PB-209(REV02)

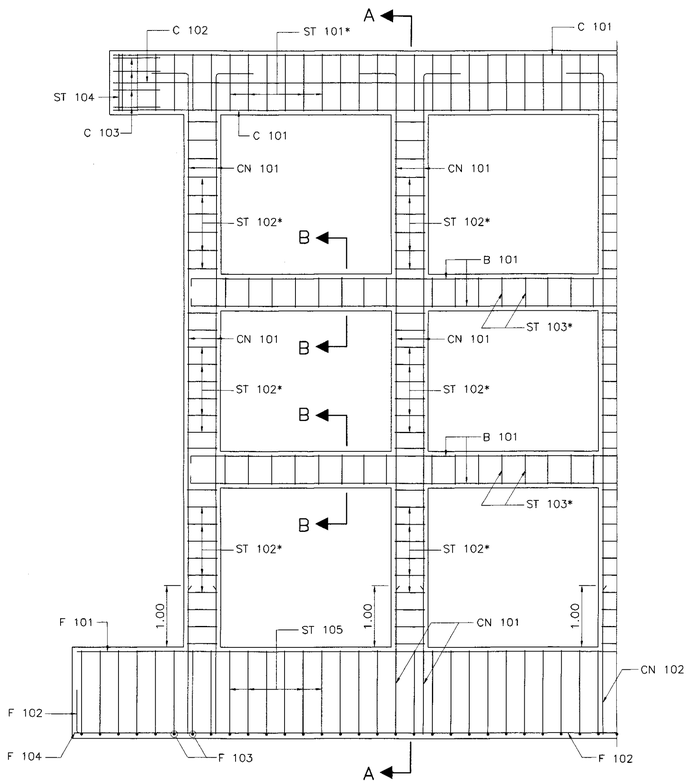

PIER REINFORCEMENT DETAILS
SCALE 1 : 50

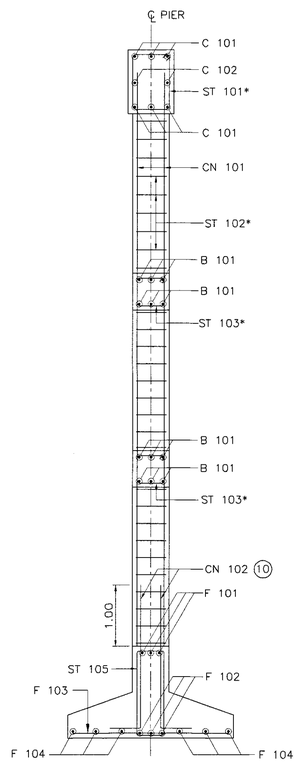

SECTION A – A
SCALE 1 : 50

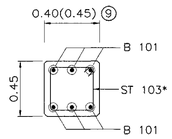

SECTION B – B
SCALE 1 : 25

TABLE OF REINFORCEMENT

BAR BENDING DIAGRAMS	No.	BAR MARK	SPAN 5.00 M. REINF.	SPAN 6.00 M. REINF.	SPAN 7.00 M. REINF.	SPAN 8.00 M. REINF.	SPAN 9.00 M. REINF.	SPAN 10.00 M. REINF.	SPAN 12.00 M. REINF.
	(1)	C 101	6–DB25	6–DB25	6–DB25	6–DB25	6–DB25	6–DB25	6–DB25
	(2)	C 102	2–DB12	2–DB12	2–DB12	2–DB12	2–DB12	2–DB12	2–DB12
	(3)	C 103	4–DB12	4–DB12	4–DB12	4–DB12	4–DB12	4–DB12	4–DB12
	(4)+	CN 101 (LEVEL 1)	4–DB25	4–DB25	4–DB25	4–DB25	4–DB25	4–DB25	4–DB25
		CN 101 (LEVEL 2)	8–DB25	8–DB25	8–DB25	8–DB25	8–DB25	8–DB25	8–DB25
	(5)+	CN 102	4–DB25	4–DB25	4–DB25	4–DB25	4–DB25	4–DB25	4–DB25
	(6)	ST 101	RB9 @ 0.20	RB9 @ 0.20	RB9 @ 0.20	RB9 @ 0.20	RB9 @ 0.20	RB9 @ 0.20	RB9 @ 0.20
	(7)	ST 102	RB9 @ 0.20	RB9 @ 0.20	RB9 @ 0.20	RB9 @ 0.20	RB9 @ 0.20	RB9 @ 0.20	RB9 @ 0.20
	(8)	ST 103	DB12 @ 0.20	DB12 @ 0.20	DB12 @ 0.20	DB12 @ 0.20	DB12 @ 0.20	DB12 @ 0.20	DB12 @ 0.20
	(9)	ST 104	2–RB9	2–RB9	2–RB9	2–RB9	2–RB9	2–RB9	2–RB9
	(10)	ST 105	RB9 @ 0.20	RB9 @ 0.20	RB9 @ 0.20	RB9 @ 0.20	RB9 @ 0.20	RB9 @ 0.20	RB9 @ 0.20
	(11)	B 101	6–DB25	6–DB25	6–DB25	6–DB25	6–DB25	6–DB25	6–DB25
	(12)	F 101	3–DB25	3–DB25	3–DB25	3–DB25	3–DB25	3–DB25	3–DB25
	(13)	F 102	3–DB25	3–DB25	3–DB25	3–DB25	3–DB25	3–DB25	3–DB25
	(14)	F 103	DB25 @ 0.25	DB25 @ 0.25	DB25 @ 0.25	DB25 @ 0.25	DB25 @ 0.25	DB25 @ 0.25	DB25 @ 0.25
	(15)	F 104	6–DB25	6–DB25	6–DB25	6–DB25	6–DB25	6–DB25	6–DB25

REMARK : (4)+,(5)+ = REINFORCEMENT NUMBERS OF CN 101 AND CN 102 ARE SHOWN PER COLUMN RELEVANT TO SEISMIC LEVEL 1 (1A OR 1B) AND 2

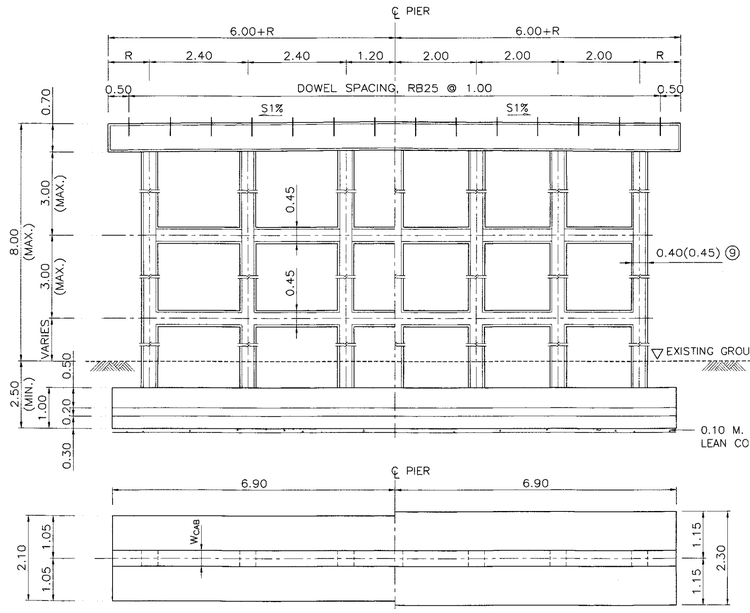

(5.00–6.00 M. SPAN) (7.00–8.00 M. SPAN)

PIER DETAILS (HALF ELEV. & PLAN)
SCALE 1 : 75

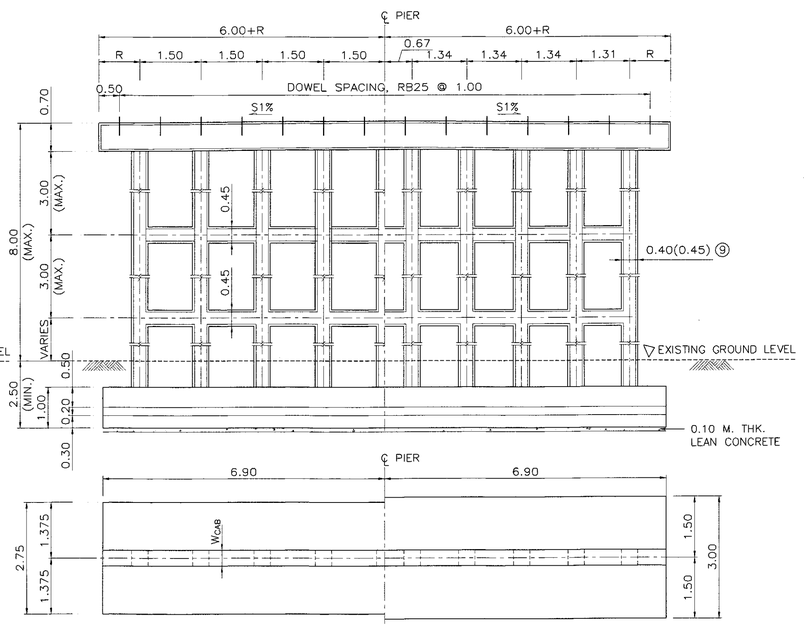

(9.00–10.00 M. SPAN) (12.00 M. SPAN)

PIER DETAILS (HALF ELEV. & PLAN)
SCALE 1 : 75

NOTES :

1. ALL DIMENSIONS SHOWN ARE IN METERS UNLESS OTHERWISE INDICATED.
2. DESIGN LIVE LOAD : HL–93
3. A MINIMUM ULTIMATE COMPRESSIVE STRENGTH FOR A 150x150x150 MM. CUBE AT 28 DAYS AS FOLLOWS:
   A) FOR PILE BENT/CAP BEAM 35 MPa. (357 KG/CM^2)
   B) FOR FOOTING 35 MPa. (357 KG/CM^2)
   C) FOR SIDEWALK AND BARRIER 35 MPa. (357 KG/CM^2)
4. REBAR SIZES SMALLER THAN 12 MM. SHALL BE TIS 20 GRADE SR 24 PLAIN ROUND BARS, OTHERS SHALL BE TIS 24 GRADE SD 40 DEFORMED BARS UNLESS OTHERWISE INDICATED.
5. EACH SPREAD FOOTING SHALL BE LOCATED BELOW TO A DEPTH WHERE SCOUR WILL NOT AFFECT CAPACITY, THE MINIMUM ALLOWABLE BEARING CAPACITY OF 0.20 MPa (20 TON/M^2)
6. HORIZONTAL CROSS BRACING BETWEEN COLUMNS OF PILE BENT SHALL BE PROVIDED AS FOLLOWS:
   A) IF THE DISTANCE FROM EXISTING GROUND LEVEL TO THE BOTTOM OF THE CAP BEAM EXCEED 3.00 M., A BRACING SHALL BE PLACED IN SUCH A WAY THAT THE DISTANCE FROM THE BOTTOM OF THE CAP BEAM TO THE CENTERLINE OF THE BRACING IS NOT MORE THAN 3.00 M.
   B) IF THE DISTANCE BETWEEN THE CENTERLINE OF THE BRACING TO THE EXISTING GROUND LEVEL EXCEED 3.00 M., ADDITIONAL BRACINGS SHALL BE PROVIDED AT AN INTERVAL NOT MORE THAN 3.00 M.
7. *ADJUST SPACING OF STEEL REINFORCEMENT IN TABLE BY @ 0.10 (TYP.) TO RESIST EARTHQUAKE FORCE. (IN CASE OF BRIDGE LOCATED IN SEISMIC LEVEL 1B AND 2)
8. R = 0.50 M. FOR THE BRIDGE WITHOUT SIDEWALK (P = 0.00). FOR THE BRIDGE WITH SIDEWALK OF P = 0.50 AND 1.00, R = 0.50 M. AND 1.00 M., RESPECTIVELY.

(9) USING 0.45 WHEN PILE BENT AND BEAM ARE IN SALTWATER

(10) LAP SPLICE OF MAIN REINFORCING BAR IS NOT PERMITTED FOR SEISMIC LEVEL 1B AND 2

KINGDOM OF THAILAND

MINISTRY OF TRANSPORT
DEPARTMENT OF HIGHWAYS

STANDARD DRAWING

12.00 M. ROADWAY WIDTH SLAB BRIDGE, 0° SKEW

SPREAD FOOTING PIER DETAIL

DESIGNED : D.O.H. & CONSULTANTS	**CHECKED :** BUREAU OF LOCATION & DESIGN	**DATE :** OCT 2015	
SUBMITTED : (DIRECTOR OF LOCATION & DESIGN BUREAU)		**SCALE :** AS SHOWN	
APPROVED : (FOR DIRECTOR GENERAL)		**DWG NO.** PB–210	
		SHEET NO. 235/R1	

REV.	REVISION	SIGNATURE	DATE
REV.1	REVISION 1/2017		JUN 2017

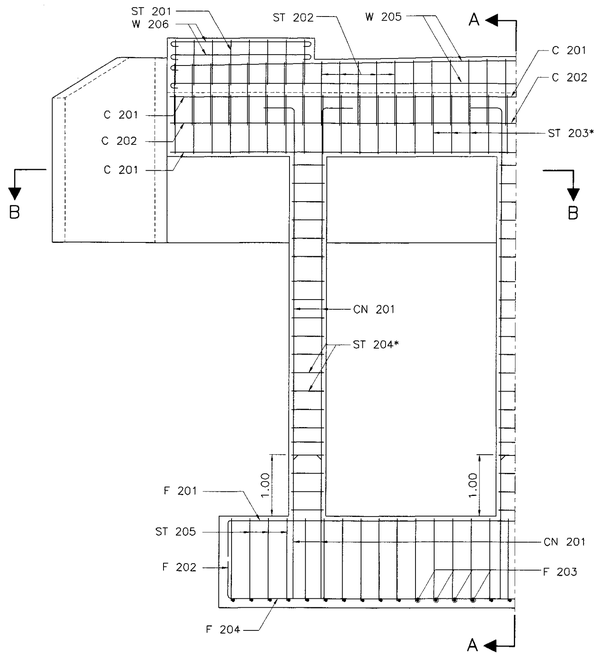

ABUTMENT REINFORCEMENT DETAILS
SCALE 1 : 50

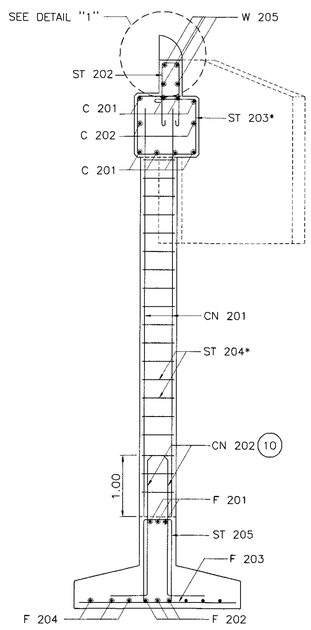

SECTION A – A
SCALE 1 : 50

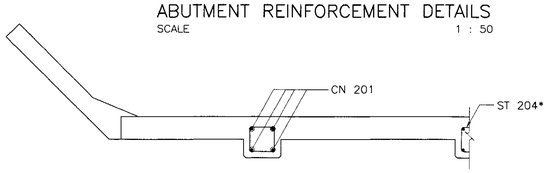

SECTION B – B
SCALE 1 : 50

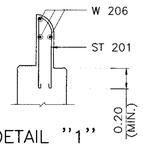

DETAIL "1"
SCALE 1 : 25

TABLE OF REINFORCEMENT								
BAR BENDING DIAGRAMS	No.	BAR MARK	SPAN 5.00 M. REINF.	SPAN 6.00 M. REINF.	SPAN 7.00 M. REINF.	SPAN 8.00 M. REINF.	SPAN 9.00 M. REINF.	SPAN 10.00 MM. REINF.	SPAN 12.00 M. REINF.
	①	C 201	8–DB25	8–DB25	8–DB25	8–DB25	8–DB25	8–DB25	8–DB25
	②	C 202	2–DB12	2–DB12	2–DB12	2–DB12	2–DB12	2–DB12	2–DB12
	③	ST 201	RB9 @ 0.20	RB9 @ 0.20	RB9 @ 0.20	RB9 @ 0.20	RB9 @ 0.20	RB9 @ 0.20	RB9 @ 0.20
	④	ST 202	RB9 @ 0.20	RB9 @ 0.20	RB9 @ 0.20	RB9 @ 0.20	RB9 @ 0.20	RB9 @ 0.20	RB9 @ 0.20
	⑤	ST 203	RB9 @ 0.20	RB9 @ 0.20	RB9 @ 0.20	RB9 @ 0.20	RB9 @ 0.20	RB9 @ 0.20	RB9 @ 0.20
	⑥	ST 204	RB9 @ 0.20	RB9 @ 0.20	RB9 @ 0.20	RB9 @ 0.20	RB9 @ 0.20	RB9 @ 0.20	RB9 @ 0.20
	⑦	ST 205	RB9 @ 0.20	RB9 @ 0.20	RB9 @ 0.20	RB9 @ 0.20	RB9 @ 0.20	RB9 @ 0.20	RB9 @ 0.20
	⑧+	CN 201 (LEVEL 1)	4–DB25	4–DB25	4–DB25	4–DB25	4–DB25	4–DB25	4–DB25
		CN 201 (LEVEL 2)	8–DB25	8–DB25	8–DB25	8–DB25	8–DB25	8–DB25	8–DB25
	⑨+	CN 202	4–DB25	4–DB25	4–DB25	4–DB25	4–DB25	4–DB25	4–DB25
	⑩	F 201	3–DB25	3–DB25	3–DB25	3–DB25	3–DB25	3–DB25	3–DB25
	⑪	F 202	3–DB25	3–DB25	3–DB25	3–DB25	3–DB25	3–DB25	3–DB25
	⑫	F 203	DB25 @ 0.25	DB25 @ 0.25	DB25 @ 0.25	DB25 @ 0.25	DB25 @ 0.25	DB25 @ 0.25	DB25 @ 0.25
	⑬	F 204	6–DB25	6–DB25	6–DB25	6–DB25	6–DB25	6–DB25	6–DB25
	⑭	W 205	4–DB12	4–DB12	4–DB12	4–DB12	4–DB12	4–DB12	4–DB12
	⑮	W 206	3–DB12	3–DB12	3–DB12	3–DB12	3–DB12	3–DB12	3–DB12

REMARK : IF THE DISTANCE BETWEEN THE CENTERLINE OF THE BRACING TO THE EXISTING GROUND LEVEL OF ABUTMENT EXCEED 4.00 M., OTHER TYPE OF ABUTMENT AS DWG. NO. PB–310 SHALL BE USED, ⑧+ ⑨+ REINFORCEMENT NUMBERS OF CN 201 AND CN 202 ARE SHOWN PER COLUMN RELEVANT TO SEISMIC LEVEL 1 (1A OR 1B) AND 2.

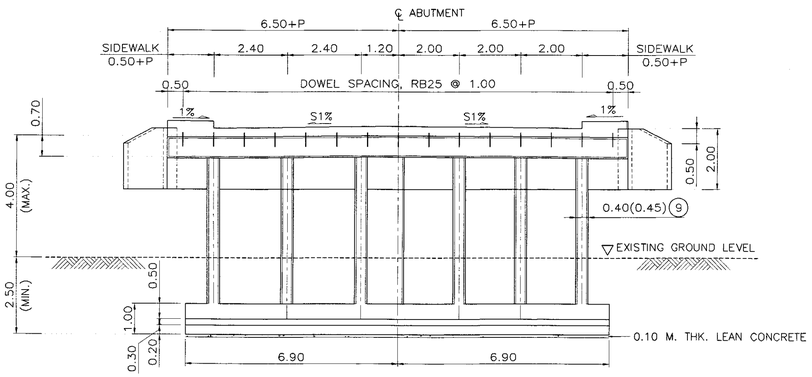

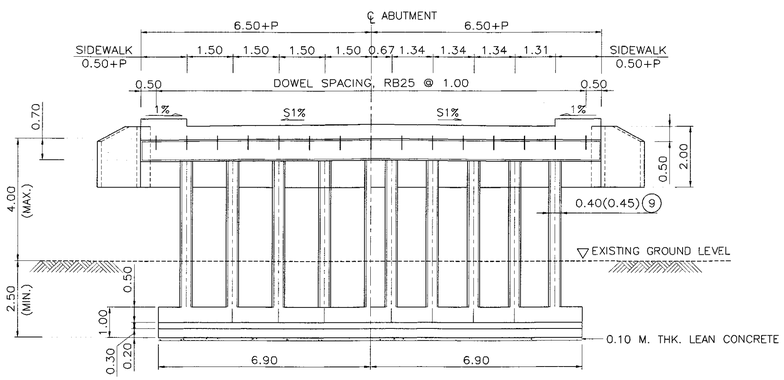

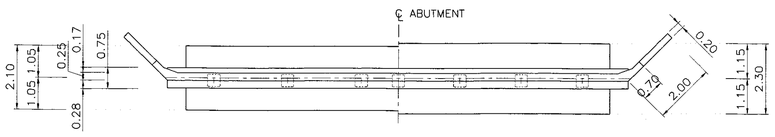

(5.00–6.00 M. SPAN) (7.00–8.00 M. SPAN)

ABUTMENT DETAILS (HALF ELEV. & PLAN)
SCALE 1 : 100

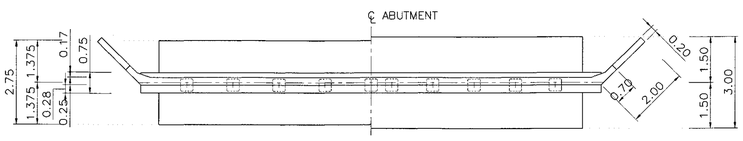

(9.00–10.00 M. SPAN) (12.00 M. SPAN)

ABUTMENT DETAILS (HALF ELEV. & PLAN)
SCALE 1 :100

NOTES :

1. ALL DIMENSIONS SHOWN ARE IN METERS UNLESS OTHERWISE INDICATED.
2. DESIGN LIVE LOAD : HL–93
3. A MINIMUM ULTIMATE COMPRESSIVE STRENGTH FOR A 150x150x150 MM. CUBE AT 28 DAYS AS FOLLOWS:
   A) FOR ABUTMENT AND WINGWALL 35 MPa. (357 KG/CM^2)
   B) FOR FOOTING 35 MPa. (357 KG/CM^2)
   C) FOR SIDEWALK AND BARRIER 35 MPa. (357 KG/CM^2)
4. REBAR SIZES SMALLER THAN 12 MM. SHALL BE TIS 20 GRADE SR 24 PLAIN ROUND BARS, OTHERS SHALL BE TIS 24 GRADE SD 40 DEFORMED BARS UNLESS OTHERWISE INDICATED.
5. EACH SPREAD FOOTING SHALL BE LOCATED BELOW TO A DEPTH WHERE SCOUR WILL NOT AFFECT CAPACITY, THE MINIMUM ALLOWABLE BEARING CAPACITY OF 0.20 MPa (20 TON/M^2)
6. HORIZONTAL CROSS BRACING BETWEEN COLUMNS OF PILE BENT SHALL BE PROVIDED AS FOLLOWS:
   A) IF THE DISTANCE FROM EXISTING GROUND LEVEL TO THE BOTTOM OF THE CAP BEAM EXCEED 3.00 M., A BRACING SHALL BE PLACED IN SUCH A WAY THAT THE DISTANCE FROM THE BOTTOM OF THE CAP BEAM TO THE CENTERLINE OF THE BRACING IS NOT MORE THAN 3.00 M.
   B) IF THE DISTANCE BETWEEN THE CENTERLINE OF THE BRACING TO THE EXISTING GROUND LEVEL EXCEED 3.00 M., ADDITIONAL BRACINGS SHALL BE PROVIDED AT AN INTERVAL NOT MORE THAN 3.00 M.
7. R = 0.50 M. FOR THE BRIDGE WITHOUT SIDEWALK (P = 0.00). FOR THE BRIDGE WITH SIDEWALK OF P = 0.50 AND 1.00, R = 0.50 M. AND 1.00 M., RESPECTIVELY.
8. *ADJUST SPACING OF STEEL REINFORCEMENT IN TABLE BY @ 0.10 (TYP.) TO RESIST EARTHQUAKE FORCE. (IN CASE OF BRIDGE LOCATED IN SEISMIC LEVEL 1B AND 2)

(9) USING 0.45 WHEN PILE BENT AND BEAM ARE IN SALTWATER
(10) LAP SPLICE OF MAIN REINFORCING BAR IS NOT PERMITTED FOR SEISMIC LEVEL 1B AND 2

REV.	REVISION	SIGNATURE	DATE
REV.1	REVISION 1/2017		JUN 2017

KINGDOM OF THAILAND
MINISTRY OF TRANSPORT
DEPARTMENT OF HIGHWAYS

STANDARD DRAWING
12.00 M. ROADWAY WIDTH SLAB BRIDGE, 0° SKEW
SPREAD FOOTING ABUTMENT DETAIL

DESIGNED : D.O.H. & CONSULTANTS **CHECKED :** BUREAU OF LOCATION & DESIGN **DATE :** OCT 2015

SUBMITTED : (DIRECTOR OF LOCATION & DESIGN BUREAU) **SCALE :** AS SHOWN

APPROVED : (FOR DIRECTOR GENERAL) **DWG NO.** PB–211

SHEET NO. 236/RI

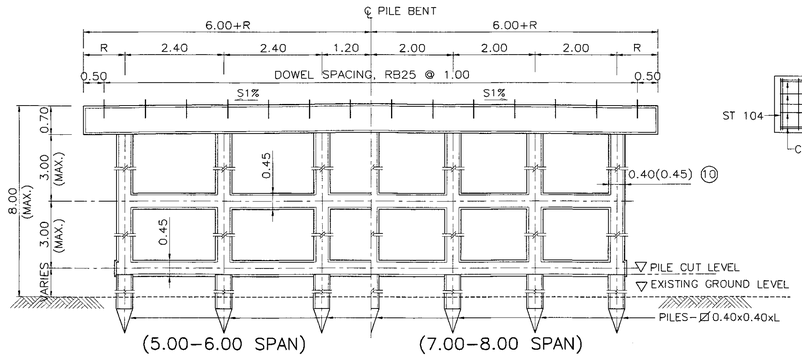

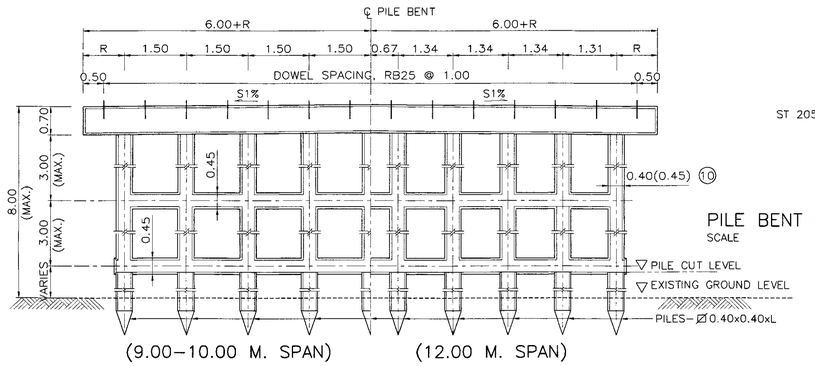

PILE BENT DETAILS (HALF ELEV.)
SCALE 1 : 75

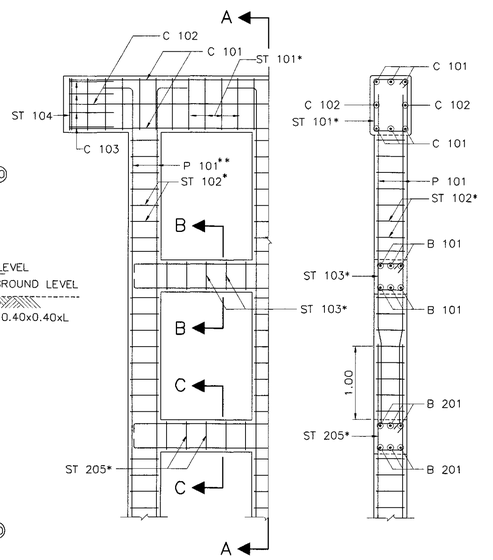

PILE BENT REINFORCEMENT DETAIL SECTION A – A
SCALE 1 : 50 SCALE 1 : 50

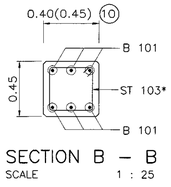

SECTION B – B
SCALE 1 : 25

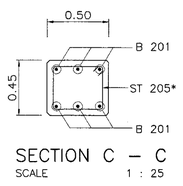

SECTION C – C
SCALE 1 : 25

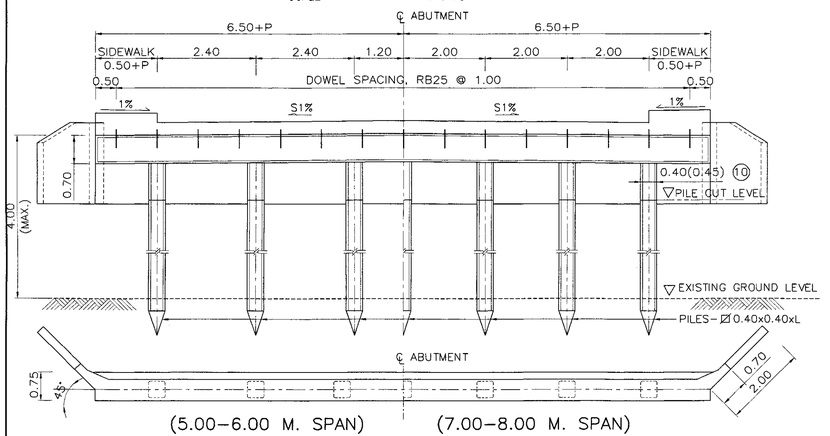

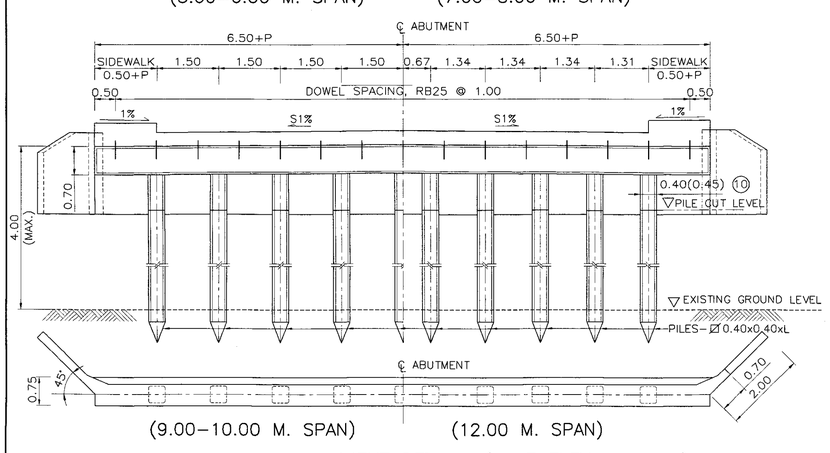

ABUTMENT DETAILS (HALF ELEV. & PLAN)
SCALE 1 : 75

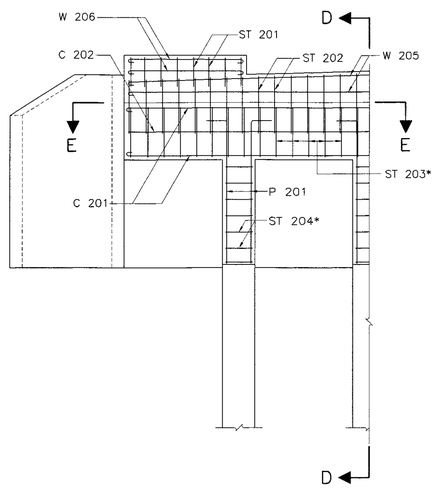

ABUTMENT REINFORCEMENT
SCALE 1 : 50

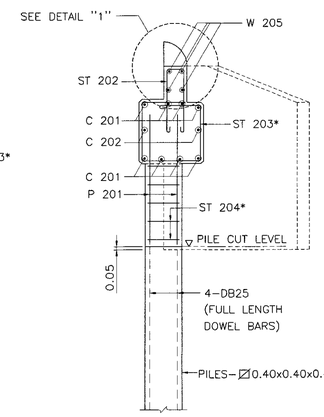

SECTION D – D
SCALE 1 : 50

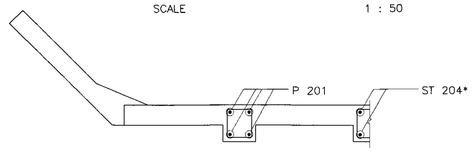

SECTION E – E
SCALE 1 : 50

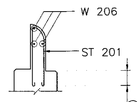

DETAIL "1"
SCALE 1 : 50

TABLE OF REINFORCEMENT

BAR BENDING DIAGRAMS	No.	BAR MARK	SPAN 5.00 M. REINF.	SPAN 6.00 M. REINF.	SPAN 7.00 M. REINF.	SPAN 8.00 M. REINF.	SPAN 9.00 M. REINF.	SPAN 10.00 M. REINF.	SPAN 12.00 M. REINF.
	①	C 101	6-DB25	6-DB25	6-DB25	6-DB25	6-DB25	6-DB25	6-DB25
	②	C 102	2-DB12	2-DB12	2-DB12	2-DB12	2-DB12	2-DB12	2-DB12
	③	C 103	4-DB12	4-DB12	4-DB12	4-DB12	4-DB12	4-DB12	4-DB12
	④	ST 101	RB9 @ 0.20	RB9 @ 0.20	RB9 @ 0.20	RB9 @ 0.20	RB9 @ 0.20	RB9 @ 0.20	RB9 @ 0.20
	⑤	ST 102	RB9 @ 0.20	RB9 @ 0.20	RB9 @ 0.20	RB9 @ 0.20	RB9 @ 0.20	RB9 @ 0.20	RB9 @ 0.20
	⑥	ST 103	DB12 @ 0.20	DB12 @ 0.20	DB12 @ 0.20	DB12 @ 0.20	DB12 @ 0.20	DB12 @ 0.20	DB12 @ 0.20
	⑦	ST 104	2-RB9	2-RB9	2-RB9	2-RB9	2-RB9	2-RB9	2-RB9
	⑧	B 101	6-DB25	6-DB25	6-DB25	6-DB25	6-DB25	6-DB25	6-DB25
	⑨+	P 101 (LEVEL 1)	4-DB25	4-DB25	4-DB25	4-DB25	4-DB25	4-DB25	4-DB25
		P 101 (LEVEL 2)	8-DB25	8-DB25	8-DB25	8-DB25	8-DB25	8-DB25	8-DB25
	⑩	C 201	8-DB25	8-DB25	8-DB25	8-DB25	8-DB25	8-DB25	8-DB25
	⑪	C 202	2-DB12	2-DB12	2-DB12	2-DB12	2-DB12	2-DB12	2-DB12
	⑫	ST 201	RB9 @ 0.20	RB9 @ 0.20	RB9 @ 0.20	RB9 @ 0.20	RB9 @ 0.20	RB9 @ 0.20	RB9 @ 0.20
	⑬	ST 202	RB9 @ 0.20	RB9 @ 0.20	RB9 @ 0.20	RB9 @ 0.20	RB9 @ 0.20	RB9 @ 0.20	RB9 @ 0.20
	⑭	ST 203	RB9 @ 0.20	RB9 @ 0.20	RB9 @ 0.20	RB9 @ 0.20	RB9 @ 0.20	RB9 @ 0.20	RB9 @ 0.20
	⑮	ST 204	RB9 @ 0.20	RB9 @ 0.20	RB9 @ 0.20	RB9 @ 0.20	RB9 @ 0.20	RB9 @ 0.20	RB9 @ 0.20
	⑯	ST 205	DB12 @ 0.20	DB12 @ 0.20	DB12 @ 0.20	DB12 @ 0.20	DB12 @ 0.20	DB12 @ 0.20	DB12 @ 0.20
	⑰	B 201	6-DB25	6-DB25	6-DB25	6-DB25	6-DB25	6-DB25	6-DB25
	⑱+	P 201 (LEVEL 1)	4-DB25	4-DB25	4-DB25	4-DB25	4-DB25	4-DB25	4-DB25
		P 201 (LEVEL 2)	8-DB25	8-DB25	8-DB25	8-DB25	8-DB25	8-DB25	8-DB25
	⑲	W 205	4-DB12	4-DB12	4-DB12	4-DB12	4-DB12	4-DB12	4-DB12
	⑳	W 206	3-DB12	3-DB12	3-DB12	3-DB12	3-DB12	3-DB12	3-DB12

REMARK : ⑨+, ⑱+ = REINFORCEMENT NUMBERS OF P 101 AND P 201 ARE SHOWN PER COLUMN RELEVANT TO SEISMIC LEVEL 1 (1A OR 1B) AND 2

NOTES :

1. ALL DIMENSIONS SHOWN ARE IN METERS UNLESS OTHERWISE INDICATED.
2. DESIGN LIVE LOAD : HL-93
3. A MINIMUM ULTIMATE COMPRESSIVE STRENGTH FOR A 150x150x150 MM. CUBE AT 28 DAYS AS FOLLOWS:
   A) FOR PILE BENT/CAP BEAM 35 MPa. (357 KG/CM^2)
   B) FOR ABUTMENT/R.C. DRIVEN PILE 35 MPa. (357 KG/CM^2)
   C) FOR PRECAST DRIVEN PILE 45 MPa. (459 KG/CM^2)
   D) FOR SIDEWALK AND BARRIER 35 MPa. (357 KG/CM^2)
4. REBAR SIZES SMALLER THAN 12 MM. SHALL BE TIS 20 GRADE SR 24 PLAIN ROUND BARS, OTHERS SHALL BE TIS 24 GRADE SD 40 DEFORMED BARS UNLESS OTHERWISE INDICATED.
5. EACH PILE SHALL BE DRIVEN TO A DEPTH WHERE SCOUR WILL NOT AFFECT CAPACITY, THE MINIMUM ALLOWABLE CAPACITY OF 0.50mm. (50 TON) FOR EACH PILE 3.50 M. EMBEDED LENGTH UNDER A DEPTH ARE REQUIRED AND A MINIMUM
6. HORIZONTAL CROSS BRACING BETWEEN COLUMNS OF PILE BENT SHALL BE PROVIDED AS FOLLOWS:
   A) IF THE DISTANCE FROM EXISTING GROUND LEVEL TO THE BOTTOM OF THE CAP BEAM EXCEED 3.00 M., A BRACING SHALL BE PLACED IN SUCH A WAY THAT THE DISTANCE FROM THE BOTTOM OF THE CAP BEAM TO THE CENTERLINE OF THE BRACING IS NOT MORE THAN 3.00 M.
   B) IF THE DISTANCE BETWEEN THE CENTERLINE OF THE BRACING TO THE EXISTING GROUND LEVEL EXCEED 3.00 M., ADDITIONAL BRACINGS SHALL BE PROVIDED AT AN INTERVAL NOT MORE THAN 3.00 M.
7. *ADJUST SPACING OF STEEL REINFORCEMENT IN TABLE BY @ 0.10 (TYP.) TO RESIST EARTHQUAKE FORCE. (IN CASE OF BRIDGE LOCATED IN SEISMIC LEVEL 1B AND 2)
8. IF THE DISTANCE BETWEEN THE CENTERLINE OF THE BRACING TO THE EXISTING GROUND LEVEL OF ABUTMENT EXCEED 4.00 M., OTHER TYPE OF ABUTMENT AS DWG. NO. PB-309 SHALL BE USED.
9. R = 0.50 M. FOR THE BRIDGE WITHOUT SIDEWALK (P = 0.00). FOR THE BRIDGE WITH SIDEWALK OF P = 0.50 AND 1.00, R = 0.50 M. AND 1.00 M., RESPECTIVELY.
10. USING 0.45 WHEN PILE BENT AND BEAM ARE IN SALTWATER

REV.	REVISION	SIGNATURE	DATE
REV.1	REVISION 1/2017		JUN 2017

KINGDOM OF THAILAND

MINISTRY OF TRANSPORT
DEPARTMENT OF HIGHWAYS

STANDARD DRAWING

12.00 M. ROADWAY WIDTH SLAB BRIDGE, 0° SKEW
PILE BENT AND ABUTMENT DETAILS

DESIGNED : D.O.H. & CONSULTANTS	**CHECKED :** BUREAU OF LOCATION & DESIGN	**DATE :** OCT 2015
SUBMITTED : (DIRECTOR OF LOCATION & DESIGN BUREAU)		**SCALE :** AS SHOWN
APPROVED : (FOR DIRECTOR GENERAL)		**DWG NO.** PB-212
		SHEET NO. 237/R1

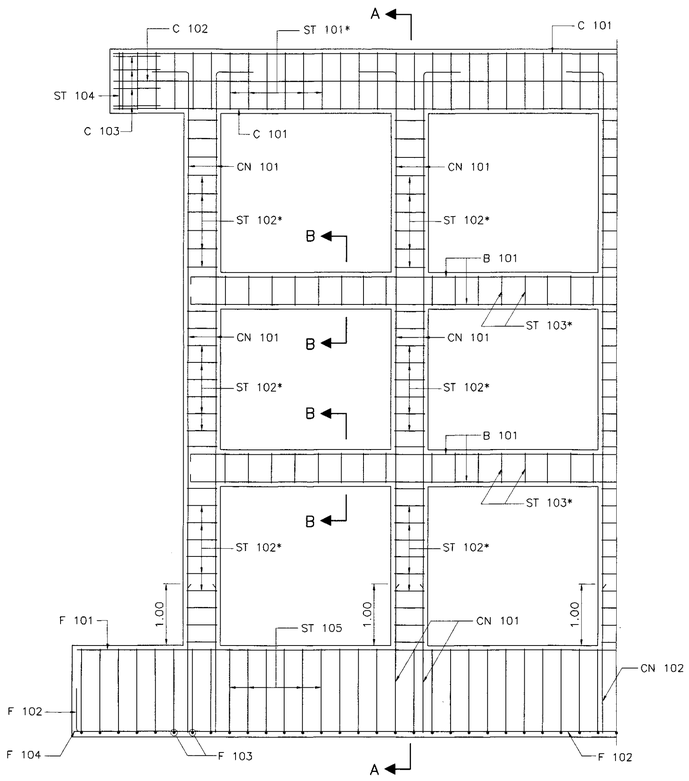

PIER REINFORCEMENT DETAILS
SCALE 1 : 50

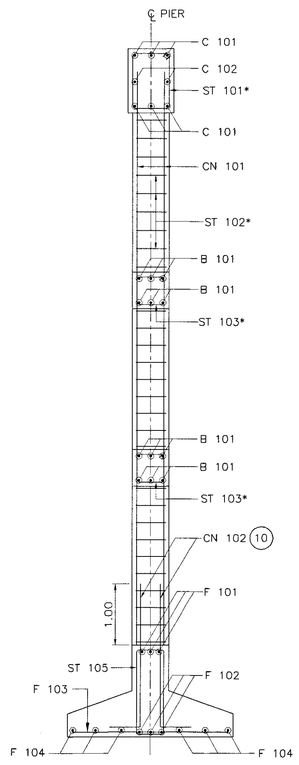

SECTION A – A
SCALE 1 : 50

TABLE OF REINFORCEMENT								
BAR BENDING DIAGRAMS	No.	BAR MARK	SPAN 5.00 M. REINF.	SPAN 6.00 M. REINF.	SPAN 7.00 M. REINF.	SPAN 8.00 M. REINF.	SPAN 9.00 M. REINF.	SPAN 10.00 M. REINF.	SPAN 12.00 M. REINF.
	①	C 101	6–DB25	6–DB25	6–DB25	6–DB25	6–DB25	6–DB25	6–DB25
	②	C 102	2–DB12	2–DB12	2–DB12	2–DB12	2–DB12	2–DB12	2–DB12
	③	C 103	4–DB12	4–DB12	4–DB12	4–DB12	4–DB12	4–DB12	4–DB12
	④+	CN 101 (LEVEL 1)	4–DB25	4–DB25	4–DB25	4–DB25	4–DB25	4–DB25	4–DB25
		CN 101 (LEVEL 2)	8–DB25	8–DB25	8–DB25	8–DB25	8–DB25	8–DB25	8–DB25
	⑤+	CN 102	4–DB25	4–DB25	4–DB25	4–DB25	4–DB25	4–DB25	4–DB25
	⑥	ST 101	RB9 @ 0.20	RB9 @ 0.20	RB9 @ 0.20	RB9 @ 0.20	RB9 @ 0.20	RB9 @ 0.20	RB9 @ 0.20
	⑦	ST 102	RB9 @ 0.20	RB9 @ 0.20	RB9 @ 0.20	RB9 @ 0.20	RB9 @ 0.20	RB9 @ 0.20	RB9 @ 0.20
	⑧	ST 103	DB12 @ 0.20	DB12 @ 0.20	DB12 @ 0.20	DB12 @ 0.20	DB12 @ 0.20	DB12 @ 0.20	DB12 @ 0.20
	⑨	ST 104	2–RB9	2–RB9	2–RB9	2–RB9	2–RB9	2–RB9	2–RB9
	⑩	ST 105	RB9 @ 0.20	RB9 @ 0.20	RB9 @ 0.20	RB9 @ 0.20	RB9 @ 0.20	RB9 @ 0.20	RB9 @ 0.20
	⑪	B 101	6–DB25	6–DB25	6–DB25	6–DB25	6–DB25	6–DB25	6–DB25
	⑫	F 101	3–DB25	3–DB25	3–DB25	3–DB25	3–DB25	3–DB25	3–DB25
	⑬	F 102	3–DB25	3–DB25	3–DB25	3–DB25	3–DB25	3–DB25	3–DB25
	⑭	F 103	DB25 @ 0.25	DB25 @ 0.25	DB25 @ 0.25	DB25 @ 0.25	DB25 @ 0.25	DB25 @ 0.25	DB25 @ 0.25
	⑮	F 104	6–DB25	6–DB25	6–DB25	6–DB25	6–DB25	6–DB25	6–DB25

REMARK : ④+,⑤+ = REINFORCEMENT NUMBERS OF CN 101 AND CN 102 ARE SHOWN PER COLUMN RELEVANT TO SEISMIC LEVEL 1 (1A OR 1B) AND 2

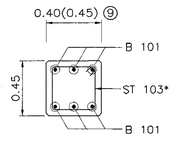

SECTION B – B
SCALE 1 : 25

NOTES :

1. ALL DIMENSIONS SHOWN ARE IN METERS UNLESS OTHERWISE INDICATED.
2. DESIGN LIVE LOAD : HL–93
3. A MINIMUM ULTIMATE COMPRESSIVE STRENGTH FOR A 150x150x150 MM. CUBE AT 28 DAYS AS FOLLOWS:
   A) FOR PILE BENT/CAP BEAM 35 MPa. (357 KG/CM^2)
   B) FOR FOOTING 35 MPa. (357 KG/CM^2)
   C) FOR SIDEWALK AND BARRIER 35 MPa. (357 KG/CM^2)
4. REBAR SIZES SMALLER THAN 12 MM. SHALL BE TIS 20 GRADE SR 24 PLAIN ROUND BARS, OTHERS SHALL BE TIS 24 GRADE SD 40 DEFORMED BARS UNLESS OTHERWISE INDICATED.
5. EACH SPREAD FOOTING SHALL BE LOCATED BELOW TO A DEPTH WHERE SCOUR WILL NOT AFFECT CAPACITY, THE MINIMUM ALLOWABLE BEARING CAPACITY OF 0.20 MPa (20 TON/M^2)
6. HORIZONTAL CROSS BRACING BETWEEN COLUMNS OF PILE BENT SHALL BE PROVIDED AS FOLLOWS:
   A) IF THE DISTANCE FROM EXISTING GROUND LEVEL TO THE BOTTOM OF THE CAP BEAM EXCEED 3.00 M., A BRACING SHALL BE PLACED IN SUCH A WAY THAT THE DISTANCE FROM THE BOTTOM OF THE CAP BEAM TO THE CENTERLINE OF THE BRACING IS NOT MORE THAN 3.00 M.
   B) IF THE DISTANCE BETWEEN THE CENTERLINE OF THE BRACING TO THE EXISTING GROUND LEVEL EXCEED 3.00 M., ADDITIONAL BRACINGS SHALL BE PROVIDED AT AN INTERVAL NOT MORE THAN 3.00 M.
7. *ADJUST SPACING OF STEEL REINFORCEMENT IN TABLE BY @ 0.10 (TYP.) TO RESIST EARTHQUAKE FORCE. (IN CASE OF BRIDGE LOCATED IN SEISMIC LEVEL 1B AND 2)
8. R = 0.50 M. FOR THE BRIDGE WITHOUT SIDEWALK (P = 0.00). FOR THE BRIDGE WITH SIDEWALK OF P = 0.50 AND 1.00, R = 0.50 M. AND 1.00 M., RESPECTIVELY.

⑨ USING 0.45 WHEN PILE BENT AND BEAM ARE IN SALTWATER
⑩ LAP SPLICE OF MAIN REINFORCING BAR IS NOT PERMITTED FOR SEISMIC LEVEL 1B AND 2

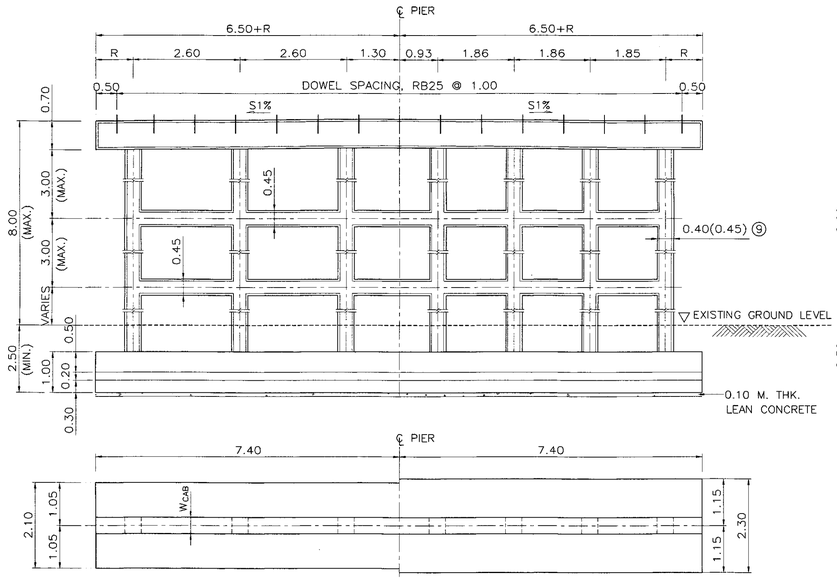

(5.00–6.00 M. SPAN) (7.00–8.00 M. SPAN)

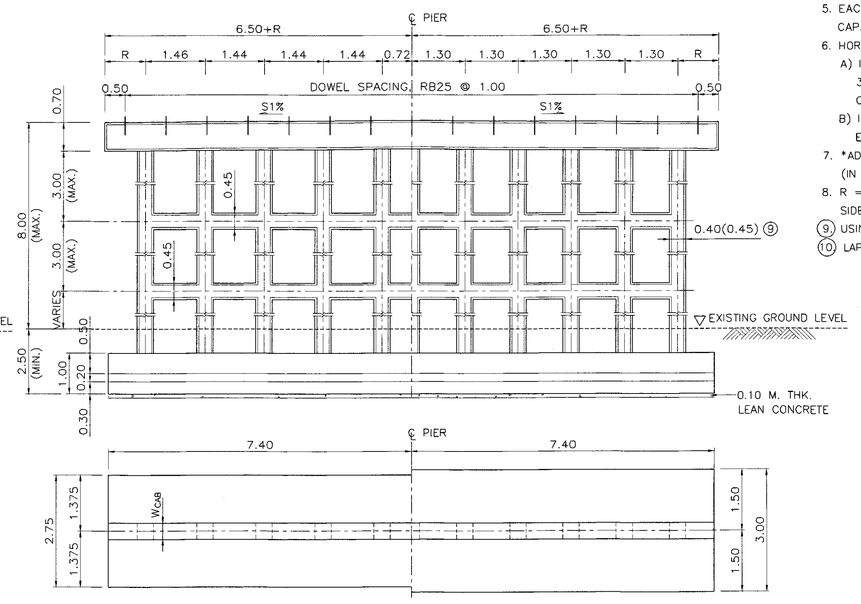

(9.00–10.00 M. SPAN) (12.00 M. SPAN)

PIER DETAILS (HALF ELEV. & PLAN)
SCALE 1 : 75

REV.	REVISION	SIGNATURE	DATE
REV.1	REVISION 1/2017		JUN 2017

KINGDOM OF THAILAND

MINISTRY OF TRANSPORT
DEPARTMENT OF HIGHWAYS

STANDARD DRAWING
13.00 M. ROADWAY WIDTH SLAB BRIDGE, 0° SKEW
SPREAD FOOTING PIER DETAIL

DESIGNED : D.O.H. & CONSULTANTS	**CHECKED :** BUREAU OF LOCATION & DESIGN	**DATE :** OCT 2015
SUBMITTED : (DIRECTOR OF LOCATION & DESIGN BUREAU)		**SCALE :** AS SHOWN
APPROVED : (FOR DIRECTOR GENERAL)		**DWG NO.** PB–213
		SHEET NO. 238/R1

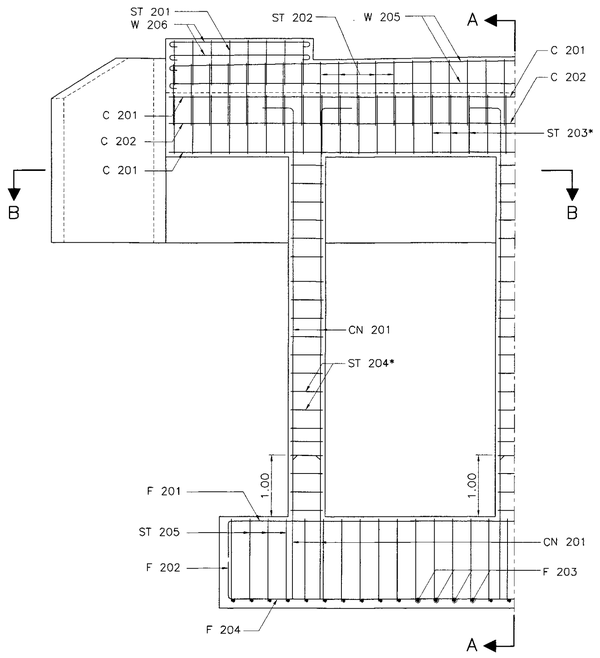

ABUTMENT REINFORCEMENT DETAILS
SCALE 1 : 50

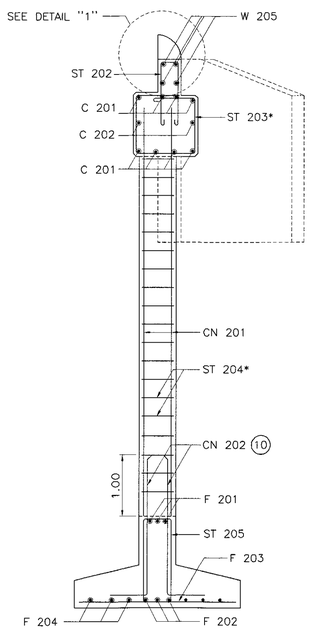

SECTION A – A
SCALE 1 : 50

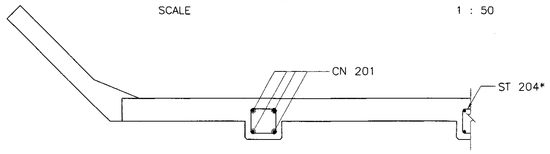

SECTION B – B
SCALE 1 : 50

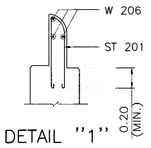

DETAIL "1"
SCALE 1 : 25

TABLE OF REINFORCEMENT								
BAR BENDING DIAGRAMS	No.	BAR MARK	SPAN 5.00 M. REINF.	SPAN 6.00 M. REINF.	SPAN 7.00 M. REINF.	SPAN 8.00 M. REINF.	SPAN 9.00 M. REINF.	SPAN 10.00 MM. REINF.	SPAN 12.00 M. REINF.
	①	C 201	8–DB25	8–DB25	8–DB25	8–DB25	8–DB25	8–DB25	8–DB25
	②	C 202	2–DB12	2–DB12	2–DB12	2–DB12	2–DB12	2–DB12	2–DB12
	③	ST 201	RB9 @ 0.20	RB9 @ 0.20	RB9 @ 0.20	RB9 @ 0.20	RB9 @ 0.20	RB9 @ 0.20	RB9 @ 0.20
	④	ST 202	RB9 @ 0.20	RB9 @ 0.20	RB9 @ 0.20	RB9 @ 0.20	RB9 @ 0.20	RB9 @ 0.20	RB9 @ 0.20
	⑤	ST 203	RB9 @ 0.20	RB9 @ 0.20	RB9 @ 0.20	RB9 @ 0.20	RB9 @ 0.20	RB9 @ 0.20	RB9 @ 0.20
	⑥	ST 204	RB9 @ 0.20	RB9 @ 0.20	RB9 @ 0.20	RB9 @ 0.20	RB9 @ 0.20	RB9 @ 0.20	RB9 @ 0.20
	⑦	ST 205	RB9 @ 0.20	RB9 @ 0.20	RB9 @ 0.20	RB9 @ 0.20	RB9 @ 0.20	RB9 @ 0.20	RB9 @ 0.20
	⑧+	CN 201 (LEVEL 1)	4–DB25	4–DB25	4–DB25	4–DB25	4–DB25	4–DB25	4–DB25
		CN 201 (LEVEL 2)	8–DB25	8–DB25	8–DB25	8–DB25	8–DB25	8–DB25	8–DB25
	⑨+	CN 202	4–DB25	4–DB25	4–DB25	4–DB25	4–DB25	4–DB25	4–DB25
	⑩	F 201	3–DB25	3–DB25	3–DB25	3–DB25	3–DB25	3–DB25	3–DB25
	⑪	F 202	3–DB25	3–DB25	3–DB25	3–DB25	3–DB25	3–DB25	3–DB25
	⑫	F 203	DB25 @ 0.25	DB25 @ 0.25	DB25 @ 0.25	DB25 @ 0.25	DB25 @ 0.25	DB25 @ 0.25	DB25 @ 0.25
	⑬	F 204	6–DB25	6–DB25	6–DB25	6–DB25	6–DB25	6–DB25	6–DB25
	⑭	W 205	4–DB12	4–DB12	4–DB12	4–DB12	4–DB12	4–DB12	4–DB12
	⑮	W 206	3–DB12	3–DB12	3–DB12	3–DB12	3–DB12	3–DB12	3–DB12

REMARK : IF THE DISTANCE BETWEEN THE CENTERLINE OF THE BRACING TO THE EXISTING GROUND LEVEL OF ABUTMENT EXCEED 4.00 M., OTHER TYPE OF ABUTMENT AS DWG. NO. PB–310 SHALL BE USED, ⑧+ ⑨+ REINFORCEMENT NUMBERS OF CN 201 AND CN 202 ARE SHOWN PER COLUMN RELEVANT TO SEISMIC LEVEL 1 (1A OR 1B) AND 2.

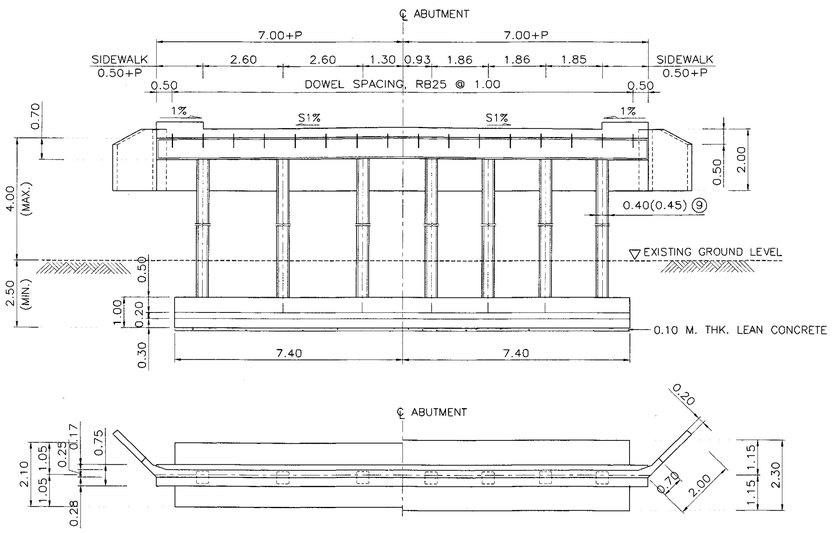

(5.00–6.00 M. SPAN) (7.00–8.00 M. SPAN)

ABUTMENT DETAILS (HALF ELEV. & PLAN)
SCALE 1 : 100

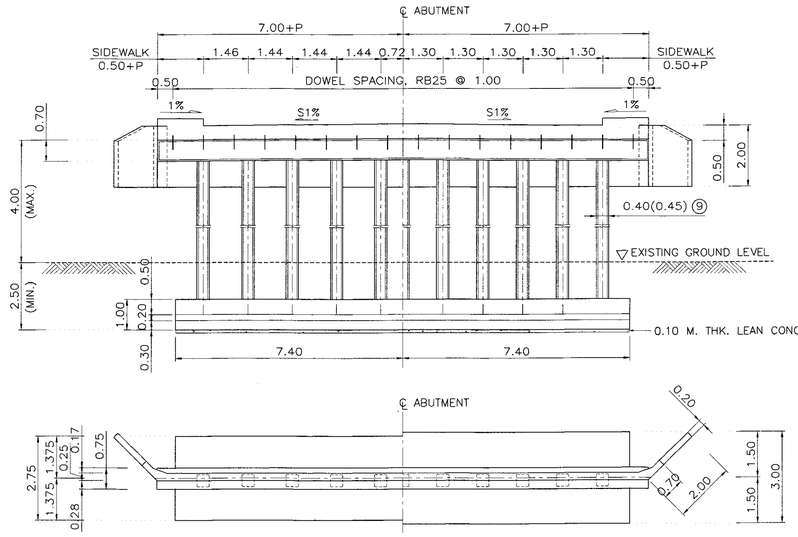

(9.00–10.00 M. SPAN) (12.00 M. SPAN)

ABUTMENT DETAILS (HALF ELEV. & PLAN)
SCALE 1 :100

NOTES :

1. ALL DIMENSIONS SHOWN ARE IN METERS UNLESS OTHERWISE INDICATED.
2. DESIGN LIVE LOAD : HL–93
3. A MINIMUM ULTIMATE COMPRESSIVE STRENGTH FOR A 150x150x150 MM. CUBE AT 28 DAYS AS FOLLOWS:
   A) FOR ABUTMENT AND WINGWALL 35 MPa. (357 KG/CM^2)
   B) FOR FOOTING 35 MPa. (357 KG/CM^2)
   C) FOR SIDEWALK AND BARRIER 35 MPa. (357 KG/CM^2)
4. REBAR SIZES SMALLER THAN 12 MM. SHALL BE TIS 20 GRADE SR 24 PLAIN ROUND BARS, OTHERS SHALL BE TIS 24 GRADE SD 40 DEFORMED BARS UNLESS OTHERWISE INDICATED.
5. EACH SPREAD FOOTING SHALL BE LOCATED BELOW TO A DEPTH WHERE SCOUR WILL NOT AFFECT CAPACITY, THE MINIMUM ALLOWABLE BEARING CAPACITY OF 0.20 MPa (20 TON/M^2)
6. HORIZONTAL CROSS BRACING BETWEEN COLUMNS OF PILE BENT SHALL BE PROVIDED AS FOLLOWS:
   A) IF THE DISTANCE FROM EXISTING GROUND LEVEL TO THE BOTTOM OF THE CAP BEAM EXCEED 3.00 M., A BRACING SHALL BE PLACED IN SUCH A WAY THAT THE DISTANCE FROM THE BOTTOM OF THE CAP BEAM TO THE CENTERLINE OF THE BRACING IS NOT MORE THAN 3.00 M.
   B) IF THE DISTANCE BETWEEN THE CENTERLINE OF THE BRACING TO THE EXISTING GROUND LEVEL EXCEED 3.00 M., ADDITIONAL BRACINGS SHALL BE PROVIDED AT AN INTERVAL NOT MORE THAN 3.00 M.
7. R = 0.50 M. FOR THE BRIDGE WITHOUT SIDEWALK (P = 0.00). FOR THE BRIDGE WITH SIDEWALK OF P = 0.50 AND 1.00, R = 0.50 M. AND 1.00 M., RESPECTIVELY.
8. *ADJUST SPACING OF STEEL REINFORCEMENT IN TABLE BY @ 0.10 (TYP.) TO RESIST EARTHQUAKE FORCE. (IN CASE OF BRIDGE LOCATED IN SEISMIC LEVEL 1B AND 2)

⑨ USING 0.45 WHEN PILE BENT AND BEAM ARE IN SALTWATER

⑩ LAP SPLICE OF MAIN REINFORCING BAR IS NOT PERMITTED FOR SEISMIC LEVEL 1B AND 2

KINGDOM OF THAILAND

MINISTRY OF TRANSPORT
DEPARTMENT OF HIGHWAYS

STANDARD DRAWING
13.00 M. ROADWAY WIDTH SLAB BRIDGE, 0° SKEW
SPREAD FOOTING ABUTMENT DETAIL

DESIGNED : D.O.H. & CONSULTANTS	**CHECKED :** BUREAU OF LOCATION & DESIGN	**DATE :** OCT 2015	
SUBMITTED : (DIRECTOR OF LOCATION & DESIGN BUREAU)		**SCALE :** AS SHOWN	
APPROVED : (FOR DIRECTOR GENERAL)		**DWG NO.** PB–214	
		SHEET NO. 239/R1	

REV.	REVISION	SIGNATURE	DATE
REV.1	REVISION 1/2017		JUN 2017

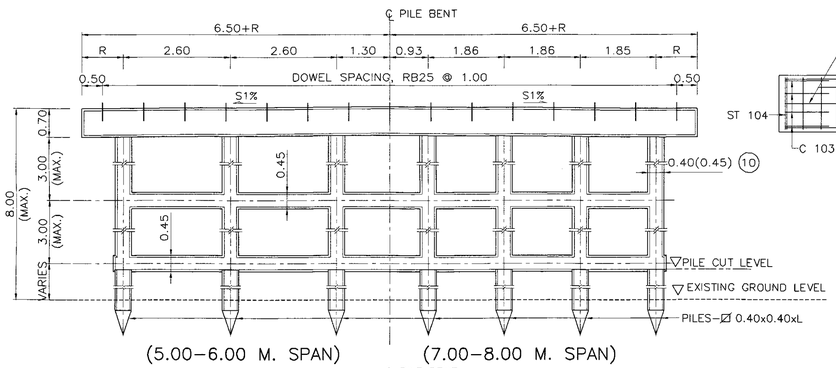

(5.00–6.00 M. SPAN) (7.00–8.00 M. SPAN)

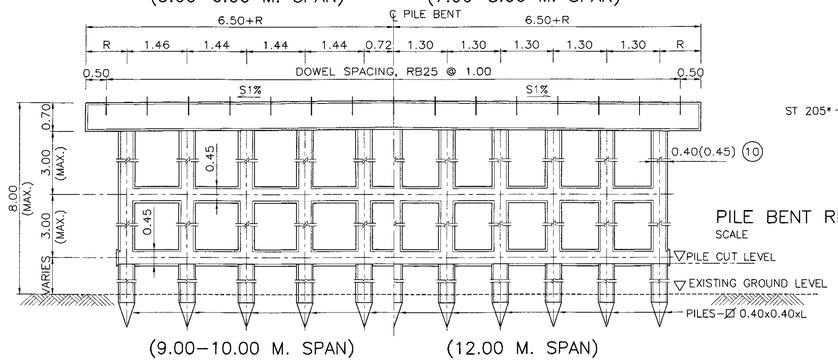

(9.00–10.00 M. SPAN) (12.00 M. SPAN)

PILE BENT DETAILS (HALF ELEV.)
SCALE 1 : 75

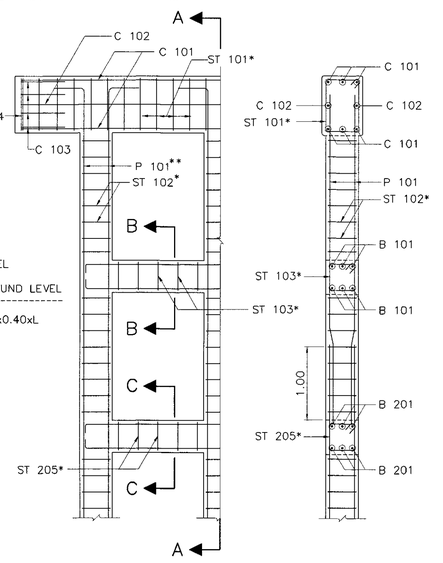

PILE BENT REINFORCEMENT DETAIL SECTION A – A
SCALE 1 : 50 SCALE 1 : 50

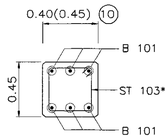

SECTION B – B
SCALE 1 : 25

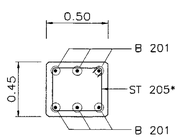

SECTION C – C
SCALE 1 : 25

TABLE OF REINFORCEMENT								
BAR BENDING DIAGRAMS	No.	BAR MARK	SPAN 5.00 M. REINF.	SPAN 6.00 M. REINF.	SPAN 7.00 M. REINF.	SPAN 8.00 M. REINF.	SPAN 9.00 M. REINF.	SPAN 10.00 M. REINF.	SPAN 12.00 M. REINF.
	①	C 101	6–DB25	6–DB25	6–DB25	6–DB25	6–DB25	6–DB25	6–DB25
	②	C 102	2–DB12	2–DB12	2–DB12	2–DB12	2–DB12	2–DB12	2–DB12
	③	C 103	4–DB12	4–DB12	4–DB12	4–DB12	4–DB12	4–DB12	4–DB12
	④	ST 101	RB9 @ 0.20	RB9 @ 0.20	RB9 @ 0.20	RB9 @ 0.20	RB9 @ 0.20	RB9 @ 0.20	RB9 @ 0.20
	⑤	ST 102	RB9 @ 0.20	RB9 @ 0.20	RB9 @ 0.20	RB9 @ 0.20	RB9 @ 0.20	RB9 @ 0.20	RB9 @ 0.20
	⑥	ST 103	DB12 @ 0.20	DB12 @ 0.20	DB12 @ 0.20	DB12 @ 0.20	DB12 @ 0.20	DB12 @ 0.20	DB12 @ 0.20
	⑦	ST 104	2–RB9	2–RB9	2–RB9	2–RB9	2–RB9	2–RB9	2–RB9
	⑧	B 101	6–DB25	6–DB25	6–DB25	6–DB25	6–DB25	6–DB25	6–DB25
	⑨+	P 101 (LEVEL 1)	4–DB25	4–DB25	4–DB25	4–DB25	4–DB25	4–DB25	4–DB25
		P 101 (LEVEL 2)	8–DB25	8–DB25	8–DB25	8–DB25	8–DB25	8–DB25	8–DB25
	⑩	C 201	8–DB25	8–DB25	8–DB25	8–DB25	8–DB25	8–DB25	8–DB25
	⑪	C 202	2–DB12	2–DB12	2–DB12	2–DB12	2–DB12	2–DB12	2–DB12
	⑫	ST 201	RB9 @ 0.20	RB9 @ 0.20	RB9 @ 0.20	RB9 @ 0.20	RB9 @ 0.20	RB9 @ 0.20	RB9 @ 0.20
	⑬	ST 202	RB9 @ 0.20	RB9 @ 0.20	RB9 @ 0.20	RB9 @ 0.20	RB9 @ 0.20	RB9 @ 0.20	RB9 @ 0.20
	⑭	ST 203	RB9 @ 0.20	RB9 @ 0.20	RB9 @ 0.20	RB9 @ 0.20	RB9 @ 0.20	RB9 @ 0.20	RB9 @ 0.20
	⑮	ST 204	RB9 @ 0.20	RB9 @ 0.20	RB9 @ 0.20	RB9 @ 0.20	RB9 @ 0.20	RB9 @ 0.20	RB9 @ 0.20
	⑯	ST 205	DB12 @ 0.20	DB12 @ 0.20	DB12 @ 0.20	DB12 @ 0.20	DB12 @ 0.20	DB12 @ 0.20	DB12 @ 0.20
	⑰	B 201	6–DB25	6–DB25	6–DB25	6–DB25	6–DB25	6–DB25	6–DB25
	⑱+	P 201 (LEVEL 1)	4–DB25	4–DB25	4–DB25	4–DB25	4–DB25	4–DB25	4–DB25
		P 201 (LEVEL 2)	8–DB25	8–DB25	8–DB25	8–DB25	8–DB25	8–DB25	8–DB25
	⑲	W 205	4–DB12	4–DB12	4–DB12	4–DB12	4–DB12	4–DB12	4–DB12
	⑳	W 206	3–DB12	3–DB12	3–DB12	3–DB12	3–DB12	3–DB12	3–DB12

REMARK : ⑨+, ⑱+ = REINFORCEMENT NUMBERS OF P 101 AND P 201 ARE SHOWN PER COLUMN RELEVANT TO SEISMIC LEVEL 1 (1A OR 1B) AND 2

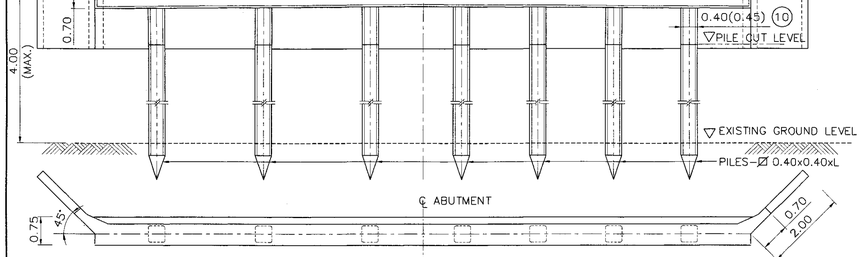

(5.00–6.00 M. SPAN) (7.00–8.00 M. SPAN)

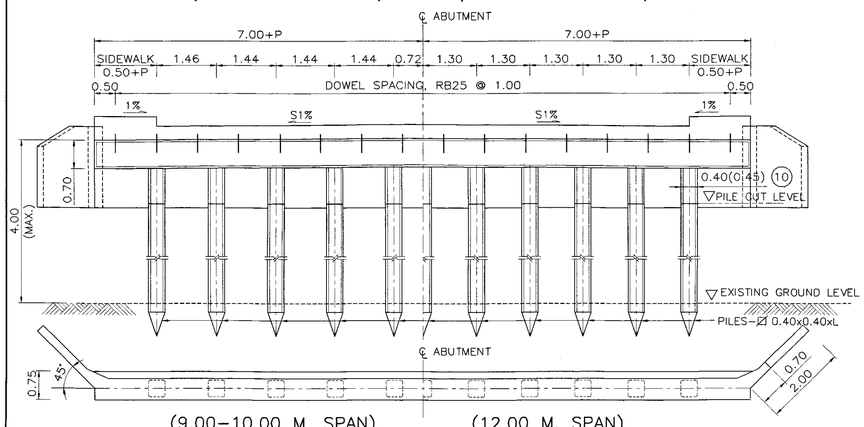

(9.00–10.00 M. SPAN) (12.00 M. SPAN)

ABUTMENT DETAILS (HALF ELEV. & PLAN)
SCALE 1 : 75

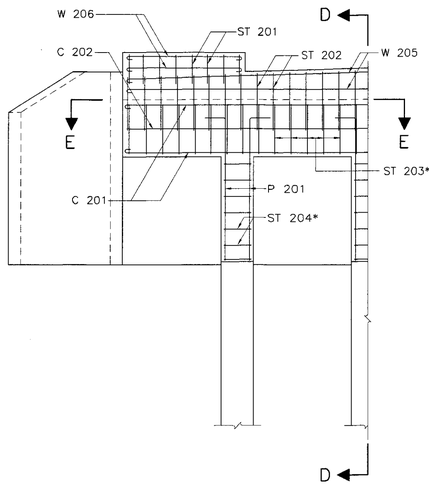

ABUTMENT REINFORCEMENT
SCALE 1 : 50

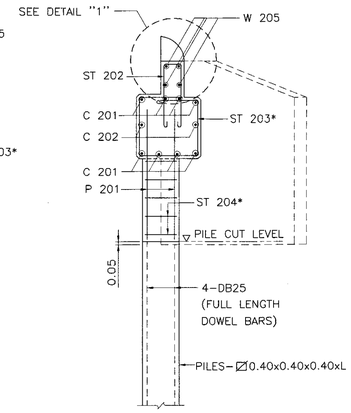

SECTION D – D
SCALE 1 : 50

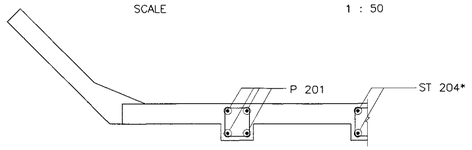

SECTION E – E
SCALE 1 : 50

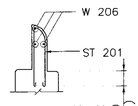

DETAIL "1"
SCALE 1 : 50

NOTES :

1. ALL DIMENSIONS SHOWN ARE IN METERS UNLESS OTHERWISE INDICATED.
2. DESIGN LIVE LOAD : HL–93
3. A MINIMUM ULTIMATE COMPRESSIVE STRENGTH FOR A 150x150x150 MM. CUBET AT 28 DAYS AS FOLLOWS:
   A) FOR PILE BENT/CAP BEAM 35 MPa. (357 KG/CM^2)
   B) FOR ABUTMENT/R.C. DRIVEN PILE 35 MPa. (357 KG/CM^2)
   C) FOR PRECAST DRIVEN PILE 45 MPa. (459 KG/CM^2)
   D) FOR SIDEWALK AND BARRIER 35 MPa. (357 KG/CM^2)
4. REBAR SIZES SMALLER THAN 12 MM. SHALL BE TIS 20 GRADE SR 24 PLAIN ROUND BARS, OTHERS SHALL BE TIS 24 GRADE SD 40 DEFORMED BARS UNLESS OTHERWISE INDICATED.
5. EACH PILE SHALL BE DRIVEN TO A DEPTH WHERE SCOUR WILL NOT AFFECT CAPACITY, THE MINIMUM ALLOWABLE CAPACITY OF 0.50 MN (50 TON) FOR EACH PILE AND A MINIMUM 3.50 M. EMBEDED LENGTH UNDER A DEPTH ARE REQUIRED
6. HORIZONTAL CROSS BRACING BETWEEN COLUMNS OF PILE BENT SHALL BE PROVIDED AS FOLLOWS:
   A) IF THE DISTANCE FROM EXISTING GROUND LEVEL TO THE BOTTOM OF THE CAP BEAM EXCEED 3.00 M., A BRACING SHALL BE PLACED IN SUCH A WAY THAT THE DISTANCE FROM THE BOTTOM OF THE CAP BEAM TO THE CENTERLINE OF THE BRACING IS NOT MORE THAN 3.00 M.
   B) IF THE DISTANCE BETWEEN THE CENTERLINE OF THE BRACING TO THE EXISTING GROUND LEVEL EXCEED 3.00 M., ADDITIONAL BRACINGS SHALL BE PROVIDED AT AN INTERVAL NOT MORE THAN 3.00 M.
7. *ADJUST SPACING OF STEEL REINFORCEMENT IN TABLE BY @ 0.10 (TYP.) TO RESIST EARTHQUAKE FORCE. (IN CASE OF BRIDGE LOCATED IN SEISMIC LEVEL 1B AND 2)
8. IF THE DISTANCE BETWEEN THE CENTERLINE OF THE BRACING TO THE EXISTING GROUND LEVEL OF ABUTMENT EXCEED 4.00 M., OTHER TYPE OF ABUTMENT AS DWG. NO. PB–309 SHALL BE USED.
9. R = 0.50 M. FOR THE BRIDGE WITHOUT SIDEWALK (P = 0.00). FOR THE BRIDGE WITH SIDEWALK OF P = 0.50 AND 1.00, R = 0.50 M. AND 1.00 M., RESPECTIVELY. SIDEWALK OF P = 0.50 AND 1.00, R = 0.50 M. AND 1.00 M., RESPECTIVELY.

⓪ USING 0.45 WHEN PILE BENT AND BEAM ARE IN SALTWATER

REV.	REVISION	SIGNATURE	DATE
REV.1	REVISION 1/2017		JUN 2017

KINGDOM OF THAILAND
MINISTRY OF TRANSPORT
DEPARTMENT OF HIGHWAYS

STANDARD DRAWING
13.00 M. ROADWAY WIDTH SLAB BRIDGE, 0° SKEW
PILE BENT AND ABUTMENT DETAILS

DESIGNED : D.O.H. & CONSULTANTS	**CHECKED :** BUREAU OF LOCATION & DESIGN	**DATE :** OCT 2015
SUBMITTED : (DIRECTOR OF LOCATION & DESIGN BUREAU)		**SCALE :** AS SHOWN
APPROVED : (FOR DIRECTOR GENERAL)		**DWG NO.** PB–215
		SHEET NO. 240/R1

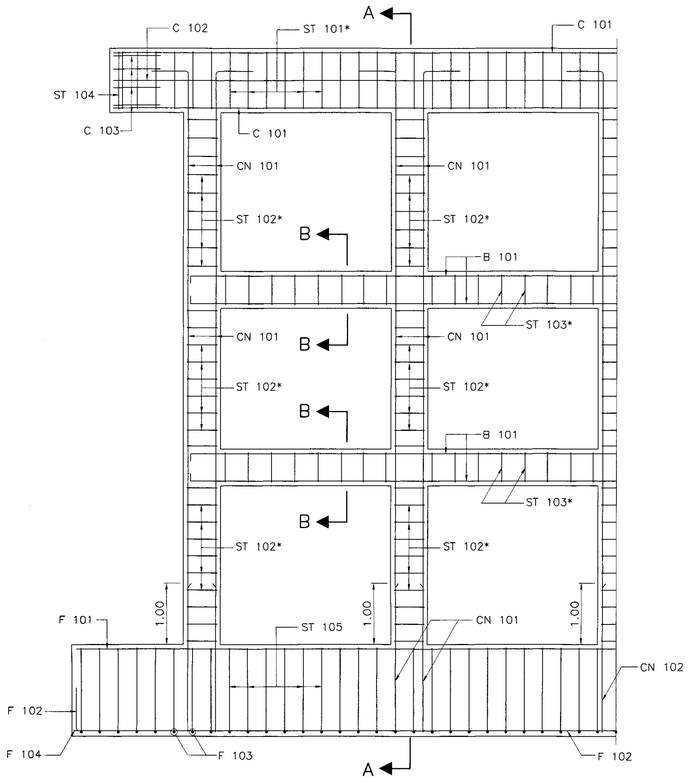

PIER REINFORCEMENT DETAILS
SCALE 1 : 50

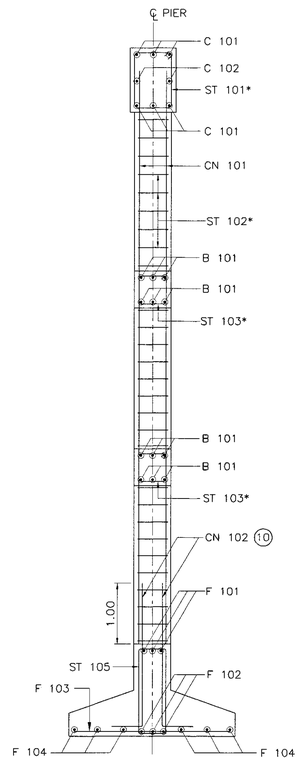

SECTION A – A
SCALE 1 : 50

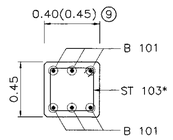

SECTION B – B
SCALE 1 : 25

TABLE OF REINFORCEMENT

BAR BENDING DIAGRAMS	No.	BAR MARK	SPAN 5.00 M. REINF.	SPAN 6.00 M. REINF.	SPAN 7.00 M. REINF.	SPAN 8.00 M. REINF.	SPAN 9.00 M. REINF.	SPAN 10.00 M. REINF.	SPAN 12.00 M. REINF.
	①	C 101	6–DB25	6–DB25	6–DB25	6–DB25	6–DB25	6–DB25	6–DB25
	②	C 102	2–DB12	2–DB12	2–DB12	2–DB12	2–DB12	2–DB12	2–DB12
	③	C 103	4–DB12	4–DB12	4–DB12	4–DB12	4–DB12	4–DB12	4–DB12
	④+	CN 101 (LEVEL 1)	4–DB25	4–DB25	4–DB25	4–DB25	4–DB25	4–DB25	4–DB25
		CN 101 (LEVEL 2)	8–DB25	8–DB25	8–DB25	8–DB25	8–DB25	8–DB25	8–DB25
	⑤+	CN 102	4–DB25	4–DB25	4–DB25	4–DB25	4–DB25	4–DB25	4–DB25
	⑥	ST 101	RB9 @ 0.20	RB9 @ 0.20	RB9 @ 0.20	RB9 @ 0.20	RB9 @ 0.20	RB9 @ 0.20	RB9 @ 0.20
	⑦	ST 102	RB9 @ 0.20	RB9 @ 0.20	RB9 @ 0.20	RB9 @ 0.20	RB9 @ 0.20	RB9 @ 0.20	RB9 @ 0.20
	⑧	ST 103	DB12 @ 0.20	DB12 @ 0.20	DB12 @ 0.20	DB12 @ 0.20	DB12 @ 0.20	DB12 @ 0.20	DB12 @ 0.20
	⑨	ST 104	2–RB9	2–RB9	2–RB9	2–RB9	2–RB9	2–RB9	2–RB9
	⑩	ST 105	RB9 @ 0.20	RB9 @ 0.20	RB9 @ 0.20	RB9 @ 0.20	RB9 @ 0.20	RB9 @ 0.20	RB9 @ 0.20
	⑪	B 101	6–DB25	6–DB25	6–DB25	6–DB25	6–DB25	6–DB25	6–DB25
	⑫	F 101	3–DB25	3–DB25	3–DB25	3–DB25	3–DB25	3–DB25	3–DB25
	⑬	F 102	3–DB25	3–DB25	3–DB25	3–DB25	3–DB25	3–DB25	3–DB25
	⑭	F 103	DB25 @ 0.25	DB25 @ 0.25	DB25 @ 0.25	DB25 @ 0.25	DB25 @ 0.25	DB25 @ 0.25	DB25 @ 0.25
	⑮	F 104	6–DB25	6–DB25	6–DB25	6–DB25	6–DB25	6–DB25	6–DB25

REMARK : ④+,⑤+ = REINFORCEMENT NUMBERS OF CN 101 AND CN 102 ARE SHOWN PER COLUMN RELEVANT TO SEISMIC LEVEL 1 (1A OR 1B) AND 2

NOTES :

1. ALL DIMENSIONS SHOWN ARE IN METERS UNLESS OTHERWISE INDICATED.
2. DESIGN LIVE LOAD : HL–93
3. A MINIMUM ULTIMATE COMPRESSIVE STRENGTH FOR A 150x150x150 MM. CUBE AT 28 DAYS AS FOLLOWS:
   A) FOR PILE BENT/CAP BEAM 35 MPa. (357 KG/CM^2)
   B) FOR FOOTING 35 MPa. (357 KG/CM^2)
   C) FOR SIDEWALK AND BARRIER 35 MPa. (357 KG/CM^2)
4. REBAR SIZES SMALLER THAN 12 MM. SHALL BE TIS 20 GRADE SR 24 PLAIN ROUND BARS, OTHERS SHALL BE TIS 24 GRADE SD 40 DEFORMED BARS UNLESS OTHERWISE INDICATED.
5. EACH SPREAD FOOTING SHALL BE LOCATED BELOW TO A DEPTH WHERE SCOUR WILL NOT AFFECT CAPACITY, THE MINIMUM ALLOWABLE BEARING CAPACITY OF 0.20 MPa (20 TON/M$_2$)
6. HORIZONTAL CROSS BRACING BETWEEN COLUMNS OF PILE BENT SHALL BE PROVIDED AS FOLLOWS:
   A) IF THE DISTANCE FROM EXISTING GROUND LEVEL TO THE BOTTOM OF THE CAP BEAM EXCEED 3.00 M., A BRACING SHALL BE PLACED IN SUCH A WAY THAT THE DISTANCE FROM THE BOTTOM OF THE CAP BEAM TO THE CENTERLINE OF THE BRACING IS NOT MORE THAN 3.00 M.
   B) IF THE DISTANCE BETWEEN THE CENTERLINE OF THE BRACING TO THE EXISTING GROUND LEVEL EXCEED 3.00 M., ADDITIONAL BRACINGS SHALL BE PROVIDED AT AN INTERVAL NOT MORE THAN 3.00 M.
7. *ADJUST SPACING OF STEEL REINFORCEMENT IN TABLE BY @ 0.10 (TYP.) TO RESIST EARTHQUAKE FORCE. (IN CASE OF BRIDGE LOCATED IN SEISMIC LEVEL 1B AND 2)
8. R = 0.50 M. FOR THE BRIDGE WITHOUT SIDEWALK (P = 0.00). FOR THE BRIDGE WITH SIDEWALK OF P = 0.50 AND 1.00, R = 0.50 M. AND 1.00 M., RESPECTIVELY.

(9) USING 0.45 WHEN PILE BENT AND BEAM ARE IN SALTWATER

(10) LAP SPLICE OF MAIN REINFORCING BAR IS NOT PERMITTED FOR SEISMIC LEVEL 1B AND 2

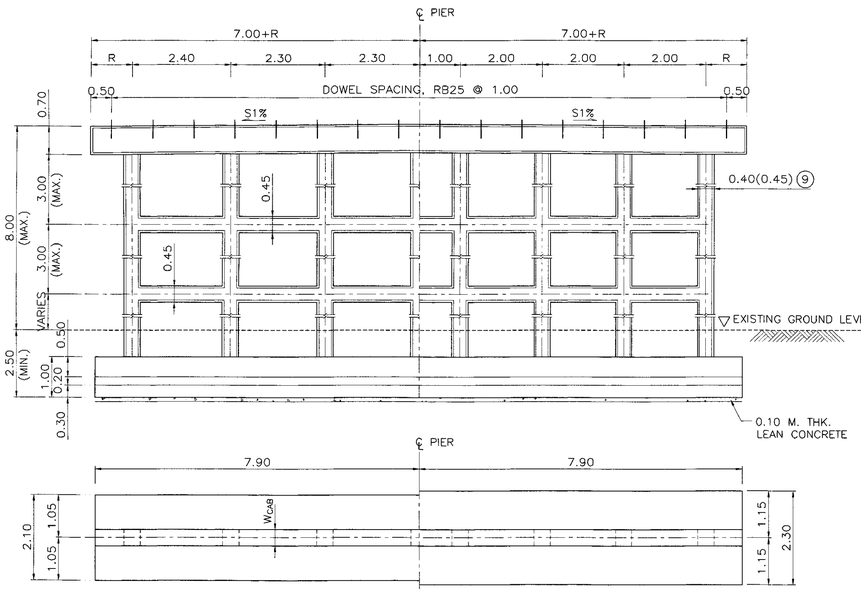

(5.00–6.00 M. SPAN) (7.00–8.00 M. SPAN)

PIER DETAILS (HALF ELEV. & PLAN)
SCALE 1 : 75

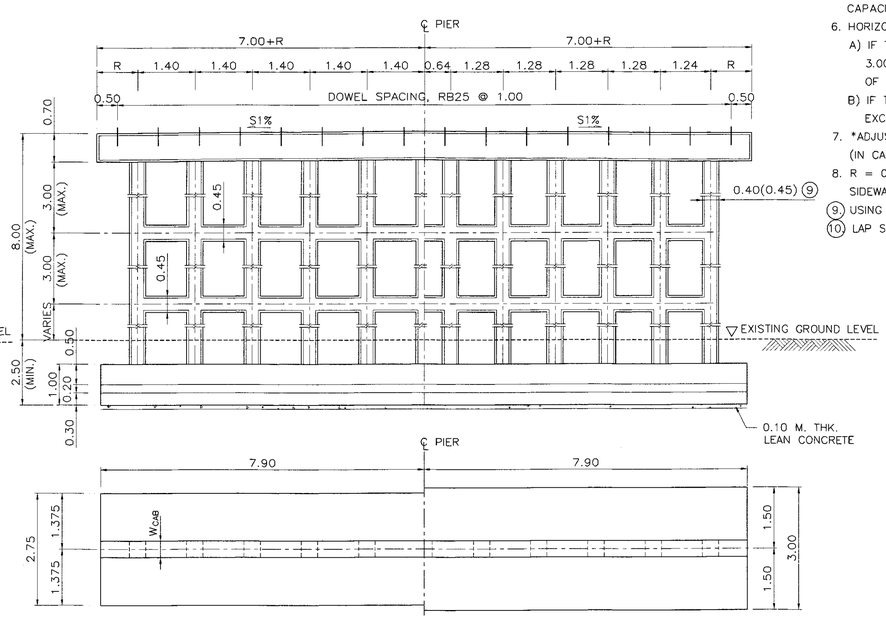

(9.00–10.00 M. SPAN) (12.00 M. SPAN)

PIER DETAILS (HALF ELEV. & PLAN)
SCALE 1 : 75

REV.	REVISION	SIGNATURE	DATE
REV.1	REVISION 1/2017		JUN 2017

KINGDOM OF THAILAND

MINISTRY OF TRANSPORT
DEPARTMENT OF HIGHWAYS

STANDARD DRAWING

14.00 M. ROADWAY WIDTH SLAB BRIDGE, 0° SKEW
SPREAD FOOTING PIER DETAIL

DESIGNED : D.O.H. & CONSULTANTS	**CHECKED :** BUREAU OF LOCATION & DESIGN	**DATE :** OCT 2015
SUBMITTED : (DIRECTOR OF LOCATION & DESIGN BUREAU)		**SCALE :** AS SHOWN
		DWG NO. PB–216
APPROVED : (FOR DIRECTOR GENERAL)		**SHEET NO.** 241/RI

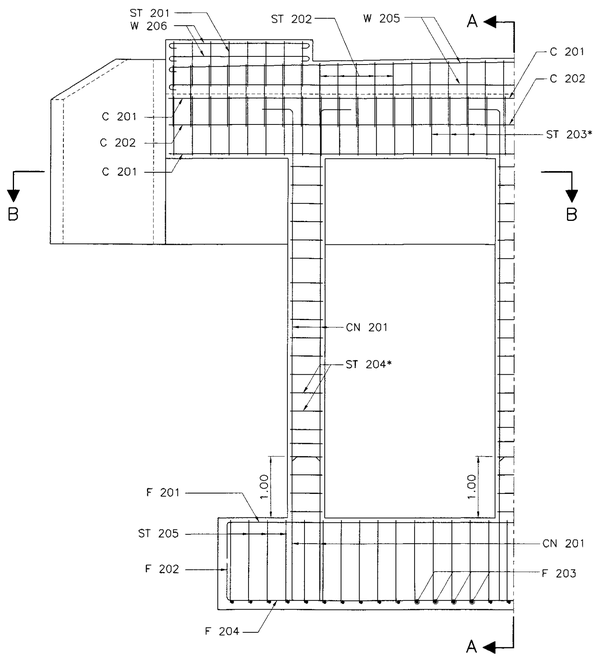

ABUTMENT REINFORCEMENT DETAILS
SCALE 1 : 50

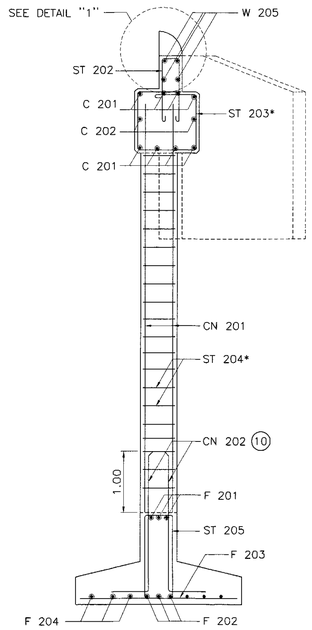

SECTION A – A
SCALE 1 : 50

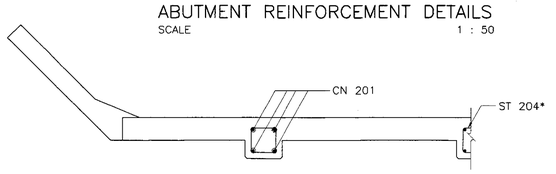

SECTION B – B
SCALE 1 : 50

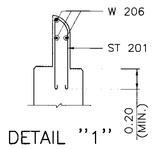

DETAIL "1"
SCALE 1 : 25

BAR BENDING DIAGRAMS	No.	BAR MARK	SPAN 5.00 M. REINF.	SPAN 6.00 M. REINF.	SPAN 7.00 M. REINF.	SPAN 8.00 M. REINF.	SPAN 9.00 M. REINF.	SPAN 10.00 MM. REINF.	SPAN 12.00 M. REINF.
	①	C 201	8–DB25	8–DB25	8–DB25	8–DB25	8–DB25	8–DB25	8–DB25
	②	C 202	2–DB12	2–DB12	2–DB12	2–DB12	2–DB12	2–DB12	2–DB12
	③	ST 201	RB9 @ 0.20	RB9 @ 0.20	RB9 @ 0.20	RB9 @ 0.20	RB9 @ 0.20	RB9 @ 0.20	RB9 @ 0.20
	④	ST 202	RB9 @ 0.20	RB9 @ 0.20	RB9 @ 0.20	RB9 @ 0.20	RB9 @ 0.20	RB9 @ 0.20	RB9 @ 0.20
	⑤	ST 203	RB9 @ 0.20	RB9 @ 0.20	RB9 @ 0.20	RB9 @ 0.20	RB9 @ 0.20	RB9 @ 0.20	RB9 @ 0.20
	⑥	ST 204	RB9 @ 0.20	RB9 @ 0.20	RB9 @ 0.20	RB9 @ 0.20	RB9 @ 0.20	RB9 @ 0.20	RB9 @ 0.20
	⑦	ST 205	RB9 @ 0.20	RB9 @ 0.20	RB9 @ 0.20	RB9 @ 0.20	RB9 @ 0.20	RB9 @ 0.20	RB9 @ 0.20
	⑧+	CN 201 (LEVEL 1)	4–DB25	4–DB25	4–DB25	4–DB25	4–DB25	4–DB25	4–DB25
		CN 201 (LEVEL 2)	8–DB25	8–DB25	8–DB25	8–DB25	8–DB25	8–DB25	8–DB25
	⑨+	CN 202	4–DB25	4–DB25	4–DB25	4–DB25	4–DB25	4–DB25	4–DB25
	⑩	F 201	3–DB25	3–DB25	3–DB25	3–DB25	3–DB25	3–DB25	3–DB25
	⑪	F 202	3–DB25	3–DB25	3–DB25	3–DB25	3–DB25	3–DB25	3–DB25
	⑫	F 203	DB25 @ 0.25	DB25 @ 0.25	DB25 @ 0.25	DB25 @ 0.25	DB25 @ 0.25	DB25 @ 0.25	DB25 @ 0.25
	⑬	F 204	6–DB25	6–DB25	6–DB25	6–DB25	6–DB25	6–DB25	6–DB25
	⑭	W 205	4–DB12	4–DB12	4–DB12	4–DB12	4–DB12	4–DB12	4–DB12
	⑮	W 206	3–DB12	3–DB12	3–DB12	3–DB12	3–DB12	3–DB12	3–DB12

REMARK : IF THE DISTANCE BETWEEN THE CENTERLINE OF THE BRACING TO THE EXISTING GROUND LEVEL OF ABUTMENT EXCEED 4.00 M., OTHER TYPE OF ABUTMENT AS DWG. NO. PB–310 SHALL BE USED, ⑧+ ⑨+ REINFORCEMENT NUMBERS OF CN 201 AND CN 202 ARE SHOWN PER COLUMN RELEVANT TO SEISMIC LEVEL 1 (1A OR 1B) AND 2.

NOTES :

1. ALL DIMENSIONS SHOWN ARE IN METERS UNLESS OTHERWISE INDICATED.
2. DESIGN LIVE LOAD : HL–93
3. A MINIMUM ULTIMATE COMPRESSIVE STRENGTH FOR A 150x150x150 MM. CUBE AT 28 DAYS AS FOLLOWS:
   A) FOR ABUTMENT AND WINGWALL 35 MPa. (357 KG/CM^2)
   B) FOR FOOTING 35 MPa. (357 KG/CM^2)
   C) FOR SIDEWALK AND BARRIER 35 MPa. (357 KG/CM^2)
4. REBAR SIZES SMALLER THAN 12 MM. SHALL BE TIS 20 GRADE SR 24 PLAIN ROUND BARS, OTHERS SHALL BE TIS 24 GRADE SD 40 DEFORMED BARS UNLESS OTHERWISE INDICATED.
5. EACH SPREAD FOOTING SHALL BE LOCATED BELOW TO A DEPTH WHERE SCOUR WILL NOT AFFECT CAPACITY, THE MINIMUM ALLOWABLE BEARING CAPACITY OF 0.20 MPa (20 TON/M$_2$)
6. HORIZONTAL CROSS BRACING BETWEEN COLUMNS OF PILE BENT SHALL BE PROVIDED AS FOLLOWS:
   A) IF THE DISTANCE FROM EXISTING GROUND LEVEL TO THE BOTTOM OF THE CAP BEAM EXCEED 3.00 M., A BRACING SHALL BE PLACED IN SUCH A WAY THAT THE DISTANCE FROM THE BOTTOM OF THE CAP BEAM TO THE CENTERLINE OF THE BRACING IS NOT MORE THAN 3.00 M.
   B) IF THE DISTANCE BETWEEN THE CENTERLINE OF THE BRACING TO THE EXISTING GROUND LEVEL EXCEED 3.00 M., ADDITIONAL BRACINGS SHALL BE PROVIDED AT AN INTERVAL NOT MORE THAN 3.00 M.
7. R = 0.50 M. FOR THE BRIDGE WITHOUT SIDEWALK (P = 0.00). FOR THE BRIDGE WITH SIDEWALK OF P = 0.50 AND 1.00, R = 0.50 M. AND 1.00 M., RESPECTIVELY.
8. *ADJUST SPACING OF STEEL REINFORCEMENT IN TABLE BY @ 0.10 (TYP.) TO RESIST EARTHQUAKE FORCE. (IN CASE OF BRIDGE LOCATED IN SEISMIC LEVEL 1B AND 2)

(9) USING 0.45 WHEN PILE BENT AND BEAM ARE IN SALTWATER

(10) LAP SPLICE OF MAIN REINFORCING BAR IS NOT PERMITTED FOR SEISMIC LEVEL 1B AND 2

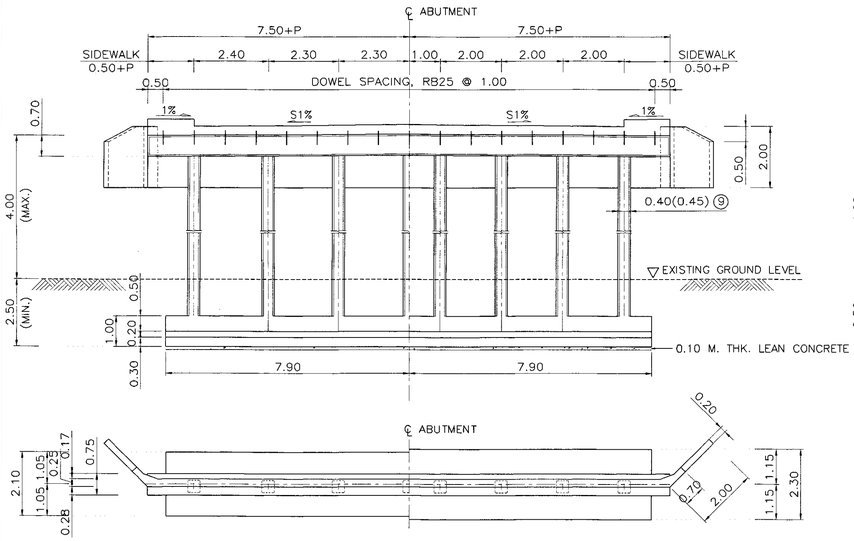

(5.00–6.00 M. SPAN) (7.00–8.00 M. SPAN)

ABUTMENT DETAILS (HALF ELEV. & PLAN)
SCALE 1 : 100

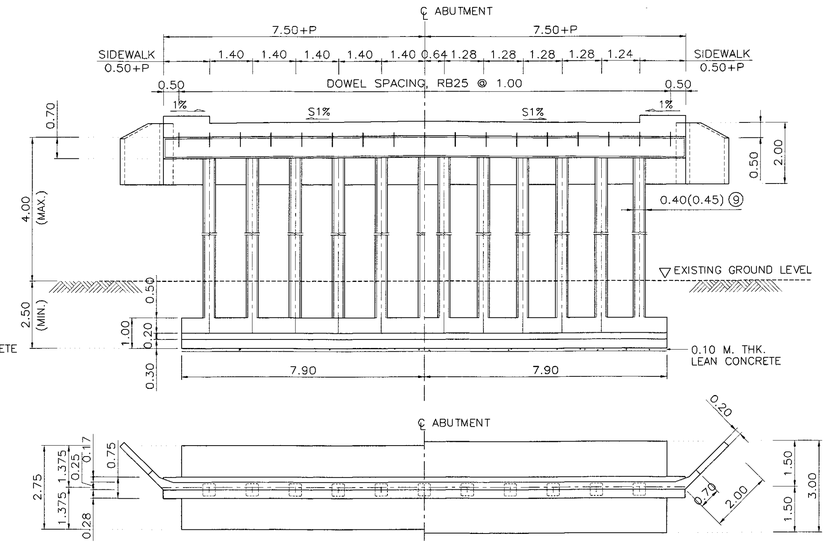

(9.00–10.00 M. SPAN) (12.00 M. SPAN)

ABUTMENT DETAILS (HALF ELEV. & PLAN)
SCALE 1 :100

REV.	REVISION	SIGNATURE	DATE
REV.1	REVISION 1/2017		JUN 2017

KINGDOM OF THAILAND

MINISTRY OF TRANSPORT
DEPARTMENT OF HIGHWAYS

STANDARD DRAWING

14.00 M. ROADWAY WIDTH SLAB BRIDGE, 0° SKEW
SPREAD FOOTING ABUTMENT DETAIL

DESIGNED : D.O.H. & CONSULTANTS	**CHECKED :** BUREAU OF LOCATION & DESIGN	**DATE :** OCT 2015
SUBMITTED : (DIRECTOR OF LOCATION & DESIGN BUREAU)		**SCALE :** AS SHOWN
APPROVED : (FOR DIRECTOR GENERAL)		**DWG NO.** PB–217
		SHEET NO. 242/R1

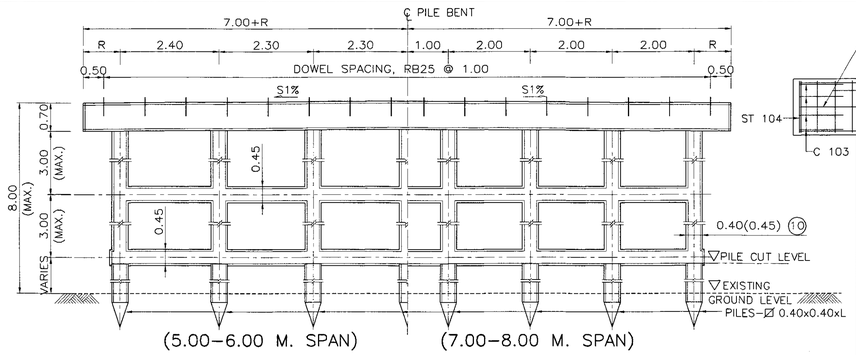

(5.00–6.00 M. SPAN) (7.00–8.00 M. SPAN)

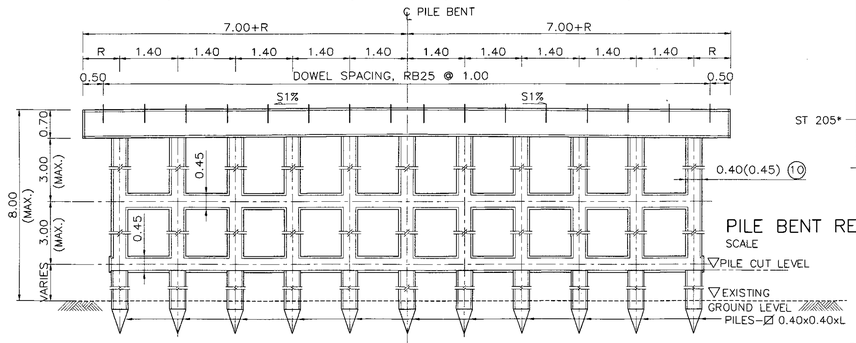

(9.00–10.00 M. SPAN) (12.00 M. SPAN)

PILE BENT DETAILS (HALF ELEV.)
SCALE 1 : 75

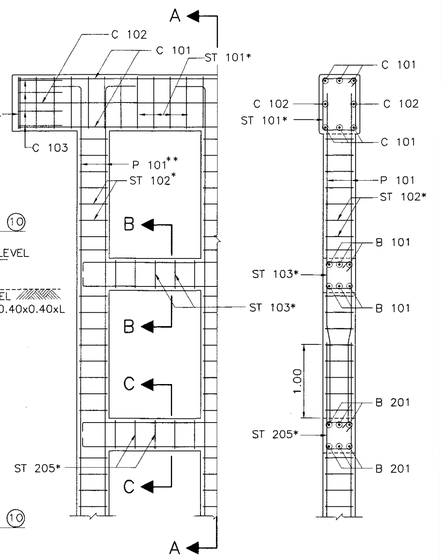

PILE BENT REINFORCEMENT DETAIL SECTION A – A
SCALE 1 : 50 SCALE 1 : 50

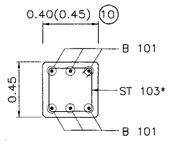

SECTION B – B
SCALE 1 : 25

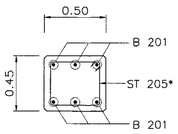

SECTION C – C
SCALE 1 : 25

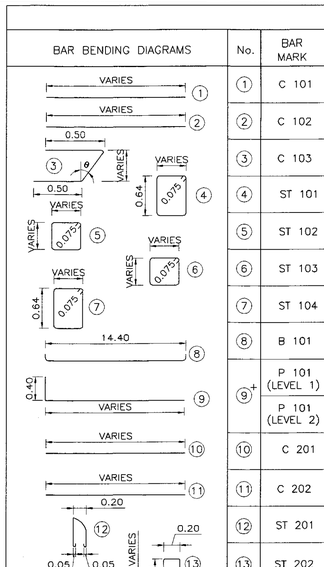

TABLE OF REINFORCEMENT

No.	BAR MARK	SPAN 5.00 M. REINF.	SPAN 6.00 M. REINF.	SPAN 7.00 M. REINF.	SPAN 8.00 M. REINF.	SPAN 9.00 M. REINF.	SPAN 10.00 M. REINF.	SPAN 12.00 M. REINF.
①	C 101	6–DB25	6–DB25	6–DB25	6–DB25	6–DB25	6–DB25	6–DB25
②	C 102	2–DB12	2–DB12	2–DB12	2–DB12	2–DB12	2–DB12	2–DB12
③	C 103	4–DB12	4–DB12	4–DB12	4–DB12	4–DB12	4–DB12	4–DB12
④	ST 101	RB9 @ 0.20	RB9 @ 0.20	RB9 @ 0.20	RB9 @ 0.20	RB9 @ 0.20	RB9 @ 0.20	RB9 @ 0.20
⑤	ST 102	RB9 @ 0.20	RB9 @ 0.20	RB9 @ 0.20	RB9 @ 0.20	RB9 @ 0.20	RB9 @ 0.20	RB9 @ 0.20
⑥	ST 103	DB12 @ 0.20	DB12 @ 0.20	DB12 @ 0.20	DB12 @ 0.20	DB12 @ 0.20	DB12 @ 0.20	DB12 @ 0.20
⑦	ST 104	2–RB9	2–RB9	2–RB9	2–RB9	2–RB9	2–RB9	2–RB9
⑧	B 101	6–DB25	6–DB25	6–DB25	6–DB25	6–DB25	6–DB25	6–DB25
⑨+	P 101 (LEVEL 1)	4–DB25	4–DB25	4–DB25	4–DB25	4–DB25	4–DB25	4–DB25
	P 101 (LEVEL 2)	8–DB25	8–DB25	8–DB25	8–DB25	8–DB25	8–DB25	8–DB25
⑩	C 201	8–DB25	8–DB25	8–DB25	8–DB25	8–DB25	8–DB25	8–DB25
⑪	C 202	2–DB12	2–DB12	2–DB12	2–DB12	2–DB12	2–DB12	2–DB12
⑫	ST 201	RB9 @ 0.20	RB9 @ 0.20	RB9 @ 0.20	RB9 @ 0.20	RB9 @ 0.20	RB9 @ 0.20	RB9 @ 0.20
⑬	ST 202	RB9 @ 0.20	RB9 @ 0.20	RB9 @ 0.20	RB9 @ 0.20	RB9 @ 0.20	RB9 @ 0.20	RB9 @ 0.20
⑭	ST 203	RB9 @ 0.20	RB9 @ 0.20	RB9 @ 0.20	RB9 @ 0.20	RB9 @ 0.20	RB9 @ 0.20	RB9 @ 0.20
⑮	ST 204	RB9 @ 0.20	RB9 @ 0.20	RB9 @ 0.20	RB9 @ 0.20	RB9 @ 0.20	RB9 @ 0.20	RB9 @ 0.20
⑯	ST 205	DB12 @ 0.20	DB12 @ 0.20	DB12 @ 0.20	DB12 @ 0.20	DB12 @ 0.20	DB12 @ 0.20	DB12 @ 0.20
⑰	B 201	6–DB25	6–DB25	6–DB25	6–DB25	6–DB25	6–DB25	6–DB25
⑱+	P 201 (LEVEL 1)	4–DB25	4–DB25	4–DB25	4–DB25	4–DB25	4–DB25	4–DB25
	P 201 (LEVEL 2)	8–DB25	8–DB25	8–DB25	8–DB25	8–DB25	8–DB25	8–DB25
⑲	W 205	4–DB12	4–DB12	4–DB12	4–DB12	4–DB12	4–DB12	4–DB12
⑳	W 206	3–DB12	3–DB12	3–DB12	3–DB12	3–DB12	3–DB12	3–DB12

REMARK : ⑨+, ⑱+ = REINFORCEMENT NUMBERS OF P 101 AND P 201 ARE SHOWN PER COLUMN RELEVANT TO SEISMIC LEVEL 1 (1A OR 1B) AND 2

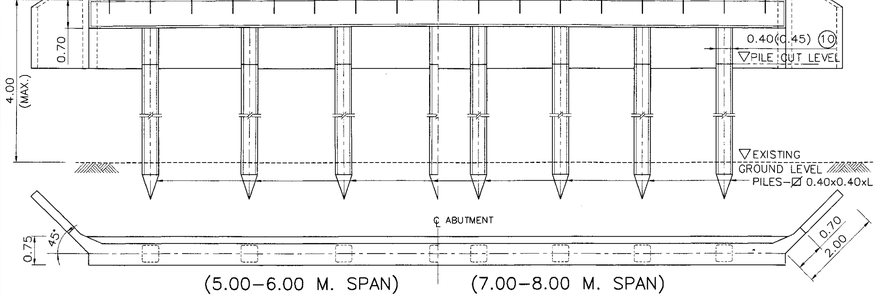

(5.00–6.00 M. SPAN) (7.00–8.00 M. SPAN)

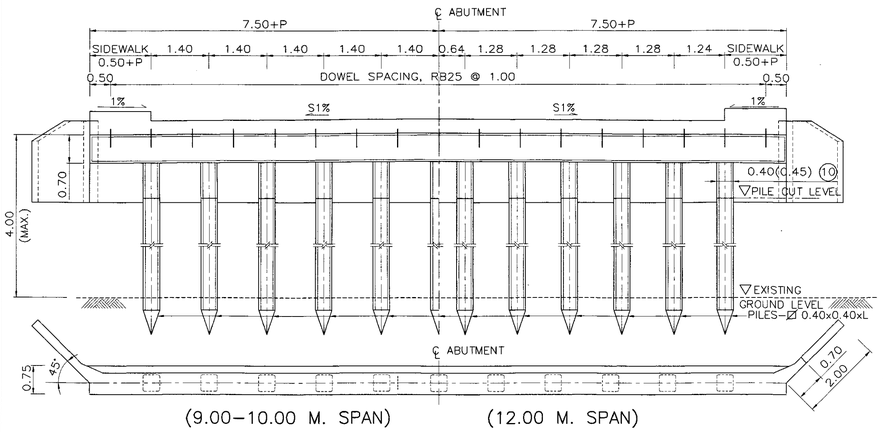

(9.00–10.00 M. SPAN) (12.00 M. SPAN)

ABUTMENT DETAILS (HALF ELEV. & PLAN)
SCALE 1 : 75

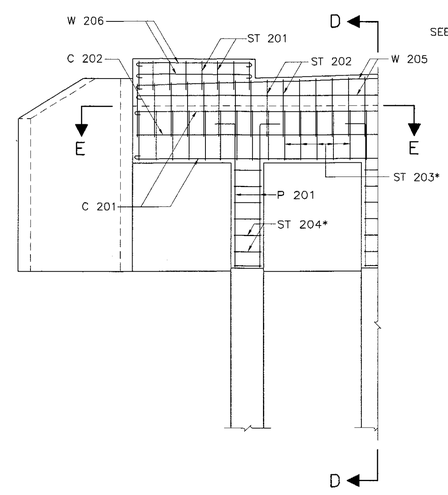

ABUTMENT REINFORCEMENT
SCALE 1 : 50

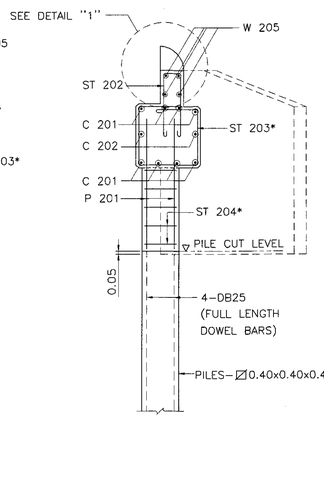

SECTION D – D
SCALE 1 : 50

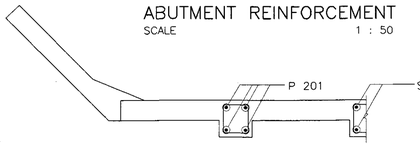

SECTION E – E
SCALE 1 : 50

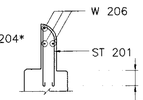

DETAIL "1"
SCALE 1 : 50

NOTES :

1. ALL DIMENSIONS SHOWN ARE IN METERS UNLESS OTHERWISE INDICATED.
2. DESIGN LIVE LOAD : HL–93
3. A MINIMUM ULTIMATE COMPRESSIVE STRENGTH FOR A 150x150x150 MM. CUBET AT 28 DAYS AS FOLLOWS:
   A) FOR PILE BENT/CAP BEAM 35 MPa. (357 KG/CM^2)
   B) FOR ABUTMENT/R.C. DRIVEN PILE 35 MPa. (357 KG/CM^2)
   C) FOR PRECAST DRIVEN PILE 45 MPa. (459 KG/CM^2)
   C) FOR SIDEWALK AND BARRIER 35 MPa. (357 KG/CM^2)
4. REBAR SIZES SMALLER THAN 12 MM. SHALL BE TIS 20 GRADE SR 24 PLAIN ROUND BARS, OTHERS SHALL BE TIS 24 GRADE SD 40 DEFORMED BARS UNLESS OTHERWISE INDICATED.
5. EACH PILE SHALL BE DRIVEN TO A DEPTH WHERE SCOUR WILL NOT AFFECT CAPACITY, THE MINIMUM ALLOWABLE CAPACITY OF 0.50 MM. (50 TON) FOR EACH PILE AND A MINIMUM 3.50 M. EMBEDED LENGTH UNDER A DEPTH ARE REQUIRED
6. HORIZONTAL CROSS BRACING BETWEEN COLUMNS OF PILE BENT SHALL BE PROVIDED AS FOLLOWS:
   A) IF THE DISTANCE FROM EXISTING GROUND LEVEL TO THE BOTTOM OF THE CAP BEAM EXCEED 3.00 M., A BRACING SHALL BE PLACED IN SUCH A WAY THAT THE DISTANCE FROM THE BOTTOM OF THE CAP BEAM TO THE CENTERLINE OF THE BRACING IS NOT MORE THAN 3.00 M.
   B) IF THE DISTANCE BETWEEN THE CENTERLINE OF THE BRACING TO THE EXISTING GROUND LEVEL EXCEED 3.00 M., ADDITIONAL BRACINGS SHALL BE PROVIDED AT AN INTERVAL NOT MORE THAN 3.00 M.
7. *ADJUST SPACING OF STEEL REINFORCEMENT IN TABLE BY @ 0.10 (TYP.) TO RESIST EARTHQUAKE FORCE. (IN CASE OF BRIDGE LOCATED IN SEISMIC LEVEL 1B AND 2)
8. IF THE DISTANCE BETWEEN THE CENTERLINE OF THE BRACING TO THE EXISTING GROUND LEVEL OF ABUTMENT EXCEED 4.00 M., OTHER TYPE OF ABUTMENT AS DWG. NO. PB–309 SHALL BE USED.
9. R = 0.50 M. FOR THE BRIDGE WITHOUT SIDEWALK (P = 0.00). FOR THE BRIDGE WITH SIDEWALK OF P = 0.50 AND 1.00, R = 0.50 M. AND 1.00 M., RESPECTIVELY.

(0.) USING 0.45 WHEN PILE BENT AND BEAM ARE IN SALTWATER

KINGDOM OF THAILAND

MINISTRY OF TRANSPORT
DEPARTMENT OF HIGHWAYS

STANDARD DRAWING

14.00 M. ROADWAY WIDTH SLAB BRIDGE, 0° SKEW
PILE BENT AND ABUTMENT DETAILS

DESIGNED : D.O.H. & CONSULTANTS	**CHECKED :** BUREAU OF LOCATION & DESIGN	**DATE :** OCT 2015	
SUBMITTED : (DIRECTOR OF LOCATION & DESIGN BUREAU)		**SCALE :** AS SHOWN	
APPROVED : (FOR DIRECTOR GENERAL)		**DWG NO.** PB–218	
		SHEET NO. 243/R1	

REV.	REVISION	SIGNATURE	DATE
REV.1	REVISION 1/2017		JUN 2017

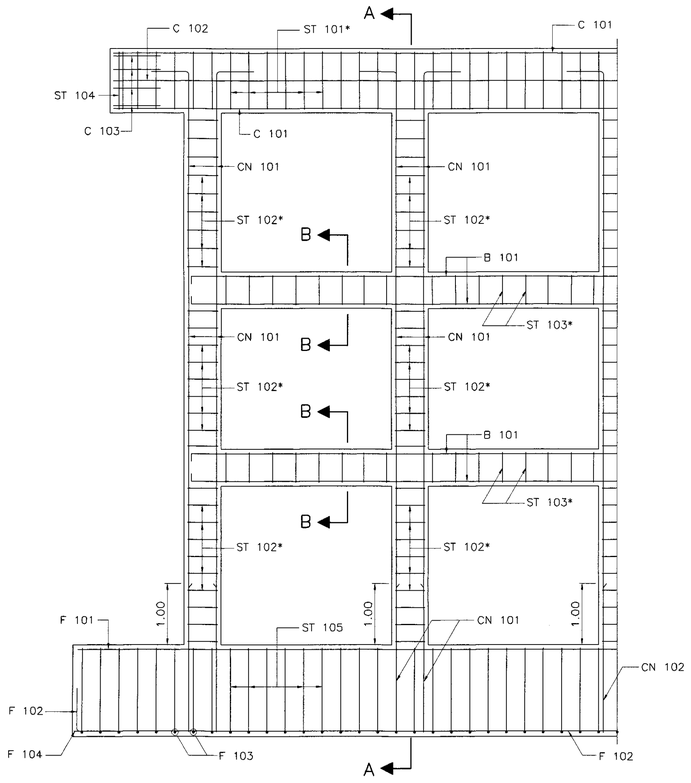

PIER REINFORCEMENT DETAILS
SCALE 1 : 50

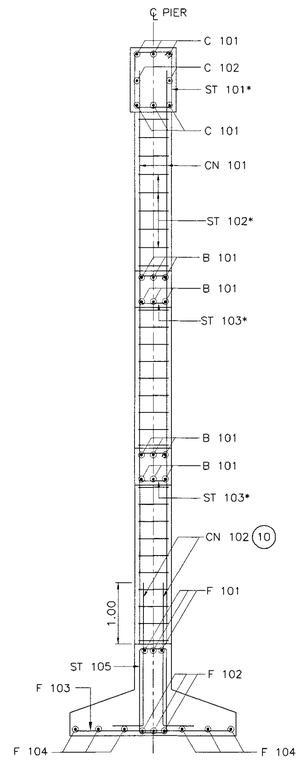

SECTION A – A
SCALE 1 : 50

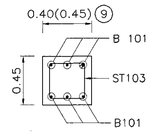

SECTION B – B
SCALE 1 : 25

BAR BENDING DIAGRAMS	No.	BAR MARK	SPAN 5.00 M. REINF.	SPAN 6.00 M. REINF.	SPAN 7.00 M. REINF.	SPAN 8.00 M. REINF.	SPAN 9.00 M. REINF.	SPAN 10.00 M. REINF.	SPAN 12.00 M. REINF.
	①	C 101	6–DB25	6–DB25	6–DB25	6–DB25	6–DB25	6–DB25	6–DB25
	②	C 102	2–DB12	2–DB12	2–DB12	2–DB12	2–DB12	2–DB12	2–DB12
	③	C 103	4–DB12	4–DB12	4–DB12	4–DB12	4–DB12	4–DB12	4–DB12
	④+	CN 101 (LEVEL 1)	4–DB25	4–DB25	4–DB25	4–DB25	4–DB25	4–DB25	4–DB25
		CN 101 (LEVEL 2)	8–DB25	8–DB25	8–DB25	8–DB25	8–DB25	8–DB25	8–DB25
	⑤+	CN 102	4–DB25	4–DB25	4–DB25	4–DB25	4–DB25	4–DB25	4–DB25
	⑥	ST 101	RB9 @ 0.20	RB9 @ 0.20	RB9 @ 0.20	RB9 @ 0.20	RB9 @ 0.20	RB9 @ 0.20	RB9 @ 0.20
	⑦	ST 102	RB9 @ 0.20	RB9 @ 0.20	RB9 @ 0.20	RB9 @ 0.20	RB9 @ 0.20	RB9 @ 0.20	RB9 @ 0.20
	⑧	ST 103	DB12 @ 0.20	DB12 @ 0.20	DB12 @ 0.20	DB12 @ 0.20	DB12 @ 0.20	DB12 @ 0.20	DB12 @ 0.20
	⑨	ST 104	2–RB9	2–RB9	2–RB9	2–RB9	2–RB9	2–RB9	2–RB9
	⑩	ST 105	RB9 @ 0.20	RB9 @ 0.20	RB9 @ 0.20	RB9 @ 0.20	RB9 @ 0.20	RB9 @ 0.20	RB9 @ 0.20
	⑪	B 101	6–DB25	6–DB25	6–DB25	6–DB25	6–DB25	6–DB25	6–DB25
	⑫	F 101	3–DB25	3–DB25	3–DB25	3–DB25	3–DB25	3–DB25	3–DB25
	⑬	F 102	3–DB25	3–DB25	3–DB25	3–DB25	3–DB25	3–DB25	3–DB25
	⑭	F 103	DB25 @ 0.25	DB25 @ 0.25	DB25 @ 0.25	DB25 @ 0.25	DB25 @ 0.25	DB25 @ 0.25	DB25 @ 0.25
	⑮	F 104	6–DB25	6–DB25	6–DB25	6–DB25	6–DB25	6–DB25	6–DB25

REMARK : ④+,⑤+ = REINFORCEMENT NUMBERS OF CN 101 AND CN 102 ARE SHOWN PER COLUMN RELEVANT TO SEISMIC LEVEL 1 (1A OR 1B) AND 2

NOTES :

1. ALL DIMENSIONS SHOWN ARE IN METERS UNLESS OTHERWISE INDICATED.
2. DESIGN LIVE LOAD : HL–93
3. A MINIMUM ULTIMATE COMPRESSIVE STRENGTH FOR A 150x150x150 MM. CUBE AT 28 DAYS AS FOLLOWS:
   A) FOR PILE BENT/CAP BEAM 35 MPa. (357 KG/CM^2)
   B) FOR FOOTING 35 MPa. (357 KG/CM^2)
   C) FOR SIDEWALK AND BARRIER 35 MPa. (357 KG/CM^2)
4. REBAR SIZES SMALLER THAN 12 MM. SHALL BE TIS 20 GRADE SR 24 PLAIN ROUND BARS, OTHERS SHALL BE TIS 24 GRADE SD 40 DEFORMED BARS UNLESS OTHERWISE INDICATED.
5. EACH SPREAD FOOTING SHALL BE LOCATED BELOW TO A DEPTH WHERE SCOUR WILL NOT AFFECT CAPACITY, THE MINIMUM ALLOWABLE BEARING CAPACITY OF 0.20 MPa (20 TON/M^2)
6. HORIZONTAL CROSS BRACING BETWEEN COLUMNS OF PILE BENT SHALL BE PROVIDED AS FOLLOWS:
   A) IF THE DISTANCE FROM EXISTING GROUND LEVEL TO THE BOTTOM OF THE CAP BEAM EXCEED 3.00 M., A BRACING SHALL BE PLACED IN SUCH A WAY THAT THE DISTANCE FROM THE BOTTOM OF THE CAP BEAM TO THE CENTERLINE OF THE BRACING IS NOT MORE THAN 3.00 M.
   B) IF THE DISTANCE BETWEEN THE CENTERLINE OF THE BRACING TO THE EXISTING GROUND LEVEL EXCEED 3.00 M., ADDITIONAL BRACINGS SHALL BE PROVIDED AT AN INTERVAL NOT MORE THAN 3.00 M.
7. *ADJUST SPACING OF STEEL REINFORCEMENT IN TABLE BY @ 0.10 (TYP.) TO RESIST EARTHQUAKE FORCE. (IN CASE OF BRIDGE LOCATED IN SEISMIC LEVEL 1B AND 2)
8. R = 0.50 M. FOR THE BRIDGE WITHOUT SIDEWALK (P = 0.00). FOR THE BRIDGE WITH SIDEWALK OF P = 0.50 AND 1.00, R = 0.50 M. AND 1.00 M., RESPECTIVELY.
9. USING 0.45 WHEN PILE BENT AND BEAM ARE IN SALTWATER
10. LAP SPLICE OF MAIN REINFORCING BAR IS NOT PERMITTED FOR SEISMIC LEVEL 1B AND 2

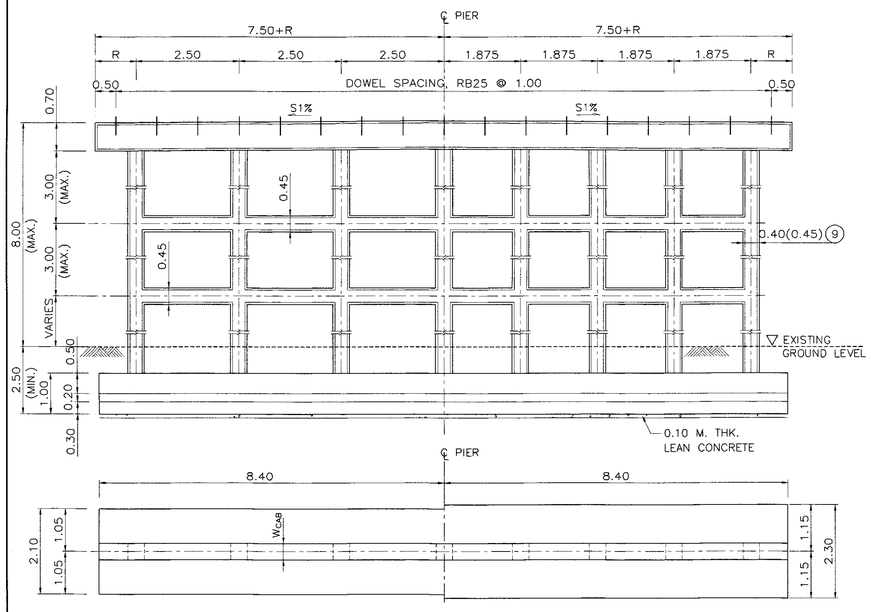

(5.00–6.00 M. SPAN) (7.00–8.00 M. SPAN)

PIER DETAILS (HALF ELEV. & PLAN)
SCALE 1 : 75

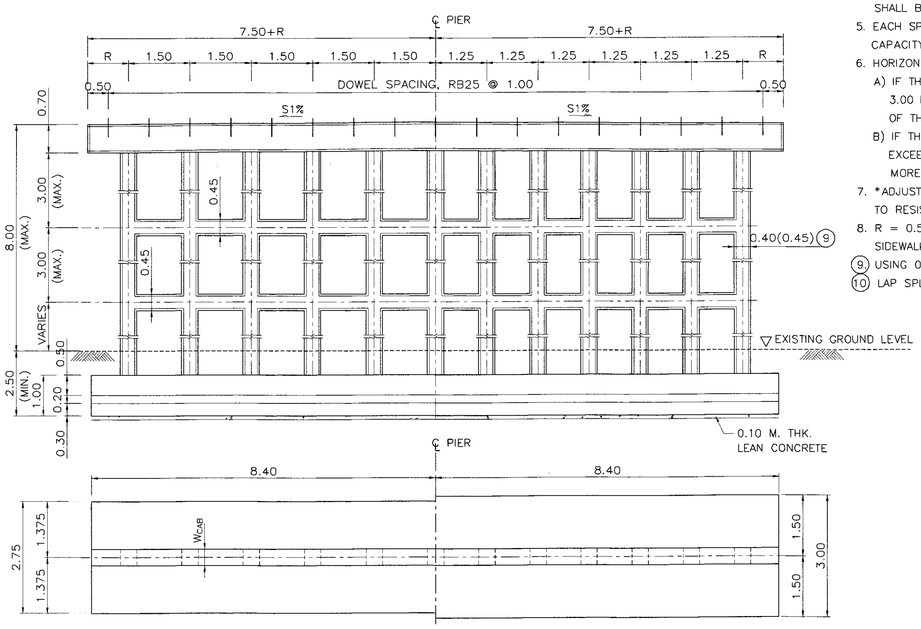

(9.00–10.00 M. SPAN) (12.00 M. SPAN)

PIER DETAILS (HALF ELEV. & PLAN)
SCALE 1 : 75

REV.	REVISION	SIGNATURE	DATE
REV.1	REVISION 1/2017		JUN 2017

KINGDOM OF THAILAND

MINISTRY OF TRANSPORT
DEPARTMENT OF HIGHWAYS

STANDARD DRAWING
15.00 M. ROADWAY WIDTH SLAB BRIDGE, 0° SKEW
SPREAD FOOTING PIER DETAIL

DESIGNED : D.O.H. & CONSULTANTS	**CHECKED :** BUREAU OF LOCATION & DESIGN	**DATE :** OCT 2015
SUBMITTED : (DIRECTOR OF LOCATION & DESIGN BUREAU)		**SCALE :** AS SHOWN
APPROVED : (FOR DIRECTOR GENERAL)		**DWG NO.** PB–219
		SHEET NO. 244/RI

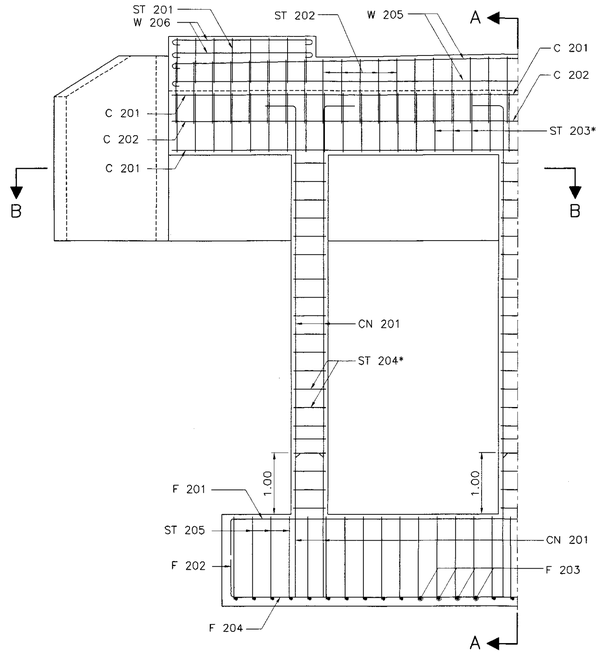

ABUTMENT REINFORCEMENT DETAILS
SCALE 1 : 50

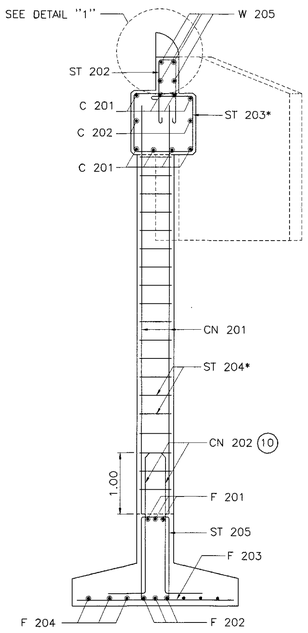

SECTION A – A
SCALE 1 : 50

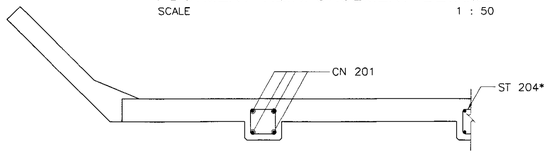

SECTION B – B
SCALE 1 : 50

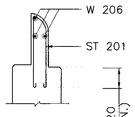

DETAIL "1"
SCALE 1 : 25

TABLE OF REINFORCEMENT								
BAR BENDING DIAGRAMS	No.	BAR MARK	SPAN 5.00 M. REINF.	SPAN 6.00 M. REINF.	SPAN 7.00 M. REINF.	SPAN 8.00 M. REINF.	SPAN 9.00 M. REINF.	SPAN 10.00 MM. REINF.	SPAN 12.00 M. REINF.
	(1)	C 201	8–DB25	8–DB25	8–DB25	8–DB25	8–DB25	8–DB25	8–DB25
	(2)	C 202	2–DB12	2–DB12	2–DB12	2–DB12	2–DB12	2–DB12	2–DB12
	(3)	ST 201	RB9 @ 0.20	RB9 @ 0.20	RB9 @ 0.20	RB9 @ 0.20	RB9 @ 0.20	RB9 @ 0.20	RB9 @ 0.20
	(4)	ST 202	RB9 @ 0.20	RB9 @ 0.20	RB9 @ 0.20	RB9 @ 0.20	RB9 @ 0.20	RB9 @ 0.20	RB9 @ 0.20
	(5)	ST 203	RB9 @ 0.20	RB9 @ 0.20	RB9 @ 0.20	RB9 @ 0.20	RB9 @ 0.20	RB9 @ 0.20	RB9 @ 0.20
	(6)	ST 204	RB9 @ 0.20	RB9 @ 0.20	RB9 @ 0.20	RB9 @ 0.20	RB9 @ 0.20	RB9 @ 0.20	RB9 @ 0.20
	(7)	ST 205	RB9 @ 0.20	RB9 @ 0.20	RB9 @ 0.20	RB9 @ 0.20	RB9 @ 0.20	RB9 @ 0.20	RB9 @ 0.20
	(8)+	CN 201 (LEVEL 1)	4–DB25	4–DB25	4–DB25	4–DB25	4–DB25	4–DB25	4–DB25
		CN 201 (LEVEL 2)	8–DB25	8–DB25	8–DB25	8–DB25	8–DB25	8–DB25	8–DB25
	(9)+	CN 202	4–DB25	4–DB25	4–DB25	4–DB25	4–DB25	4–DB25	4–DB25
	(10)	F 201	3–DB25	3–DB25	3–DB25	3–DB25	3–DB25	3–DB25	3–DB25
	(11)	F 202	3–DB25	3–DB25	3–DB25	3–DB25	3–DB25	3–DB25	3–DB25
	(12)	F 203	DB25 @ 0.25	DB25 @ 0.25	DB25 @ 0.25	DB25 @ 0.25	DB25 @ 0.25	DB25 @ 0.25	DB25 @ 0.25
	(13)	F 204	6–DB25	6–DB25	6–DB25	6–DB25	6–DB25	6–DB25	6–DB25
	(14)	W 205	4–DB12	4–DB12	4–DB12	4–DB12	4–DB12	4–DB12	4–DB12
	(15)	W 206	3–DB12	3–DB12	3–DB12	3–DB12	3–DB12	3–DB12	3–DB12

REMARK : IF THE DISTANCE BETWEEN THE CENTERLINE OF THE BRACING TO THE EXISTING GROUND LEVEL OF ABUTMENT EXCEED 4.00 M., OTHER TYPE OF ABUTMENT AS DWG. NO. PB–310 SHALL BE USED, (8)+(9)+ REINFORCEMENT NUMBERS OF CN 201 AND CN 202 ARE SHOWN PER COLUMN RELEVANT TO SEISMIC LEVEL 1 (1A OR 1B) AND 2.

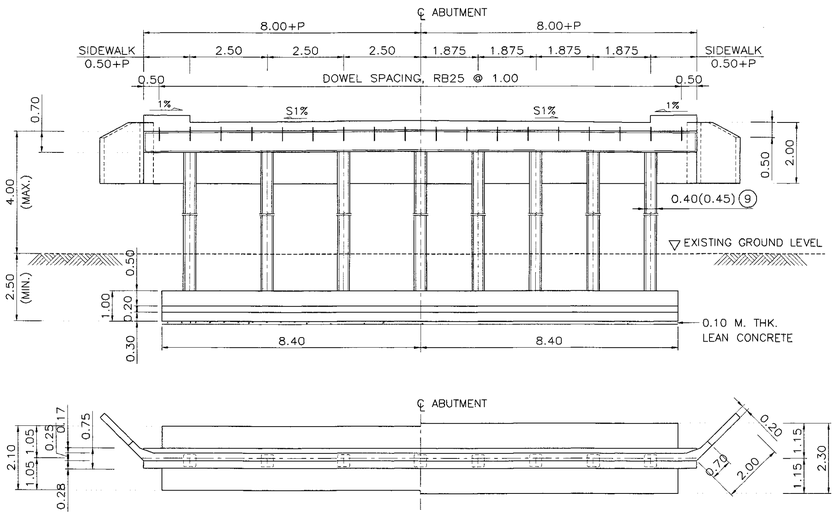

(5.00–6.00 M. SPAN) (7.00–8.00 M. SPAN)

ABUTMENT DETAILS (HALF ELEV. & PLAN)
SCALE 1 : 100

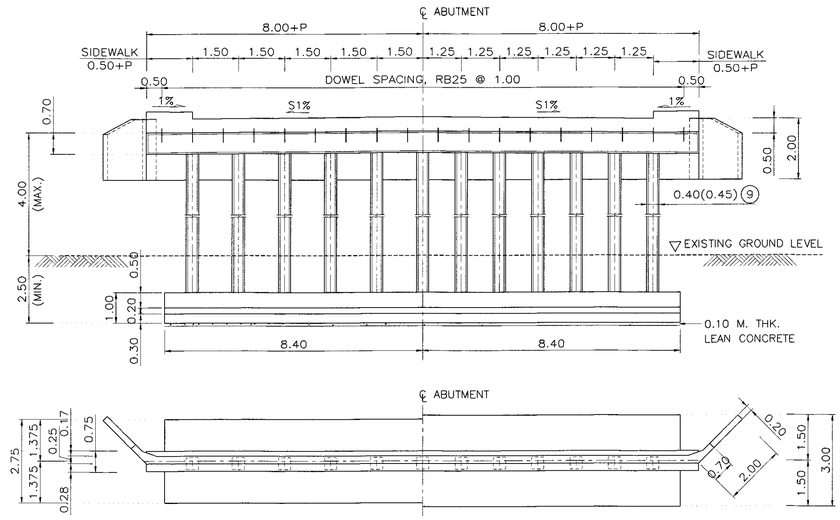

(9.00–10.00 M. SPAN) (12.00 M. SPAN)

ABUTMENT DETAILS (HALF ELEV. & PLAN)
SCALE 1 :100

NOTES :

1. ALL DIMENSIONS SHOWN ARE IN METERS UNLESS OTHERWISE INDICATED.
2. DESIGN LIVE LOAD : HL–93
3. A MINIMUM ULTIMATE COMPRESSIVE STRENGTH FOR A 150x150x150 MM. CUBE AT 28 DAYS AS FOLLOWS:
   A) FOR ABUTMENT AND WINGWALL 35 MPa. (357 KG/CM^2)
   B) FOR FOOTING 35 MPa. (357 KG/CM^2)
   C) FOR SIDEWALK AND BARRIER 35 MPa. (357 KG/CM^2)
4. REBAR SIZES SMALLER THAN 12 MM. SHALL BE TIS 20 GRADE SR 24 PLAIN ROUND BARS, OTHERS SHALL BE TIS 24 GRADE SD 40 DEFORMED BARS UNLESS OTHERWISE INDICATED.
5. EACH SPREAD FOOTING SHALL BE LOCATED BELOW TO A DEPTH WHERE SCOUR WILL NOT AFFECT CAPACITY, THE MINIMUM ALLOWABLE BEARING CAPACITY OF 0.20 MPa (20 TON/M$_2$)
6. HORIZONTAL CROSS BRACING BETWEEN COLUMNS OF PILE BENT SHALL BE PROVIDED AS FOLLOWS:
   A) IF THE DISTANCE FROM EXISTING GROUND LEVEL TO THE BOTTOM OF THE CAP BEAM EXCEED 3.00 M., A BRACING SHALL BE PLACED IN SUCH A WAY THAT THE DISTANCE FROM THE BOTTOM OF THE CAP BEAM TO THE CENTERLINE OF THE BRACING IS NOT MORE THAN 3.00 M.
   B) IF THE DISTANCE BETWEEN THE CENTERLINE OF THE BRACING TO THE EXISTING GROUND LEVEL EXCEED 3.00 M., ADDITIONAL BRACINGS SHALL BE PROVIDED AT AN INTERVAL NOT MORE THAN 3.00 M.
7. R = 0.50 M. FOR THE BRIDGE WITHOUT SIDEWALK (P = 0.00). FOR THE BRIDGE WITH SIDEWALK OF P = 0.50 AND 1.00, R = 0.50 M. AND 1.00 M., RESPECTIVELY.
8. *ADJUST SPACING OF STEEL REINFORCEMENT IN TABLE BY @ 0.10 (TYP.) TO RESIST EARTHQUAKE FORCE. (IN CASE OF BRIDGE LOCATED IN SEISMIC LEVEL 1B AND 2)

(9) USING 0.45 WHEN PILE BENT AND BEAM ARE IN SALTWATER

(10) LAP SPLICE OF MAIN REINFORCING BAR IS NOT PERMITTED FOR SEISMIC LEVEL 1B AND 2

REV.1	REVISION 1/2017		JUN 2017	
REV.	REVISION		SIGNATURE	DATE

KINGDOM OF THAILAND
MINISTRY OF TRANSPORT
DEPARTMENT OF HIGHWAYS

STANDARD DRAWING
15.00 M. ROADWAY WIDTH SLAB BRIDGE, 0° SKEW
SPREAD FOOTING ABUTMENT DETAIL

DESIGNED : D.O.H. & CONSULTANTS	**CHECKED :** BUREAU OF LOCATION & DESIGN	**DATE :** OCT 2015
SUBMITTED : (DIRECTOR OF LOCATION & DESIGN BUREAU)		**SCALE :** AS SHOWN
APPROVED : (FOR DIRECTOR GENERAL)		**DWG NO.** PB–220
		SHEET NO. 245/R1

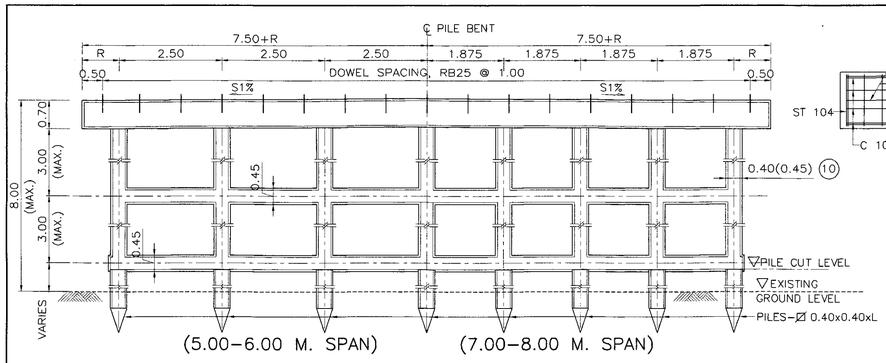

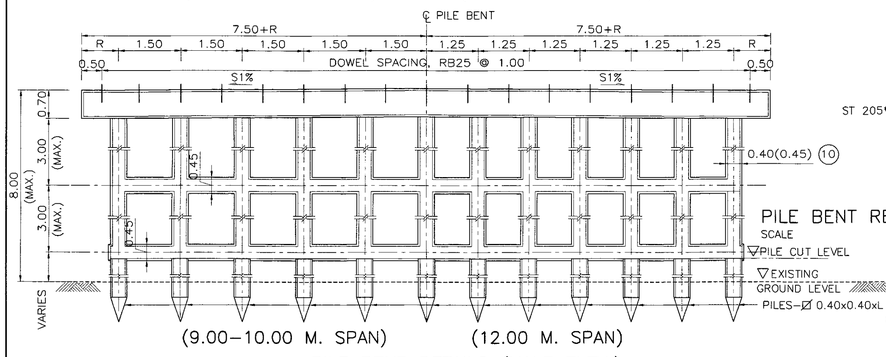

PILE BENT DETAILS (HALF ELEV.)
SCALE 1 : 75

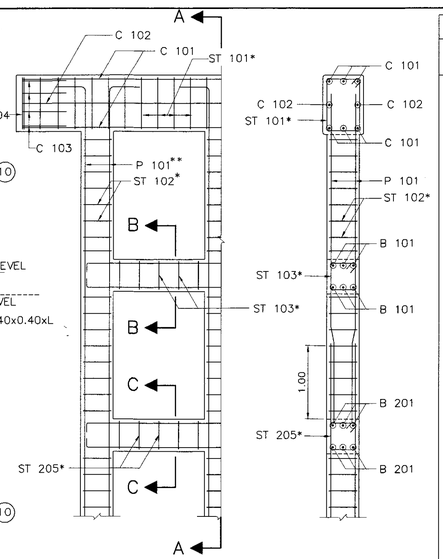

PILE BENT REINFORCEMENT DETAIL SECTION A – A
SCALE 1 : 50 SCALE 1 : 50

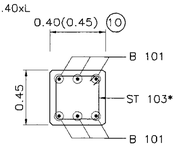

SECTION B – B
SCALE 1 : 25

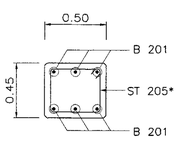

SECTION C – C
SCALE 1 : 25

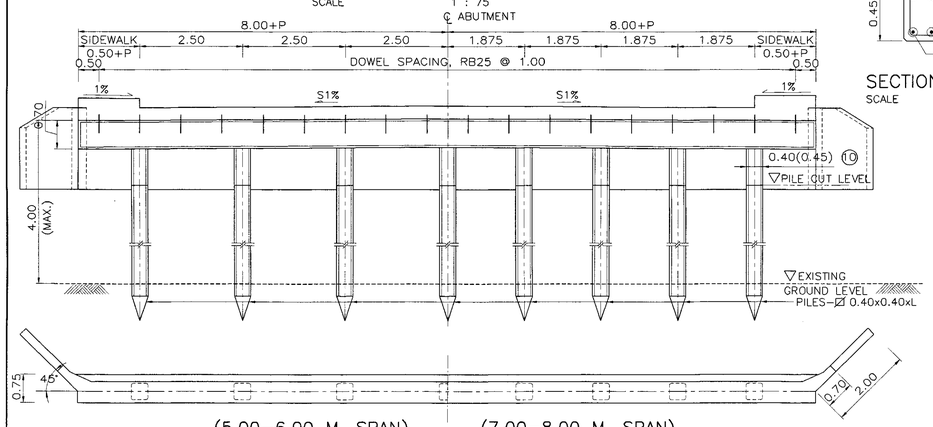

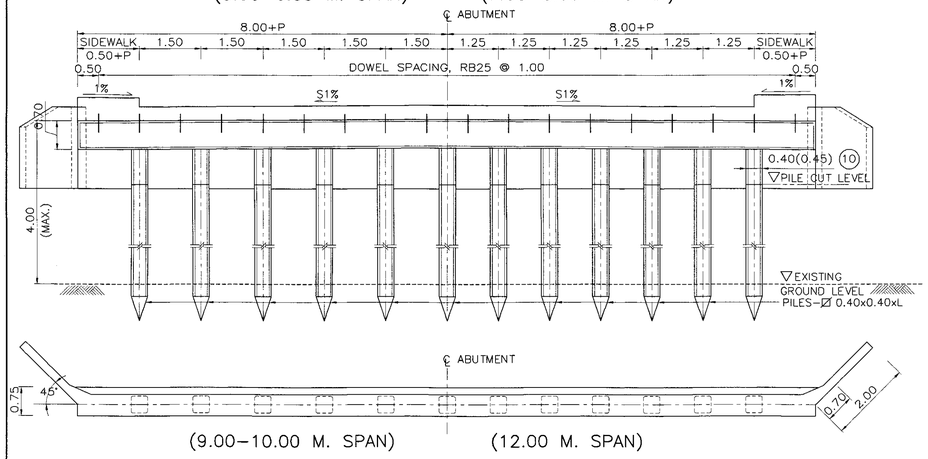

ABUTMENT DETAILS (HALF ELEV. & PLAN)
SCALE 1 : 75

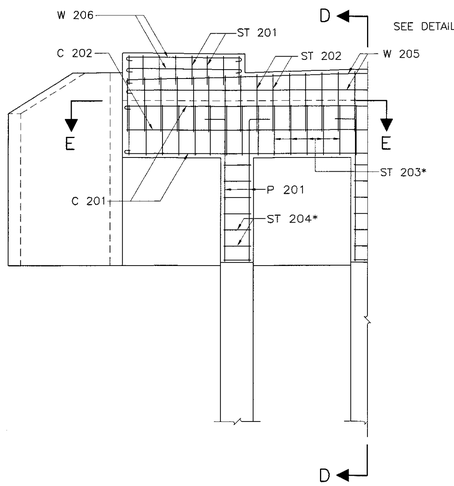

ABUTMENT REINFORCEMENT
SCALE 1 : 50

SECTION D – D
SCALE 1 : 50

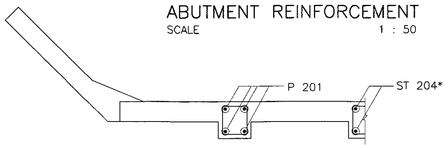

SECTION E – E
SCALE 1 : 50

DETAIL "1"
SCALE 1 : 50

TABLE OF REINFORCEMENT

BAR BENDING DIAGRAMS	No.	BAR MARK	SPAN 5.00 M. REINF.	SPAN 6.00 M. REINF.	SPAN 7.00 M. REINF.	SPAN 8.00 M. REINF.	SPAN 9.00 M. REINF.	SPAN 10.00 M. REINF.	SPAN 12.00 M. REINF.
	①	C 101	6–DB25	6–DB25	6–DB25	6–DB25	6–DB25	6–DB25	6–DB25
	②	C 102	2–DB12	2–DB12	2–DB12	2–DB12	2–DB12	2–DB12	2–DB12
	③	C 103	4–DB12	4–DB12	4–DB12	4–DB12	4–DB12	4–DB12	4–DB12
	④	ST 101	RB9 @ 0.20	RB9 @ 0.20	RB9 @ 0.20	RB9 @ 0.20	RB9 @ 0.20	RB9 @ 0.20	RB9 @ 0.20
	⑤	ST 102	RB9 @ 0.20	RB9 @ 0.20	RB9 @ 0.20	RB9 @ 0.20	RB9 @ 0.20	RB9 @ 0.20	RB9 @ 0.20
	⑥	ST 103	DB12 @ 0.20	DB12 @ 0.20	DB12 @ 0.20	DB12 @ 0.20	DB12 @ 0.20	DB12 @ 0.20	DB12 @ 0.20
	⑦	ST 104	2–RB9	2–RB9	2–RB9	2–RB9	2–RB9	2–RB9	2–RB9
	⑧	B 101	6–DB25	6–DB25	6–DB25	6–DB25	6–DB25	6–DB25	6–DB25
	⑨+	P 101 (LEVEL 1)	4–DB25	4–DB25	4–DB25	4–DB25	4–DB25	4–DB25	4–DB25
		P 101 (LEVEL 2)	8–DB25	8–DB25	8–DB25	8–DB25	8–DB25	8–DB25	8–DB25
	⑩	C 201	8–DB25	8–DB25	8–DB25	8–DB25	8–DB25	8–DB25	8–DB25
	⑪	C 202	2–DB12	2–DB12	2–DB12	2–DB12	2–DB12	2–DB12	2–DB12
	⑫	ST 201	RB9 @ 0.20	RB9 @ 0.20	RB9 @ 0.20	RB9 @ 0.20	RB9 @ 0.20	RB9 @ 0.20	RB9 @ 0.20
	⑬	ST 202	RB9 @ 0.20	RB9 @ 0.20	RB9 @ 0.20	RB9 @ 0.20	RB9 @ 0.20	RB9 @ 0.20	RB9 @ 0.20
	⑭	ST 203	RB9 @ 0.20	RB9 @ 0.20	RB9 @ 0.20	RB9 @ 0.20	RB9 @ 0.20	RB9 @ 0.20	RB9 @ 0.20
	⑮	ST 204	RB9 @ 0.20	RB9 @ 0.20	RB9 @ 0.20	RB9 @ 0.20	RB9 @ 0.20	RB9 @ 0.20	RB9 @ 0.20
	⑯	ST 205	DB12 @ 0.20	DB12 @ 0.20	DB12 @ 0.20	DB12 @ 0.20	DB12 @ 0.20	DB12 @ 0.20	DB12 @ 0.20
	⑰	B 201	6–DB25	6–DB25	6–DB25	6–DB25	6–DB25	6–DB25	6–DB25
	⑱+	P 201 (LEVEL 1)	4–DB25	4–DB25	4–DB25	4–DB25	4–DB25	4–DB25	4–DB25
		P 201 (LEVEL 2)	8–DB25	8–DB25	8–DB25	8–DB25	8–DB25	8–DB25	8–DB25
	⑲	4–DB12	4–DB12	4–DB12	4–DB12	4–DB12	4–DB12	4–DB12	4–DB12
	⑳	W 206	3–DB12	3–DB12	3–DB12	3–DB12	3–DB12	3–DB12	3–DB12

REMARK : ⑨+, ⑱+ = REINFORCEMENT NUMBERS OF P 101 AND P 201 ARE SHOWN PER COLUMN RELEVANT TO SEISMIC LEVEL 1 (1A OR 1B) AND 2

NOTES :

1. ALL DIMENSIONS SHOWN ARE IN METERS UNLESS OTHERWISE INDICATED.
2. DESIGN LIVE LOAD : HL–93
3. A MINIMUM ULTIMATE COMPRESSIVE STRENGTH FOR A 150x150x150 MM. CUBE AT 28 DAYS AS FOLLOWS:
   A) FOR PILE BENT/CAP BEAM 35 MPa. (357 KG/CM^2)
   B) FOR ABUTMENT/R.C. DRIVEN PILE 35 MPa. (357 KG/CM^2)
   C) FOR PRECAST DRIVEN PILE 45 MPa. (459 KG/CM^2)
   C) FOR SIDEWALK AND BARRIER 35 MPa. (357 KG/CM^2)
4. REBAR SIZES SMALLER THAN 12 MM. SHALL BE TIS 20 GRADE SR 24 PLAIN ROUND BARS, OTHERS SHALL BE TIS 24 GRADE SD 40 DEFORMED BARS UNLESS OTHERWISE INDICATED.
5. EACH PILE SHALL BE DRIVEN TO A DEPTH WHERE SCOUR WILL NOT AFFECT CAPACITY, THE MINIMUM ALLOWABLE CAPACITY OF 0.50 MN (50 TON) FOR EACH PILE AND A MINIMUM 3.50 M. EMBEDED LENGTH UNDER A DEPTH ARE REQUIRED
6. HORIZONTAL CROSS BRACING BETWEEN COLUMNS OF PILE BENT SHALL BE PROVIDED AS FOLLOWS:
   A) IF THE DISTANCE FROM EXISTING GROUND LEVEL TO THE BOTTOM OF THE CAP BEAM EXCEED 3.00 M., A BRACING SHALL BE PLACED IN SUCH A WAY THAT THE DISTANCE FROM THE BOTTOM OF THE CAP BEAM TO THE CENTERLINE OF THE BRACING IS NOT MORE THAN 3.00 M.
   B) IF THE DISTANCE BETWEEN THE CENTERLINE OF THE BRACING TO THE EXISTING GROUND LEVEL EXCEED 3.00 M., ADDITIONAL BRACINGS SHALL BE PROVIDED AT AN INTERVAL NOT MORE THAN 3.00 M.
7. *ADJUST SPACING OF STEEL REINFORCEMENT IN TABLE BY @ 0.10 (TYP.) TO RESIST EARTHQUAKE FORCE. (IN CASE OF BRIDGE LOCATED IN SEISMIC LEVEL 1B AND 2)
8. IF THE DISTANCE BETWEEN THE CENTERLINE OF THE BRACING TO THE EXISTING GROUND LEVEL OF ABUTMENT EXCEED 4.00 M., OTHER TYPE OF ABUTMENT AS DWG. NO. PB–309 SHALL BE USED.
9. R = 0.50 M. FOR THE BRIDGE WITHOUT SIDEWALK (P = 0.00). FOR THE BRIDGE WITH SIDEWALK OF P = 0.50 AND 1.00, R = 0.50 M. AND 1.00 M., RESPECTIVELY.
10. USING 0.45 WHEN PILE BENT AND BEAM ARE IN SALTWATER

KINGDOM OF THAILAND

MINISTRY OF TRANSPORT
DEPARTMENT OF HIGHWAYS

STANDARD DRAWING

15.00 M. ROADWAY WIDTH SLAB BRIDGE, 0° SKEW

PILE BENT AND ABUTMENT DETAILS

DESIGNED : D.O.H. & CONSULTANTS	**CHECKED :** BUREAU OF LOCATION & DESIGN	**DATE :** OCT 2015	
SUBMITTED : (DIRECTOR OF LOCATION & DESIGN BUREAU)		**SCALE :** AS SHOWN	
APPROVED : (FOR DIRECTOR GENERAL)		**DWG NO.** PB–221	
		SHEET NO. 246/R1	

REV.	REVISION	SIGNATURE	DATE
REV.1	REVISION 1/2017		JUN 2017

TABLE OF PIER DIMENSIONS

ROADWAY WIDTH M.	LENGTH OF CAP BEAM A SEC θ M.	DOWEL SPACING B SEC θ M.	SPAN 5.00 M. COL SPG. C SEC θ M.	SPAN 5.00 M. NO.OF COLUMN	SPAN 6.00 M. COL SPG. C SEC θ M.	SPAN 6.00 M. NO.OF COLUMN	SPAN 7.00 M. COL SPG. C SEC θ M.	SPAN 7.00 M. NO.OF COLUMN	SPAN 8.00 M. COL SPG. C SEC θ M.	SPAN 8.00 M. NO.OF COLUMN	SPAN 9.00 M. COL SPG. C SEC θ M.	SPAN 9.00 M. NO.OF COLUMN	SPAN 10.00 M. COL SPG. C SEC θ M.	SPAN 10.00 M. NO.OF COLUMN	SPAN 12.00 M. COL SPG. C SEC θ M.	SPAN 12.00 M. NO.OF COLUMN
9.00	(9.00 + 2R) SEC θ	1.00 SEC θ	3.00 SEC θ	4	3.00 SEC θ	4	2.25 SEC θ	5	2.25 SEC θ	5	1.50 SEC θ	7	1.50 SEC θ	7	(1.25–1.30) SEC θ	8
10.00	(10.00 + 2R) SEC θ	1.00 SEC θ	2.50 SEC θ	5	2.50 SEC θ	5	2.00 SEC θ	6	2.00 SEC θ	6	(1.42–1.45) SEC θ	8	(1.42–1.45) SEC θ	8	1.25 SEC θ	9
11.00	(11.00 + 2R) SEC θ	1.00 SEC θ	2.75 SEC θ	5	2.75 SEC θ	5	(1.80–1.85) SEC θ	7	(1.80–1.85) SEC θ	7	(1.56–1.60) SEC θ	8	(1.56–1.60) SEC θ	8	1.375 SEC θ	9
12.00	(12.00 + 2R) SEC θ	1.00 SEC θ	2.40 SEC θ	6	2.40 SEC θ	6	2.00 SEC θ	7	2.00 SEC θ	7	1.50 SEC θ	9	1.50 SEC θ	9	(1.31–1.34) SEC θ	10
13.00	(13.00 + 2R) SEC θ	1.00 SEC θ	2.60 SEC θ	6	2.60 SEC θ	6	(1.85–1.86) SEC θ	8	(1.85–1.86) SEC θ	8	(1.44–1.46) SEC θ	10	(1.44–1.46) SEC θ	10	1.30 SEC θ	11
14.00	(14.00 + 2R) SEC θ	1.00 SEC θ	(2.30–2.40) SEC θ	7	(2.30–2.40) SEC θ	7	2.00 SEC θ	8	2.00 SEC θ	8	1.40 SEC θ	11	1.40 SEC θ	11	(1.24–1.28) SEC θ	12
15.00	(15.00 + 2R) SEC θ	1.00 SEC θ	2.50 SEC θ	7	2.50 SEC θ	7	1.875 SEC θ	9	1.875 SEC θ	9	1.50 SEC θ	11	1.50 SEC θ	11	1.25 SEC θ	13

REMARK : R = 0.50 AND 1.00 M. FOR THE BRIDGE WITHOUT SIDEWALK AND WITH SIDEWALK, RESPECTIVELY.

TABLE OF FOOTING DIMENSIONS

ROADWAY WIDTH M.	LENGTH OF FOOTING D SEC θ , M.	WIDTH OF FOOTING, E SPAN 5.00–6.00 M.	SPAN 7.00–8.00 M.	SPAN 9.00–10.00 M.	SPAN 12.00 M.
9.00	11.80 SEC θ	2.50	2.75	3.00	3.50
10.00	12.80 SEC θ	2.50	2.75	3.00	3.50
11.00	13.80 SEC θ	2.50	2.75	3.00	3.50
12.00	14.80 SEC θ	2.50	2.75	3.00	3.50
13.00	15.80 SEC θ	2.50	2.75	3.00	3.50
14.00	16.80 SEC θ	2.50	2.75	3.00	3.50
15.00	17.80 SEC θ	2.50	2.75	3.00	3.50

TABLE OF CAPBEAM WIDTH (W_{CAB})

CAP–BEAM WIDTH (W_{CAB})	CENTER TO CENTER SPAN (M.) 5.00	6.00	7.00	8.00	9.00	10.00	12.00
0 ° ≤ SKEW ≤ 25°	0.50	0.50	0.50	0.50	0.50	0.50	0.50
25° < SKEW ≤ 45°	0.55	0.55	0.55	0.60	0.60	0.60	0.60

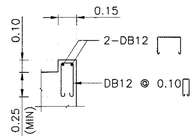

DETAIL "A"
SCALE 1 : 25

TABLE OF REINFORCEMENT

BAR BENDING DIAGRAMS	No.	BAR MARK	SPAN 5.00 M. REINF.	SPAN 6.00 M. REINF.	SPAN 7.00 M. REINF.	SPAN 8.00 M. REINF.	SPAN 9.00 M. REINF.	SPAN 10.00 M. REINF.	SPAN 12.00 M. REINF.
	①	C 101	6–DB25	6–DB25	6–DB25	6–DB25	6–DB25	8–DB25	8–DB25
	②	C 102	2–DB12	2–DB12	2–DB12	2–DB12	2–DB12	2–DB12	2–DB12
	③	C 103	4–DB12	4–DB12	4–DB12	4–DB12	4–DB12	4–DB12	4–DB12
	④+	CN 101 (LEVEL 1)	4–DB25	4–DB25	4–DB25	4–DB25	4–DB25	4–DB25	4–DB25
		CN 101 (LEVEL 2)	8–DB25	8–DB25	8–DB25	8–DB25	8–DB25	8–DB25	8–DB25
	⑤+	CN 102	4–DB25	4–DB25	4–DB25	4–DB25	4–DB25	4–DB25	4–DB25
	⑥	ST 101	RB9 @ 0.20	RB9 @ 0.20	RB9 @ 0.20	RB9 @ 0.20	RB9 @ 0.20	RB9 @ 0.20	RB9 @ 0.20
	⑦	ST 102	RB9 @ 0.20	RB9 @ 0.20	RB9 @ 0.20	RB9 @ 0.20	RB9 @ 0.20	RB9 @ 0.20	RB9 @ 0.20
	⑧	ST 103	DB12 @ 0.20	DB12 @ 0.20	DB12 @ 0.20	DB12 @ 0.20	DB12 @ 0.20	DB12 @ 0.20	DB12 @ 0.20
	⑨	ST 104	2–RB9	2–RB9	2–RB9	2–RB9	2–RB9	2–RB9	2–RB9
	⑩	ST 105	2–RB9	2–RB9	2–RB9	2–RB9	2–RB9	2–RB9	2–RB9
	⑪	B 101	8–DB25	8–DB25	8–DB25	8–DB25	8–DB25	8–DB25	8–DB25
	⑫	F 101	DB12 @ 0.20	DB12 @ 0.20	DB12 @ 0.20	DB12 @ 0.20	DB12 @ 0.20	DB12 @ 0.20	DB12 @ 0.20
	⑬	F 102	DB20 @ 0.20	DB20 @ 0.20	DB20 @ 0.20	DB12 @ 0.20	DB12 @ 0.20	DB20 @ 0.20	DB20 @ 0.20
	⑭	F 103	DB12 @ 0.20	DB12 @ 0.20	DB12 @ 0.20	DB12 @ 0.20	DB12 @ 0.20	DB12 @ 0.20	DB12 @ 0.20
	⑮	F 104	DB25 @ 0.20	DB25 @ 0.20	DB25 @ 0.20	DB25 @ 0.20	DB25 @ 0.20	DB25 @ 0.20	DB25 @ 0.20

REMARK : ④+,⑤+ = REINFORCEMENT NUMBERS OF CN 101 AND CN 102 ARE SHOWN PER COLUMN RELEVANT TO SEISMIC LEVEL 1 (1A OR 1B) AND 2

TABLE OF SEC θ

θ , DEGREE	0	5	10	15	20	25	30	35	40	45
SEC θ	1.0000	1.0038	1.0154	1.0353	1.0642	1.1034	1.1547	1.2208	1.3054	1.4142

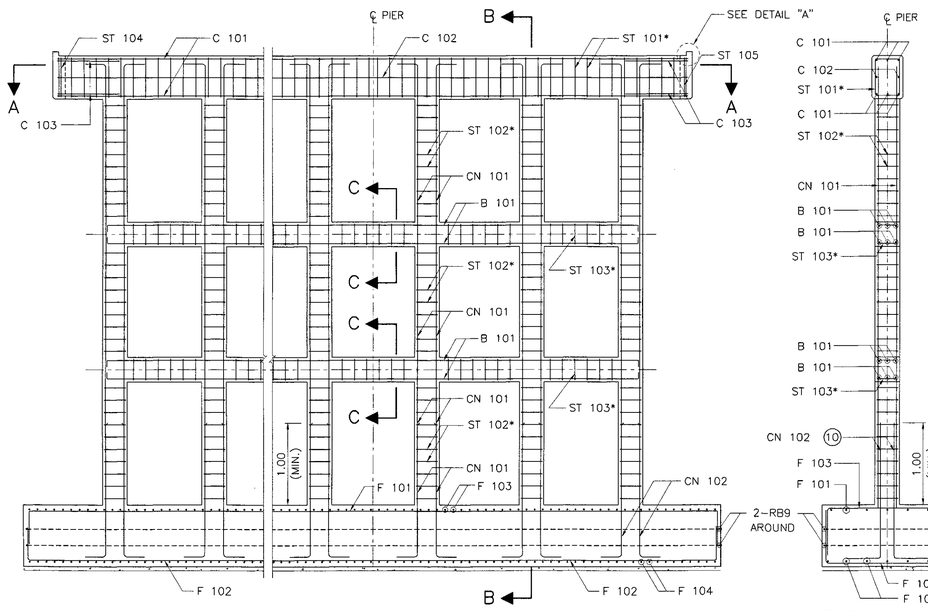

ELEVATION
SCALE 1 : 75

SECTION B – B
SCALE 1 : 75

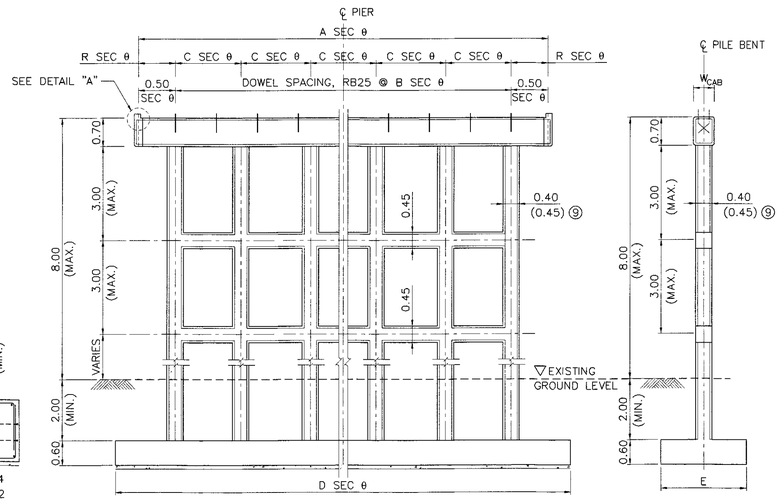

TRANSVERSE ELEVATION & LONGITUDINAL ELEVATION
SCALE 1 : 100

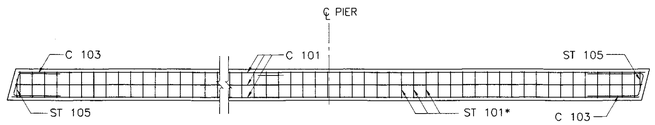

SECTION A – A

REINFORCEMENT DETAILS
SCALE 1 : 75

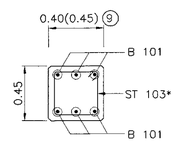

SECTION C – C
SCALE 1 : 25

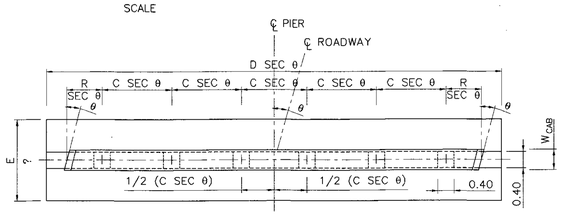

PLAN

PIER DETAILS
SCALE 1 : 75

NOTES :

1. ALL DIMENSIONS SHOWN ARE IN METERS UNLESS OTHERWISE INDICATED.
2. DESIGN LIVE LOAD : HL–93
3. A MINIMUM ULTIMATE COMPRESSIVE STRENGTH FOR A 150x150x150 MM. CUBE AT 28 DAYS AS FOLLOWS:
   A) FOR PILE BENT/CAP BEAM 35 MPa. (357 KG/CM^2)
   B) FOR FOOTING 35 MPa. (357 KG/CM^2)
   C) FOR SIDEWALK AND BARRIER 35 MPa. (357 KG/CM^2)
4. REBAR SIZES SMALLER THAN 12 MM. SHALL BE TIS 20 GRADE SR 24 PLAIN ROUND BARS, OTHERS SHALL BE TIS 24 GRADE SD 40 DEFORMED BARS UNLESS UNLESS OTHERWISE INDICATED.
5. EACH SPREAD FOOTING SHALL BE LOCATED BELOW TO A DEPTH WHERE SCOUR WILL NOT AFFECT CAPACITY, THE MINIMUM ALLOWABLE BEARING CAPACITY OF 0.20 MPa. (20 TON/M^2)
6. HORIZONTAL CROSS BRACING BETWEEN COLUMNS OF PILE BENT SHALL BE PROVIDED AS FOLLOWS:
   A) IF THE DISTANCE FROM EXISTING GROUND LEVEL TO THE BOTTOM OF THE CAP BEAM EXCEED 3.00 M., A BRACING SHALL BE PLACED IN SUCH A WAY THAT THE DISTANCE FROM THE BOTTOM OF THE CAP BEAM TO THE CENTERLINE OF THE BRACING IS NOT MORE THAN 3.00 M.
   B) IF THE DISTANCE BETWEEN THE CENTERLINE OF THE BRACING TO THE EXISTING GROUND LEVEL EXCEED 3.00 M., ADDITIONAL BRACINGS SHALL BE PROVIDED AT AN INTERVAL NOT MORE THAN 3.00 M.
7. *ADJUST SPACING OF STEEL REINFORCEMENT IN TABLE BY @ 0.10 (TYP.) TO RESIST EARTHQUAKE FORCE. (IN CASE OF BRIDGE LOCATED IN SEISMIC LEVEL 1B AND 2)
8. R = 0.50 M. FOR THE BRIDGE WITHOUT SIDEWALK (P = 0.00). FOR THE BRIDGE WITH SIDEWALK OF P = 0.50 AND 1.00, R = 0.50 M. AND 1.00 M., RESPECTIVELY.

⑨ USING 0.45 WHEN PILE BENT AND BEAM ARE IN SALTWATER

⑩ LAP SPLICE OF MAIN REINFORCING BAR IS NOT PERMITTED FOR SEISMIC LEVEL 1B AND 2

KINGDOM OF THAILAND
MINISTRY OF TRANSPORT
DEPARTMENT OF HIGHWAYS

STANDARD DRAWING

9.00–15.00 M. ROADWAY WIDTH SLAB BRIDGE, 1°–45° SKEW SPREAD FOOTING PIER DETAIL

REV.	REVISION	SIGNATURE	DATE
REV.1	REVISION 1/2017		JUN 2017

DESIGNED : D.O.H. & CONSULTANTS **CHECKED :** BUREAU OF LOCATION & DESIGN **DATE :** OCT 2015

SUBMITTED : (DIRECTOR OF LOCATION & DESIGN BUREAU) **SCALE :** AS SHOWN

APPROVED : (FOR DIRECTOR GENERAL) **DWG NO.** PB–301

SHEET NO. 247/R1

TABLE OF ABUTMENT DIMENSIONS

ROADWAY WIDTH M.	LENGTH OF CAP BEAM A SEC θ M.	DOWEL SPACING B SEC θ M.	SPAN 5.00 M. COL SPG. C SEC θ M.	SPAN 5.00 M. NO.OF COLUMN	SPAN 6.00 M. COL SPG. C SEC θ M.	SPAN 6.00 M. NO.OF COLUMN	SPAN 7.00 M. COL SPG. C SEC θ M.	SPAN 7.00 M. NO.OF COLUMN	SPAN 8.00 M. COL SPG. C SEC θ M.	SPAN 8.00 M. NO.OF COLUMN	SPAN 9.00 M. COL SPG. C SEC θ M.	SPAN 9.00 M. NO.OF COLUMN	SPAN 10.00 M. COL SPG. C SEC θ M.	SPAN 10.00 M. NO.OF COLUMN	SPAN 12.00 M. COL SPG. C SEC θ M.	SPAN 12.00 M. NO.OF COLUMN
9.00	{9.00+2(0.50+P)}SEC θ	1.00 SEC θ	3.00 SEC θ	4	3.00 SEC θ	4	2.25 SEC θ	5	2.25 SEC θ	5	1.50 SEC θ	7	1.50 SEC θ	7	(1.25–1.30) SEC θ	8
10.00	{10.00+2(0.50+P)}SEC θ	1.00 SEC θ	2.50 SEC θ	5	2.50 SEC θ	5	2.00 SEC θ	6	2.00 SEC θ	6	(1.42–1.45) SEC θ	8	(1.42–1.45) SEC θ	8	1.25 SEC θ	9
11.00	{11.00+2(0.50+P)}SEC θ	1.00 SEC θ	2.75 SEC θ	5	2.75 SEC θ	5	(1.80–1.85) SEC θ	7	(1.80–1.85) SEC θ	7	(1.56–1.60) SEC θ		(1.56–1.60) SEC θ	8	1.375 SEC θ	9
12.00	{12.00+2(0.50+P)}SEC θ	1.00 SEC θ	2.40 SEC θ	6	2.40 SEC θ	6	2.00 SEC θ	7	2.00 SEC θ	7	1.50 SEC θ	9	1.50 SEC θ	9	(1.31–1.34) SEC θ	10
13.00	{13.00+2(0.50+P)}SEC θ	1.00 SEC θ	2.60 SEC θ	6	2.60 SEC θ	6	(1.85–1.86) SEC θ	8	(1.85–1.86) SEC θ	8	(1.44–1.46) SEC θ	10	(1.44–1.46) SEC θ	10	1.30 SEC θ	11
14.00	{14.00+2(0.50+P)}SEC θ	1.00 SEC θ	(2.30–2.40) SEC θ	7	(2.30–2.40) SEC θ	7	2.00 SEC θ	8	2.00 SEC θ	8	1.40 SEC θ	11	1.40 SEC θ	11	(1.24–1.28) SEC θ	12
15.00	{15.00+2(0.50+P)}SEC θ	1.00 SEC θ	2.50 SEC θ	7	2.50 SEC θ	7	1.875 SEC θ	9	1.875 SEC θ	9	1.50 SEC θ	11	1.50 SEC θ	11	1.25 SEC θ	13

TABLE OF FOOTING DIMENSIONS

ROADWAY WIDTH M.	LENGTH OF FOOTING D SEC θ , M.	WIDTH OF FOOTING, E			
		SPAN 5.00–6.00 M.	SPAN 7.00–8.00 M.	SPAN 9.00–10.00 M.	SPAN 12.00 M.
9.00	11.80 SEC θ	2.50	2.75	3.00	3.50
10.00	12.80 SEC θ	2.50	2.75	3.00	3.50
11.00	13.80 SEC θ	2.50	2.75	3.00	3.50
12.00	14.80 SEC θ	2.50	2.75	3.00	3.50
13.00	15.80 SEC θ	2.50	2.75	3.00	3.50
14.00	16.80 SEC θ	2.50	2.75	3.00	3.50
15.00	17.80 SEC θ	2.50	2.75	3.00	3.50

TABLE OF CAPBEAM WIDTH (W_{CAB})

CAP–BEAM WIDTH (W_{CAB})	CENTER TO CENTER SPAN (M.)						
	5.00	6.00	7.00	8.00	9.00	10.00	12.00
0° ≤ SKEW ≤ 25°	0.50	0.50	0.50	0.50	0.50	0.50	0.50
25° < SKEW ≤ 45°	0.55	0.55	0.55	0.60	0.60	0.60	0.60

TABLE OF REINFORCEMENT

BAR BENDING DIAGRAMS

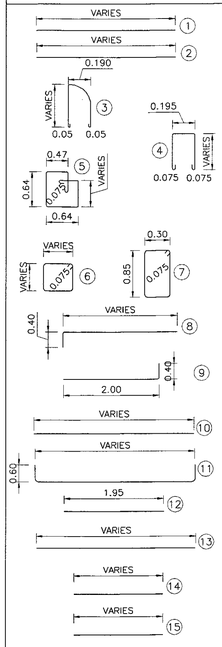

No.	BAR MARK	SPAN 5.00 M. REINF.	SPAN 6.00 M. REINF.	SPAN 7.00 M. REINF.	SPAN 8.00 M. REINF.	SPAN 9.00 M. REINF.	SPAN 10.00 MM. REINF.	SPAN 12.00 M. REINF.
①	C 201	8–DB25	8–DB25	8–DB25	8–DB25	8–DB25	8–DB25	8–DB25
②	C 202	2–DB12	2–DB12	2–DB12	2–DB12	2–DB12	2–DB12	2–DB12
③	ST 201	RB9 @ 0.20	RB9 @ 0.20	RB9 @ 0.20	RB9 @ 0.20	RB9 @ 0.20	RB9 @ 0.20	RB9 @ 0.20
④	ST 202	RB9 @ 0.20	RB9 @ 0.20	RB9 @ 0.20	RB9 @ 0.20	RB9 @ 0.20	RB9 @ 0.20	RB9 @ 0.20
⑤	ST 203	RB9 @ 0.20	RB9 @ 0.20	RB9 @ 0.20	RB9 @ 0.20	RB9 @ 0.20	RB9 @ 0.20	RB9 @ 0.20
⑥	ST 204	RB9 @ 0.20	RB9 @ 0.20	RB9 @ 0.20	RB9 @ 0.20	RB9 @ 0.20	RB9 @ 0.20	RB9 @ 0.20
⑦	ST 205	RB9 @ 0.20	RB9 @ 0.20	RB9 @ 0.20	RB9 @ 0.20	RB9 @ 0.20	RB9 @ 0.20	RB9 @ 0.20
⑧+	CN 201 (LEVEL 1)	4–DB25	4–DB25	4–DB25	4–DB25	4–DB25	4–DB25	4–DB25
	CN 201 (LEVEL 2)	8–DB25	8–DB25	8–DB25	8–DB25	8–DB25	8–DB25	8–DB25
⑨+	CN 202	4–DB25	4–DB25	4–DB25	4–DB25	4–DB25	4–DB25	4–DB25
⑩	F 201	2–DB25	2–DB25	2–DB25	2–DB25	2–DB25	2–DB25	2–DB25
⑪	F 202	2–DB25	2–DB25	2–DB25	2–DB25	2–DB25	2–DB25	2–DB25
⑫	F 203	DB25 @ 0.25	DB25 @ 0.25	DB25 @ 0.25	DB25 @ 0.25	DB25 @ 0.25	DB25 @ 0.25	DB25 @ 0.25
⑬	F 204	6–DB25	6–DB25	6–DB25	6–DB25	6–DB25	6–DB25	6–DB25
⑭	W 205	4–DB12	4–DB12	4–DB12	4–DB12	4–DB12	4–DB12	4–DB12
⑮	W 206	3–DB12	3–DB12	3–DB12	3–DB12	3–DB12	3–DB12	3–DB12

REMARK : IF THE DISTANCE BETWEEN THE CENTERLINE OF THE BRACING TO THE EXISTING GROUND LEVEL OF ABUTMENT EXCEED 4.00 M., OTHER TYPE OF ABUTMENT AS DWG. NO. PB–310 SHALL BE USED, ⑧+ ⑨+ REINFORCEMENT NUMBERS OF CN 201 AND CN 202 ARE SHOWN PER COLUMN RELEVANT TO SEISMIC LEVEL 1 (1A OR 1B) AND 2.

TABLE OF SEC θ OR SEC (45°±θ/2)

θ OR 45°±θ/2	0	5	10	15	20	25	30	35	40	45	50	55	60
SEC θ OR SEC45°±θ/2	1.0000	1.0038	1.0154	1.0353	1.0642	1.1034	1.1547	1.2208	1.3054	1.4142	1.5557	1.7434	2.0000

LENGTH OF WINGWALL

L1 =1.414 SEC (45°–θ/2) L3 =1.414 SEC (45°+θ/2)

L2 =0.50 SEC (45°–θ/2) L4 =0.50 SEC (45°+θ/2)

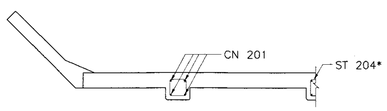

SECTION B – B
SCALE 1 : 75

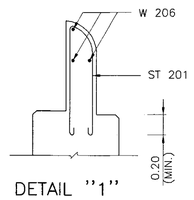

DETAIL "1"
SCALE 1 : 25

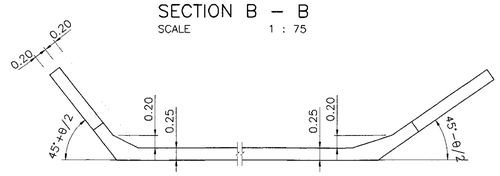

WINGWALL DETAILS
SCALE 1 : 75

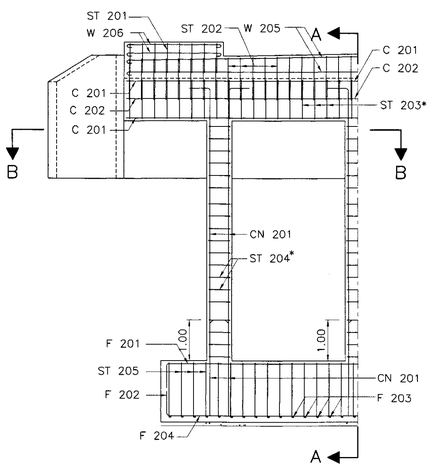

ABUTMENT REINFORCEMENT DETAILS
SCALE 1 : 75

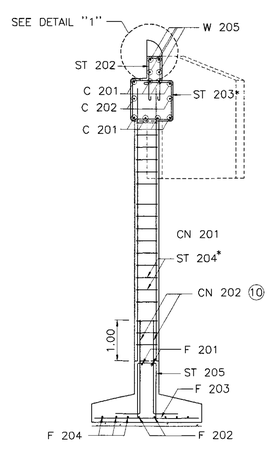

SECTION A – A
SCALE 1 : 75

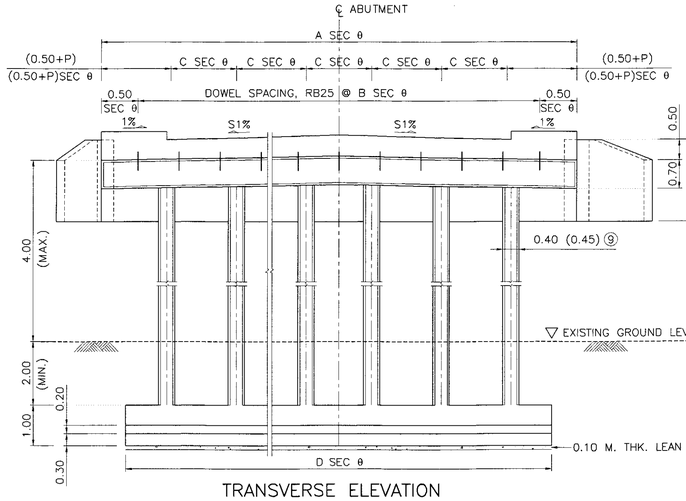

TRANSVERSE ELEVATION
SCALE 1 : 75

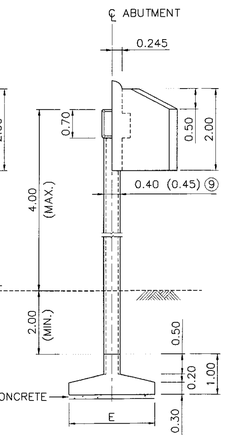

LONGITUDINAL ELEVATION
SCALE 1 : 75

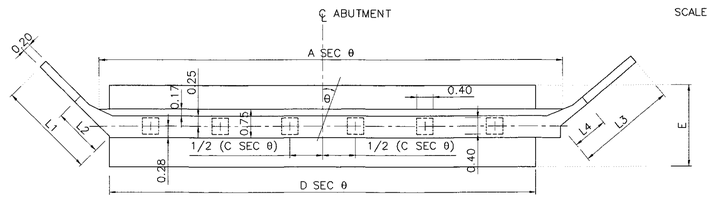

PLAN
ABUTMENT DETAILS
SCALE 1 : 75

NOTES :

1. ALL DIMENSIONS SHOWN ARE IN METERS UNLESS OTHERWISE INDICATED.
2. DESIGN LIVE LOAD : HL–93
3. A MINIMUM ULTIMATE COMPRESSIVE STRENGTH FOR A 150x150x150 MM. CUBE AT 28 DAYS AS FOLLOWS:
   A) FOR ABUTMENT/WINGWALL 35 MPa. (357 KG/CM^2)
   B) FOR FOOTING 35 MPa. (357 KG/CM^2)
   C) FOR SIDEWALK AND BARRIER 35 MPa. (357 KG/CM^2)
4. REBAR SIZES SMALLER THAN 12 MM. SHALL BE TIS 20 GRADE SR 24 PLAIN ROUND BARS, OTHERS SHALL BE TIS 24 GRADE SD 40 DEFORMED BARS UNLESS UNLESS OTHERWISE INDICATED.
5. EACH SPREAD SHALL BE LOCATED BELOW TO A DEPTH WHERE SCOUR WILL NOT AFFECT CAPACITY, THE MINIMUM ALLOWABLE BEARING CAPACITY OF 0.20 MPa (0.20 TON/M^2)
6. *ADJUST SPACING OF STEEL REINFORCEMENT IN TABLE BY @ 0.10 (TYP.) TO RESIST EARTHQUAKE FORCE. (IN CASE OF BRIDGE LOCATED IN LEVEL 1B AND 2)
7. IF THE DISTANCE BETWEEN THE CENTERLINE OF THE BRACING TO THE EXISTING GROUND LEVEL OF ABUTMENT EXCEED 4.00 M., OTHER TYPE OF ABUTMENT AS DWG. NO. PB–301 SHALL BE USED.
8. R = 0.50 M. FOR THE BRIDGE WITHOUT SIDEWALK (P = 0.00). FOR THE BRIDGE WITH SIDEWALK OF P = 0.50 AND 1.00, R = 0.50 M. AND 1.00 M., RESPECTIVELY.

⑨ USING 0.45 WHEN PILE BENT AND BEAM ARE IN SALTWATER

⑩ LAP SPLICE OF MAIN REINFORCING BAR IS NOT PERMITTED FOR SEISMIC LEVEL 1B AND 2

REV.	REVISION	SIGNATURE	DATE
REV.1	REVISION 1/2017		JUN 2017

KINGDOM OF THAILAND

MINISTRY OF TRANSPORT

DEPARTMENT OF HIGHWAYS

STANDARD DRAWING

9.00–15.00 M. ROADWAY WIDTH SLAB BRIDGE, 1°–45° SKEW

SPREAD FOOTING ABUTMENT DETAIL

DESIGNED : D.O.H. & CONSULTANTS	**CHECKED :** BUREAU OF LOCATION & DESIGN	**DATE :** OCT 2015
SUBMITTED : (DIRECTOR OF LOCATION & DESIGN BUREAU)		**SCALE :** AS SHOWN
APPROVED : (FOR DIRECTOR GENERAL)		**DWG NO.** PB–302
		SHEET NO. 248/R1

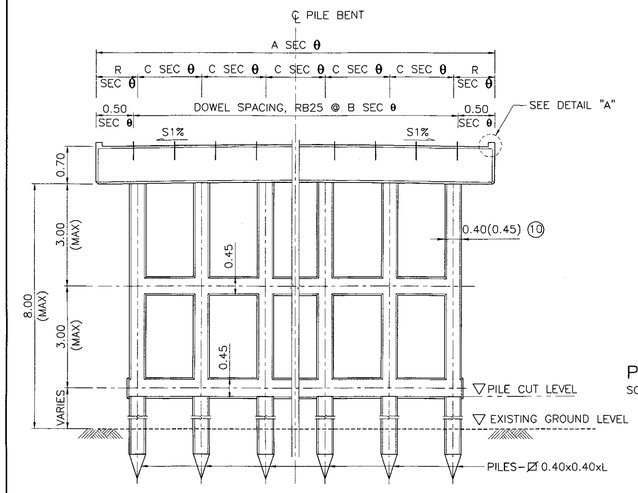

ELEVATION
SCALE 1 : 75

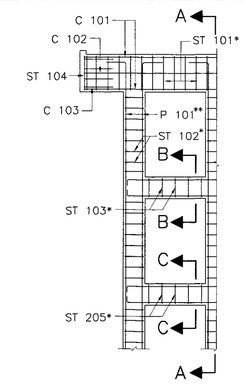

PILE BENT REINFORCEMENT DETAIL
SCALE 1 : 75

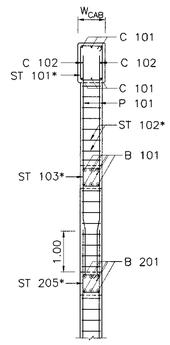

SECTION A – A
SCALE 1 : 75

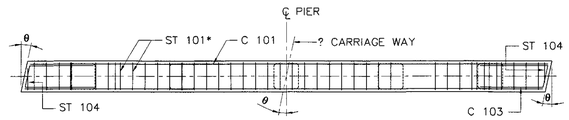

ABUTMENT REINFORCEMENT
SCALE 1 : 75

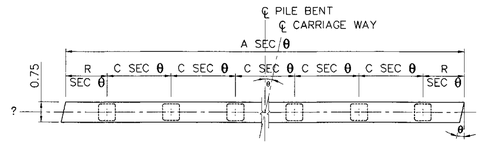

PLAN PILE BENT DETAILS
SCALE 1 : 75

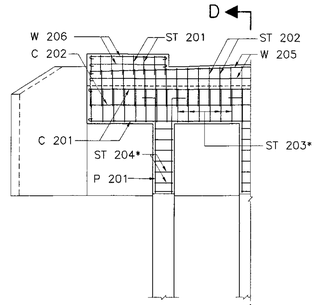

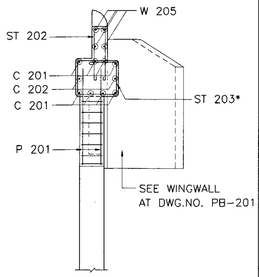

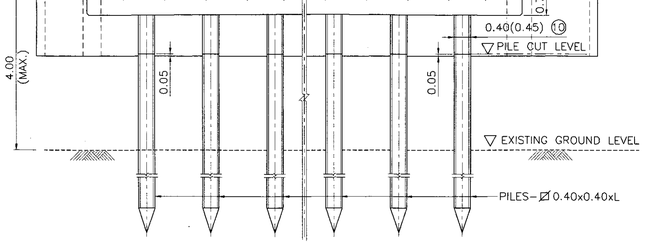

ELEVATION
SCALE 1 : 75

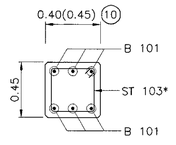

SECTION B – B
SCALE 1 : 25

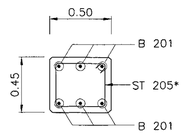

SECTION C – C
SCALE 1 : 25

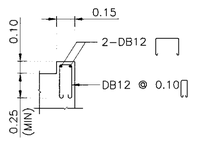

DETAIL "A"
SCALE 1 : 25

ABUTMENT REINFORCEMENT
SCALE 1 : 75

SECTION D – D
SCALE 1 : 75

NOTES :

1. ALL DIMENSIONS SHOWN ARE IN METERS UNLESS OTHERWISE INDICATED.
2. DESIGN LIVE LOAD : HL-93
3. A MINIMUM ULTIMATE COMPRESSIVE STRENGTH FOR A 150x150x150 MM. CUBE AT 28 DAYS AS FOLLOWS:
   A) FOR PILE BENT/CAP BEAM 35 MPa. (306 KG/CM^2)
   B) FOR FOOTING/R.C. DRIVEN PILE 35 MPa. (357 KG/CM^2)
   C) FOR PRECAST DRIVEN PILE 45 MPa. (459 KG/CM^2)
   D) FOR SIDEWALK AND BARRIER 35 MPa. (357 KG/CM^2)
4. REBAR SIZES SMALLER THAN 12 MM. SHALL BE TIS 20 GRADE SR 24 PLAIN ROUND BARS, OTHERS SHALL BE TIS 24 GRADE SD 40 DEFORMED BARS UNLESS UNLESS OTHERWISE INDICATED.
5. EACH PILE SHALL BE DRIVEN TO A DEPTH WHERE SCOUR WILL NOT AFFECT CAPACITY, THE MINIMUM ALLOWABLE CAPACITY OF 0.50 MN (50 TON) FOR EACH PILE AND A MINIMUM 3.50 M. EMBEDED LENGTH UNDER A DEPTH ARE REQUIRED
6. HORIZONTAL CROSS BRACING BETWEEN COLUMNS OF PILE BENT SHALL BE PROVIDED AS FOLLOWS:
   A) IF THE DISTANCE FROM EXISTING GROUND LEVEL TO THE BOTTOM OF THE CAP BEAM EXCEED 3.00 M., A BRACING SHALL BE PLACED IN SUCH A WAY THAT THE DISTANCE FROM THE BOTTOM OF THE CAP BEAM TO THE CENTERLINE OF THE BRACING IS NOT MORE THAN 3.00 M.
   B) IF THE DISTANCE BETWEEN THE CENTERLINE OF THE BRACING TO THE EXISTING GROUND LEVEL EXCEED 3.00 M., ADDITIONAL BRACINGS SHALL BE PROVIDED AT AN INTERVAL NOT MORE THAN 3.00 M.
7. *ADJUST SPACING OF STEEL REINFORCEMENT IN TABLE BY @ 0.10 (TYP.) TO RESIST EARTHQUAKE FORCE. (IN CASE OF BRIDGE LOCATED IN SEISMIC LEVEL 1B AND 2)
8. IF THE DISTANCE BETWEEN THE CENTERLINE OF THE BRACING TO THE EXISTING GROUND LEVEL OF ABUTMENT EXCEED 4.00 M., OTHER TYPE OF ABUTMENT AS DWG. NO. PB-301 SHALL BE USED.
9. R = 0.50 M. FOR THE BRIDGE WITHOUT SIDEWALK (P = 0.00). FOR THE BRIDGE WITH SIDEWALK OF P = 0.50 AND 1.00, R = 0.50 M. AND 1.00 M., RESPECTIVELY.

(10) USING 0.45 WHEN PILE BENT AND BEAM ARE IN SALTWATER

TABLE OF REINFORCEMENT

BAR BENDING DIAGRAMS	No.	BAR MARK	SPAN 5.00 M. REINF.	SPAN 6.00 M. REINF.	SPAN 7.00 M. REINF.	SPAN 8.00 M. REINF.	SPAN 9.00 M. REINF.	SPAN 10.00 M. REINF.	SPAN 12.00 M. REINF.
	(1)	C 101	6-DB25	6-DB25	6-DB25	6-DB25	6-DB25	8-DB25	8-DB25
	(2)	C 102	2-DB12	2-DB12	2-DB12	2-DB12	2-DB12	2-DB12	2-DB12
	(3)	C 103	4-DB12	4-DB12	4-DB12	4-DB12	4-DB12	4-DB12	4-DB12
	(4)	ST 101	RB9 @ 0.20	RB9 @ 0.20	RB9 @ 0.20	RB9 @ 0.20	RB9 @ 0.20	RB9 @ 0.20	RB9 @ 0.20
	(5)	ST 102	RB9 @ 0.20	RB9 @ 0.20	RB9 @ 0.20	RB9 @ 0.20	RB9 @ 0.20	RB9 @ 0.20	RB9 @ 0.20
	(6)	ST 103	DB12 @ 0.20	DB12 @ 0.20	DB12 @ 0.20	DB12 @ 0.20	DB12 @ 0.20	DB12 @ 0.20	DB12 @ 0.20
	(7)	ST 104	2-RB9	2-RB9	2-RB9	2-RB9	2-RB9	2-RB9	2-RB9
	(8)	B 101	6-DB25	6-DB25	6-DB25	6-DB25	6-DB25	6-DB25	6-DB25
	(9)+	P 101 (LEVEL 1)	4-DB25	4-DB25	4-DB25	4-DB25	4-DB25	4-DB25	4-DB25
		P 101 (LEVEL 2)	8-DB25	8-DB25	8-DB25	8-DB25	8-DB25	8-DB25	8-DB25
	(10)	C 201	8-DB25	8-DB25	8-DB25	8-DB25	8-DB25	8-DB25	8-DB25
	(11)	C 202	2-DB12	2-DB12	2-DB12	2-DB12	2-DB12	2-DB12	2-DB12
	(12)	ST 201	RB9 @ 0.20	RB9 @ 0.20	RB9 @ 0.20	RB9 @ 0.20	RB9 @ 0.20	RB9 @ 0.20	RB9 @ 0.20
	(13)	ST 202	RB9 @ 0.20	RB9 @ 0.20	RB9 @ 0.20	RB9 @ 0.20	RB9 @ 0.20	RB9 @ 0.20	RB9 @ 0.20
	(14)	ST 203	RB9 @ 0.20	RB9 @ 0.20	RB9 @ 0.20	RB9 @ 0.20	RB9 @ 0.20	RB9 @ 0.20	RB9 @ 0.20
	(15)	ST 204	RB9 @ 0.20	RB9 @ 0.20	RB9 @ 0.20	RB9 @ 0.20	RB9 @ 0.20	RB9 @ 0.20	RB9 @ 0.20
	(16)	ST 205	DB12 @ 0.10	DB12 @ 0.10	DB12 @ 0.10	DB12 @ 0.10	DB12 @ 0.10	DB12 @ 0.10	DB12 @ 0.10
	(17)	B 201	6-DB25	6-DB25	6-DB25	6-DB25	6-DB25	6-DB25	6-DB25
	(18)+	P 201 (LEVEL 1)	4-DB25	4-DB25	4-DB25	4-DB25	4-DB25	4-DB25	4-DB25
		P 201 (LEVEL 2)	8-DB25	8-DB25	8-DB25	8-DB25	8-DB25	8-DB25	8-DB25
	(19)	W 205	4-DB12	4-DB12	4-DB12	4-DB12	4-DB12	4-DB12	4-DB12
	(20)	W 206	3-DB12	3-DB12	3-DB12	3-DB12	3-DB12	3-DB12	3-DB12

REMARK : (9)+, (18)+ = REINFORCEMENT NUMBERS OF P 101 AND P 201 ARE SHOWN PER COLUMN RELEVANT TO SEISMIC LEVEL 1 (1A OR 1B) AND 2

TABLE OF PIER DIMENSIONS

ROADWAY WIDTH M.	LENGTH OF PILE BENT HEAD A SEC θ M.	LENGTH OF ABUTMENT HEAD A SEC θ M.	DOWEL SPACING B SEC θ M.	SPAN 5.00 M. COL SPG. C SEC θ M.	SPAN 5.00 M. NO.OF COLUMN	SPAN 6.00 M. COL SPG. C SEC θ M.	SPAN 6.00 M. NO.OF COLUMN	SPAN 7.00 M. COL SPG. C SEC θ M.	SPAN 7.00 M. NO.OF COLUMN	SPAN 8.00 M. COL SPG. C SEC θ M.	SPAN 8.00 M. NO.OF COLUMN	SPAN 9.00 MM. COL SPG. C SEC θ M.	SPAN 9.00 MM. NO.OF COLUMN	SPAN 10.00 M. COL SPG. C SEC θ M.	SPAN 10.00 M. NO.OF COLUMN	SPAN 12.00 M. COL SPG. C SEC θ M.	SPAN 12.00 M. NO.OF COLUMN
9.00	(9.00+2R) SEC θ	{9.00+2(0.50+P)} SEC θ	1.00 SEC θ	3.00 SEC θ	4	3.00 SEC θ	4	2.25 SEC θ	5	2.25 SEC θ	5	1.50 SEC θ	7	1.50 SEC θ	7	(1.25-1.30) SEC θ	8
10.00	(10.00+2R) SEC θ	{10.00+2(0.50+P)} SEC θ	1.00 SEC θ	2.50 SEC θ	5	2.50 SEC θ	5	2.00 SEC θ	6	2.00 SEC θ	6	(1.42-1.45) SEC θ	8	(1.42-1.45) SEC θ	8	1.25 SEC θ	9
11.00	(11.00+2R) SEC θ	{11.00+2(0.50+P)} SEC θ	1.00 SEC θ	2.75 SEC θ	5	2.75 SEC θ	5	(1.80-1.85) SEC θ	7	(1.80-1.85) SEC θ	7	(1.56-1.60) SEC θ		(1.56-1.60) SEC θ	8	1.375 SEC θ	9
12.00	(12.00+2R) SEC θ	{12.00+2(0.50+P)} SEC θ	1.00 SEC θ	2.40 SEC θ	6	2.40 SEC θ	6	2.00 SEC θ	7	2.00 SEC θ	7	1.50 SEC θ	9	1.50 SEC θ	9	(1.31-1.34) SEC θ	10
13.00	(13.00+2R) SEC θ	{13.00+2(0.50+P)} SEC θ	1.00 SEC θ	2.60 SEC θ	6	2.60 SEC θ	6	(1.85-1.86) SEC θ	8	(1.85-1.86) SEC θ	8	(1.44-1.46) SEC θ	10	(1.44-1.46) SEC θ	10	1.30 SEC θ	11
14.00	(14.00+2R) SEC θ	{14.00+2(0.50+P)} SEC θ	1.00 SEC θ	(2.30-2.40) SEC θ	7	(2.30-2.40) SEC θ	7	2.00 SEC θ	8	2.00 SEC θ	8	1.40 SEC θ	11	1.40 SEC θ	11	(1.24-1.28) SEC θ	12
15.00	(15.00+2R) SEC θ	{15.00+2(0.50+P)} SEC θ	1.00 SEC θ	2.50 SEC θ	7	2.50 SEC θ	7	1.875 SEC θ	9	1.875 SEC θ	9	1.50 SEC θ	11	1.50 SEC θ	11	1.25 SEC θ	13

TABLE OF SEC θ OR SEC (45°±θ/2)

θ OR 45°±θ/2	0	5	10	15	20	25	30	35	40	45	50	55	60
SEC θ OR SEC45°±θ/2	1.0000	1.0038	1.0154	1.0353	1.0642	1.1034	1.1547	1.2208	1.3054	1.4142	1.5557	1.7434	2.0000

TABLE OF CAPBEAM WIDTH (W_{CAB})

CAP-BEAM WIDTH (W_{CAB})	CENTER TO CENTER SPAN (M.)						
	5.00	6.00	7.00	8.00	9.00	10.00	12.00
0° ≤ SKEW ≤ 25°	0.50	0.50	0.50	0.50	0.50	0.50	0.50
25° < SKEW ≤ 45°	0.55	0.55	0.55	0.60	0.60	0.60	0.60

REV.	REVISION	SIGNATURE	DATE
REV.1	REVISION 1/2017		JUN 2017

KINGDOM OF THAILAND

MINISTRY OF TRANSPORT
DEPARTMENT OF HIGHWAYS

STANDARD DRAWING

9.00-15.00 M. ROADWAY WIDTH SLAB BRIDGE, 1°-45° SKEW

PILE BENT AND ABUTMENT DETAILS

DESIGNED : D.O.H. & CONSULTANTS	**CHECKED :** BUREAU OF LOCATION & DESIGN	**DATE :** OCT 2015
SUBMITTED : (DIRECTOR OF LOCATION & DESIGN BUREAU)		**SCALE :** AS SHOWN
APPROVED : (FOR DIRECTOR GENERAL)		**DWG NO.** PB-303
		SHEET NO. 249/R1

TABLE OF PIER DIMENSIONS

ROADWAY WIDTH M.	LENGTH OF CAP BEAM A SEC θ M.	DOWEL SPACING B SEC θ M.	SPAN 5.00 M. COL SPG. C SEC θ M.	SPAN 5.00 M. NO.OF COLUMN	SPAN 6.00 M. COL SPG. C SEC θ M.	SPAN 6.00 M. NO.OF COLUMN	SPAN 7.00 M. COL SPG. C SEC θ M.	SPAN 7.00 M. NO.OF COLUMN	SPAN 8.00 M. COL SPG. C SEC θ M.	SPAN 8.00 M. NO.OF COLUMN	SPAN 9.00 M. COL SPG. C SEC θ M.	SPAN 9.00 M. NO.OF COLUMN	SPAN 10.00 M. COL SPG. C SEC θ M.	SPAN 10.00 M. NO.OF COLUMN	SPAN 12.00 M. COL SPG. C SEC θ M.	SPAN 12.00 M. NO.OF COLUMN
9.00	(9.00 + 2R) SEC θ	1.00 SEC θ	3.00 SEC θ	4	3.00 SEC θ	4	2.25 SEC θ	5	2.25 SEC θ	5	1.50 SEC θ	7	1.50 SEC θ	7	(1.25–1.30) SEC θ	8
10.00	(10.00 + 2R) SEC θ	1.00 SEC θ	2.50 SEC θ	5	2.50 SEC θ	5	2.00 SEC θ	6	2.00 SEC θ	6	(1.42–1.45) SEC θ	8	(1.42–1.45) SEC θ	8	1.25 SEC θ	9
11.00	(11.00 + 2R) SECθ	1.00 SEC θ	2.75 SEC θ	5	2.75 SEC θ	5	(1.80–1.85) SEC θ	7	(1.80–1.85) SEC θ	7	(1.56–1.60) SEC θ	8	(1.56–1.60) SEC θ	8	1.375 SEC θ	9
12.00	(12.00 + 2R) SEC θ	1.00 SEC θ	2.40 SEC θ	6	2.40 SEC θ	6	2.00 SEC θ	7	2.00 SEC θ	7	1.50 SEC θ	9	1.50 SEC θ	9	(1.31–1.34) SEC θ	10
13.00	(13.00 + 2R) SEC θ	1.00 SEC θ	2.60 SEC θ	6	2.60 SEC θ	6	(1.85–1.86) SEC θ	8	(1.85–1.86) SEC θ	8	(1.44–1.46) SEC θ	10	(1.44–1.46) SEC θ	10	1.30 SEC θ	11
14.00	(14.00 + 2R) SEC θ	1.00 SEC θ	(2.30–2.40) SEC θ	7	(2.30–2.40) SEC θ	7	2.00 SEC θ	8	2.00 SEC θ	8	1.40 SEC θ	11	1.40 SEC θ	11	(1.24–1.28) SEC θ	12
15.00	(15.00 + 2R) SEC θ	1.00 SEC θ	2.50 SEC θ	7	2.50 SEC θ	7	1.875 SEC θ	9	1.875 SEC θ	9	1.50 SEC θ	11	1.50 SEC θ	11	1.25 SEC θ	13

REMARK : R = 0.50 AND 1.00 M. FOR THE BRIDGE WITHOUT SIDEWALK AND WITH SIDEWALK, RESPECTIVELY.

TABLE OF FOOTING DIMENSIONS

ROADWAY WIDTH M.	LENGTH OF FOOTING D SEC θ , M.	WIDTH OF FOOTING, E SPAN 5.00–6.00 M.	SPAN 7.00–8.00 M.	SPAN 9.00–10.00 M.	SPAN 12.00 M.
9.00	11.80 SEC θ	2.50	2.75	3.00	3.50
10.00	12.80 SEC θ	2.50	2.75	3.00	3.50
11.00	13.80 SEC θ	2.50	2.75	3.00	3.50
12.00	14.80 SEC θ	2.50	2.75	3.00	3.50
13.00	15.80 SEC θ	2.50	2.75	3.00	3.50
14.00	16.80 SEC θ	2.50	2.75	3.00	3.50
15.00	17.80 SEC θ	2.50	2.75	3.00	3.50

TABLE OF CAPBEAM WIDTH (W_{CAB})

CAP–BEAM WIDTH (W_{CAB})	CENTER TO CENTER SPAN (M.) 5.00	6.00	7.00	8.00	9.00	10.00	12.00
0° ≤ SKEW ≤ 25°	0.50	0.50	0.50	0.50	0.50	0.50	0.50
25° < SKEW ≤ 45°	0.55	0.55	0.55	0.60	0.60	0.60	0.60

TABLE OF REINFORCEMENT

BAR BENDING DIAGRAMS

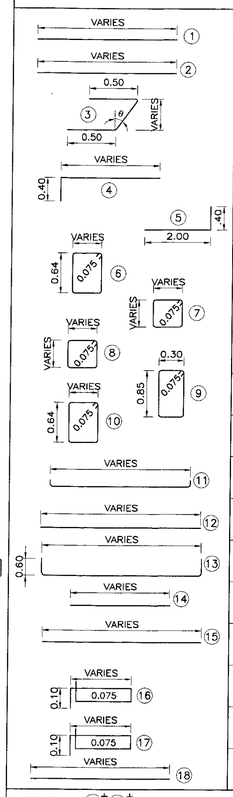

No.	BAR MARK	SPAN 5.00 M. REINF.	SPAN 6.00 M. REINF.	SPAN 7.00 M. REINF.	SPAN 8.00 M. REINF.	SPAN 9.00 M. REINF.	SPAN 10.00 M. REINF.	SPAN 12.00 M. REINF.
①	C 101	6–DB25	6–DB25	6–DB25	6–DB25	6–DB25	8–DB25	8–DB25
②	C 102	2–DB12	2–DB12	2–DB12	2–DB12	2–DB12	2–DB12	2–DB12
③	C 103	4–DB12	4–DB12	4–DB12	4–DB12	4–DB12	4–DB12	4–DB12
④+	CN 101 (LEVEL 1)	4–DB25	4–DB25	4–DB25	4–DB25	4–DB25	4–DB25	4–DB25
	CN 101 (LEVEL 2)	8–DB25	8–DB25	8–DB25	8–DB25	8–DB25	8–DB25	8–DB25
⑤+	CN 102	4–DB25	4–DB25	4–DB25	4–DB25	4–DB25	4–DB25	4–DB25
⑥	ST 101	RB9 @ 0.20	RB9 @ 0.20	RB9 @ 0.20	RB9 @ 0.20	RB9 @ 0.20	RB9 @ 0.20	RB9 @ 0.20
⑦	ST 102	RB9 @ 0.20	RB9 @ 0.20	RB9 @ 0.20	RB9 @ 0.20	RB9 @ 0.20	RB9 @ 0.20	RB9 @ 0.20
⑧	ST 103	DB12 @ 0.20	DB12 @ 0.20	DB12 @ 0.20	DB12 @ 0.20	DB12 @ 0.20	DB12 @ 0.20	DB12 @ 0.20
⑨	ST 104	RB9 @ 0.20	RB9 @ 0.20	RB9 @ 0.20	RB9 @ 0.20	RB9 @ 0.20	RB9 @ 0.20	RB9 @ 0.20
⑩	ST 105	2–RB9	2–RB9	2–RB9	2–RB9	2–RB9	2–RB9	2–RB9
⑪	B 101	6–DB25	6–DB25	6–DB25	6–DB25	6–DB25	6–DB25	6–DB25
⑫	F 101	DB12 @ 0.20	DB12 @ 0.20	DB12 @ 0.20	DB12 @ 0.20	DB12 @ 0.20	DB12 @ 0.20	DB12 @ 0.20
⑬	F 102	DB20 @ 0.20	DB20 @ 0.20	DB20 @ 0.20	DB20 @ 0.20	DB20 @ 0.20	DB20 @ 0.20	DB20 @ 0.20
⑭	F 103	DB12 @ 0.20	DB12 @ 0.20	DB12 @ 0.20	DB12 @ 0.20	DB12 @ 0.20	DB12 @ 0.20	DB12 @ 0.20
⑮	F 104	DB25 @ 0.20	DB25 @ 0.20	DB25 @ 0.20	DB25 @ 0.20	DB25 @ 0.20	DB25 @ 0.20	DB25 @ 0.20
⑯	VW 1	DB12 @ 0.25	DB12 @ 0.25	DB12 @ 0.25	DB12 @ 0.25	DB12 @ 0.25	DB12 @ 0.25	DB12 @ 0.25
⑰	VW 2	6–DB12	6–DB12	6–DB12	6–DB12	6–DB12	6–DB12	6–DB12
⑱	HW	DB12 @ 0.25	DB12 @ 0.25	DB12 @ 0.25	DB12 @ 0.25	DB12 @ 0.25	DB12 @ 0.25	DB12 @ 0.25

REMARK : ④+⑤+ = REINFORCEMENT NUMBERS OF CN 101 AND CN 102 ARE SHOWN PER COLUMN RELEVANT TO SEISMIC LEVEL 1 (1A OR 1B) AND 2

TABLE OF SEC θ

θ , DEGREE	0	5	10	15	20	25	30	35	40	45
SEC θ	1.0000	1.0038	1.0154	1.0353	1.0642	1.1034	1.1547	1.2208	1.3054	1.4142

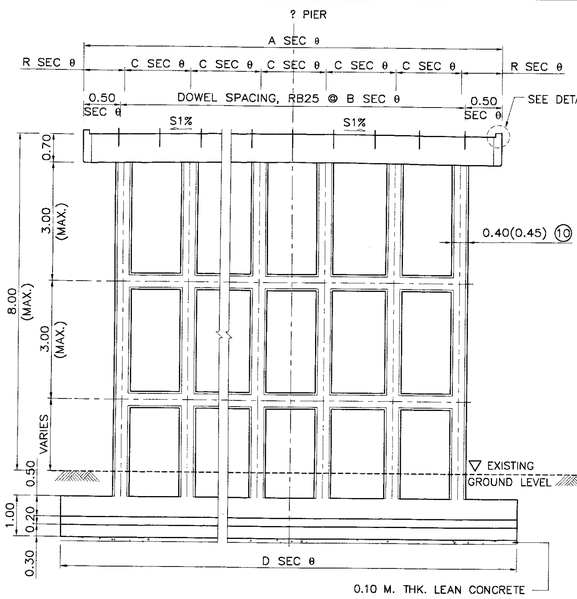

TRANSVERSE ELEVATION
SCALE 1 : 75

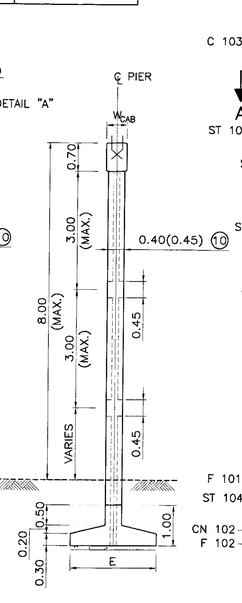

SIDE ELEVATION
SCALE 1 : 75

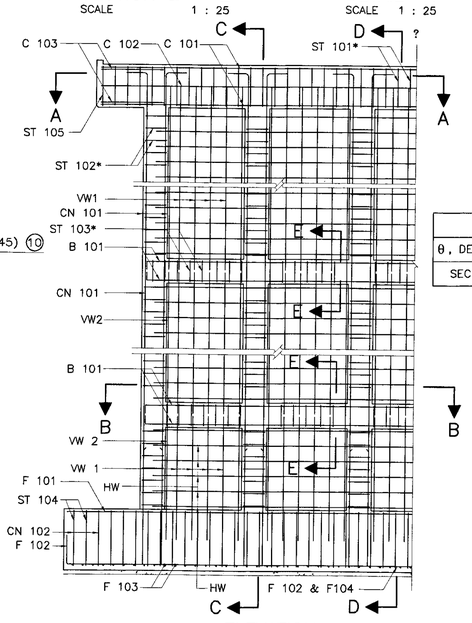

ELEVATION
SCALE 1 : 75

SECTION C – C
SCALE 1 : 50

SECTION D – D
SCALE 1 : 50

PLAN

PIER DETAILS
SCALE 1 : 75

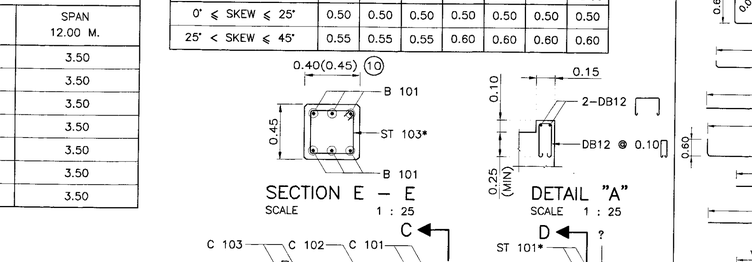

SECTION A – A

SECTION B – B

PIER REINFORCEMENT DETAILS
SCALE 1 : 50

DETAIL "A"
SCALE 1 : 25

NOTES :

1. ALL DIMENSIONS SHOWN ARE IN METERS UNLESS OTHERWISE INDICATED.
2. DESIGN LIVE LOAD : HL–93
3. A MINIMUM ULTIMATE COMPRESSIVE STRENGTH FOR A 150x150x150 MM. CUBE AT 28 DAYS AS FOLLOWS:
   A) FOR PILE BENT/CAP BEAM 35 MPa. (357 KG/CM^2)
   B) FOR FOOTING/R.C. DRIVEN PILE 35 MPa. (357 KG/CM^2)
   C) FOR SIDEWALK AND BARRIER 35 MPa. (357 KG/CM^2)
4. REBAR SIZES SMALLER THAN 12 MM. SHALL BE TIS 20 GRADE SR 24 PLAIN ROUND BARS, OTHERS SHALL BE TIS 24 GRADE SD 40 DEFORMED BARS UNLESS UNLESS OTHERWISE INDICATED.
5. EACH SPREAD FOOTING SHALL BE LOCATED BELOW TO A DEPTH WHERE SCOUR WILL NOT AFFECT CAPACITY, THE MINIMUM ALLOWABLE BEARING CAPACITY OF 0.20 MPa (20 TON/M^2)
6. HORIZONTAL CROSS BRACING BETWEEN COLUMNS OF PILE BENT SHALL BE PROVIDED AS FOLLOWS:
   A) IF THE DISTANCE FROM EXISTING GROUND LEVEL TO THE BOTTOM OF THE CAP BEAM EXCEED 3.00 M., A BRACING SHALL BE PLACED IN SUCH A WAY THAT THE DISTANCE FROM THE BOTTOM OF THE CAP BEAM TO THE CENTERLINE OF THE BRACING IS NOT MORE THAN 3.00 M.
   B) IF THE DISTANCE BETWEEN THE CENTERLINE OF THE BRACING TO THE EXISTING GROUND LEVEL EXCEED 3.00 M., ADDITIONAL BRACINGS SHALL BE PROVIDED AT AN INTERVAL NOT MORE THAN 3.00 M.
7. *ADJUST SPACING OF STEEL REINFORCEMENT IN TABLE BY @ 0.10 (TYP.) TO RESIST EARTHQUAKE FORCE. (IN CASE OF BRIDGE LOCATED IN SEISMIC LEVEL 1B AND 2)
8. IF THE DISTANCE BETWEEN THE CENTERLINE OF THE BRACING TO THE EXISTING GROUND LEVEL OF ABUTMENT EXCEED 4.00 M., OTHER TYPE OF ABUTMENT AS DWG. NO. PB–301 SHALL BE USED.
9. R = 0.50 M. FOR THE BRIDGE WITHOUT SIDEWALK (P = 0.00). FOR THE BRIDGE WITH SIDEWALK OF P = 0.50 AND 1.00, R = 0.50 M. AND 1.00 M., RESPECTIVELY.
10. USING 0.45 WHEN PILE BENT AND BEAM ARE IN SALTWATER
11. LAP SPLICE OF MAIN REINFORCING BAR IS NOT PERMITTED FOR SEISMIC LEVEL 1B AND 2

KINGDOM OF THAILAND

MINISTRY OF TRANSPORT
DEPARTMENT OF HIGHWAYS

STANDARD DRAWING

9.00–15.00 M. ROADWAY WIDTH SLAB BRIDGE, 1°–45° SKEW
WALL BRACING FOR SPREAD FOOTING PIER DETAIL

DESIGNED : D.O.H. & CONSULTANTS	**CHECKED :** BUREAU OF LOCATION & DESIGN	**DATE :** OCT 2015	
SUBMITTED : (DIRECTOR OF LOCATION & DESIGN BUREAU)		**SCALE :** AS SHOWN	
APPROVED : (FOR DIRECTOR GENERAL)		**DWG NO.** PB–304	
		SHEET NO. 250/R1	

REV.	REVISION	SIGNATURE	DATE
REV.1	REVISION 1/2017		JUN 2017

TABLE OF PILE BENT DIMENSIONS

ROADWAY WIDTH M.	LENGTH OF CAP BEAM A SEC θ M.	DOWEL SPACING B SEC θ M.	SPAN 5.00 M. COL SPG. C SEC θ M.	SPAN 5.00 M. NO.OF COLUMN	SPAN 6.00 M. COL SPG. C SEC θ M.	SPAN 6.00 M. NO.OF COLUMN	SPAN 7.00 M. COL SPG. C SEC θ M.	SPAN 7.00 M. NO.OF COLUMN	SPAN 8.00 M. COL SPG. C SEC θ M.	SPAN 8.00 M. NO.OF COLUMN	SPAN 9.00 M. COL SPG. C SEC θ M.	SPAN 9.00 M. NO.OF COLUMN	SPAN 10.00 M. COL SPG. C SEC θ M.	SPAN 10.00 M. NO.OF COLUMN	SPAN 12.00 M. COL SPG. C SEC θ M.	SPAN 12.00 M. NO.OF COLUMN
9.00	(9.00 + 2R) SEC θ	1.00 SEC θ	3.00 SEC θ	4	3.00 SEC θ	4	2.25 SEC θ	5	2.25 SEC θ	5	1.50 SEC θ	7	1.50 SEC θ	7	(1.25–1.30) SEC θ	8
10.00	(10.00 + 2R) SEC θ	1.00 SEC θ	2.50 SEC θ	5	2.50 SEC θ	5	2.00 SEC θ	6	2.00 SEC θ	6	(1.42–1.45) SEC θ	8	(1.42–1.45) SEC θ	8	1.25 SEC θ	9
11.00	(11.00 + 2R) SEC θ	1.00 SEC θ	2.75 SEC θ	5	2.75 SEC θ	5	(1.80–1.85) SEC θ	7	(1.80–1.85) SEC θ	7	(1.56–1.60) SEC θ	8	(1.56–1.60) SEC θ	8	1.375 SEC θ	9
12.00	(12.00 + 2R) SEC θ	1.00 SEC θ	2.40 SEC θ	6	2.40 SEC θ	6	2.00 SEC θ	7	2.00 SEC θ	7	1.50 SEC θ	9	1.50 SEC θ	9	(1.31–1.34) SEC θ	10
13.00	(13.00 + 2R) SEC θ	1.00 SEC θ	2.60 SEC θ	6	2.60 SEC θ	6	(1.85–1.86) SEC θ	8	(1.85–1.86) SEC θ	8	(1.44–1.46) SEC θ	10	(1.44–1.46) SEC θ	10	1.30 SEC θ	11
14.00	(14.00 + 2R) SEC θ	1.00 SEC θ	(2.30–2.40) SEC θ	7	(2.30–2.40) SEC θ	7	2.00 SEC θ	8	2.00 SEC θ	8	1.40 SEC θ	11	1.40 SEC θ	11	(1.24–1.28) SEC θ	12
15.00	(15.00 + 2R) SEC θ	1.00 SEC θ	2.50 SEC θ	7	2.50 SEC θ	7	1.875 SEC θ	9	1.875 SEC θ	9	1.50 SEC θ	11	1.50 SEC θ	11	1.25 SEC θ	13

REMARK : R = 0.50 AND 1.00 M. FOR THE BRIDGE WITHOUT SIDEWALK AND WITH SIDEWALK, RESPECTIVELY.

TABLE OF CAPBEAM WIDTH (W_{CAB})							
CAP–BEAM WIDTH (W_{CAB})	CENTER TO CENTER SPAN (M.)						
	5.00	6.00	7.00	8.00	9.00	10.00	12.00
0° ≤ SKEW ≤ 25°	0.50	0.50	0.50	0.50	0.50	0.50	0.50
25° < SKEW ≤ 45°	0.55	0.55	0.55	0.60	0.60	0.60	0.60

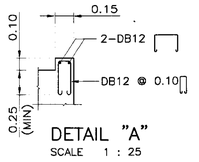

DETAIL "A"
SCALE 1 : 25

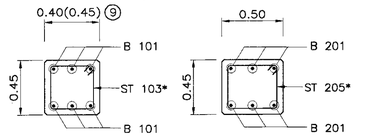

SECTION E – E
SCALE 1 : 25

SECTION F – F
SCALE 1 : 25

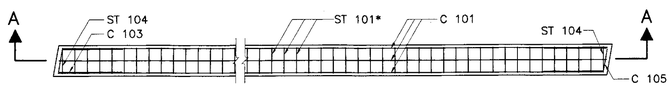

CAP–BEAM
SCALE 1 : 75

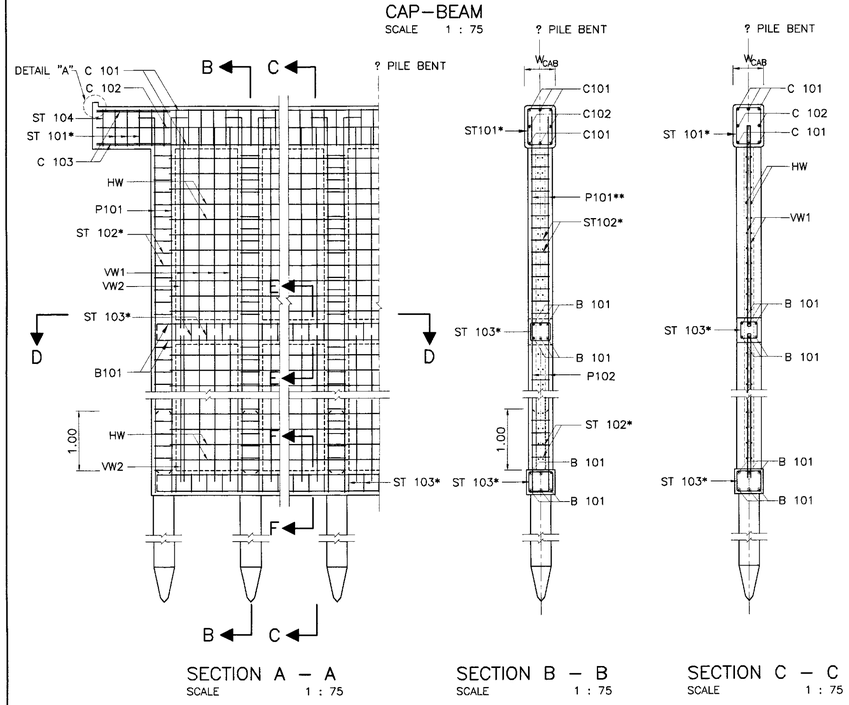

SECTION A – A
SCALE 1 : 75

SECTION B – B
SCALE 1 : 75

SECTION C – C
SCALE 1 : 75

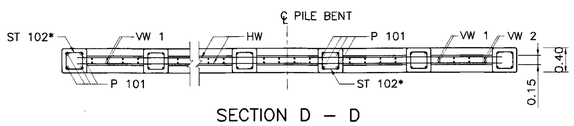

SECTION D – D

PILE BENT DETAILS
SCALE 1 : 75

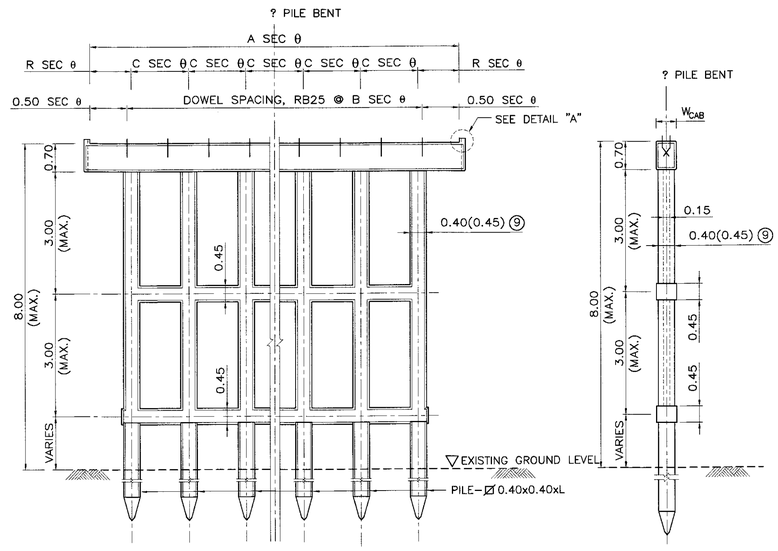

TRANSVERSE ELEVATION
SCALE 1 : 75

SIDE ELEVATION
SCALE 1 : 75

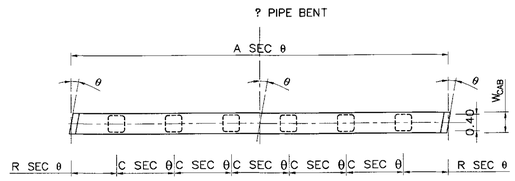

PLAN

PILE BENT DETAILS
SCALE 1 : 75

TABLE OF REINFORCEMENT

BAR BENDING DIAGRAMS	No.	BAR MARK	SPAN 5.00 M. REINF.	SPAN 6.00 M. REINF.	SPAN 7.00 M. REINF.	SPAN 8.00 M. REINF.	SPAN 9.00 M. REINF.	SPAN 10.00 M. REINF.	SPAN 12.00 M. REINF.
	①	C 101	6–DB25	6–DB25	6–DB25	6–DB25	6–DB25	8–DB25	8–DB25
	②	C 102	2–DB12	2–DB12	2–DB12	2–DB12	2–DB12	2–DB12	2–DB12
	③	C 103	4–DB12	4–DB12	4–DB12	4–DB12	4–DB12	4–DB12	4–DB12
	④	ST 101	RB9 @ 0.20	RB9 @ 0.20	RB9 @ 0.20	RB9 @ 0.20	RB9 @ 0.20	RB9 @ 0.20	RB9 @ 0.20
	⑤	ST 102	RB9 @ 0.20	RB9 @ 0.20	RB9 @ 0.20	RB9 @ 0.20	RB9 @ 0.20	RB9 @ 0.20	RB9 @ 0.20
	⑥	ST 103	DB12 @ 0.20	DB12 @ 0.20	DB12 @ 0.20	DB12 @ 0.20	DB12 @ 0.20	DB12 @ 0.20	DB12 @ 0.20
	⑦	ST 104	2–RB9	2–RB9	2–RB9	2–RB9	2–RB9	2–RB9	2–RB9
	⑧	B 101	6–DB25	6–DB25	6–DB25	6–DB25	6–DB25	6–DB25	6–DB25
	⑨+	P 101 (LEVEL 1)	4–DB25	4–DB25	4–DB25	4–DB25	4–DB25	4–DB25	4–DB25
		P 101 (LEVEL 2)	8–DB25	8–DB25	8–DB25	8–DB25	8–DB25	8–DB25	8–DB25
	⑩+	P 102 (LEVEL 1)	4–DB25	4–DB25	4–DB25	4–DB25	4–DB25	4–DB25	4–DB25
		P 102 (LEVEL 2)	8–DB25	8–DB25	8–DB25	8–DB25	8–DB25	8–DB25	8–DB25
	⑪	VW 1	DB12 @ 0.25	DB12 @ 0.25	DB12 @ 0.25	DB12 @ 0.25	DB12 @ 0.25	DB12 @ 0.25	DB12 @ 0.25
	⑫++	VW 2	2–DB12	2–DB12	2–DB12	2–DB12	2–DB12	2–DB12	2–DB12
	⑬	HW	DB12 @ 0.25	DB12 @ 0.25	DB12 @ 0.25	DB12 @ 0.25	DB12 @ 0.25	DB12 @ 0.25	DB12 @ 0.25

REMARK : ⑨+, ⑩+ = REINFORCEMENT NUMBERS OF P 102 AND P 102 ARE SHOWN PER COLUMN RELEVANT TO SEISMIC LEVEL 1 (1A OR 1B) AND 2, ⑫++ = REINFORCEMENT FOR EACH SIDE

TABLE OF SEC θ

θ, DEGREE	0	5	10	15	20	25	30	35	40	45
SEC θ	1.0000	1.0038	1.0154	1.0353	1.0642	1.1034	1.1547	1.2208	1.3054	1.4142

NOTES :

1. ALL DIMENSIONS SHOWN ARE IN METERS UNLESS OTHERWISE INDICATED.
2. DESIGN LIVE LOAD : HL–93
3. A MINIMUM ULTIMATE COMPRESSIVE STRENGTH FOR A 150x150x150 MM. CUBE AT 28 DAYS AS FOLLOWS:
   A) FOR PILE BENT/CAP BEAM 35 MPa. (357 KG/CM^2)
   B) FOR FOOTING/R.C. DRIVEN PILE 35 MPa. (357 KG/CM^2)
   C) FOR PRECAST DRIVEN PILE 45 MPa. (459 KG/CM^2)
   D) FOR SIDEWALK AND BARRIER 35 MPa. (357 KG/CM^2)
4. REBAR SIZES SMALLER THAN 12 MM. SHALL BE TIS 20 GRADE SR 24 PLAIN ROUND BARS, OTHERS SHALL BE TIS 24 GRADE SD 40 DEFORMED BARS UNLESS UNLESS OTHERWISE INDICATED.
5. EACH PILE SHALL BE DRIVEN TO A DEPTH WHERE SCOUR WILL NOT AFFECT CAPACITY, THE MINIMUM ALLOWABLE CAPACITY OF 0.50 MM. (50 TON) FOR EACH PILE AND A MINIMUM 3.50 M. EMBEDED LENGTH UNDER A DEPTH ARE REQUIRED
6. HORIZONTAL CROSS BRACING BETWEEN COLUMNS OF PILE BENT SHALL BE PROVIDED AS FOLLOWS:
   A) IF THE DISTANCE FROM EXISTING GROUND LEVEL TO THE BOTTOM OF THE CAP BEAM EXCEED 3.00 M., A BRACING SHALL BE PLACED IN SUCH A WAY THAT THE DISTANCE FROM THE BOTTOM OF THE CAP BEAM TO THE CENTERLINE OF THE BRACING IS NOT MORE THAN 3.00 M.
   B) IF THE DISTANCE BETWEEN THE CENTERLINE OF THE BRACING TO THE EXISTING GROUND LEVEL EXCEED 3.00 M., ADDITIONAL BRACINGS SHALL BE PROVIDED AT AN INTERVAL NOT MORE THAN 3.00 M.
7. *ADJUST SPACING OF STEEL REINFORCEMENT IN TABLE BY @ 0.10 (TYP.) TO RESIST EARTHQUAKE FORCE. (IN CASE OF BRIDGE LOCATED IN SEISMIC LEVEL 1 AND 2)
8. R = 0.50 M. FOR THE BRIDGE WITHOUT SIDEWALK (P = 0.00). FOR THE BRIDGE WITH SIDEWALK OF P = 0.50 AND 1.00, R = 0.50 M. AND 1.00 M., RESPECTIVELY.

⑨ USING 0.45 WHEN PILE BENT AND BEAM ARE IN SALTWATER

KINGDOM OF THAILAND

MINISTRY OF TRANSPORT

DEPARTMENT OF HIGHWAYS

STANDARD DRAWING

9.00–15.00 M. ROADWAY WIDTH SLAB BRIDGE, 1°–45° SKEW

WALL BRACING FOR PILE BENT DETAIL

DESIGNED : D.O.H. & CONSULTANTS	**CHECKED :** BUREAU OF LOCATION & DESIGN	**DATE :** OCT 2015	
SUBMITTED : (DIRECTOR OF LOCATION & DESIGN BUREAU)		**SCALE :** AS SHOWN	
APPROVED : (FOR DIRECTOR GENERAL)		**DWG NO.** PB–305	
		SHEET NO. 251/R1	

REV.	REVISION	SIGNATURE	DATE
REV.1	REVISION 1/2017		JUN 2017

TABLE OF PIER DIMENSIONS

ROADWAY WIDTH M.	LENGTH OF CAP BEAM A SEC θ M.	DOWEL SPACING B SEC θ M.	SPAN 5.00 M. COL SPG. C SEC θ M.	SPAN 5.00 M. NO.OF COLUMN	SPAN 6.00 M. COL SPG. C SEC θ M.	SPAN 6.00 M. NO.OF COLUMN	SPAN 7.00 M. COL SPG. C SEC θ M.	SPAN 7.00 M. NO.OF COLUMN	SPAN 8.00 M. COL SPG. C SEC θ M.	SPAN 8.00 M. NO.OF COLUMN	SPAN 9.00 M. COL SPG. C SEC θ M.	SPAN 9.00 M. NO.OF COLUMN	SPAN 10.00 M. COL SPG. C SEC θ M.	SPAN 10.00 M. NO.OF COLUMN	SPAN 12.00 M. COL SPG. C SEC θ M.	SPAN 12.00 M. NO.OF COLUMN
9.00	(9.00 + 2R) SEC θ	1.00 SEC θ	3.00 SEC θ	4	3.00 SEC θ	4	2.25 SEC θ	5	2.25 SEC θ	5	1.50 SEC θ	7	1.50 SEC θ	7	(1.25–1.30) SEC θ	8
10.00	(10.00 + 2R) SEC θ	1.00 SEC θ	2.50 SEC θ	5	2.50 SEC θ	5	2.00 SEC θ	6	2.00 SEC θ	6	(1.42–1.45) SEC θ	8	(1.42–1.45) SEC θ	8	1.25 SEC θ	9
11.00	(11.00 + 2R) SEC θ	1.00 SEC θ	2.75 SEC θ	5	2.75 SEC θ	5	(1.80–1.85) SEC θ	7	(1.80–1.85) SEC θ	7	(1.56–1.60) SEC θ	8	(1.56–1.60) SEC θ	8	1.375 SEC θ	9
12.00	(12.00 + 2R) SEC θ	1.00 SEC θ	2.40 SEC θ	6	2.40 SEC θ	6	2.00 SEC θ	7	2.00 SEC θ	7	1.50 SEC θ	9	1.50 SEC θ	9	(1.31–1.34) SEC θ	10
13.00	(13.00 + 2R) SEC θ	1.00 SEC θ	2.60 SEC θ	6	2.60 SEC θ	6	(1.85–1.86) SEC θ	8	(1.85–1.86) SEC θ	8	(1.44–1.46) SEC θ	10	(1.44–1.46) SEC θ	10	1.30 SEC θ	11
14.00	(14.00 + 2R) SEC θ	1.00 SEC θ	(2.30–2.40) SEC θ	7	(2.30–2.40) SEC θ	7	2.00 SEC θ	8	2.00 SEC θ	8	1.40 SEC θ	11	1.40 SEC θ	11	(1.24–1.28) SEC θ	12
15.00	(15.00 + 2R) SEC θ	1.00 SEC θ	2.50 SEC θ	7	2.50 SEC θ	7	1.875 SEC θ	9	1.875 SEC θ	9	1.50 SEC θ	11	1.50 SEC θ	11	1.25 SEC θ	13

REMARK : R = 0.50 AND 1.00 M. FOR THE BRIDGE WITHOUT SIDEWALK AND WITH SIDEWALK, RESPECTIVELY.

TABLE OF SEC θ

θ, DEGREE	0	5	10	15	20	25	30	35	40	45
SEC θ	1.0000	1.0038	1.0154	1.0353	1.0642	1.1034	1.1547	1.2208	1.3054	1.4142

TABLE OF CAPBEAM WIDTH (W_{CAB})

CAP–BEAM WIDTH (W_{CAB})	CENTER TO CENTER SPAN (M.)						
	5.00	6.00	7.00	8.00	9.00	10.00	12.00
0° ≤ SKEW < 25°	0.50	0.50	0.50	0.50	0.50	0.50	0.50
25° < SKEW < 45°	0.55	0.55	0.55	0.60	0.60	0.60	0.60

TABLE OF REINFORCEMENT

BAR BENDING DIAGRAMS	No.	BAR MARK	SPAN 5.00 M. REINF.	SPAN 6.00 M. REINF.	SPAN 7.00 M. REINF.	SPAN 8.00 M. REINF.	SPAN 9.00 M. REINF.	SPAN 10.00 M. REINF.	SPAN 12.00 M. REINF.
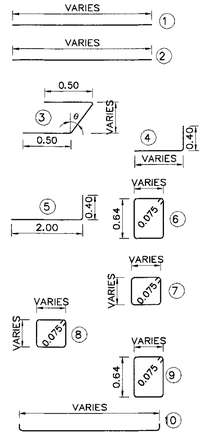	①	C 101	6–DB25	6–DB25	6–DB25	6–DB25	6–DB25	8–DB25	8–DB25
	②	C 102	2–DB12	2–DB12	2–DB12	2–DB12	2–DB12	2–DB12	2–DB12
	③	C 103	4–DB12	4–DB12	4–DB12	4–DB12	4–DB12	4–DB12	4–DB12
	④+	CN 101 (LEVEL 1)	4–DB25	4–DB25	4–DB25	4–DB25	4–DB25	4–DB25	4–DB25
		CN 101 (LEVEL 2)	8–DB25	8–DB25	8–DB25	8–DB25	8–DB25	8–DB25	8–DB25
	⑤+	CN 102	4–DB25	4–DB25	4–DB25	4–DB25	4–DB25	4–DB25	4–DB25
	⑥	ST 101	DB12 @ 0.20	DB12 @ 0.20	DB12 @ 0.20	DB12 @ 0.20	DB12 @ 0.20	DB12 @ 0.20	DB12 @ 0.20
	⑦	ST 102	DB12 @ 0.20	DB12 @ 0.20	DB12 @ 0.20	DB12 @ 0.20	DB12 @ 0.20	DB12 @ 0.20	DB12 @ 0.20
	⑧	ST 103	DB12 @ 0.20	DB12 @ 0.20	DB12 @ 0.20	DB12 @ 0.20	DB12 @ 0.20	DB12 @ 0.20	DB12 @ 0.20
	⑨	ST 104	2–RB9	2–RB9	2–RB9	2–RB9	2–RB9	2–RB9	2–RB9
	⑩	B 101	6–DB25	6–DB25	6–DB25	6–DB25	6–DB25	6–DB25	6–DB25
	⑪	FR 101	DB20 @ 0.15	DB20 @ 0.15	DB20 @ 0.15	DB20 @ 0.15	DB20 @ 0.15	DB20 @ 0.15	DB20 @ 0.15
	⑫	FR 102	DB12 @ 0.15	DB12 @ 0.15	DB12 @ 0.15	DB12 @ 0.15	DB12 @ 0.15	DB12 @ 0.15	DB12 @ 0.15
	⑬	FR 103	DB25 @ 0.15	DB25 @ 0.15	DB25 @ 0.15	DB25 @ 0.15	DB25 @ 0.15	DB25 @ 0.15	DB25 @ 0.15
	⑭	FR 104	DB12 @ 0.15	DB12 @ 0.15	DB12 @ 0.15	DB12 @ 0.15	DB12 @ 0.15	DB12 @ 0.15	DB12 @ 0.15
	⑮	VW 1	DB12 @ 0.25	DB12 @ 0.25	DB12 @ 0.25	DB12 @ 0.25	DB12 @ 0.25	DB12 @ 0.25	DB12 @ 0.25
	⑯	HW	RB9 @ 0.20	RB9 @ 0.20	RB9 @ 0.20	RB9 @ 0.20	RB9 @ 0.20	RB9 @ 0.20	RB9 @ 0.20

REMARK : E = 1.50 FOR PIER HEIGHT (H) ≤ 8.00, E = 1.20 FOR PIER HEIGHT (H) < 3.00 ; 4 ⑤ ⑮ REINFORCEMENT NUMBERS OF CN 101 AND CN 102 ARE SHOWN PER COLUMN RELEVANT TO SEISMIC LEVEL 1 (1A OR 1B) AND 2

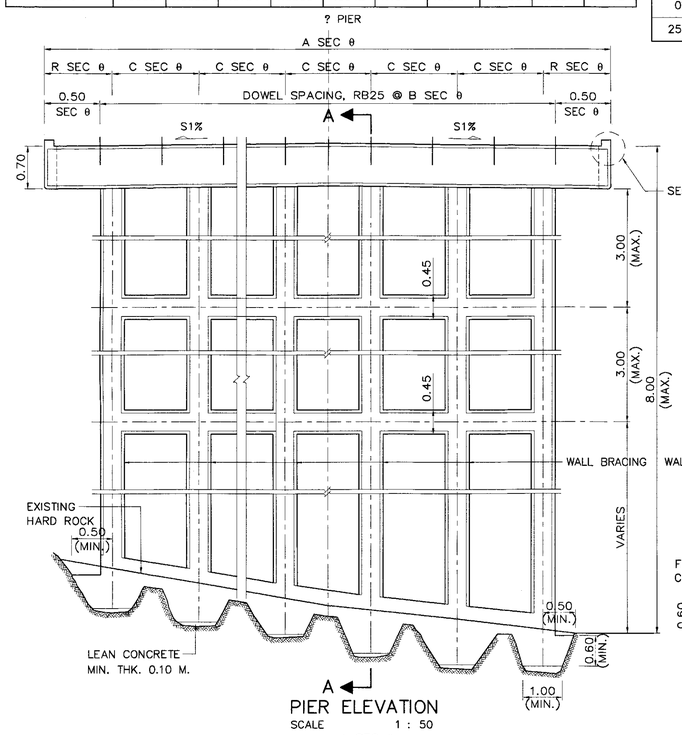

PIER ELEVATION
SCALE 1 : 50

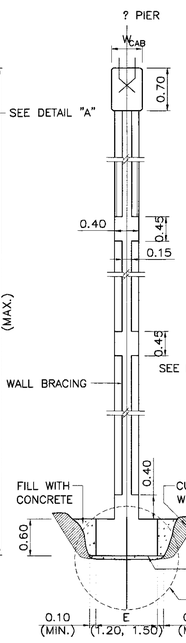

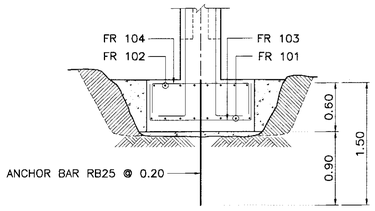

DETAIL "1"
SCALE 1 : 37.5

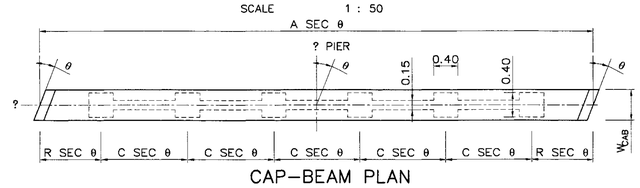

CAP–BEAM PLAN
SCALE 1 : 50

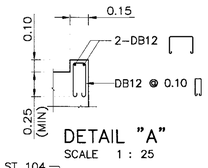

DETAIL "A"
SCALE 1 : 25

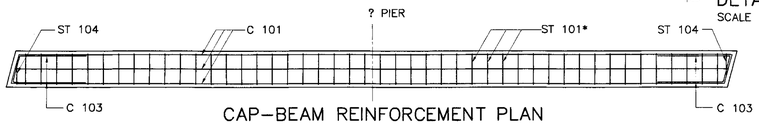

CAP–BEAM REINFORCEMENT PLAN
SCALE 1 : 50

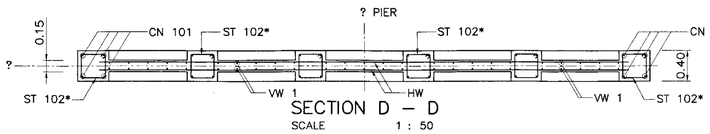

SECTION D – D
SCALE 1 : 50

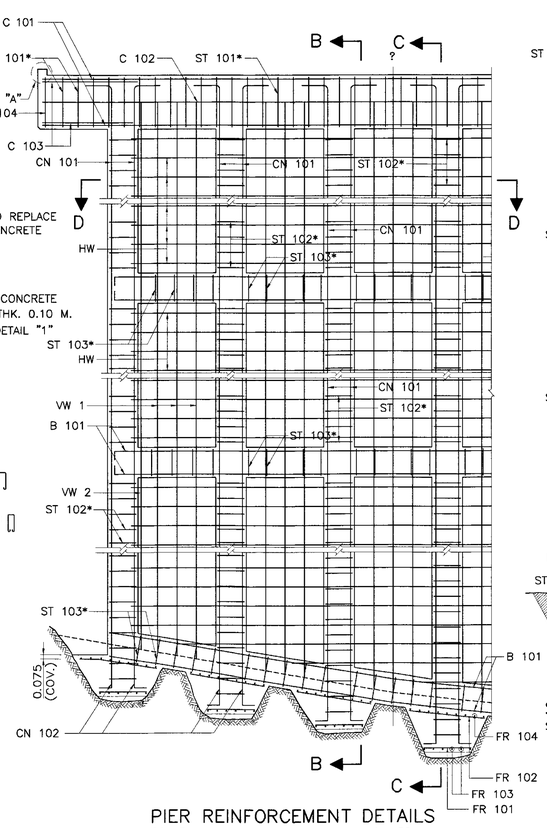

PIER REINFORCEMENT DETAILS
SCALE 1 : 50

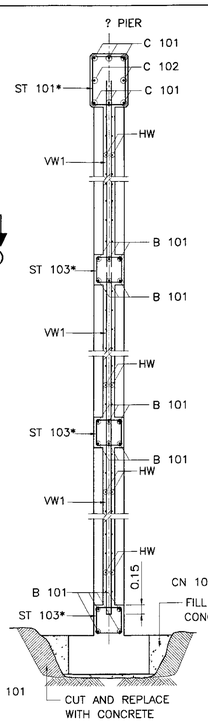

SECTION B – B
SCALE 1 : 50

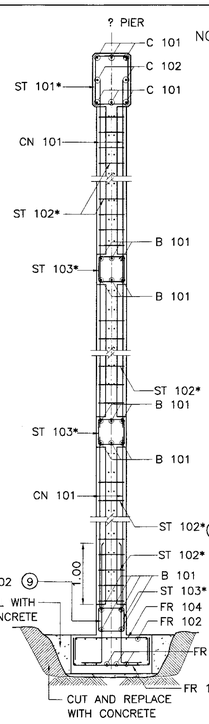

SECTION C – C
SCALE 1 : 50

NOTES :

1. ALL DIMENSIONS SHOWN ARE IN METERS UNLESS OTHERWISE INDICATED.
2. DESIGN LIVE LOAD : HL–93
3. A MINIMUM ULTIMATE COMPRESSIVE STRENGTH FOR A 150x150x150 MM. CUBE AT 28 DAYS AS FOLLOWS:
   A) FOR PILE BENT/CAP BEAM 35 MPa. (357 KG/CM^2)
   B) FOR FOOTING/R.C. DRIVEN PILE 35 MPa. (357 KG/CM^2)
   C) FOR PRECAST DRIVEN PILE 45 MPa. (459 KG/CM^2)
   D) FOR SIDEWALK AND BARRIER 35 MPa. (357 KG/CM^2)
4. REBAR SIZES SIZES SMALLER THAN 12 MM. SHALL BE TIS 20 GRADE SR 24 PLAIN ROUND BARS, OTHERS SHALL BE TIS 24 GRADE SD 40 DEFORMED BARS UNLESS UNLESS OTHERWISE INDICATED.
5. EACH PILE SHALL BE DRIVEN TO A DEPTH WHERE SCOUR WILL NOT AFFECT CAPACITY, THE MINIMUM ALLOWABLE BEARING CAPACITY OF 0.80 MPa.(80 TON/M.^{2})
6. HORIZONTAL CROSS BRACING BETWEEN COLUMNS OF PILE BENT SHALL BE PROVIDED AS FOLLOWS:
   A) IF THE DISTANCE FROM EXISTING GROUND LEVEL TO THE BOTTOM OF THE CAP BEAM EXCEED 3.00 M., A BRACING SHALL BE PLACED IN SUCH A WAY THAT THE DISTANCE FROM THE BOTTOM OF THE CAP BEAM TO THE CENTERLINE OF THE BRACING IS NOT MORE THAN 3.00 M.
   B) IF THE DISTANCE BETWEEN THE CENTERLINE OF THE BRACING TO THE EXISTING GROUND LEVELEXCEED 3.00 M., ADDITIONAL BRACINGS SHALL BE PROVIDED AT AN INTERVAL NOT MORE THAN 3.00 M.
7. *ADJUST SPACING OF STEEL REINFORCEMENT IN TABLE BY @ 0.10 (TYP.) TO RESIST EARTHQUAKE FORCE.(IN CASE OF BRIDGE LOCATED IN SEISMIC LEVEL 1B AND 2)
8. R = 0.50 M. FOR THE BRIDGE WITHOUT SIDEWALK (P = 0.00). FOR THE BRIDGE WITH SIDEWALK OF P = 0.50 AND 1.00, R = 0.50 M. AND 1.00 M., RESPECTIVELY.
9. LAP SPLICE OF MAIN REINFORCING BAR IS NOT PERMITTED FOR SEISMIC LEVEL 1B AND 2

KINGDOM OF THAILAND

MINISTRY OF TRANSPORT

DEPARTMENT OF HIGHWAYS

STANDARD DRAWING

9.00–15.00 M. ROADWAY WIDTH SLAB BRIDGE, 1°–45° SKEW

WALL BRACING PIER ON BED ROCK DETAIL

DESIGNED : D.O.H. & CONSULTANTS	CHECKED : BUREAU OF LOCATION & DESIGN	DATE : OCT 2015	
SUBMITTED : (DIRECTOR OF LOCATION & DESIGN BUREAU)		SCALE : AS SHOWN	
APPROVED : (FOR DIRECTOR GENERAL)		DWG NO. PB–306	
		SHEET NO. 252/R1	

REV.	REVISION	SIGNATURE	DATE
REV.1	REVISION 1/2017		JUN 2017

TABLE OF PIER DIMENSIONS

ROADWAY WIDTH M.	LENGTH OF CAP BEAM A SEC θ M.	DOWEL SPACING B SEC θ M.	SPAN 5.00 M. COL SPG. C SEC θ M.	SPAN 5.00 M. NO.OF COLUMN	SPAN 6.00 M. COL SPG. C SEC θ M.	SPAN 6.00 M. NO.OF COLUMN	SPAN 7.00 M. COL SPG. C SEC θ M.	SPAN 7.00 M. NO.OF COLUMN	SPAN 8.00 M. COL SPG. C SEC θ M.	SPAN 8.00 M. NO.OF COLUMN	SPAN 9.00 M. COL SPG. C SEC θ M.	SPAN 9.00 M. NO.OF COLUMN	SPAN 10.00 M. COL SPG. C SEC θ M.	SPAN 10.00 M. NO.OF COLUMN	SPAN 12.00 M. COL SPG. C SEC θ M.	SPAN 12.00 M. NO.OF COLUMN
9.00	(9.00 + 2R) SEC θ	1.00 SEC θ	3.00 SEC θ	4	3.00 SEC θ	4	2.25 SEC θ	5	2.25 SEC θ	5	1.50 SEC θ	7	1.50 SEC θ	7	(1.25–1.30) SEC θ	8
10.00	(10.00 + 2R) SEC θ	1.00 SEC θ	2.50 SEC θ	5	2.50 SEC θ	5	2.00 SEC θ	6	2.00 SEC θ	6	(1.42–1.45) SEC θ	8	(1.42–1.45) SEC θ	8	1.25 SEC θ	9
11.00	(11.00 + 2R) SEC θ	1.00 SEC θ	2.75 SEC θ	5	2.75 SEC θ	5	(1.80–1.85) SEC θ	7	(1.80–1.85) SEC θ	7	(1.56–1.60) SEC θ	8	(1.56–1.60) SEC θ	8	1.375 SEC θ	9
12.00	(12.00 + 2R) SEC θ	1.00 SEC θ	2.40 SEC θ	6	2.40 SEC θ	6	2.00 SEC θ	7	2.00 SEC θ	7	1.50 SEC θ	9	1.50 SEC θ	9	(1.31–1.34) SEC θ	10
13.00	(13.00 + 2R) SEC θ	1.00 SEC θ	2.60 SEC θ	6	2.60 SEC θ	6	(1.85–1.86) SEC θ	8	(1.85–1.86) SEC θ	8	(1.44–1.46) SEC θ	10	(1.44–1.46) SEC θ	10	1.30 SEC θ	11
14.00	(14.00 + 2R) SEC θ	1.00 SEC θ	(2.30–2.40) SEC θ	7	(2.30–2.40) SEC θ	7	2.00 SEC θ	8	2.00 SEC θ	8	1.40 SEC θ	11	1.40 SEC θ	11	(1.24–1.28) SEC θ	12
15.00	(15.00 + 2R) SEC θ	1.00 SEC θ	2.50 SEC θ	7	2.50 SEC θ	7	1.875 SEC θ	9	1.875 SEC θ	9	1.50 SEC θ	11	1.50 SEC θ	11	1.25 SEC θ	13

REMARK : R = 0.50 AND 1.00 M. FOR THE BRIDGE WITHOUT SIDEWALK AND WITH SIDEWALK, RESPECTIVELY.

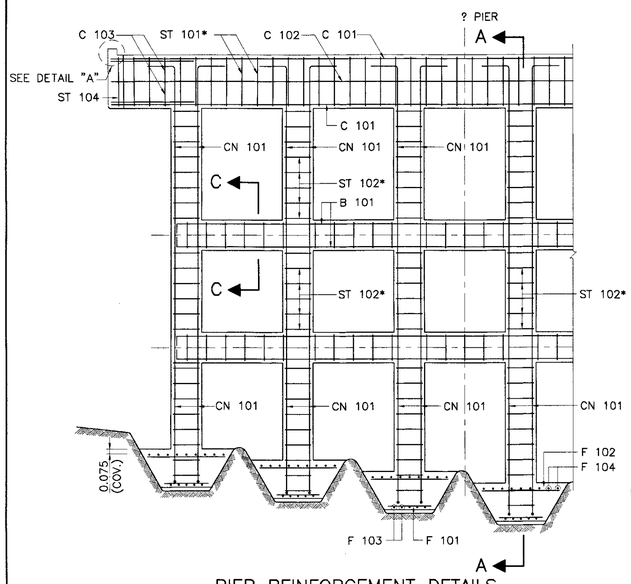

PIER REINFORCEMENT DETAILS
SCALE 1 : 50

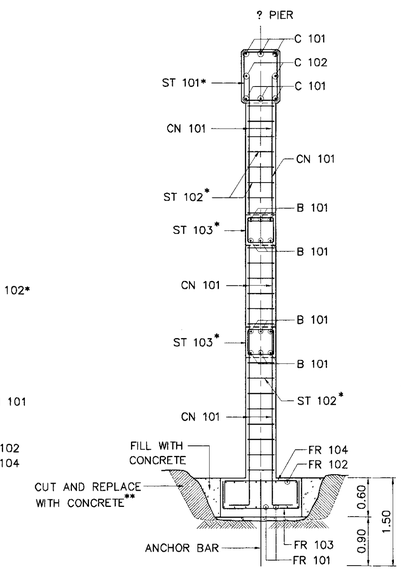

SECTION A – A
SCALE 1 : 50

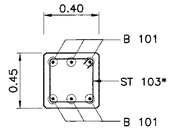

SECTION C – C
SCALE 1 : 25

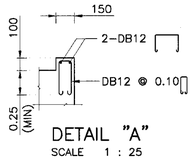

DETAIL "A"
SCALE 1 : 25

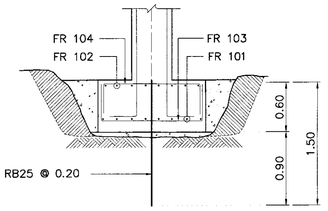

DETAIL "1"
SCALE 1 : 37.5

TABLE OF REINFORCEMENT

BAR BENDING DIAGRAMS	No.	BAR MARK	SPAN 5.00 M. REINF.	SPAN 6.00 M. REINF.	SPAN 7.00 M. REINF.	SPAN 8.00 M. REINF.	SPAN 9.00 M. REINF.	SPAN 10.00 M. REINF.	SPAN 12.00 M. REINF.
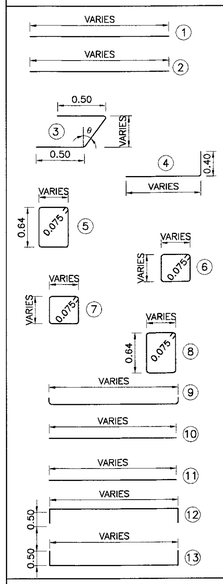	①	C 101	6–DB25	6–DB25	6–DB25	6–DB25	6–DB25	8–DB25	8–DB25
	②	C 102	2–DB12	2–DB12	2–DB12	2–DB12	2–DB12	2–DB12	2–DB12
	③	C 103	4–DB12	4–DB12	4–DB12	4–DB12	4–DB12	4–DB12	4–DB12
	④+	CN 101 (LEVEL 1)	4–DB25	4–DB25	4–DB25	4–DB25	4–DB25	4–DB25	4–DB25
		CN 101 (LEVEL 2)	8–DB25	8–DB25	8–DB25	8–DB25	8–DB25	8–DB25	8–DB25
	⑤	ST 101	DB12 @ 0.20	DB12 @ 0.20	DB12 @ 0.20	DB12 @ 0.20	DB12 @ 0.20	DB12 @ 0.20	DB12 @ 0.20
	⑥	ST 102	DB12 @ 0.20	DB12 @ 0.20	DB12 @ 0.20	DB12 @ 0.20	DB12 @ 0.20	DB12 @ 0.20	DB12 @ 0.20
	⑦	ST 103	DB12 @ 0.20	DB12 @ 0.20	DB12 @ 0.20	DB12 @ 0.20	DB12 @ 0.20	DB12 @ 0.20	DB12 @ 0.20
	⑧	ST 104	2–RB9	2–RB9	2–RB9	2–RB9	2–RB9	2–RB9	2–RB9
	⑨	B 101	6–DB25	6–DB25	6–DB25	6–DB25	6–DB25	6–DB25	6–DB25
	⑩	FR 101	DB20 @ 0.15	DB20 @ 0.15	DB20 @ 0.15	DB20 @ 0.15	DB20 @ 0.15	DB20 @ 0.15	DB20 @ 0.15
	⑪	FR 102	DB12 @ 0.15	DB12 @ 0.15	DB12 @ 0.15	DB12 @ 0.15	DB12 @ 0.15	DB12 @ 0.15	DB12 @ 0.15
	⑫	FR 103	DB25 @ 0.15	DB25 @ 0.15	DB25 @ 0.15	DB25 @ 0.15	DB25 @ 0.15	DB25 @ 0.15	DB25 @ 0.15
	⑬	FR 104	DB12 @ 0.15	DB12 @ 0.15	DB12 @ 0.15	DB12 @ 0.15	DB12 @ 0.15	DB12 @ 0.15	DB12 @ 0.15

REMARK : E = 1.50 FOR PIER HEIGHT (H) ≤ 8.00, E = 1.20 FOR PIER HEIGHT (H) ≤ 3.00 ; ④+ = REINFORCEMENT NUMBERS OF CN 101 IS SHOWN PER COLUMN RELEVANT TO SEISMIC LEVEL 1 (1A OR 1B) AND 2

NOTES :

1. ALL DIMENSIONS SHOWN ARE IN METERS UNLESS OTHERWISE INDICATED.
2. DESIGN LIVE LOAD : HL-93
3. A MINIMUM ULTIMATE COMPRESSIVE STRENGTH FOR A 150x150x150 MM. CUBE AT 28 DAYS AS FOLLOWS:
   A) FOR PILE BENT/CAP BEAM 35 MPa. (357 KG/CM^2)
   B) FOR FOOTING/R.C. DRIVEN PILE 35 MPa. (357 KG/CM^2)
   C) FOR PRECAST DRIVEN PILE 45 MPa. (459 KG/CM^2)
   D) FOR SIDEWALK AND BARRIER 35 MPa. (357 KG/CM^2)
4. REBAR SIZES SMALLER THAN 12 MM. SHALL BE TIS 20 GRADE SR 24 PLAIN ROUND BARS, OTHERS SHALL BE TIS 24 GRADE SD 40 DEFORMED BARS UNLESS UNLESS OTHERWISE INDICATED.
5. EACH SPRED FOOTING SHALL BE LOCATED BELOW TO A DEPTH WHERE SCOUR WILL NOT AFFECT CAPACITY, THE MINIMUM ALLOWABLE BEARING CAPACITY OF 0.80 MPa. (80 TON/M^2)
6. HORIZONTAL CROSS BRACING BETWEEN COLUMNS OF PILE BENT SHALL BE PROVIDED AS FOLLOWS:
   A) IF THE DISTANCE FROM EXISTING GROUND LEVEL TO THE BOTTOM OF THE CAP BEAM EXCEED 3.00 M., A BRACING SHALL BE PLACED IN SUCH A WAY THAT THE DISTANCE FROM THE BOTTOM OF THE CAP BEAM TO THE CENTERLINE OF THE BRACING IS NOT MORE THAN 3.00 M.
   B) IF THE DISTANCE BETWEEN THE CENTERLINE OF THE BRACING TO THE EXISTING GROUND LEVEL EXCEED 3.00 M., ADDITIONAL BRACINGS SHALL BE PROVIDED AT AN INTERVAL NOT MORE THAN 3.00 M.
7. *ADJUST SPACING OF STEEL REINFORCEMENT IN TABLE BY @ 0.10 (TYP.) TO RESIST EARTHQUAKE FORCE. (IN CASE OF BRIDGE LOCATED IN SEISMIC LEVEL 1B AND 2)
8. R = 0.50 M. FOR THE BRIDGE WITHOUT SIDEWALK (P = 0.00). FOR THE BRIDGE WITH SIDEWALK OF P = 0.50 AND 1.00, R = 0.50 M. AND 1.00 M., RESPECTIVELY.

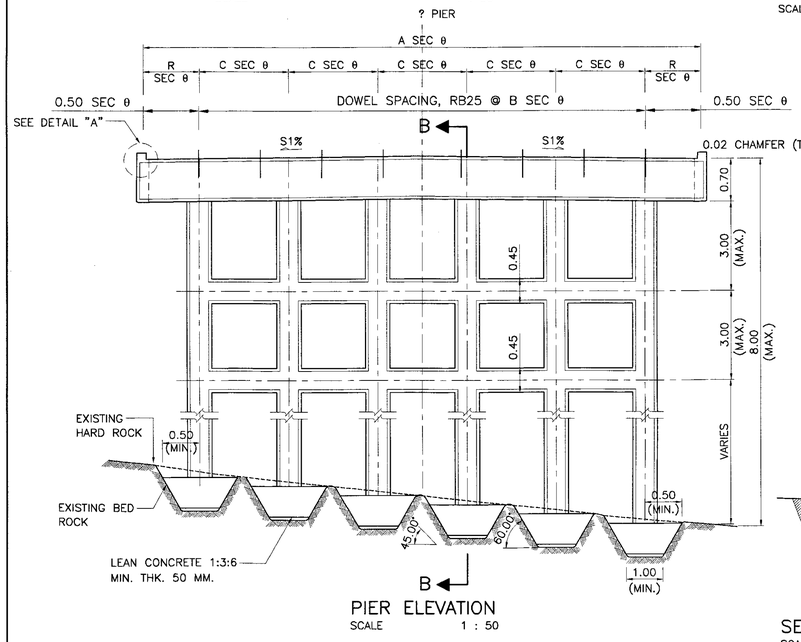

PIER ELEVATION
SCALE 1 : 50

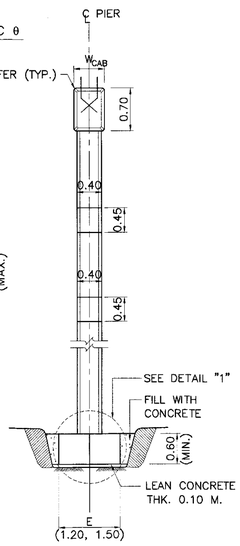

SECTION B – B
SCALE 1 : 50

TABLE OF SEC θ

θ, DEGREE	0	5	10	15	20	25	30	35	40	45
SEC θ	1.0000	1.0038	1.0154	1.0353	1.0642	1.1034	1.1547	1.2208	1.3054	1.4142

TABLE OF CAPBEAM WIDTH (W_{CAB})

CAP–BEAM WIDTH (W_{CAB})	CENTER TO CENTER SPAN (M.)						
	5.00	6.00	7.00	8.00	9.00	10.00	12.00
0° ≤ SKEW ≤ 25°	0.50	0.50	0.50	0.50	0.50	0.50	0.50
25° < SKEW ≤ 45°	0.55	0.55	0.55	0.60	0.60	0.60	0.60

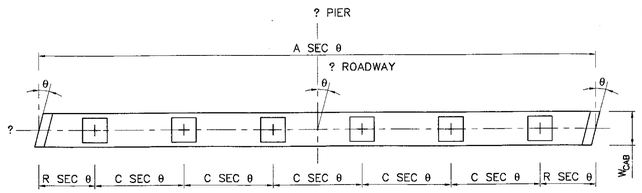

CAP BEAM PLAN
SCALE 1 : 50

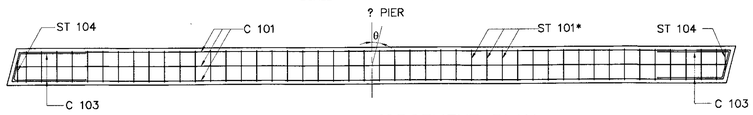

CAP BEAM REINFORCEMENT PLAN
SCALE 1 : 50

KINGDOM OF THAILAND

MINISTRY OF TRANSPORT

DEPARTMENT OF HIGHWAYS

STANDARD DRAWING

9.00–15.00 M. ROADWAY WIDTH SLAB BRIDGE, 1°–45° SKEW

PIER ON BED ROCK DETAIL

DESIGNED : D.O.H. & CONSULTANTS	**CHECKED :** BUREAU OF LOCATION & DESIGN	**DATE :** OCT 2015	
SUBMITTED : (DIRECTOR OF LOCATION & DESIGN BUREAU)		**SCALE :** AS SHOWN	
APPROVED : (FOR DIRECTOR GENERAL)		**DWG NO.** PB–307	
		SHEET NO. 253/RI	

REV.	REVISION	SIGNATURE	DATE
REV.1	REVISION 1/2017		JUN 2017

TABLE OF PIER DIMENSIONS

ROADWAY WIDTH M.	LENGTH OF CAP BEAM A SEC θ M.	DOWEL SPACING B SEC θ M.	SPAN 5.00 M.		SPAN 6.00 M.		SPAN 7.00 M.		SPAN 8.00 M.		SPAN 9.00 M.		SPAN 10.00 M.		SPAN 12.00 M.	
			COL SPG. C SEC θ M.	NO.OF COLUMN	COL SPG. C SEC θ M.	NO.OF COLUMN	COL SPG. C SEC θ M.	NO.OF COLUMN	COL SPG. C SEC θ M.	NO.OF COLUMN	COL SPG. C SEC θ M.	NO.OF COLUMN	COL SPG. C SEC θ M.	NO.OF COLUMN	COL SPG. C SEC θ M.	NO.OF COLUMN
9.00	(9.00 + 2R) SEC θ	1.00 SEC θ	3.00 SEC θ	4	3.00 SEC θ	4	2.25 SEC θ	5	2.25 SEC θ	5	1.50 SEC θ	7	1.50 SEC θ	7	(1.25–1.30) SEC θ	8
10.00	(10.00 + 2R) SEC θ	1.00 SEC θ	2.50 SEC θ	5	2.50 SEC θ	5	2.00 SEC θ	6	2.00 SEC θ	6	(1.42–1.45) SEC θ	8	(1.42–1.45) SEC θ	8	1.25 SEC θ	9
11.00	(11.00 + 2R) SEC θ	1.00 SEC θ	2.75 SEC θ	5	2.75 SEC θ	5	(1.80–1.85) SEC θ	7	(1.80–1.85) SEC θ	7	(1.56–1.60) SEC θ	8	(1.56–1.60) SEC θ	8	1.375 SEC θ	9
12.00	(12.00 + 2R) SEC θ	1.00 SEC θ	2.40 SEC θ	6	2.40 SEC θ	6	2.00 SEC θ	7	2.00 SEC θ	7	1.50 SEC θ	9	1.50 SEC θ	9	(1.31–1.34) SEC θ	10
13.00	(13.00 + 2R) SEC θ	1.00 SEC θ	2.60 SEC θ	6	2.60 SEC θ	6	(1.85–1.86) SEC θ	8	(1.85–1.86) SEC θ	8	(1.44–1.46) SEC θ	10	(1.44–1.46) SEC θ	10	1.30 SEC θ	11
14.00	(14.00 + 2R) SEC θ	1.00 SEC θ	(2.30–2.40) SEC θ	7	(2.30–2.40) SEC θ	7	2.00 SEC θ	8	2.00 SEC θ	8	1.40 SEC θ	11	1.40 SEC θ	11	(1.24–1.28) SEC θ	12
15.00	(15.00 + 2R) SEC θ	1.00 SEC θ	2.50 SEC θ	7	2.50 SEC θ	7	1.875 SEC θ	9	1.875 SEC θ	9	1.50 SEC θ	11	1.50 SEC θ	11	1.25 SEC θ	13

REMARK : R = 0.50 AND 1.00 M. FOR THE BRIDGE WITHOUT SIDEWALK AND WITH SIDEWALK, RESPECTIVELY.

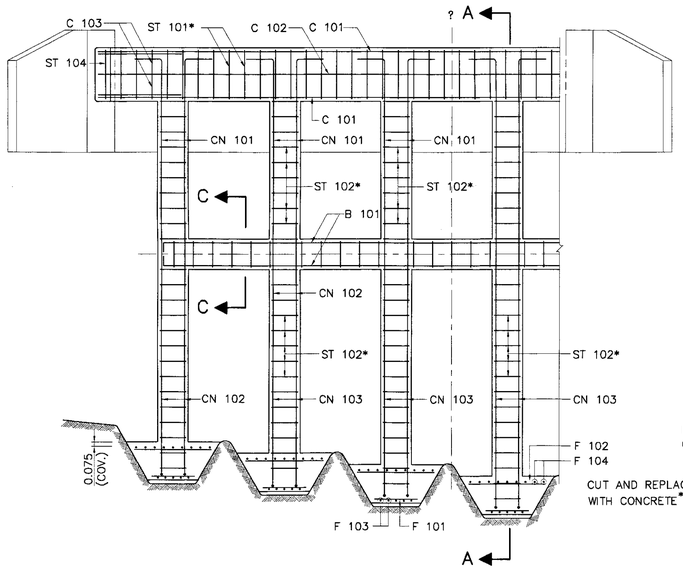

ABUTMENT REINFORCEMENT DETAILS
SCALE 1 : 50

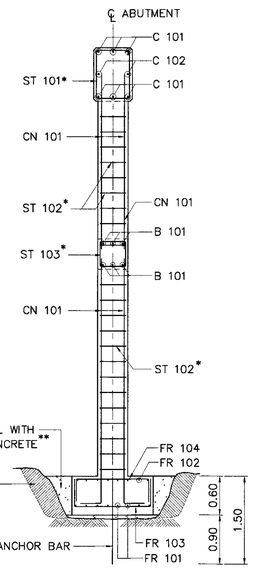

SECTION A – A
SCALE 1 : 50

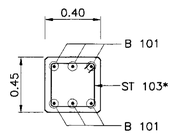

SECTION C – C
SCALE 1 : 25

TABLE OF REINFORCEMENT

BAR BENDING DIAGRAMS	No.	BAR MARK	SPAN 5.00 M. REINF.	SPAN 6.00 M. REINF.	SPAN 7.00 M. REINF.	SPAN 8.00 M. REINF.	SPAN 9000 MM. REINF.	SPAN 10.00 M. REINF.	SPAN 12.00 M. REINF.
VARIES ①	①	C 101	6–DB25	6–DB25	6–DB25	6–DB25	6–DB25	8–DB25	8–DB25
VARIES ②	②	C 102	2–DB12	2–DB12	2–DB12	2–DB12	2–DB12	2–DB12	2–DB12
0.50, ③, θ, VARIES, 0.50	③	C 103	4–DB12	4–DB12	4–DB12	4–DB12	4–DB12	4–DB12	4–DB12
④, 0.40, VARIES	④+	CN 101 (LEVEL 1)	4–DB25	4–DB25	4–DB25	4–DB25	4–DB25	4–DB25	4–DB25
		CN 101 (LEVEL 2)	8–DB25	8–DB25	8–DB25	8–DB25	8–DB25	8–DB25	8–DB25
VARIES, 0.64, 0.075, ⑤	⑤	ST 101	DB12 @ 0.20	DB12 @ 0.20	DB12 @ 0.20	DB12 @ 0.20	DB12 @ 0.20	DB12 @ 0.20	DB12 @ 0.20
VARIES, 0.075, ⑥	⑥	ST 102	DB12 @ 0.20	DB12 @ 0.20	DB12 @ 0.20	DB12 @ 0.20	DB12 @ 0.20	DB12 @ 0.20	DB12 @ 0.20
VARIES, 0.075, ⑦	⑦	ST 103	DB12 @ 0.20	DB12 @ 0.20	DB12 @ 0.20	DB12 @ 0.20	DB12 @ 0.20	DB12 @ 0.20	DB12 @ 0.20
VARIES, 0.64, 0.075, ⑧	⑧	ST 104	2–RB9	2–RB9	2–RB9	2–RB9	2–RB9	2–RB9	2–RB9
VARIES ⑨	⑨	B 101	6–DB25	6–DB25	6–DB25	6–DB25	6–DB25	6–DB25	6–DB25
VARIES ⑩	⑩	FR 101	DB20 @ 0.15	DB20 @ 0.15	DB20 @ 0.15	DB20 @ 0.15	DB20 @ 0.15	DB20 @ 0.15	DB20 @ 0.15
VARIES ⑪	⑪	FR 102	DB12 @ 0.15	DB12 @ 0.15	DB12 @ 0.15	DB12 @ 0.15	DB12 @ 0.15	DB12 @ 0.15	DB12 @ 0.15
VARIES, 0.50 ⑫	⑫	FR 103	DB25 @ 0.15	DB25 @ 0.15	DB25 @ 0.15	DB25 @ 0.15	DB25 @ 0.15	DB25 @ 0.15	DB25 @ 0.15
VARIES, 0.50 ⑬	⑬	FR 104	DB12 @ 0.15	DB12 @ 0.15	DB12 @ 0.15	DB12 @ 0.15	DB12 @ 0.15	DB12 @ 0.15	DB12 @ 0.15

REMARK : E = 1.50 FOR PIER HEIGHT (H) ≤ 8.00, E = 1.20 FOR PIER HEIGHT (H) ≤ 3.00 ; ④+ = REINFORCEMENT NUMBERS OF CN 101 IS SHOWN PER COLUMN RELEVANT TO SEISMIC LEVEL 1 (1A OR 1B) AND 2

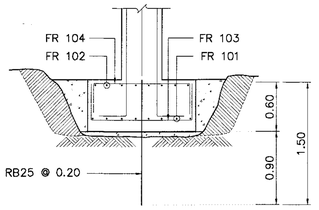

DETAIL "1"
SCALE 1 : 37.5

NOTES :

1. ALL DIMENSIONS SHOWN ARE IN METERS UNLESS OTHERWISE INDICATED.
2. DESIGN LIVE LOAD : HL–93
3. A MINIMUM ULTIMATE COMPRESSIVE STRENGTH FOR A 150x150x150 MM. CUBE AT 28 DAYS AS FOLLOWS:
   A) FOR ABUTMENT/WINGWALL 35 MPa. (357 KG/CM^2)
   B) FOR FOOTING/R.C. DRIVEN PILE 35 MPa. (357 KG/CM^2)
   C) FOR PRECAST DRIVEN PILE 45 MPa. (459 KG/CM^2)
   D) FOR SIDEWALK AND BARRIER 35 MPa. (357 KG/CM^2)
4. REBAR SIZES SMALLER THAN 12 MM. SHALL BE TIS 20 GRADE SR 24 PLAIN ROUND BARS, OTHERS SHALL BE TIS 24 GRADE SD 40 DEFORMED BARS UNLESS UNLESS OTHERWISE INDICATED.
5. EACH SPREAD FOOTING SHALL BE LOCATED BELOW TO A DEPTH WHERE SCOUR WILL NOT AFFECT CAPACITY, THE MINIMUM ALLOWABLE BEARING CAPACITY OF 0.80 MPa. (80 TON/M^2)
6. HORIZONTAL CROSS BRACING BETWEEN COLUMNS OF PILE BENT SHALL BE PROVIDED AS FOLLOWS:
   A) IF THE DISTANCE FROM EXISTING GROUND LEVEL TO THE BOTTOM OF THE CAP BEAM EXCEED 3.00 M., A BRACING SHALL BE PLACED IN SUCH A WAY THAT THE DISTANCE FROM THE BOTTOM OF THE CAP BEAM TO THE CENTERLINE OF THE BRACING IS NOT MORE THAN 3.00 M.
   B) IF THE DISTANCE BETWEEN THE CENTERLINE OF THE BRACING TO THE EXISTING GROUND LEVEL EXCEED 3.00 M., ADDITIONAL BRACINGS SHALL BE PROVIDED AT AN INTERVAL NOT MORE THAN 3.00 M.
7. *ADJUST SPACING OF STEEL REINFORCEMENT IN TABLE BY @ 0.10 (TYP.) TO RESIST EARTHQUAKE FORCE. (IN CASE OF BRIDGE LOCATED IN SEISMIC LEVEL 1B AND 2)
8. IF THE DISTANCE BETWEEN THE CENTERLINE OF THE BRACING TO THE EXISTING GROUND LEVEL OF ABUTMENT EXCEED 4.00 M., OTHER TYPE OF ABUTMENT AS DWG. NO. PB–309 AND PB–310 SHALL BE USED.
9. R = 0.50 M. FOR THE BRIDGE WITHOUT SIDEWALK (P = 0.00). FOR THE BRIDGE WITH SIDEWALK OF P = 0.50 AND 1.00, R = 0.50 M. AND 1.00 M., RESPECTIVELY.

TABLE OF SEC θ

θ, DEGREE	0	5	10	15	20	25	30	35	40	45
SEC θ	1.0000	1.0038	1.0154	1.0353	1.0642	1.1034	1.1547	1.2208	1.3054	1.4142

TABLE OF CAPBEAM WIDTH (W_{CAB})

CAP–BEAM WIDTH (W_{CAB})	CENTER TO CENTER SPAN (M.)						
	5.00	6.00	7.00	8.00	9.00	10.00	12.00
0° ≤ SKEW ≤ 25°	0.50	0.50	0.50	0.50	0.50	0.50	0.50
25° < SKEW ≤ 45°	0.55	0.55	0.55	0.60	0.60	0.60	0.60

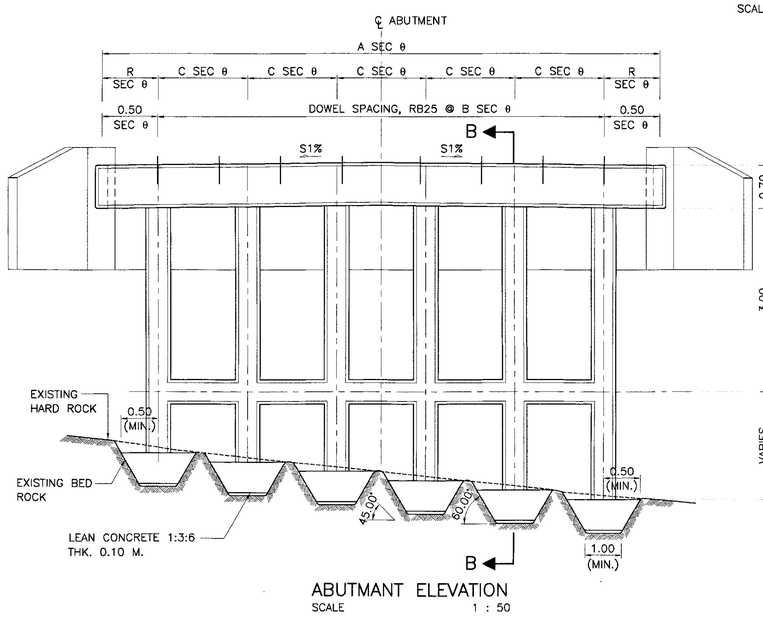

ABUTMANT ELEVATION
SCALE 1 : 50

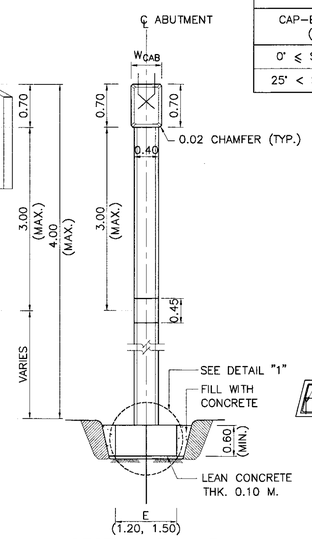

SECTION B – B
SCALE 1 : 50

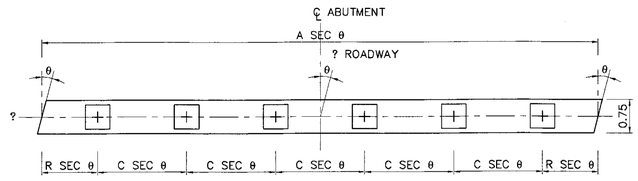

CAP–BEAM PLAN
SCALE 1 : 50

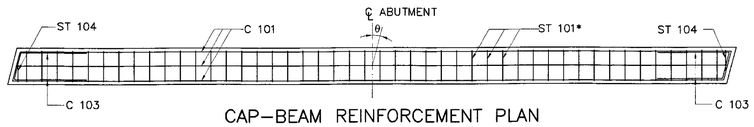

CAP–BEAM REINFORCEMENT PLAN
SCALE 1 : 50

KINGDOM OF THAILAND

MINISTRY OF TRANSPORT

DEPARTMENT OF HIGHWAYS

STANDARD DRAWING

9.00–15.00 M. ROADWAY WIDTH SLAB BRIDGE, 1°–45° SKEW

ABUTMENT ON BED ROCK DETAIL

DESIGNED : D.O.H. & CONSULTANTS	**CHECKED :** BUREAU OF LOCATION & DESIGN	**DATE :** OCT 2015	
SUBMITTED : (DIRECTOR OF LOCATION & DESIGN BUREAU)		**SCALE :** AS SHOWN	
APPROVED : (FOR DIRECTOR GENERAL)		**DWG NO.** PB–308	
		SHEET NO. 254/R1	

REV.	REVISION	SIGNATURE	DATE
REV.1	REVISION 1/2017		JUN 2017

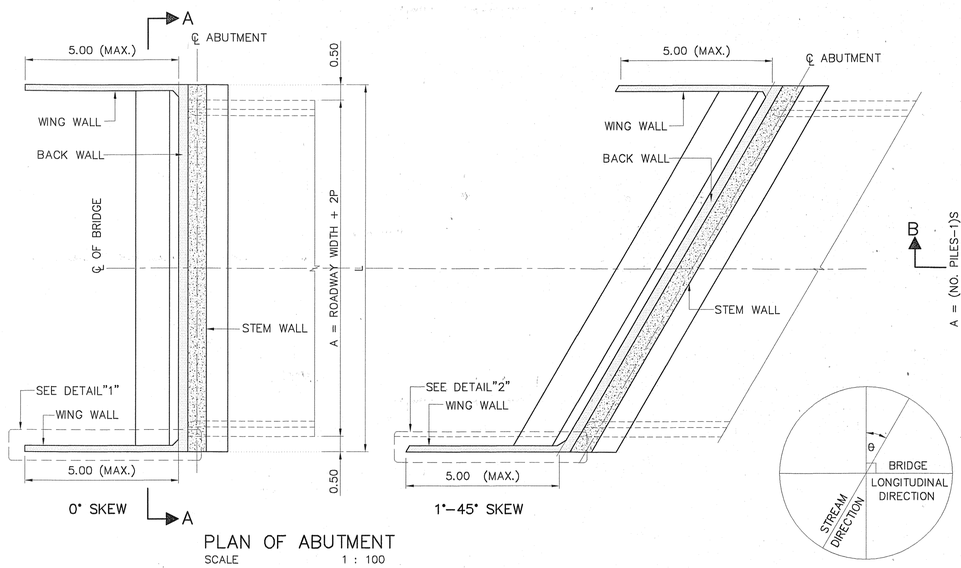

PLAN OF ABUTMENT
SCALE 1 : 100

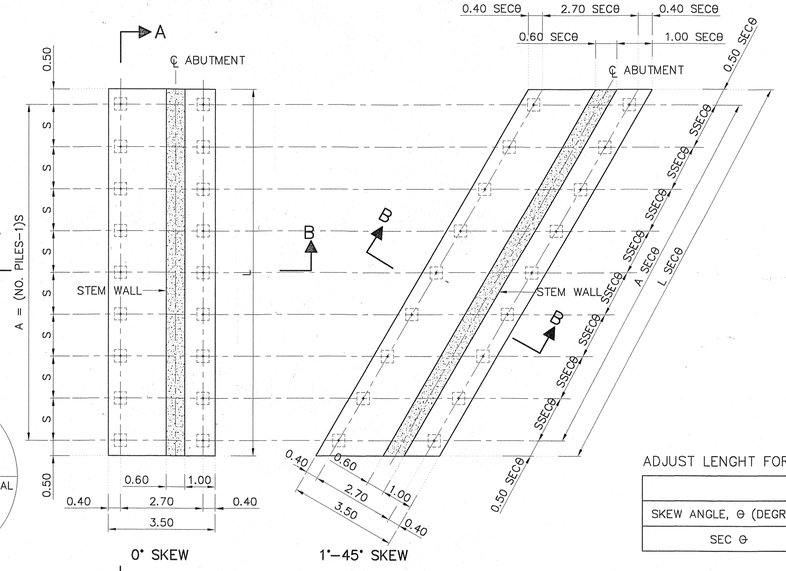

PLAN OF FOOTING
SCALE 1 : 100

ROADWAY WIDTH (M.)	P	FOOTING DIMENSION A	FOOTING DIMENSION L	NO. OF PILE/ROW	PILE SPACING,S (MAX.)	TOTAL PILES
9.00	0.00	9.00	10.00	6	1.80	12
	0.50	10.00	11.00	6	2.00	12
	1.00	11.00	12.00	7	1.83	14
10.00	0.00	10.00	11.00	6	2.00	12
	0.50	11.00	12.00	7	1.83	14
	1.00	12.00	13.00	7	2.00	14
11.00	0.00	11.00	12.00	7	1.83	14
	0.50	12.00	13.00	7	2.00	14
	1.00	13.00	14.00	8	1.86	16
12.00	0.00	12.00	13.00	7	2.00	14
	0.50	13.00	14.00	8	1.86	16
	1.00	14.00	15.00	8	2.00	16
13.00	0.00	13.00	14.00	8	1.86	16
	0.50	14.00	15.00	8	2.00	16
	1.00	15.00	16.00	9	1.88	18
14.00	0.00	14.00	15.00	8	2.00	16
	0.50	15.00	16.00	9	1.88	18
	1.00	16.00	17.00	9	2.00	18
15.00	0.00	15.00	16.00	9	1.88	18
	0.50	16.00	17.00	9	2.00	18
	1.00	17.00	18.00	10	1.89	20

ADJUST LENGHT FOR SKEW BRIDGE

VALUE OF SEC θ IN CASE OF SKEW BRIDGE (SKEW, θ)									
SKEW ANGLE, θ (DEGREE)	0	5	10	15	20	25	30	35	40	45
SEC θ	1.0000	1.0038	1.0154	1.0353	1.0642	1.1034	1.1547	1.2208	1.3054	1.4142

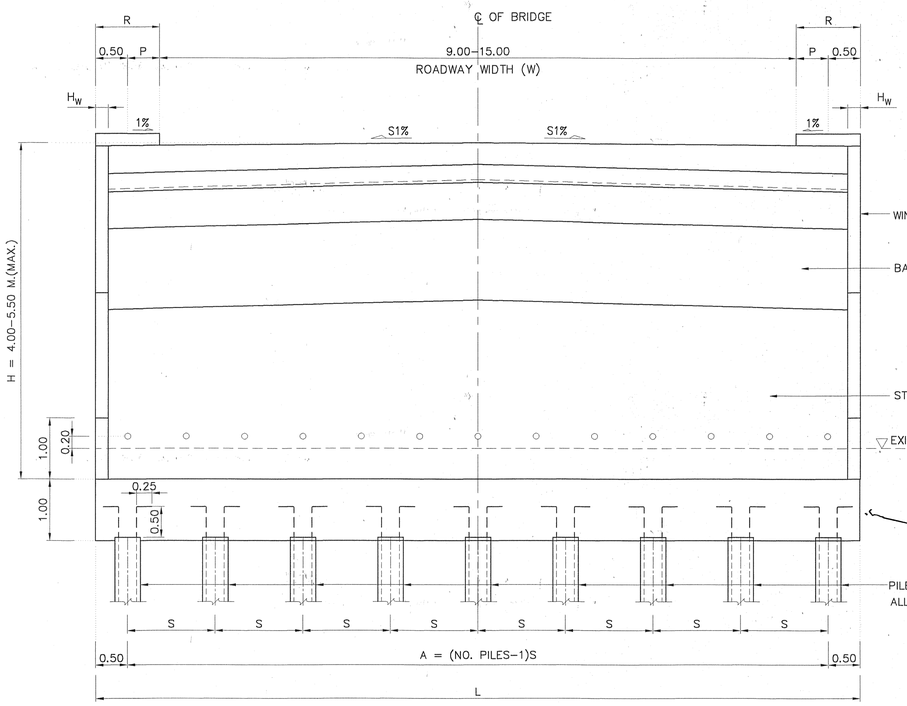

SECTION A – A
SCALE 1 : 50

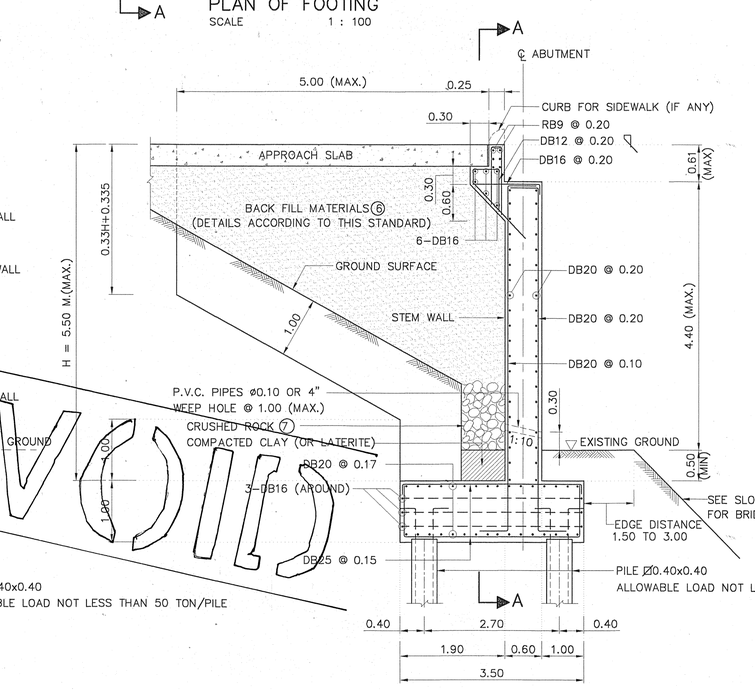

SECTION B – B
NOT TO SCALE

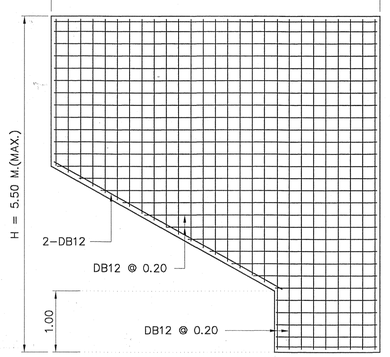

SECTION C – C
SCALE 1 : 50

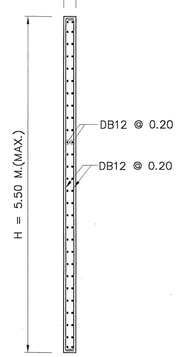

SECTION D – D
SCALE 1 : 50

H (MAX)	H_W
4.00	0.20
5.50	0.25

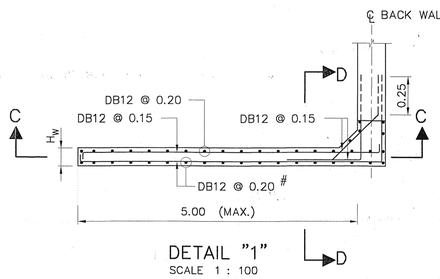

DETAIL "1"
SCALE 1 : 100

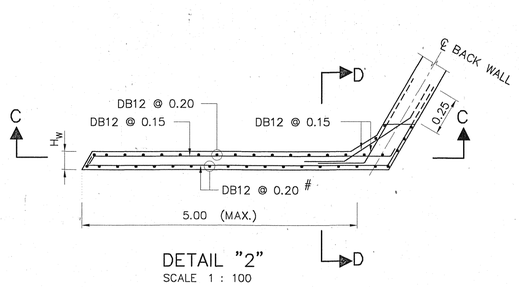

DETAIL "2"
SCALE 1 : 100

NOTES :

1. ALL DIMENSIONS SHOWN ARE IN METERS UNLESS OTHERWISE INDICATED.
2. DESIGN LIVE LOAD : HL–93
3. A MINIMUM ULTIMATE COMPRESSIVE STRENGTH FOR A 150x150x150 MM. CUBE AT 28 DAYS AS FOLLOWS:
   A) FOR ABUTMENT AND WINGWALL 35 MPa. (357 KG/CM^2)
   B) FOR FOOTING 35 MPa. (357 KG/CM^2)
   C) FOR SIDEWALK AND BARRIER 35 MPa. (357 KG/CM^2)
4. REBAR SIZES SMALLER THAN 12 MM. SHALL BE TIS 20 GRADE SR 24 PLAIN ROUND BARS, OTHERS SHALL BE TIS 24 GRADE SD 40 DEFORMED BARS UNLESS OTHERWISE INDICATED.
5. R = 0.50 M. FOR THE BRIDGE WITHOUT SIDEWALK (P = 0.00). FOR THE BRIDGE WITH SIDEWALK OF P = 0.50 AND 1.00, R = 0.50 M. AND 1.00 M., RESPECTIVELY.
6. POROUS BACKFILL AND CRUSHED ROCK SHALL BE SUBMITTED FOR APPROVAL.
7. 1" CRUSHED ROCK OR 1" GRAVEL FILL ALONG THE WALL.

REV.	REVISION	SIGNATURE	DATE
REV.1	REVISION 1/2017		JUN 2017

KINGDOM OF THAILAND

MINISTRY OF TRANSPORT
DEPARTMENT OF HIGHWAYS

STANDARD DRAWING

ABUTMENT 12.00 M.SPAN(MAX), 4.00 M.< HEIGHT ⩽ 5.50 M.

PILE FOOTING DETAILS

DESIGNED : D.O.H. & CONSULTANTS	**CHECKED :** BUREAU OF LOCATION & DESIGN	**DATE :** OCT 2015
SUBMITTED : (DIRECTOR OF LOCATION & DESIGN BUREAU)		**SCALE :** AS SHOWN
APPROVED : (FOR DIRECTOR GENERAL)		**DWG NO.** PB–309
		SHEET NO. 255/RI

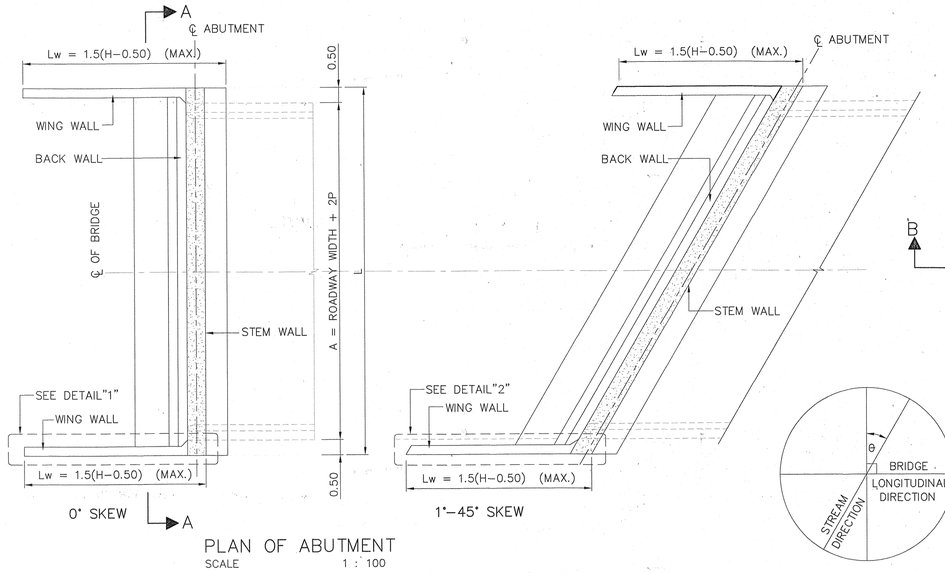

PLAN OF ABUTMENT
SCALE 1 : 100

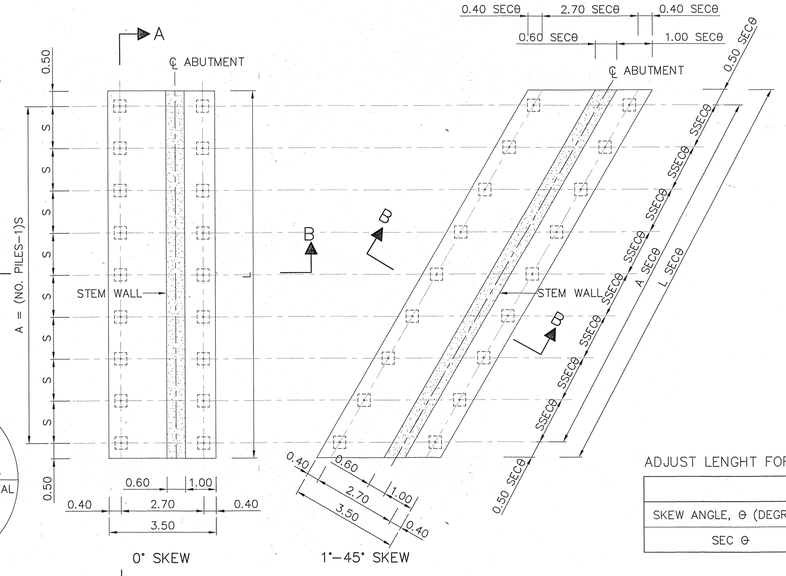

PLAN OF FOOTING
SCALE 1 : 100

ROADWAY WIDTH (M.)	P	FOOTING DIMENSION A	FOOTING DIMENSION L	NO. OF PILE/ROW	PILE SPACING,S (MAX.)	TOTAL PILES
9.00	0.00	9.00	10.00	6	1.80	12
	0.50	10.00	11.00	6	2.00	12
	1.00	11.00	12.00	7	1.83	14
10.00	0.00	10.00	11.00	6	2.00	12
	0.50	11.00	12.00	7	1.83	14
	1.00	12.00	13.00	7	2.00	14
11.00	0.00	11.00	12.00	7	1.83	14
	0.50	12.00	13.00	7	2.00	14
	1.00	13.00	14.00	8	1.86	16
12.00	0.00	12.00	13.00	7	2.00	14
	0.50	13.00	14.00	8	1.86	16
	1.00	14.00	15.00	8	2.00	16
13.00	0.00	13.00	14.00	8	1.86	16
	0.50	14.00	15.00	8	2.00	16
	1.00	15.00	16.00	9	1.88	18
14.00	0.00	14.00	15.00	8	2.00	16
	0.50	15.00	16.00	9	1.88	18
	1.00	16.00	17.00	9	2.00	18
15.00	0.00	15.00	16.00	9	1.88	18
	0.50	16.00	17.00	9	2.00	18
	1.00	17.00	18.00	10	1.89	20

ADJUST LENGHT FOR SKEW BRIDGE

VALUE OF SEC Θ IN CASE OF SKEW BRIDGE (SKEW, Θ)										
SKEW ANGLE, Θ (DEGREE)	0	5	10	15	20	25	30	35	40	45
SEC Θ	1.0000	1.0038	1.0154	1.0353	1.0642	1.1034	1.1547	1.2208	1.3054	1.4142

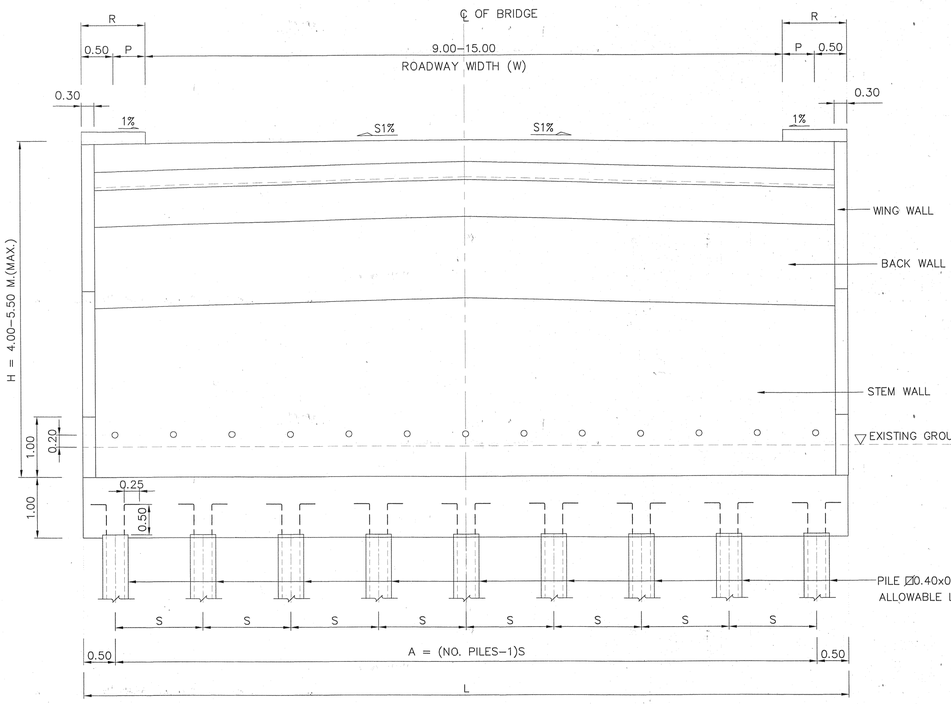

SECTION A − A
SCALE 1 : 50

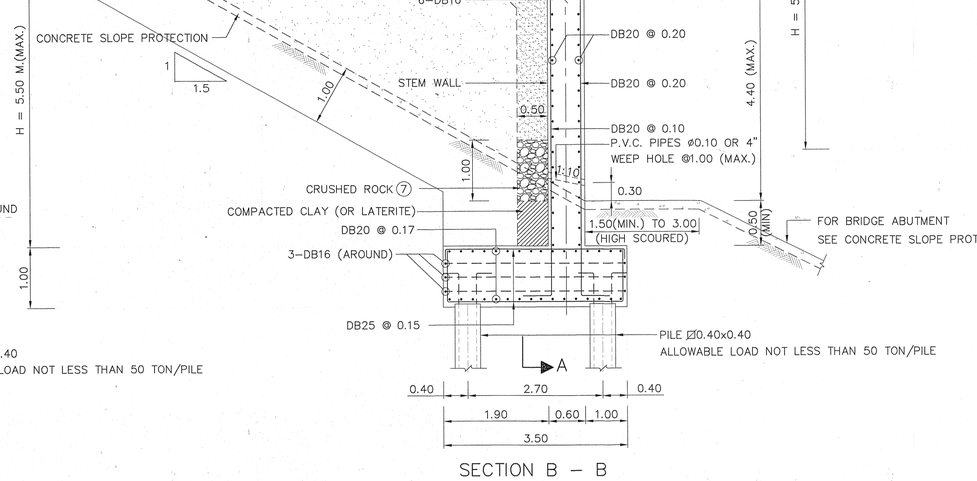

SECTION B − B
NOT TO SCALE

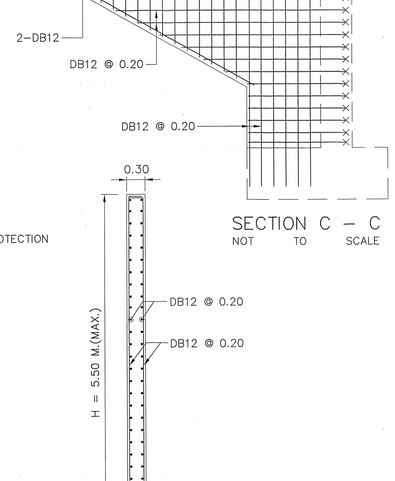

SECTION C − C
NOT TO SCALE

SECTION D − D
NOT TO SCALE

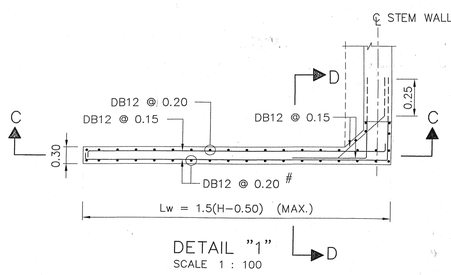

DETAIL "1"
SCALE 1 : 100

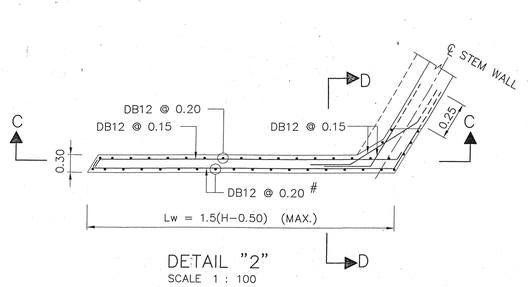

DETAIL "2"
SCALE 1 : 100

NOTES :

1. ALL DIMENSIONS SHOWN ARE IN METERS UNLESS OTHERWISE INDICATED.
2. DESIGN LIVE LOAD : HL−93
3. A MINIMUM ULTIMATE COMPRESSIVE STRENGTH FOR A 150x150x150 MM. CUBE AT 28 DAYS AS FOLLOWS:
   - A) FOR ABUTMENT AND WINGWALL 35 MPa. (357 KG/CM^2)
   - B) FOR FOOTING 35 MPa. (357 KG/CM^2)
   - C) FOR SIDEWALK AND BARRIER 35 MPa. (357 KG/CM^2)
4. REBAR SIZES SMALLER THAN 12 MM. SHALL BE TIS 20 GRADE SR 24 PLAIN ROUND BARS, OTHERS SHALL BE TIS 24 GRADE SD 40 DEFORMED BARS UNLESS OTHERWISE INDICATED.
5. R = 0.50 M. FOR THE BRIDGE WITHOUT SIDEWALK (P = 0.00). FOR THE BRIDGE WITH SIDEWALK OF P = 0.50 AND 1.00, R = 0.50 M. AND 1.00 M., RESPECTIVELY.

⑥ POROUS BACKFILL AND CRUSHED ROCK SHALL BE SUBMITTED FOR APPROVAL.
⑦ 1" CRUSHED ROCK OR 1" GRAVEL FILL ALONG THE WALL.

REV.	REVISION	SIGNATURE	DATE
REV.2	REVISION 2/2019		DEC 2019
REV.1	REVISION 1/2017		JUN 2017

KINGDOM OF THAILAND
MINISTRY OF TRANSPORT
DEPARTMENT OF HIGHWAYS

STANDARD DRAWING

ABUTMENT 12.00 M.SPAN(MAX), 4.00 M.< HEIGHT ≤ 5.50 M.
PILE FOOTING DETAILS

DESIGNED : D.O.H. & CONSULTANTS **CHECKED :** BUREAU OF LOCATION & DESIGN **DATE :** OCT 2015

SUBMITTED : (DIRECTOR OF LOCATION & DESIGN BUREAU) **SCALE :** AS SHOWN

APPROVED : (FOR DIRECTOR GENERAL) **DWG NO.** PB−309

SHEET NO. 255/R2

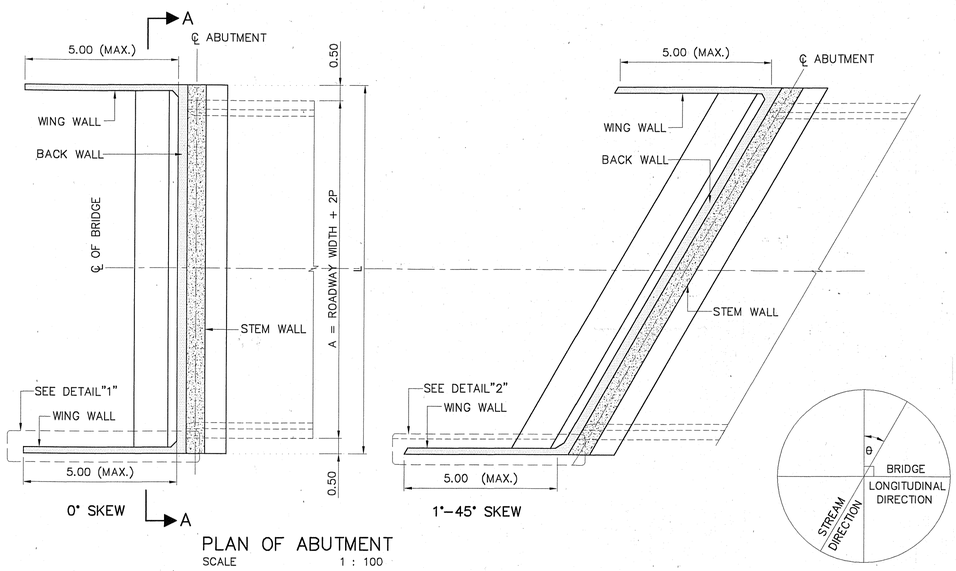

PLAN OF ABUTMENT
SCALE 1 : 100

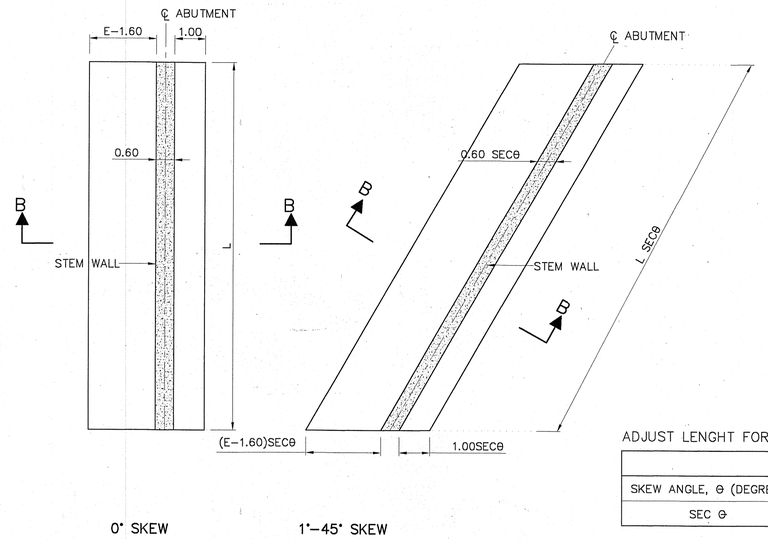

PLAN OF FOOTING
SCALE 1 : 100

ROADWAY WIDTH (M.)	FOOTING DIMENSION (L)		
	P=0.00	P=0.5	P=1.00
9.00	10.00	11.00	12.00
10.00	11.00	12.00	13.00
11.00	12.00	13.00	14.00
12.00	13.00	14.00	15.00
13.00	14.00	15.00	16.00
14.00	15.00	16.00	17.00
15.00	16.00	17.00	18.00

ADJUST LENGHT FOR SKEW BRIDGE

VALUE OF SEC θ IN CASE OF SKEW BRIDGE (SKEW, θ)									
SKEW ANGLE, θ (DEGREE)	0	5	10	15	20	25	30	35	40	45
SEC θ	1.0000	1.0038	1.0154	1.0353	1.0642	1.1034	1.1547	1.2208	1.3054	1.4142

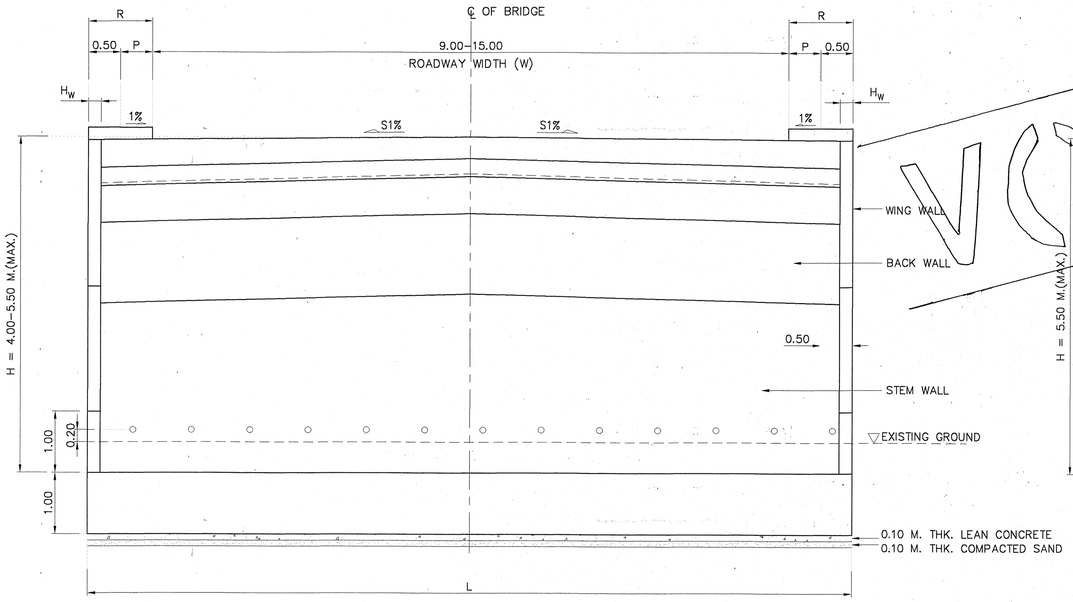

SECTION A – A
SCALE 1 : 50

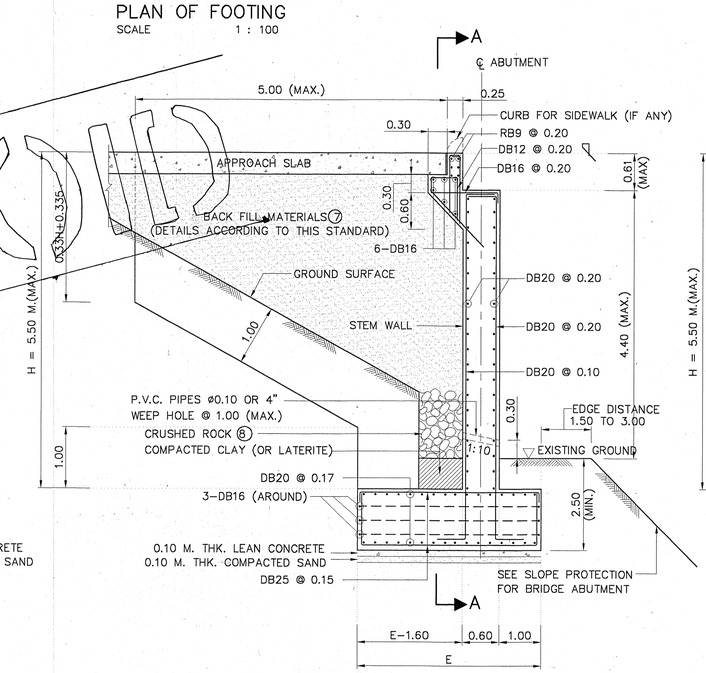

SECTION B – B
NOT TO SCALE

SECTION C – C
SCALE 1 : 50

SECTION D – D
SCALE 1 : 50

H (MAX)	H_w	E
4.00	0.20	3.50
5.50	0.25	4.00

DETAIL "1"
SCALE 1 : 100

DETAIL "2"
SCALE 1 : 100

NOTES :

1. ALL DIMENSIONS SHOWN ARE IN METERS UNLESS OTHERWISE INDICATED.
2. DESIGN LIVE LOAD : HL-93
3. A MINIMUM ULTIMATE COMPRESSIVE STRENGTH FOR A 150x150x150 MM. CUBE AT 28 DAYS AS FOLLOWS:
   - A) FOR ABUTMENT AND WINGWALL 35 MPa. (357 KG/CM^2)
   - B) FOR FOOTING 35 MPa. (357 KG/CM^2)
   - C) FOR SIDEWALK AND BARRIER 35 MPa. (357 KG/CM^2)
4. REBAR SIZES SMALLER THAN 12 MM. SHALL BE TIS 20 GRADE SR 24 PLAIN ROUND BARS, OTHERS SHALL BE TIS 24 GRADE SD 40 DEFORMED BARS UNLESS OTHERWISE INDICATED.
5. R = 0.50 M. FOR THE BRIDGE WITHOUT SIDEWALK (P = 0.00). FOR THE BRIDGE WITH SIDEWALK OF P = 0.50 AND 1.00, R = 0.50 M. AND 1.00 M., RESPECTIVELY.
6. EACH SPREAD FOOTING SHALL BE LOCATED BELOW TO A DEPTH WHERE SCOUR WILL NOT AFFECT CAPACITY, THE MINIMUM ALLOWABLE BEARING CAPACITY OF 0.30 MPa (30 TON/M^2)
7. POROUS BACKFILL AND CRUSHED ROCK MATERIALS SHALL BE SUBMITTED FOR APPROVAL
8. 1" CRUSHED ROCK OR 1" GRAVEL FILL ALONG THE WALL.

REV.	REVISION	SIGNATURE	DATE
REV.1	REVISION 1/2017		JUN 2017

KINGDOM OF THAILAND
MINISTRY OF TRANSPORT
DEPARTMENT OF HIGHWAYS

STANDARD DRAWING

ABUTMENT 12.00 M. SPAN(MAX), 4.00 M.< HEIGHT < 5.50 M.

SPREAD FOOTING DETAILS

DESIGNED : D.O.H. & CONSULTANTS	**CHECKED :** BUREAU OF LOCATION & DESIGN	**DATE :** OCT 2015
SUBMITTED : (DIRECTOR OF LOCATION & DESIGN BUREAU)		**SCALE :** AS SHOWN
APPROVED : (FOR DIRECTOR GENERAL)		**DWG NO.** PB-310
		SHEET NO. 256/R1

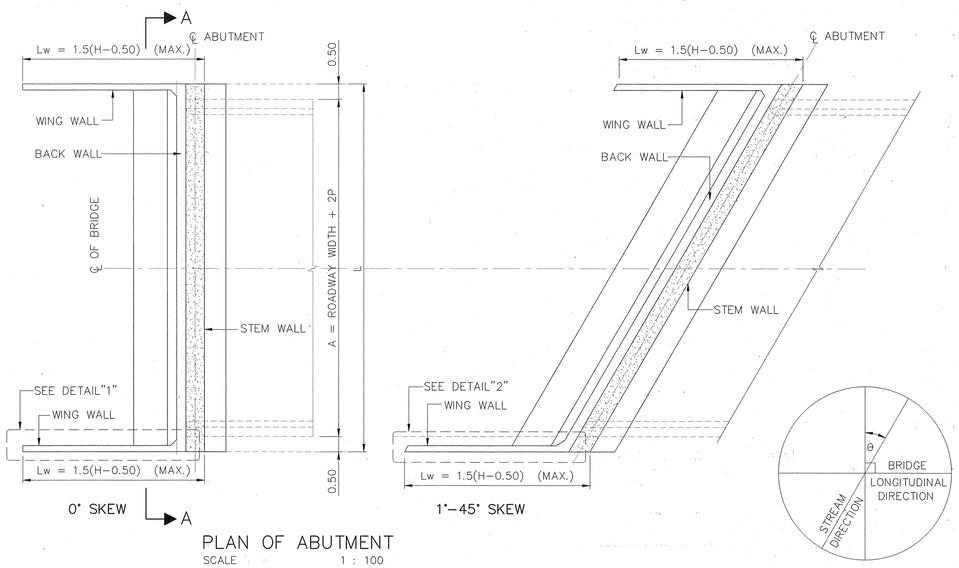

PLAN OF ABUTMENT

SCALE 1 : 100

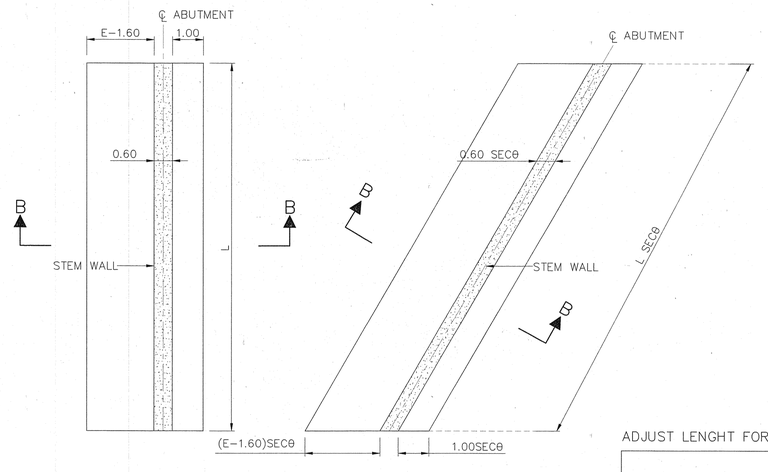

ROADWAY WIDTH (M.)	FOOTING DIMENSION (L)		
	P=0.00	P=0.5	P=1.00
9.00	10.00	11.00	12.00
10.00	11.00	12.00	13.00
11.00	12.00	13.00	14.00
12.00	13.00	14.00	15.00
13.00	14.00	15.00	16.00
14.00	15.00	16.00	17.00
15.00	16.00	17.00	18.00

ADJUST LENGHT FOR SKEW BRIDGE

VALUE OF SEC θ IN CASE OF SKEW BRIDGE (SKEW, θ)										
SKEW ANGLE, θ (DEGREE)	0	5	10	15	20	25	30	35	40	45
SEC θ	1.0000	1.0038	1.0154	1.0353	1.0642	1.1034	1.1547	1.2208	1.3054	1.4142

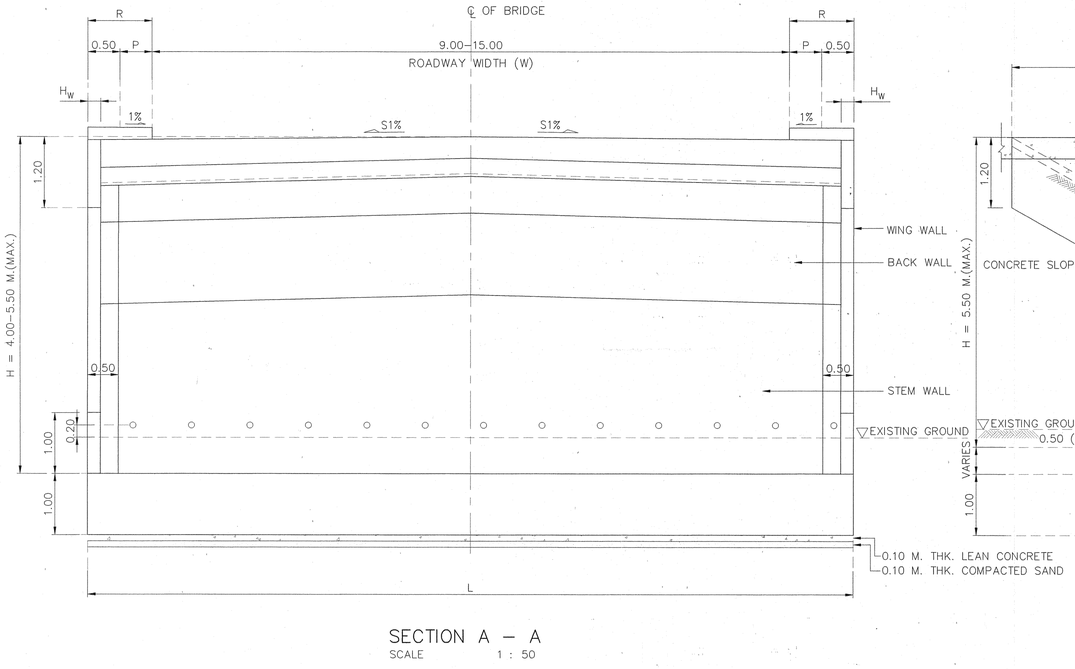

SECTION A − A

SCALE 1 : 50

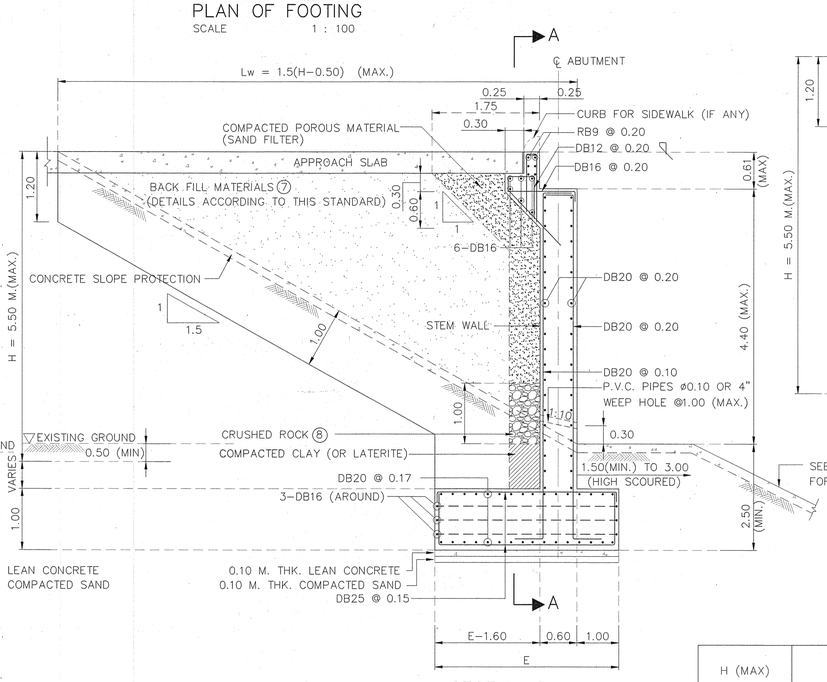

PLAN OF FOOTING

SCALE 1 : 100

SECTION B − B

NOT TO SCALE

H (MAX)	H_W	E
4.00	0.30	3.50
5.50	0.30	4.00

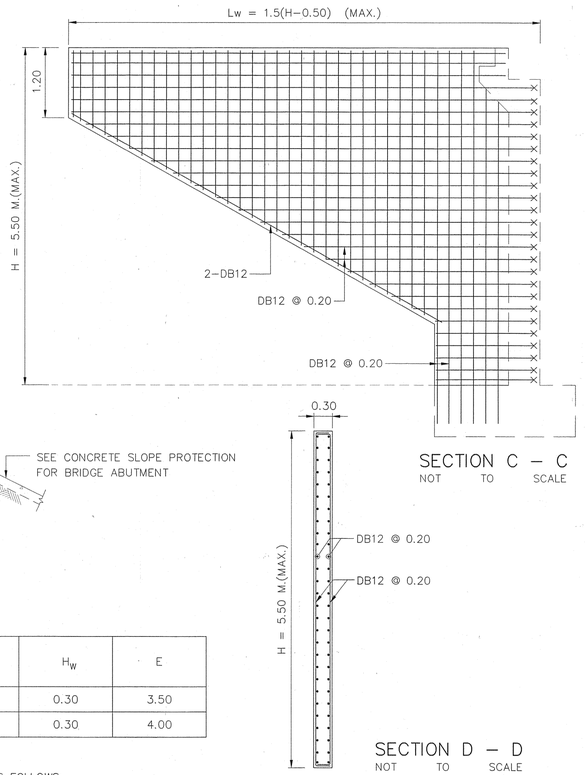

SECTION C − C

NOT TO SCALE

SECTION D − D

NOT TO SCALE

NOTES :

1. ALL DIMENSIONS SHOWN ARE IN METERS UNLESS OTHERWISE INDICATED.
2. DESIGN LIVE LOAD : HL−93
3. A MINIMUM ULTIMATE COMPRESSIVE STRENGTH FOR A 150x150x150 MM. CUBE AT 28 DAYS AS FOLLOWS:
   - A) FOR ABUTMENT AND WINGWALL 35 MPa. (357 KG/CM^2)
   - B) FOR FOOTING 35 MPa. (357 KG/CM^2)
   - C) FOR SIDEWALK AND BARRIER 35 MPa. (357 KG/CM^2)
4. REBAR SIZES SMALLER THAN 12 MM. SHALL BE TIS 20 GRADE SR 24 PLAIN ROUND BARS, OTHERS SHALL BE TIS 24 GRADE SD 40 DEFORMED BARS UNLESS OTHERWISE INDICATED.
5. R = 0.50 M. FOR THE BRIDGE WITHOUT SIDEWALK (P = 0.00). FOR THE BRIDGE WITH SIDEWALK OF P = 0.50 AND 1.00, R = 0.50 M. AND 1.00 M., RESPECTIVELY.
6. EACH SPREAD FOOTING SHALL BE LOCATED BELOW TO A DEPTH WHERE SCOUR WILL NOT AFFECT CAPACITY, THE MINIMUM ALLOWABLE BEARING CAPACITY OF 0.30 MPa (30 TON/M^2)
7. POROUS BACKFILL AND CRUSHED ROCK MATERIALS SHALL BE SUBMITTED FOR APPROVAL
8. 1" CRUSHED ROCK OR 1" GRAVEL FILL ALONG THE WALL.

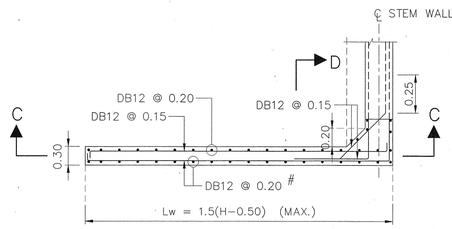

DETAIL "1"

SCALE 1 : 100

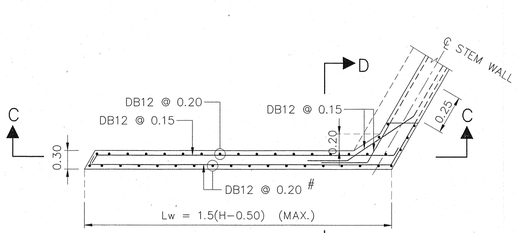

DETAIL "2"

SCALE 1 : 100

REV.	REVISION	SIGNATURE	DATE
REV.2	REVISION 2/2021		JAN 2021
REV.1	REVISION 1/2017		JUN 2017

KINGDOM OF THAILAND

MINISTRY OF TRANSPORT

DEPARTMENT OF HIGHWAYS

STANDARD DRAWING

ABUTMENT 12.00 M. SPAN(MAX), 4.00 M.< HEIGHT ≤ 5.50 M.

SPREAD FOOTING DETAILS

DESIGNED : D.O.H. & CONSULTANTS **CHECKED :** BUREAU OF LOCATION & DESIGN **DATE :** OCT 2015

SUBMITTED : (DIRECTOR OF LOCATION & DESIGN BUREAU) **SCALE :** AS SHOWN

APPROVED : (FOR DIRECTOR GENERAL) **DWG NO.** PB−310

SHEET NO. 256/R2

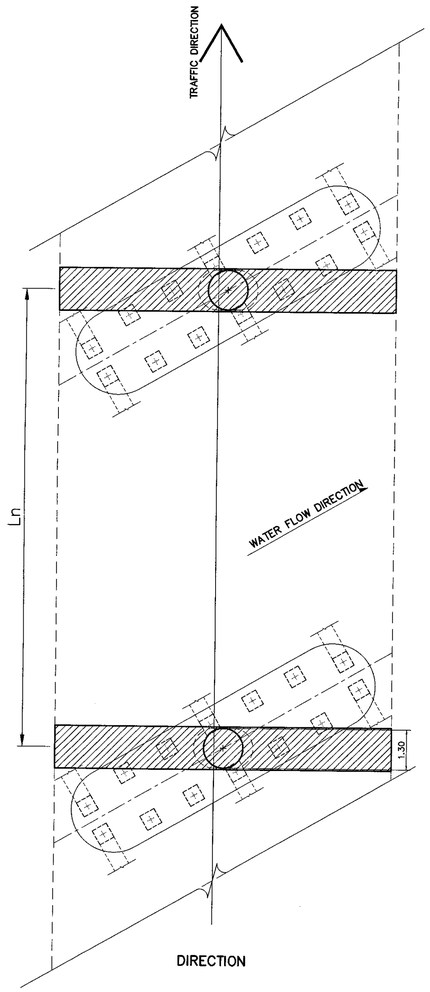

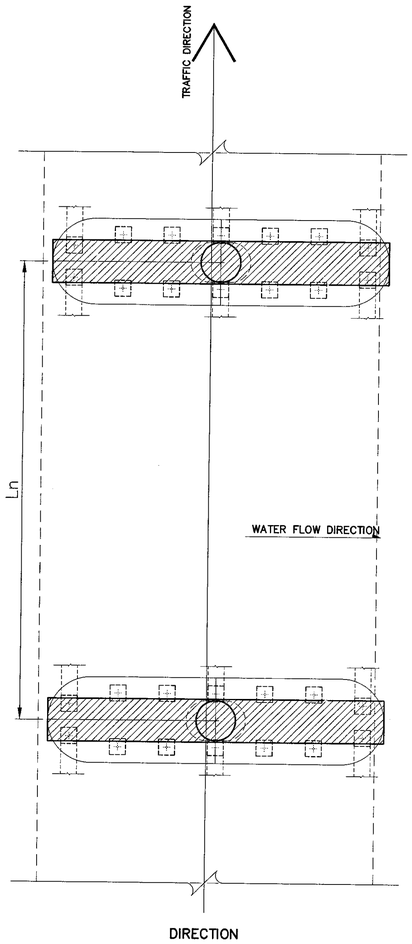

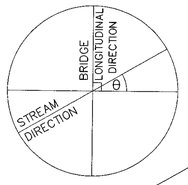

SKEW FOOTING PLAN F18 FOR SINGLE COLUMN
FOR DRAWING NO. PC–202,PC–211

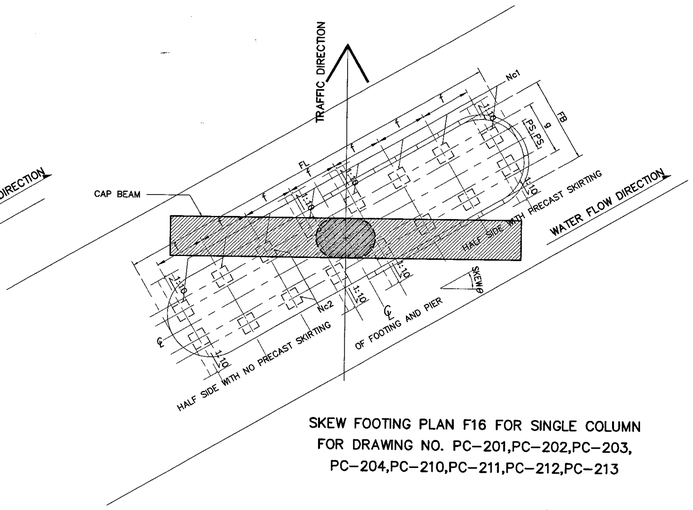

SKEW FOOTING PLAN F16 FOR SINGLE COLUMN
FOR DRAWING NO. PC–201,PC–202,PC–203,
PC–204,PC–210,PC–211,PC–212,PC–213

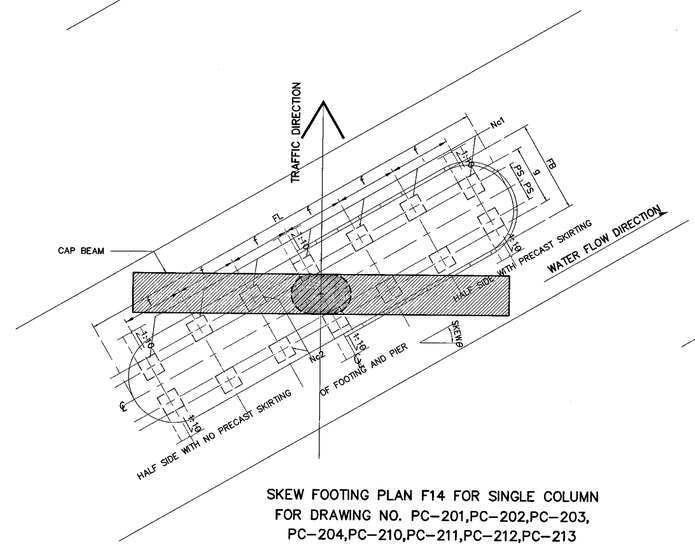

SKEW FOOTING PLAN F14 FOR SINGLE COLUMN
FOR DRAWING NO. PC–201,PC–202,PC–203,
PC–204,PC–210,PC–211,PC–212,PC–213

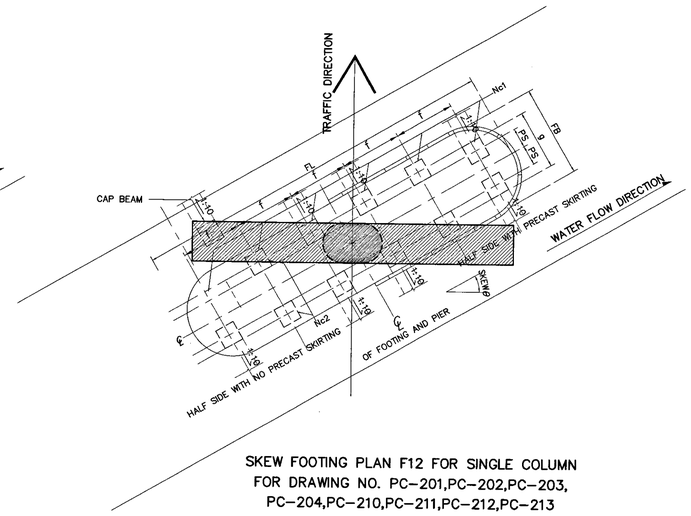

SKEW FOOTING PLAN F12 FOR SINGLE COLUMN
FOR DRAWING NO. PC–201,PC–202,PC–203,
PC–204,PC–210,PC–211,PC–212,PC–213

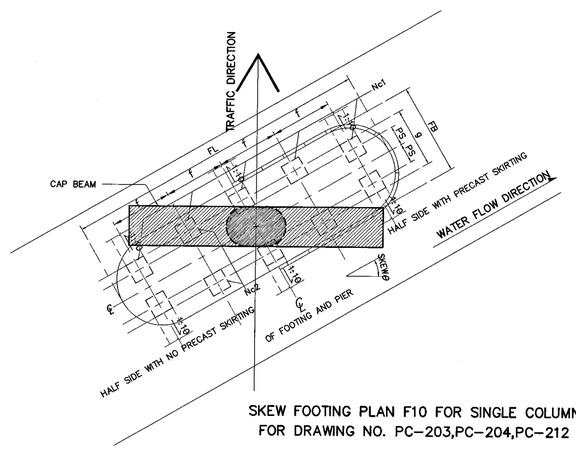

SKEW FOOTING PLAN F10 FOR SINGLE COLUMN
FOR DRAWING NO. PC–203,PC–204,PC–212

NOTE :

1. THE DESIGN LOAD IN THIS DRAWING USE VEHICLE LOAD HL–93 BASE ON AASHTO (LRFD).
2. THE FORMATION OF PILE ARANGEMENT FOR SINGLE COLUMN PIER FOUNDATION THAT DOES NOT SHOW IN DRAWING NO.PC–201 TO PC–228 SHALL BE USED IN THIS DRAWING.
3. FOR SINGLE COLUMN PIER SKEWED BRIDGES, COLUMN AND CAPBEAM SHALL NOT BE SKEWED. ONLY FOOTING WILL BE SKEWED AS SHOWN IN THIS DRAWING.
4. FOR BATTER PILE DRIVING, 1:10 RATIO OF HORIZONTAL VERSUS VERTICAL SHALL BE USED. FREE STANDING LENGTH OF PILE SHALL NOT BE OVER 5.00 METERS.

REF.	REVISION	SIGNATURE	DATE

KINGDOM OF THAILAND

MINISTRY OF TRANSPORT

DEPARTMENT OF HIGHWAYS

STANDARD DRAWING

TYPICAL DETAILS FOR PIER AND FOOTING
SKEW FOOTING FOR SINGLE COLUMN PIER

DESIGNED : D.O.H. & CONSULTANTS	CHECKED : BUREAU OF LOCATION & DESIGN	DATE : OCT 2015
SUBMITTED : (DIRECTOR OF LOCATION & DESIGN BUREAU)		SCALE : AS SHOWN
APPROVED : (FOR DIRECTOR GENERAL)		DWG NO. PC–101
		SHEET NO. 257

D:\std dwg 2015\PC-101(REV00)

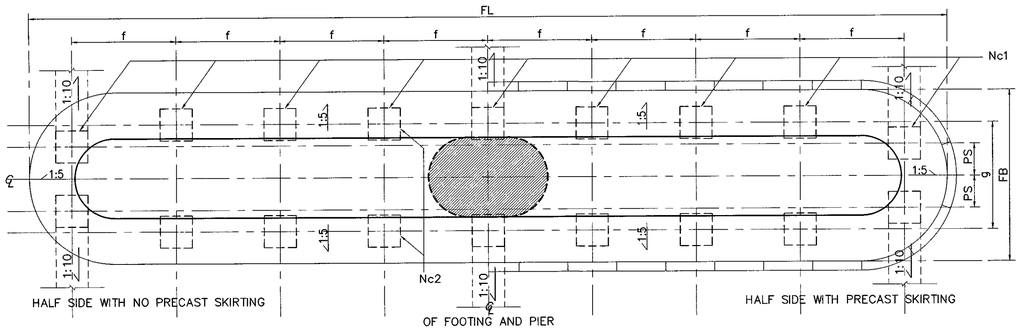

FOOTING PLAN F18 FOR SINGLE COLUMN
FOR DRAWING NO. PC–202,PC–211

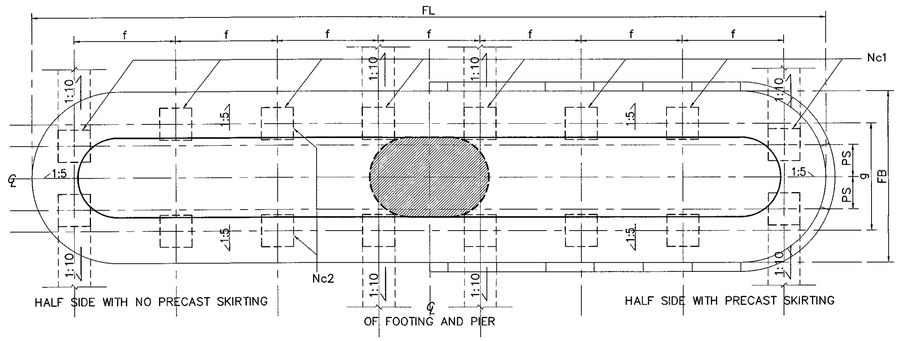

FOOTING PLAN F16 FOR SINGLE COLUMN
FOR DRAWING NO. PC–201,PC–202,PC–203,PC–204,PC–210,PC–211,PC–212,PC–213

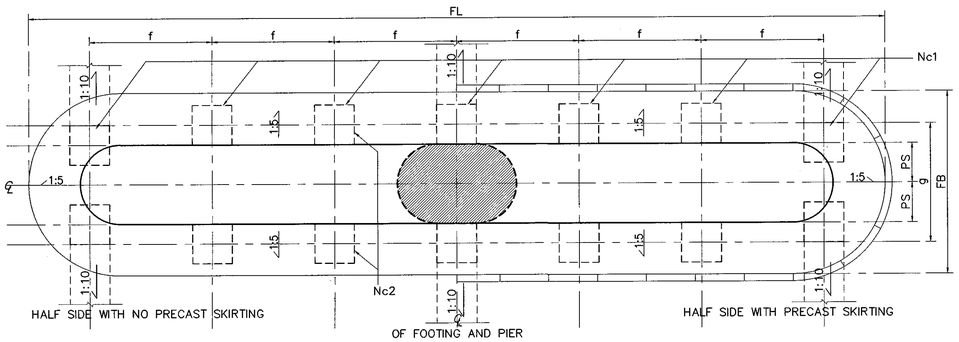

FOOTING PLAN F14 FOR SINGLE COLUMN
FOR DRAWING NO. PC–201,PC–202,PC–203,PC–204,PC–210,PC–211,PC–212,PC–213

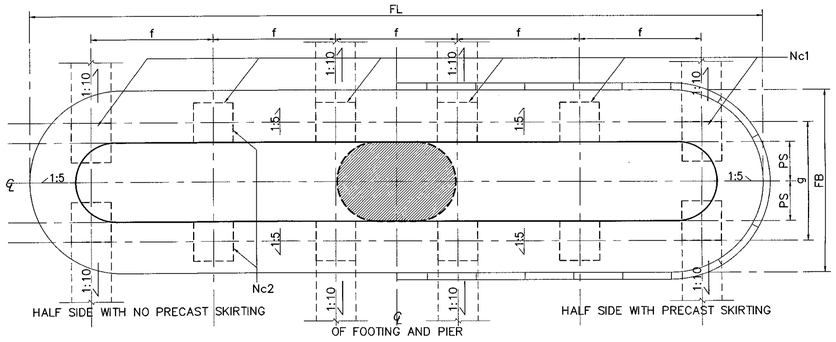

FOOTING PLAN F12 FOR SINGLE COLUMN
FOR DRAWING NO. PC–201,PC–202,PC–203,PC–204,PC–210,PC–211,PC–212,PC–213

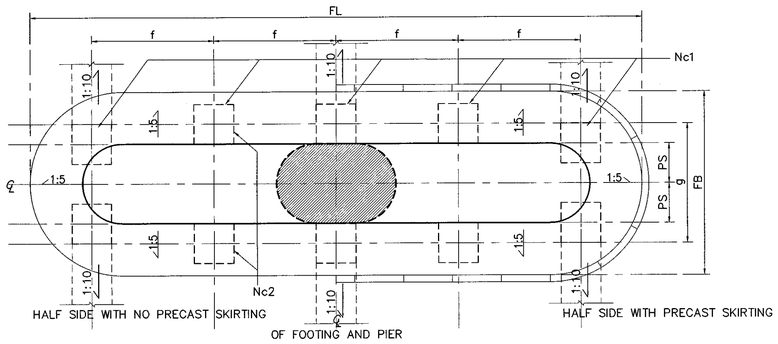

FOOTING PLAN F10 FOR SINGLE COLUMN
FOR DRAWING NO. PC–203,PC–204,PC–212

NOTE :

1. THE DESIGN LOAD IN THIS DRAWING USE VEHICLE LOAD HL–93 BASE ON AASHTO (LRFD).
2. THE FORMATION OF PILE ARANGEMENT FOR TWO COLUMN PIER AND THREE COLUMN PIER FOUNDATION THAT DO NOT SHOW IN DRAWING NO.PC–201 TO PC–228 SHALL BE USED IN THIS DRAWING.
3. FOR BATTER PILE DRIVING, 1:10 RATIO OF HORIZONTAL VERSUS VERTICAL SHALL BE USED. FREE STANDING LENGTH OF PILE SHALL NOT BE OVER 5.00 METERS.

REF.	REVISION	SIGNATURE	DATE

KINGDOM OF THAILAND

MINISTRY OF TRANSPORT
DEPARTMENT OF HIGHWAYS

STANDARD DRAWING

TYPICAL DETAILS FOR PIER AND FOOTING
PILE PATTERN FOR SINGLE COLUMN PIER

DESIGNED : D.O.H. & CONSULTANTS	**CHECKED :** BUREAU OF LOCATION & DESIGN	**DATE :** OCT 2015
SUBMITTED : (DIRECTOR OF LOCATION & DESIGN BUREAU)		**SCALE :** AS SHOWN
APPROVED : (FOR DIRECTOR GENERAL)		**DWG NO.** PC–102
		SHEET NO. 258

D:\std dwg 2015\PC–102(REV00)

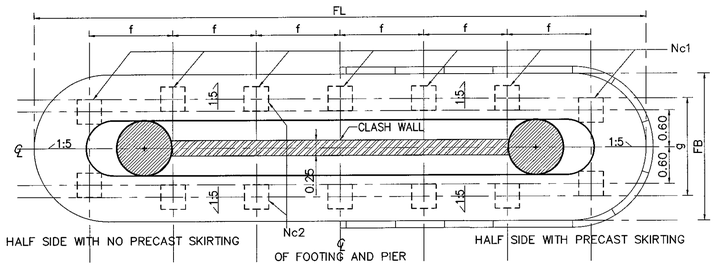

FOOTING PLAN F14 FOR TWO COLUMNS PIER
FOR DRAWING NO. PC–205,PC–206,PC–207,PC–214,PC–215

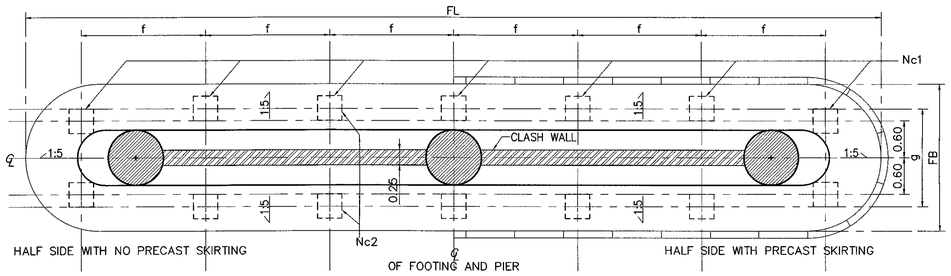

FOOTING PLAN F14 FOR THREE COLUMNS PIER
FOR DRAWING NO. PC–207,PC–208,PC–216,PC–217

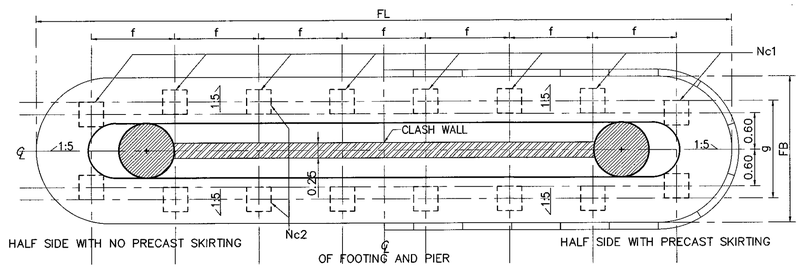

FOOTING PLAN F16 FOR TWO COLUMNS PIER
FOR DRAWING NO. PC–205,PC–206,PC–207,PC–214,PC–215

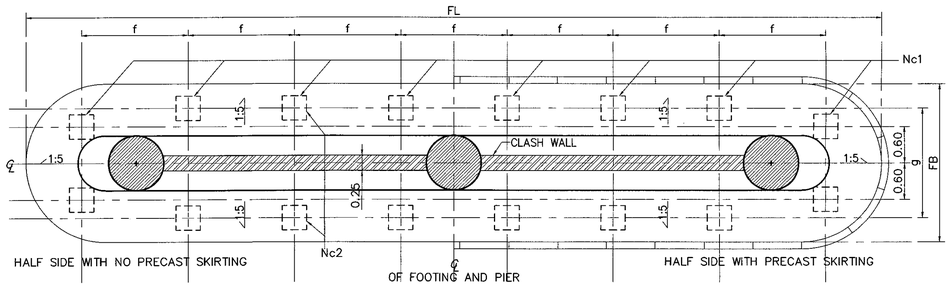

FOOTING PLAN F16 FOR THREE COLUMNS PIER
FOR DRAWING NO. PC–207,PC–208,PC–216,PC–217

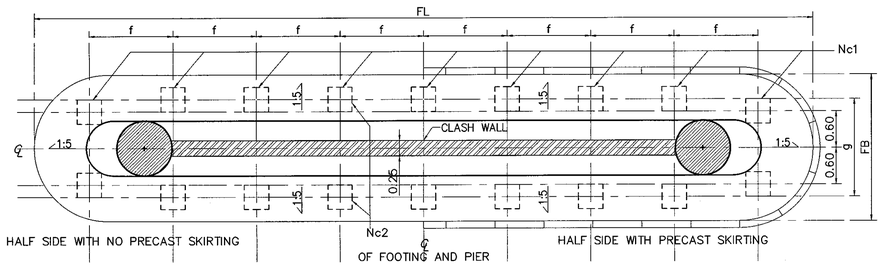

FOOTING PLAN F18 FOR TWO COLUMNS PIER
FOR DRAWING NO. PC–206,PC–215

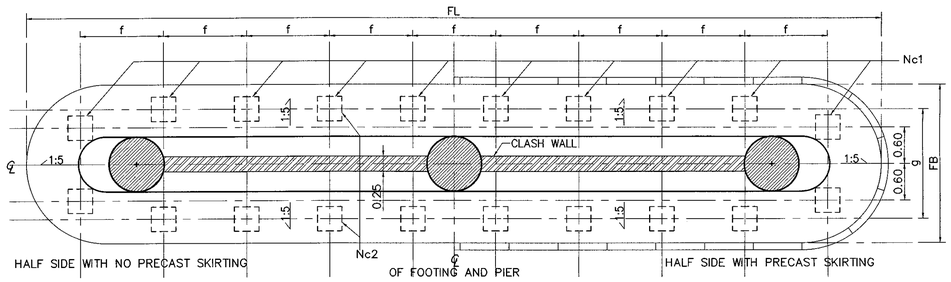

FOOTING PLAN F20 FOR THREE COLUMNS PIER
FOR DRAWING NO. PC–208,PC–215

NOTE :

1. THE DESIGN LOAD IN THIS DRAWING USE VEHICLE LOAD HL–93 BASE ON AASHTO (LRFD).
2. THE FORMATION OF PILE ARANGEMENT FOR TWO COLUMN PIER AND THREE COLUMN PIER FOUNDATION THAT DO NOT SHOW IN DRAWING NO.PC–201 TO PC–228 SHALL BE USED IN THIS DRAWING.
3. FOR BATTER PILE DRIVING, 1:10 RATIO OF HORIZONTAL VERSUS VERTICAL SHALL BE USED. FREE STANDING LENGTH OF PILE SHALL NOT BE OVER 5.00 METERS.

KINGDOM OF THAILAND

MINISTRY OF TRANSPORT
DEPARTMENT OF HIGHWAYS

STANDARD DRAWING

TYPICAL DETAILS FOR PIER AND FOOTING
PILE PATTERN FOR MULTI COLUMN PIERS

DESIGNED : D.O.H. & CONSULTANTS	**CHECKED :** BUREAU OF LOCATION & DESIGN		**DATE :** OCT 2015
SUBMITTED : (DIRECTOR OF LOCATION & DESIGN BUREAU)			**SCALE :** AS SHOWN
APPROVED : (FOR DIRECTOR GENERAL)			**DWG NO.** PC–103
			SHEET NO. 259

REF.	REVISION	SIGNATURE	DATE

D:\std dwg 2015\PC-103(REV00)

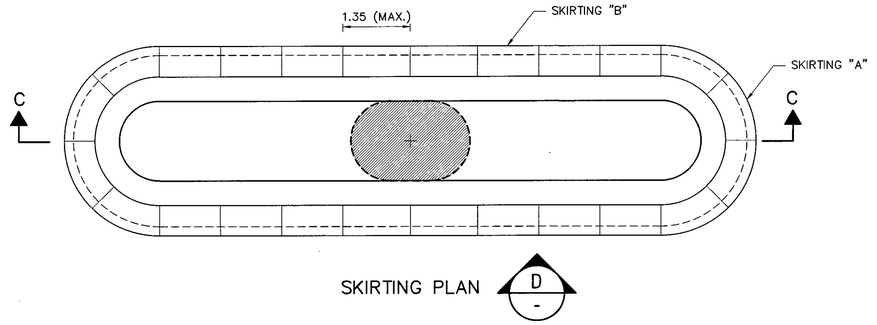

SKIRTING PLAN

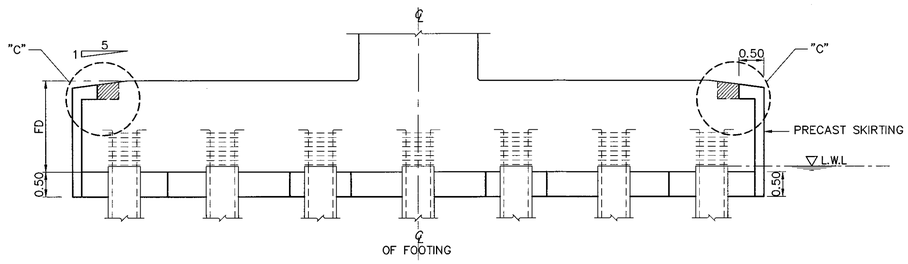

SECTION C–C

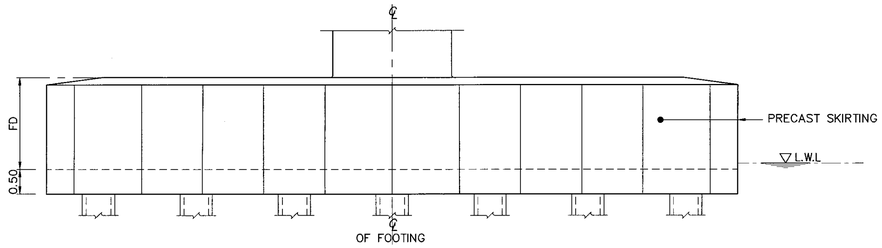

ELEVATION D–D

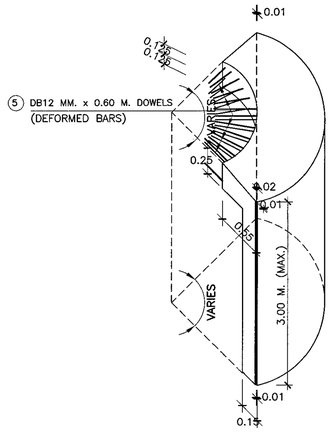

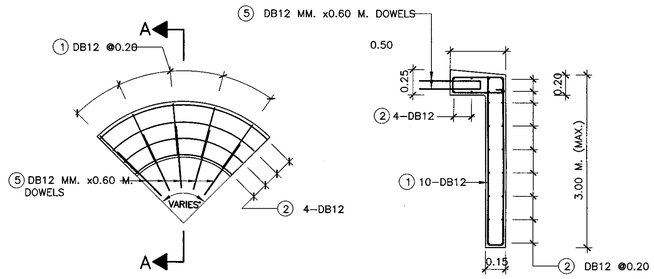

SECTION A–A
SCALE N.T.S.

PRECAST SKIRTING "A" REINFORCEMENT
SCALE N.T.S.

PRECAST SKIRTING "A" DETAILS
SCALE N.T.S.

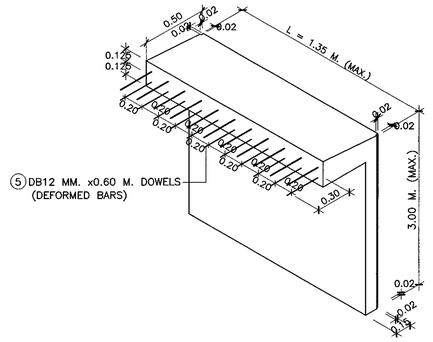

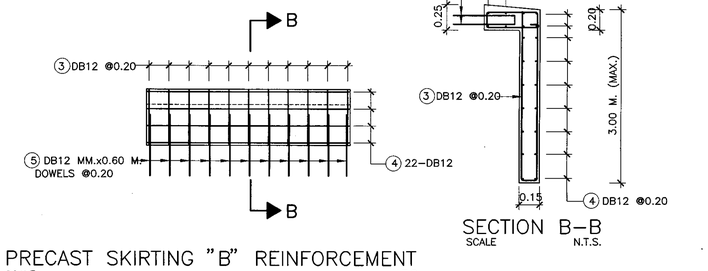

SECTION B–B
SCALE N.T.S.

PRECAST SKIRTING "B" REINFORCEMENT
SCALE N.T.S.

PRECAST SKIRTING "B" DETAILS
SCALE N.T.S.

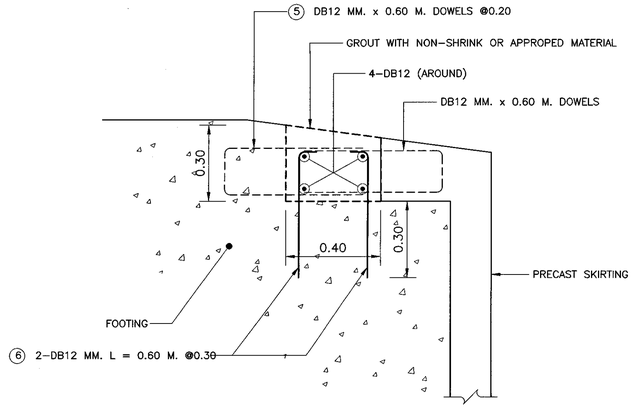

JOINT DETAILS "C"
SCALE N.T.S.

BAR MARK	NO.	BAR BENDING DIAGRAMS (M.)
1	DB12	
2	DB12	
3	DB12	
4	DB12	
5	DB12	
6	DB12	

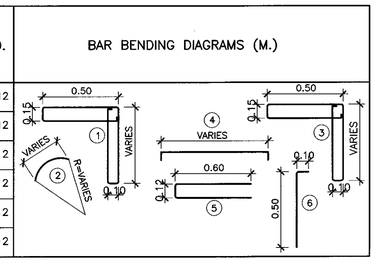

REMARKS :

1. LENGTH AND AMOUNT OF REINFORCEMENT SHOWN IN THE TABLE MAY VARY ACCORDING TO FOOTING SHAPE BUT SPACING SHALL BE AS SHOWN ON THE DWGS.
2. THE PRECAST SKIRTING "A" SHALL BE OBTAINED BY DIVIDING THE SEMICIRCULAR INTO EQUAL 4 SECTORS MAY VARY ACCORDING TO FOOTING SHAPE , THE PRECAST SKIRTING "B" SHALL BE OBTAINED BY DIVIDING THE STRAIGHT PORTION INTO EQUAL LENGTHS. THESE LENGTH SHALL BE AS LONG AS POSSIBLE BUT NOT MORE THAN 1.35 M.
3. L.W.L. = LOWEST WATER LAVEL
4. FOR PIER AMID THE RIVER,PRECAST SKIRTING AROUND THE FOOTING SHALL BE USED.REINFORCEMENTDETAILS FOR PRECAST SKIRTING FOLLOWS DRAWING NO.PC–104. IN THE CASE OF PIER OUTSIDE OF THE RIVER, PRECAST SKIRTING CAN BE NEGLECTED.

REF.	REVISION	SIGNATURE	DATE

KINGDOM OF THAILAND

MINISTRY OF TRANSPORT

DEPARTMENT OF HIGHWAYS

STANDARD DRAWING

TYPICAL DETAILS FOR PIER AND FOOTING
PRECAST SKIRTING

DESIGNED : D.O.H. & CONSULTANTS	**CHECKED :** BUREAU OF LOCATION & DESIGN	**DATE :** OCT 2015
SUBMITTED : (DIRECTOR OF LOCATION & DESIGN BUREAU)		**SCALE :** AS SHOWN
		DWG NO. PC–104
APPROVED : (FOR DIRECTOR GENERAL)		**SHEET NO.** 260

D:\std dwg 2015\PC-104(REV00)

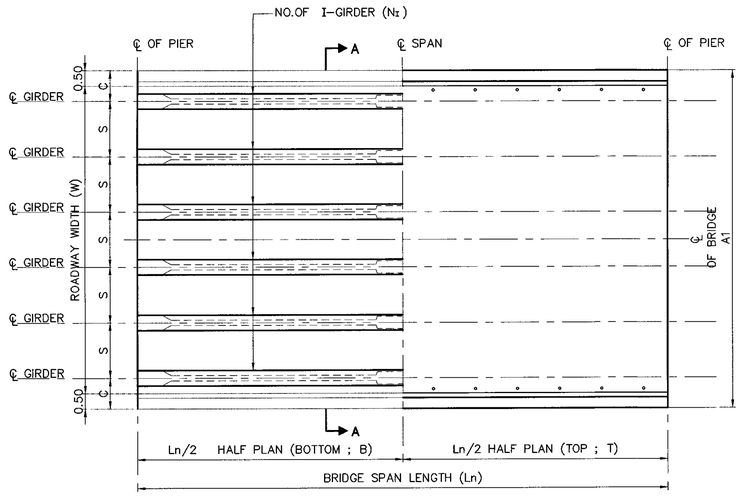

PLAN OF BRIDGE DECK

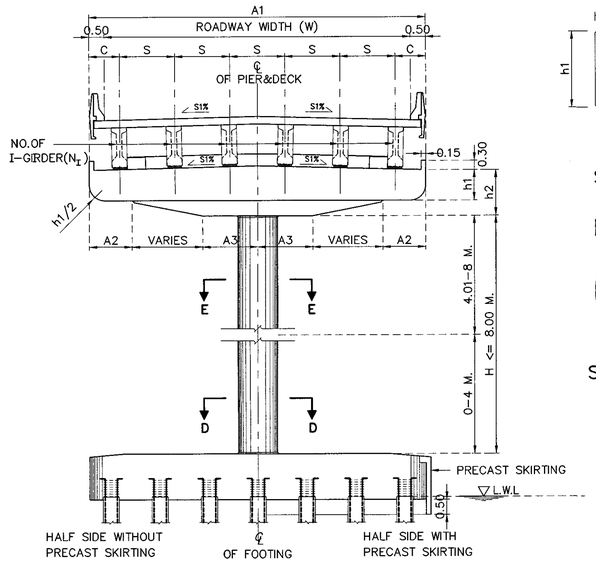

SECTION A-A

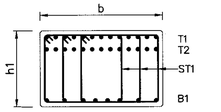

SECTION B-B

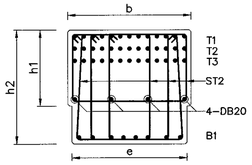

SECTION C-C

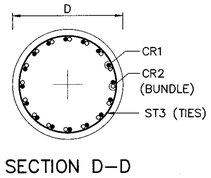

SECTION D-D

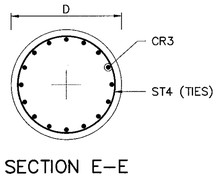

SECTION E-E

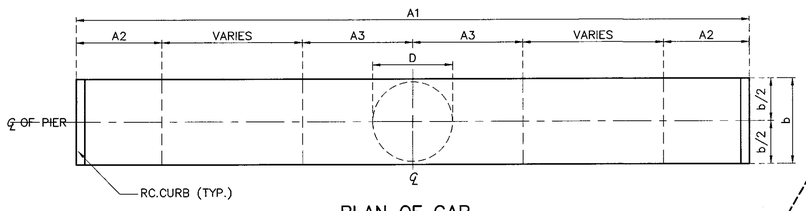

PLAN OF CAP

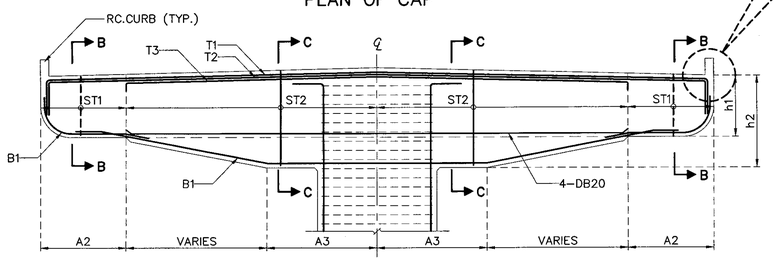

SECTION OF CAP

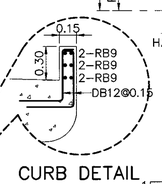

CURB DETAIL

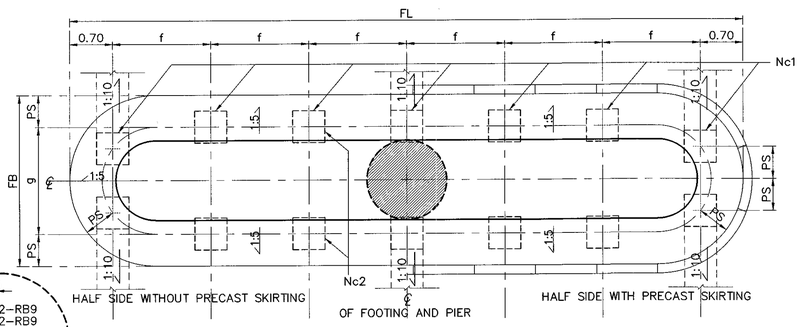

PLAN OF FOOTING

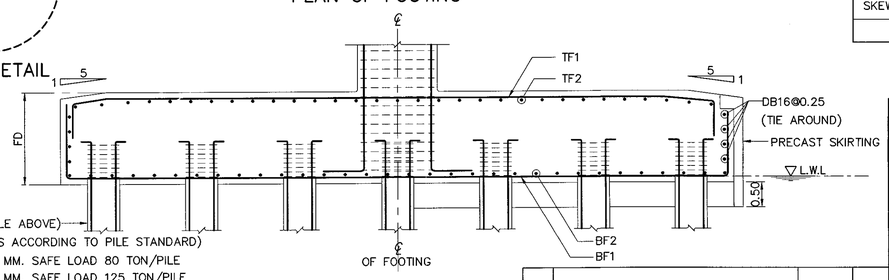

SECTION OF FOOTING

PILE (FROM TABLE ABOVE)
(OTHERS DETAILS ACCORDING TO PILE STANDARD)
PILE Ø525x525 MM. SAFE LOAD 80 TON/PILE
PILE Ø650x650 MM. SAFE LOAD 125 TON/PILE

NOTE :
1. ALL DIMENSIONS SHOWN ARE IN METERS UNLESS OTHERWISE INDICATED
2. LIVE LOADING : VEHICLE LOAD HL-93
3. A MINIMUM ULTIMATE COMPRESSIVE STRENGTH FOR A 150X150X150 MM. CUBE AT 28 DAYS AS FOLLOWS :
   A) FOR COLUMN AND CAP BEAM 35 MPa
   B) FOR FOOTING 35 MPa
4. REBARS SMALLER THAN RB9 MM. SHALL BE TIS 20 GRADE SR 24 PLAIN ROUND BARS, OTHERS SHALL BE TIS 24 GRADE SD40 DEFORMED BARS UNLESS OTHERWISE INDICATED.

1.SPAN LENGTH 15.00 M., HEIGHT ≤ 8.00 M.

Ln (M.)	W (M.)	NO.OF I-GIRDER (Nɪ)	DIMENSION (M.)								C		REBAR COLUMN					
			A1	A2	A3	b	e	S	h1	h2	STRAIGHT	CURVED	D (M.)	CR1	CR2	ST3	CR3	ST4
15.00 M. SEISMIC LEVEL 1	9.00	5	10.00	1.30	1.60	1.60	1.40	2.00	1.00	1.50	1.00	1.00-1.25	1.20	33-DB28	33-DB28	DB12@0.15	33-DB28	DB12@0.30
	10.00	6	11.00	1.40	1.80	1.60	1.45	1.80	1.00	1.50	1.00	1.00-1.25	1.30	32-DB28	32-DB28	DB12@0.15	32-DB28	DB12@0.30
	11.00	6	12.00	1.50	2.00	1.60	1.45	2.00	1.00	1.50	1.00	1.00-1.25	1.30	34-DB28	34-DB28	DB12@0.15	34-DB28	DB12@0.30
	12.00	7	13.00	1.60	2.20	1.60	1.50	1.83	1.00	1.50	1.00	1.00-1.25	1.40	38-DB28	38-DB28	DB12@0.15	38-DB28	DB12@0.30
15.00 M. SEISMIC LEVEL 2	9.00	5	10.00	1.30	1.60	1.60	1.40	2.00	1.00	1.50	1.00	1.00-1.25	1.20	33-DB28	33-DB28	DB12@0.15	33-DB28	DB12@0.30
	10.00	6	11.00	1.40	1.80	1.60	1.45	1.80	1.00	1.50	1.00	1.00-1.25	1.30	32-DB28	32-DB28	DB12@0.15	32-DB28	DB12@0.30
	11.00	6	12.00	1.50	2.00	1.60	1.45	2.00	1.00	1.50	1.00	1.00-1.25	1.30	34-DB28	34-DB28	DB12@0.15	34-DB28	DB12@0.30
	12.00	7	13.00	1.60	2.20	1.60	1.50	1.83	1.00	1.50	1.00	1.00-1.25	1.40	38-DB28	38-DB28	DB12@0.15	38-DB28	DB12@0.30

Ln (M.)	W (M.)	REBAR CAP BEAM						PILE SIZING, PS (MM.)	Nc1	Nc2	NO.OF PILE	FOOTING SKEW 0°-15°					FOOTING SKEW 16°-45°					BOTTOM REBAR		TOP REBAR	
		T1	T2	T3	B1	ST1(STIRRUPS)	ST2(STIRRUPS)					FL	FB	FD	f	g	FL	FB	FD	f	g	BF1	BF2	TF1	TF2
15.00 M. SEISMIC LEVEL 1	9.00	14-DB25	14-DB25	14-DB25	10-DB20	3-DB12@0.25	4-DB12@0.20	Ø 525x525	7	2	14	11.00	2.80	1.75	1.60	1.75	11.00	3.30	1.75	1.60	2.25	DB28@0.12 **	DB25@0.15	DB20@0.18	DB20@0.18
	10.00	12-DB28	12-DB28	12-DB28	10-DB20	3-DB12@0.25	4-DB12@0.20	Ø 525x525	7	2	14	11.00	2.80	1.85	1.60	1.75	11.00	3.30	1.85	1.60	2.25	DB28@0.12 **	DB25@0.15	DB20@0.18	DB20@0.18
	11.00	14-DB28	14-DB28	14-DB28	10-DB20	3-DB12@0.25	4-DB12@0.20	Ø 525x525	7	2	14	11.00	2.80	2.00	1.60	1.75	11.00	3.30	2.00	1.60	2.25	DB28@0.12 **	DB25@0.15	DB20@0.18	DB20@0.18
	12.00	15-DB28	15-DB28	15-DB28	10-DB20	3-DB12@0.25	4-DB12@0.175	Ø 525x525	8	2	16	13.00	2.80	2.00	1.66	1.75	13.00	3.30	2.00	1.66	2.25	DB28@0.09 **	DB25@0.14	DB20@0.18	DB20@0.18
15.00 M. SEISMIC LEVEL 2	9.00	14-DB25	14-DB25	14-DB25	10-DB20	3-DB12@0.25	4-DB12@0.20	Ø 525x525	7	2	14	11.00	2.80	1.75	1.60	1.75	11.00	3.30	1.75	1.60	2.25	DB28@0.12 **	DB25@0.15	DB20@0.18	DB20@0.18
	10.00	12-DB28	12-DB28	12-DB28	10-DB20	3-DB12@0.25	4-DB12@0.20	Ø 525x525	7	2	14	11.00	2.80	1.85	1.60	1.75	11.00	3.30	1.85	1.60	2.25	DB28@0.12 **	DB25@0.15	DB20@0.18	DB20@0.18
	11.00	14-DB28	14-DB28	14-DB28	10-DB20	3-DB12@0.25	4-DB12@0.175	Ø 525x525	7	2	14	11.00	2.80	2.00	1.60	1.75	11.00	3.30	2.00	1.60	2.25	DB28@0.12 **	DB25@0.15	DB20@0.18	DB20@0.18
	12.00	15-DB28	15-DB28	15-DB28	10-DB20	3-DB12@0.25	4-DB12@0.175	Ø 525x525	8	2	16	13.00	2.80	2.00	1.66	1.75	13.00	3.30	2.00	1.66	2.25	DB28@0.09 **	DB25@0.14	DB20@0.18	DB20@0.18

REMARK ; ** = 2 LAYERS

2.SPAN LENGTH 20.00 M., HEIGHT ≤ 8.00 M.

Ln (M.)	W (M.)	NO.OF I-GIRDER (Nɪ)	DIMENSION (M.)								C		REBAR COLUMN					
			A1	A2	A3	b	e	S	h1	h2	STRAIGHT	CURVED	D (M.)	CR1	CR2	ST3	CR3	ST4
20.00 M. SEISMIC LEVEL 1	9.00	5	10.00	1.30	1.60	1.60	1.40	2.00	1.00	1.50	1.00	1.00-1.50	1.20	34-DB28	34-DB28	DB12@0.15	34-DB28	DB12@0.30
	10.00	6	11.00	1.40	1.80	1.60	1.45	1.80	1.00	1.50	1.00	1.00-1.50	1.30	35-DB28	35-DB28	DB12@0.15	35-DB28	DB12@0.30
	11.00	6	12.00	1.50	2.00	1.60	1.50	2.00	1.00	1.50	1.00	1.00-1.50	1.40	36-DB28	36-DB28	DB12@0.15	36-DB28	DB12@0.30
	12.00	7	13.00	1.60	2.20	1.60	1.55	1.83	1.00	1.50	1.00	1.00-1.50	1.50	37-DB28	37-DB28	DB12@0.15	37-DB28	DB12@0.30
20.00 M. SEISMIC LEVEL 2	9.00	5	10.00	1.30	1.60	1.60	1.40	2.00	1.00	1.50	1.00	1.00-1.50	1.20	34-DB28	34-DB28	DB12@0.15	34-DB28	DB12@0.30
	10.00	6	11.00	1.40	1.80	1.60	1.45	1.80	1.00	1.50	1.00	1.00-1.50	1.30	35-DB28	35-DB28	DB12@0.15	35-DB28	DB12@0.30
	11.00	6	12.00	1.50	2.00	1.60	1.50	2.00	1.00	1.50	1.00	1.00-1.50	1.40	36-DB28	36-DB28	DB12@0.15	36-DB28	DB12@0.30
	12.00	7	13.00	1.60	2.20	1.60	1.55	1.83	1.00	1.50	1.00	1.00-1.50	1.50	37-DB28	37-DB28	DB12@0.15	37-DB28	DB12@0.30

Ln (M.)	W (M.)	REBAR CAP BEAM						PILE SIZING, PS (MM.)	Nc1	Nc2	NO.OF PILE	FOOTING SKEW 0°-15°					FOOTING SKEW 16°-45°				
		T1	T2	T3	B1	ST1(STIRRUPS)	ST2(STIRRUPS)					FL	FB	FD	f	g	FL	FB	FD	f	g
20.00 M. SEISMIC LEVEL 1	9.00	14-DB25	14-DB25	14-DB25	10-DB20	3-DB12@0.25	4-DB12@0.125	Ø 525x525	7	2	14	11.00	2.80	1.75	1.60	1.75	11.00	3.30	1.75	1.60	2.25
	10.00	14-DB28	14-DB28	14-DB28	10-DB20	3-DB12@0.25	4-DB12@0.125	Ø 525x525	8	2	16	13.00	2.80	1.85	1.66	1.75	13.00	3.30	1.85	1.66	2.25
	11.00	15-DB28	15-DB28	15-DB28	12-DB20	3-DB12@0.25	4-DB12@0.125	Ø 525x525	8	2	16	13.00	2.80	2.00	1.66	1.75	13.00	3.30	2.00	1.66	2.25
	12.00	18-DB28	18-DB28	18-DB28	12-DB20	3-DB12@0.25	5-DB12@0.125	Ø 650x650	6	2	12	12.00	3.25	2.00	2.12	1.95	12.00	3.75	2.00	2.12	2.45
20.00 M. SEISMIC LEVEL 2	9.00	14-DB25	14-DB25	14-DB25	10-DB20	3-DB12@0.25	4-DB12@0.125	Ø 525x525	7	2	14	11.00	2.80	1.75	1.60	1.75	11.00	3.30	1.75	1.60	2.25
	10.00	14-DB28	14-DB28	14-DB28	10-DB20	3-DB12@0.25	4-DB12@0.125	Ø 525x525	8	2	16	13.00	2.80	1.85	1.66	1.75	13.00	3.30	1.85	1.66	2.25
	11.00	15-DB28	15-DB28	15-DB28	12-DB20	3-DB12@0.25	4-DB12@0.125	Ø 525x525	8	2	16	13.00	2.80	2.00	1.66	1.75	13.00	3.30	2.00	1.66	2.25
	12.00	18-DB28	18-DB28	18-DB28	12-DB20	3-DB12@0.25	5-DB12@0.125	Ø 650x650	6	2	12	12.00	3.25	2.00	2.12	1.95	12.00	3.75	2.00	2.12	2.45

Ln (M.)	W (M.)	BOTTOM REBAR		TOP REBAR	
		BF1	BF2	TF1	TF2
20.00 M. SEISMIC LEVEL 1	9.00	DB28@0.11 **	DB25@0.15	DB20@0.18	DB20@0.19
	10.00	DB28@0.09 **	DB25@0.14	DB20@0.18	DB20@0.19
	11.00	DB28@0.09 **	DB25@0.14	DB20@0.18	DB20@0.19
	12.00	DB28@0.10 **	DB25@0.14	DB20@0.18	DB20@0.19
20.00 M. SEISMIC LEVEL 2	9.00	DB28@0.11 **	DB25@0.15	DB20@0.18	DB20@0.19
	10.00	DB28@0.09 **	DB25@0.14	DB20@0.18	DB20@0.19
	11.00	DB28@0.09 **	DB25@0.14	DB20@0.18	DB20@0.19
	12.00	DB28@0.10 **	DB25@0.14	DB20@0.18	DB20@0.19

REMARK ; ** = 2 LAYERS

ADJUST LENGTH FOR SKEW BRIDGE

VALUE OF SEC θ IN CASE OF SKEW BRIDGE (SKEW, θ)					
SKEW ANGLE, θ (DEGREE)	0	5	10	15	20
SEC θ	1.0000	1.0038	1.0154	1.0353	1.0642
SKEW ANGLE, θ (DEGREE)	25	30	35	40	45
SEC θ	1.1034	1.1547	1.2208	1.3054	1.4142

REF.	REVISION	SIGNATURE	DATE

KINGDOM OF THAILAND

MINISTRY OF TRANSPORT
DEPARTMENT OF HIGHWAYS

STANDARD DRAWING

SINGLE COLUMN PIER WITHOUT SIDEWALK (FOR I-GIRDER)
ROADWAY WIDTH 9.00 – 12.00 M. , 15.00 M.
AND 20.00 M. SPAN, HEIGHT ≤ 8.00 M.

DESIGNED : D.O.H. & CONSULTANTS	CHECKED : BUREAU OF LOCATION & DESIGN	DATE : OCT 2015
SUBMITTED : (DIRECTOR OF LOCATION & DESIGN BUREAU)		SCALE : AS SHOWN
APPROVED : (FOR DIRECTOR GENERAL)		DWG NO. PC-201
		SHEET NO. 261

D:\std dwg 2015\PC-201(REV00)

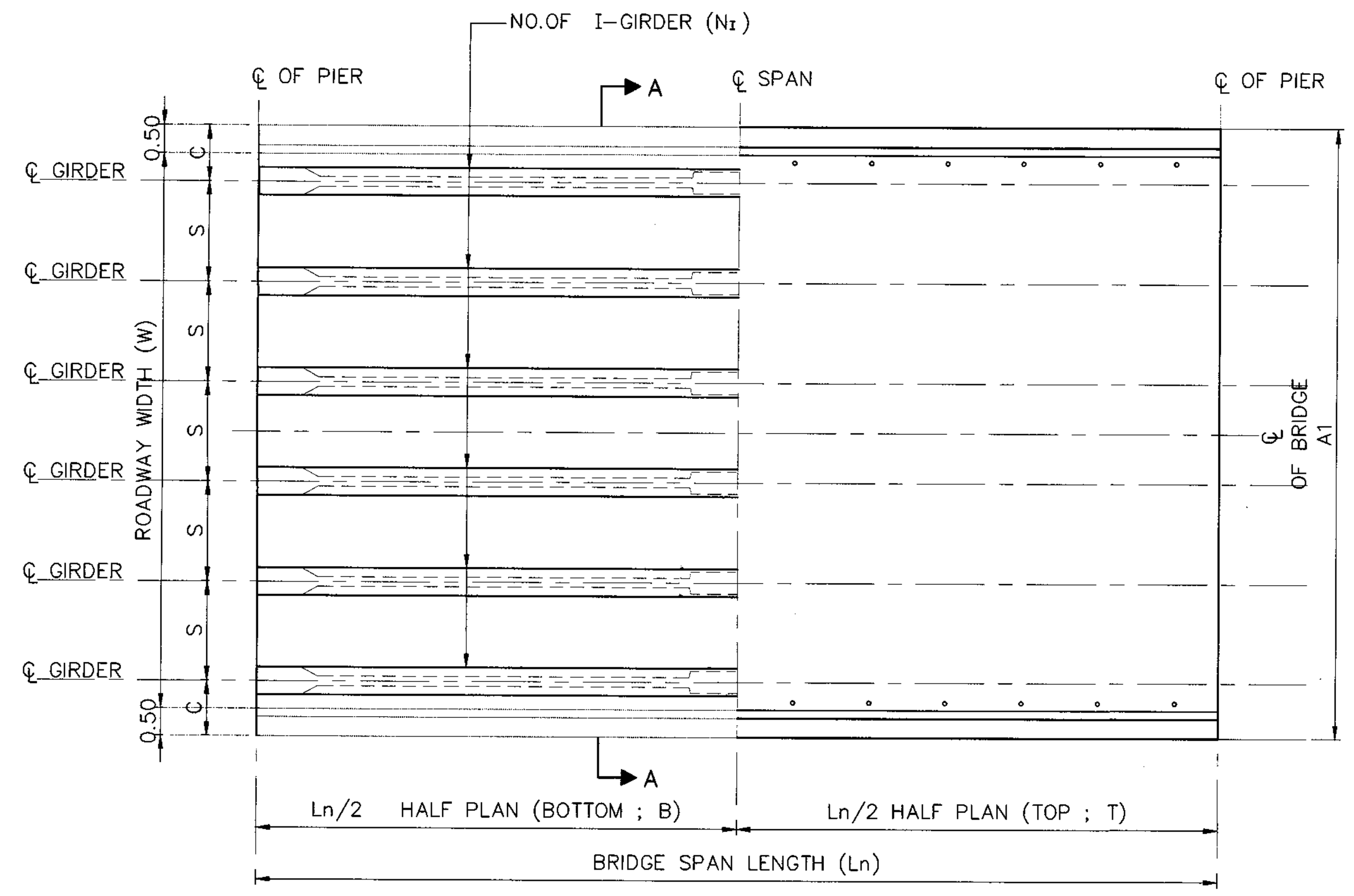

PLAN OF BRIDGE DECK

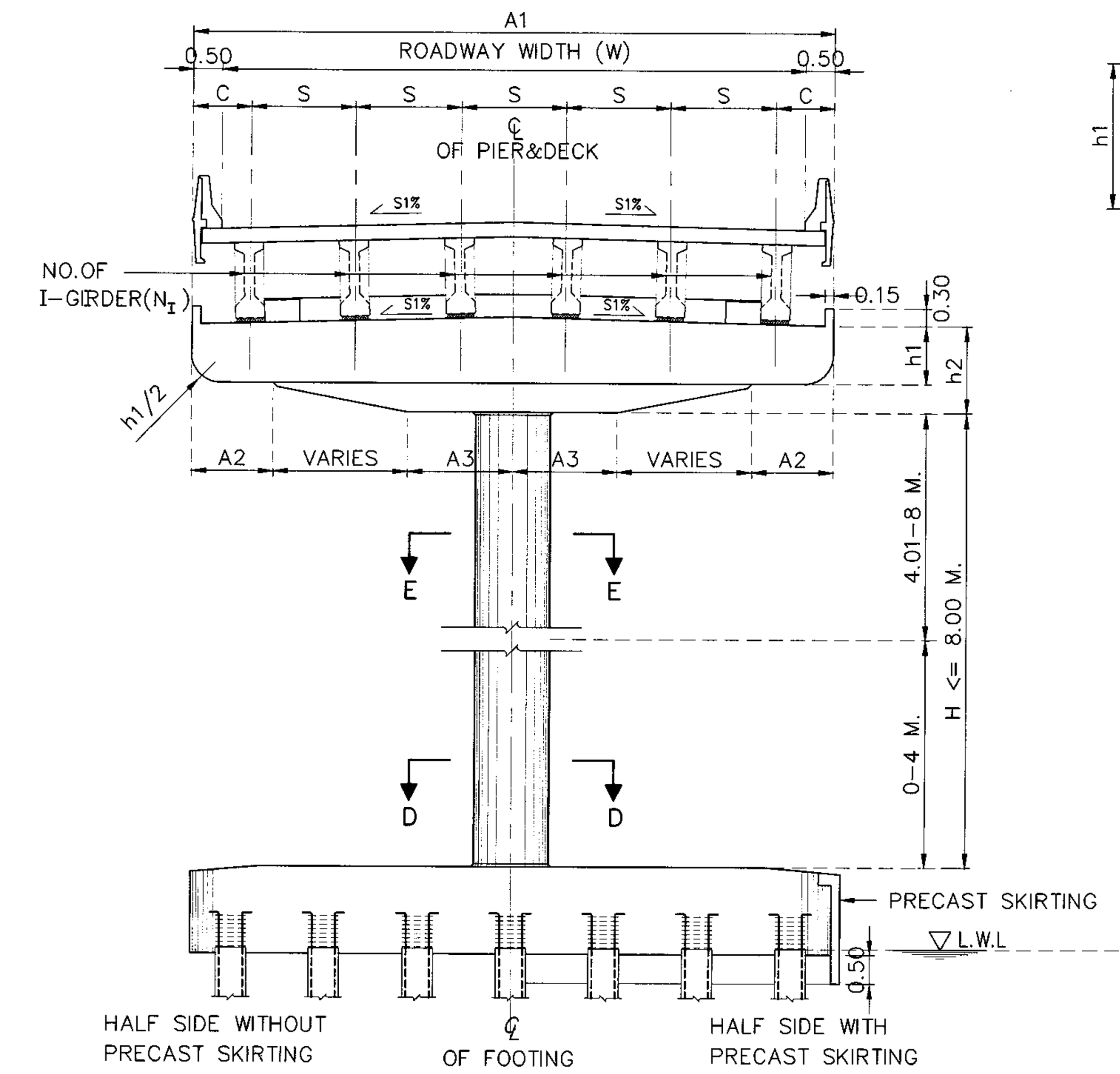

SECTION A-A

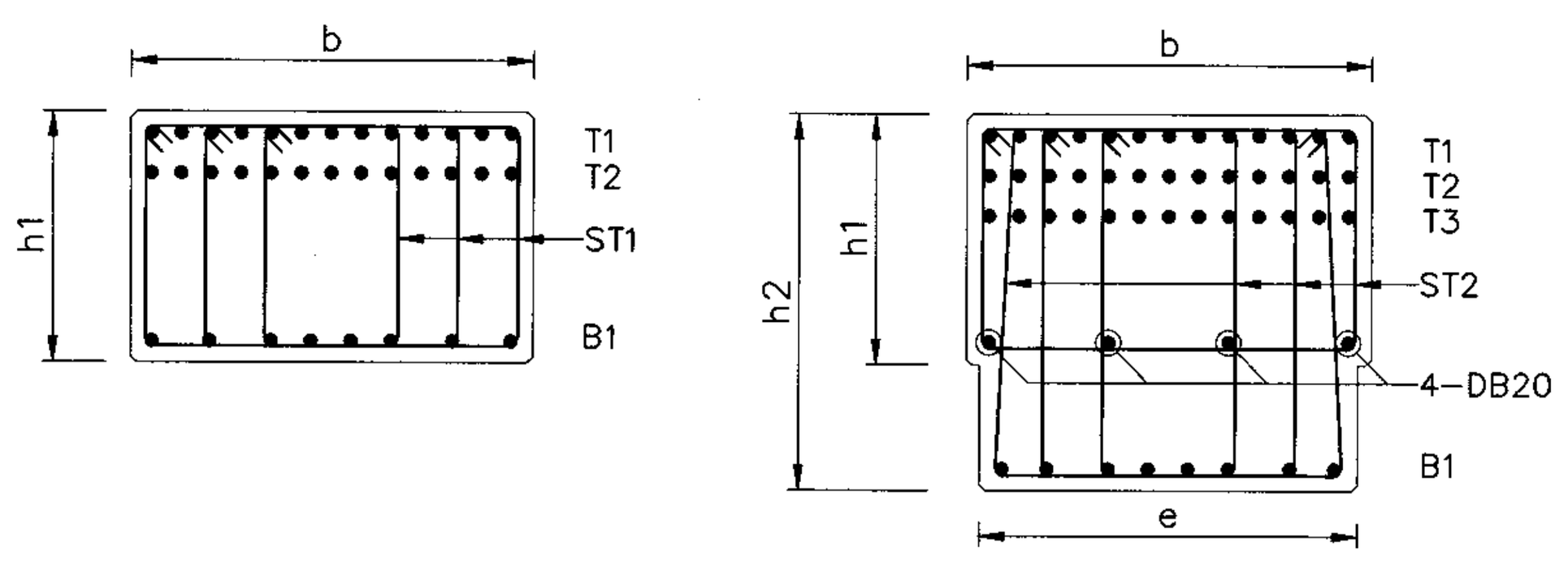

SECTION B-B

SECTION C-C

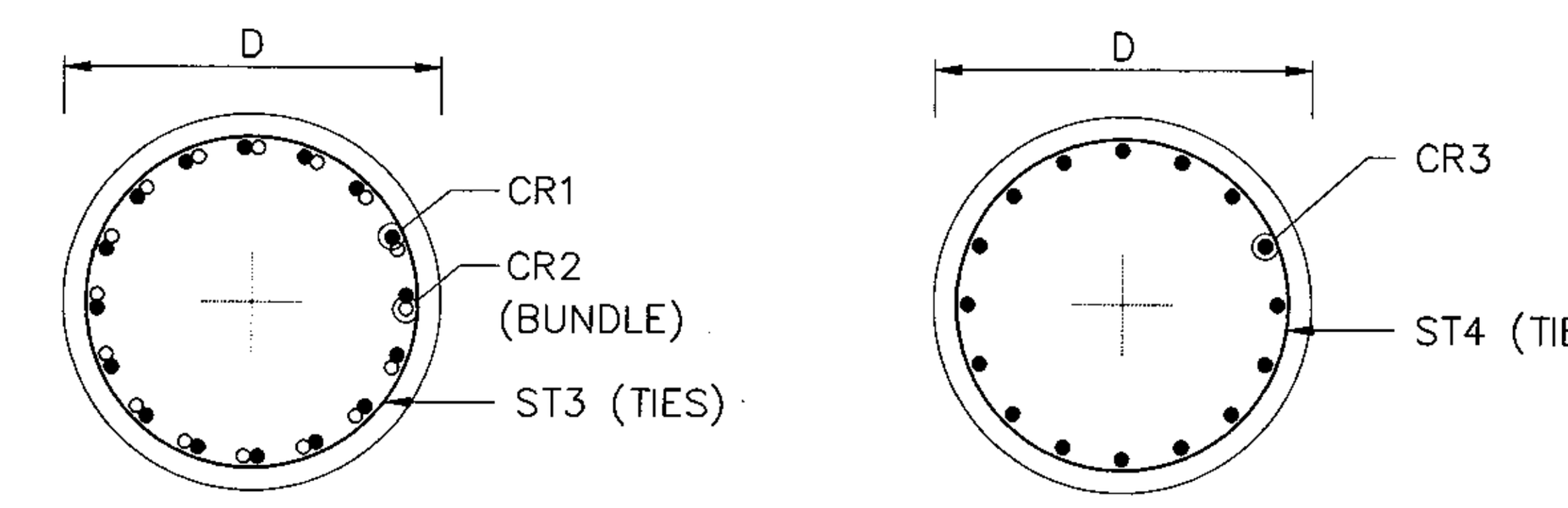

SECTION D-D

SECTION E-E

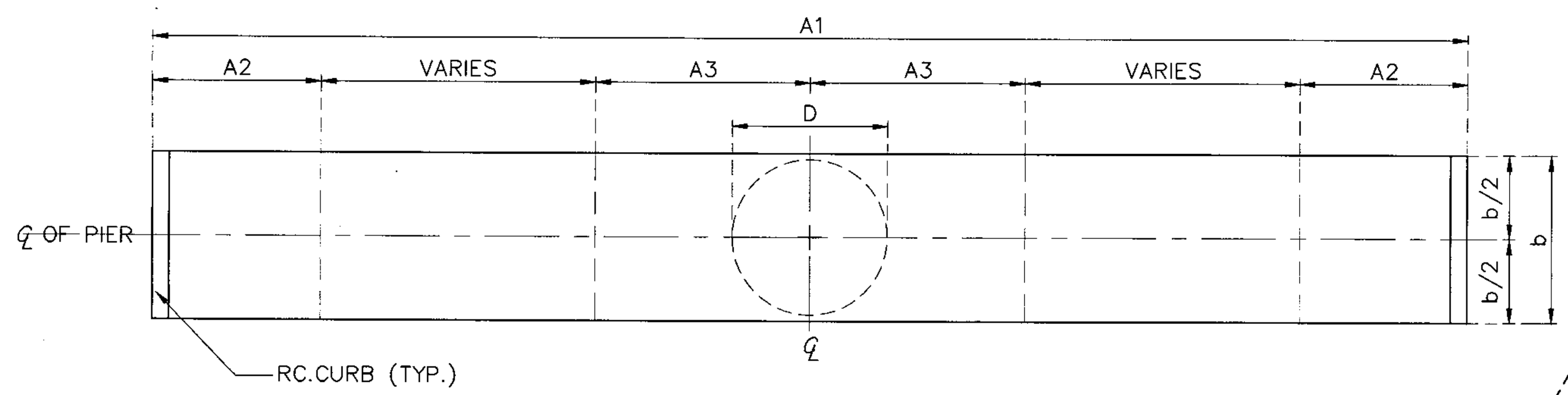

PLAN OF CAP

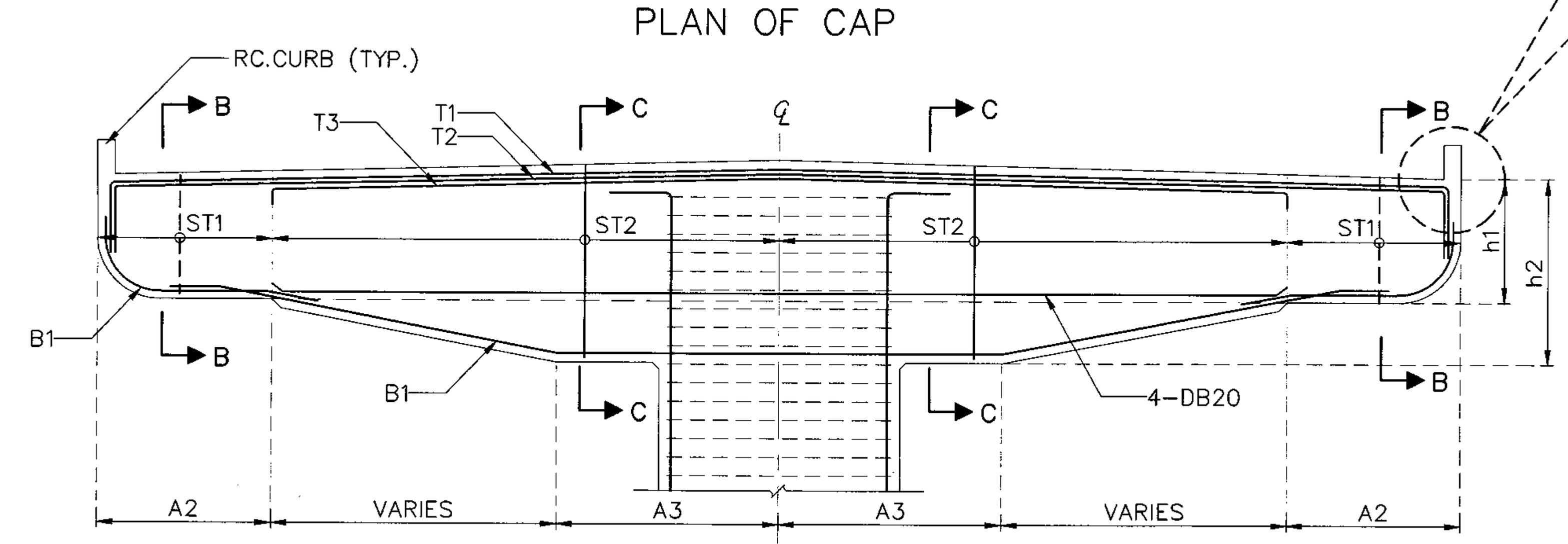

SECTION OF CAP

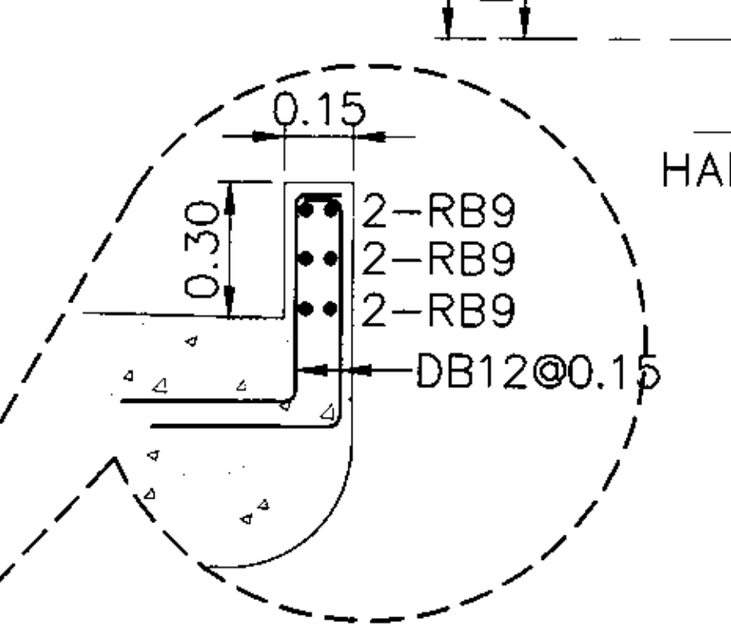

CURB DETAIL

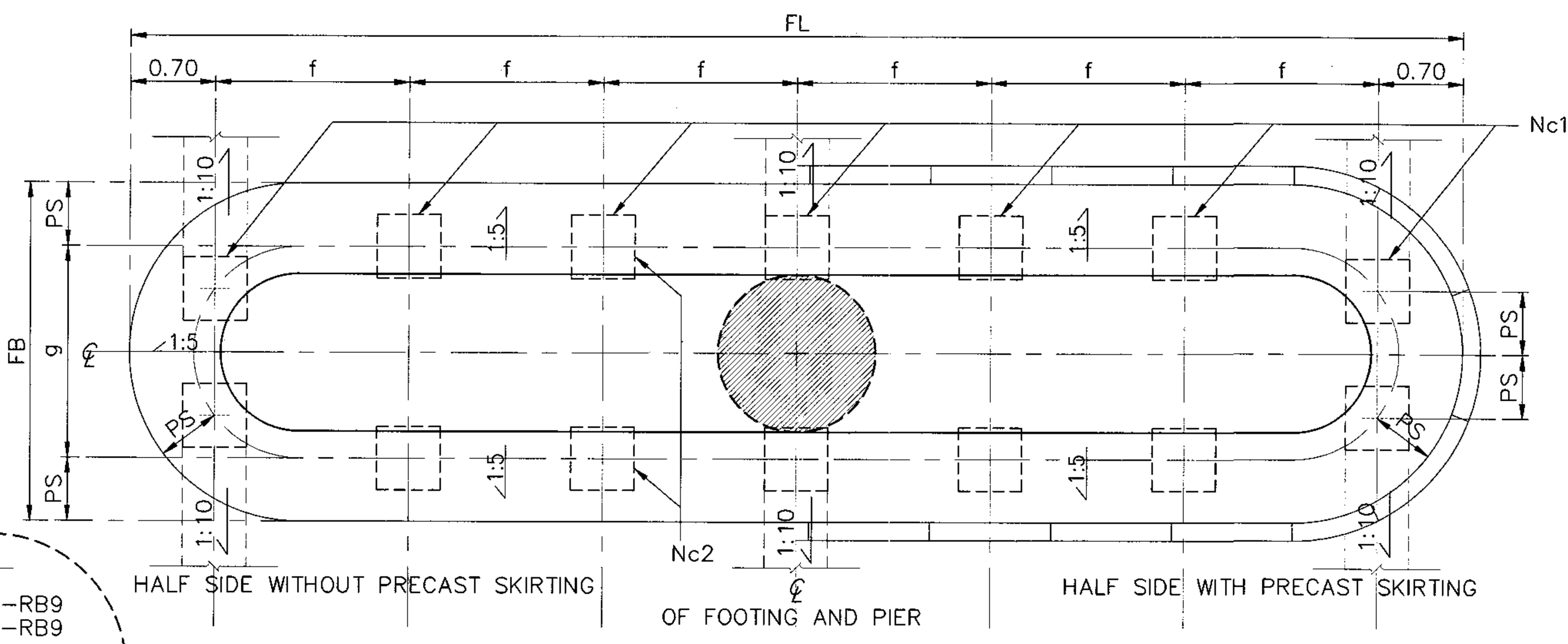

PLAN OF FOOTING

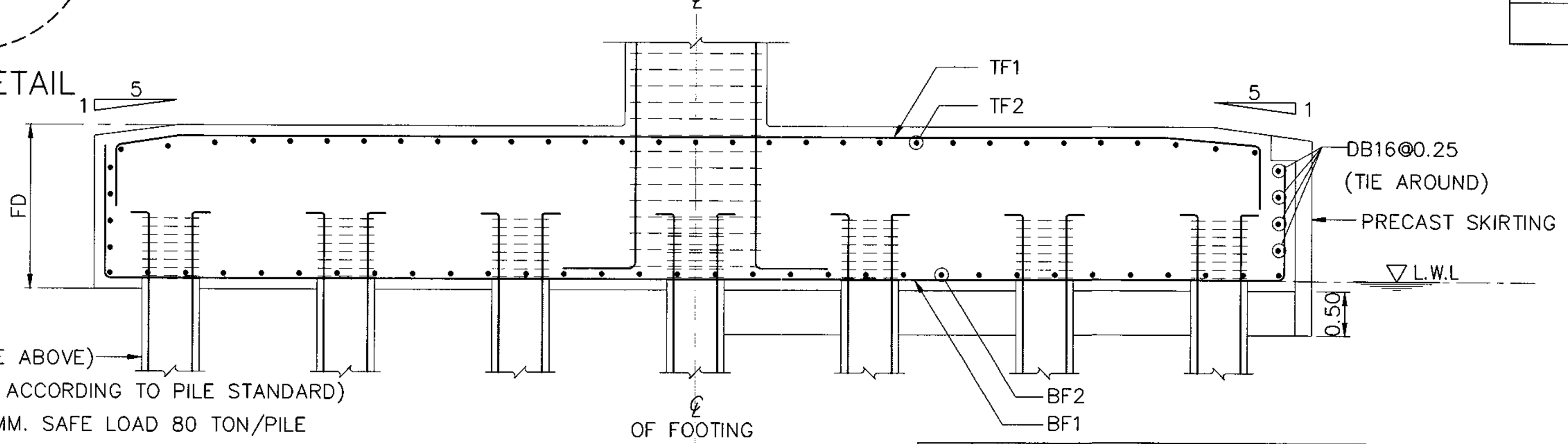

PILE (FROM TABLE ABOVE)
(OTHERS DETAILS ACCORDING TO PILE STANDARD)
PILE Ø525x525 MM. SAFE LOAD 80 TON/PILE
PILE Ø650x650 MM. SAFE LOAD 125 TON/PILE

SECTION OF FOOTING

NOTES :

1. ALL DIMENSIONS SHOWN ARE IN METERS UNLESS OTHERWISE INDICATED.
2. DESIGN LIVE LOAD : HL-93
3. A MINIMUM ULTIMATE COMPRESSIVE STRENGTH FOR A 150x150x150 MM. CUBE AT 28 DAYS AS FOLLOWS:
   A) FOR ABUTMENT AND WINGWALL 35 MPa. (357 KG/CM^2)
   B) FOR FOOTING 35 MPa. (357 KG/CM^2)
   C) FOR SIDEWALK AND BARRIER 35 MPa. (357 KG/CM^2)
4. REBAR SIZES SMALLER THAN 12 MM. SHALL BE TIS 20 GRADE SR 24 PLAIN ROUND BARS, OTHERS SHALL BE TIS 24 GRADE SD 40 DEFORMED BARS UNLESS OTHERWISE INDICATED.

1.SPAN LENGTH 15.00 M., HEIGHT ≤ 8.00 M.

Ln (M.)	W (M.)	NO.OF I-GIRDER (N_I)	DIMENSION (M.)								C		REBAR COLUMN					
			A1	A2	A3	b	e	S	h1	h2	STRAIGHT	CURVED	D (M.)	CR1	CR2	ST3	CR3	ST4
15.00 M. SEISMIC LEVEL 1	9.00	5	10.00	1.30	1.60	1.60	1.40	2.00	1.00	1.50	1.00	1.00-1.25	1.20	33-DB28	33-DB28	DB12@0.15	33-DB28	DB12@0.30
	10.00	6	11.00	1.40	1.80	1.60	1.45	1.80	1.00	1.50	1.00	1.00-1.25	1.30	32-DB28	32-DB28	DB12@0.15	32-DB28	DB12@0.30
	11.00	6	12.00	1.50	2.00	1.60	1.45	2.00	1.00	1.50	1.00	1.00-1.25	1.30	34-DB28	34-DB28	DB12@0.15	34-DB28	DB12@0.30
	12.00	7	13.00	1.60	2.20	1.60	1.50	1.83	1.00	1.50	1.00	1.00-1.25	1.40	38-DB28	38-DB28	DB12@0.15	38-DB28	DB12@0.30
15.00 M. SEISMIC LEVEL 2	9.00	5	10.00	1.30	1.60	1.60	1.40	2.00	1.00	1.50	1.00	1.00-1.25	1.20	33-DB28	33-DB28	DB12@0.15	33-DB28	DB12@0.30
	10.00	6	11.00	1.40	1.80	1.60	1.45	1.80	1.00	1.50	1.00	1.00-1.25	1.30	32-DB28	32-DB28	DB12@0.15	32-DB28	DB12@0.30
	11.00	6	12.00	1.50	2.00	1.60	1.45	2.00	1.00	1.50	1.00	1.00-1.25	1.30	34-DB28	34-DB28	DB12@0.15	34-DB28	DB12@0.30
	12.00	7	13.00	1.60	2.20	1.60	1.50	1.83	1.00	1.50	1.00	1.00-1.25	1.40	38-DB28	38-DB28	DB12@0.15	38-DB28	DB12@0.30

Ln (M.)	W (M.)	REBAR CAP BEAM						PILE SIZING, PS (MM.)	Nc1	Nc2	NO.OF PILE	FOOTING SKEW 0°-15°					FOOTING SKEW 16°-45°					BOTTOM REBAR		TOP REBAR	
		T1	T2	T3	B1	ST1(STIRRUPS)	ST2(STIRRUPS)					FL	FB	FD	f	g	FL	FB	FD	f	g	BF1	BF2	TF1	TF2
15.00 M. SEISMIC LEVEL 1	9.00	14-DB25	14-DB25	14-DB25	10-DB20	3-DB12@0.25	4-DB12@0.20	Ø 525x525	7	2	14	11.00	2.80	1.75	1.60	1.75	11.00	3.30	1.75	1.60	2.25	DB28@0.12 **	DB25@0.15	DB20@0.18	DB20@0.18
	10.00	12-DB28	12-DB28	12-DB28	10-DB20	3-DB12@0.25	4-DB12@0.20	Ø 525x525	7	2	14	11.00	2.80	1.85	1.60	1.75	11.00	3.30	1.85	1.60	2.25	DB28@0.12 **	DB25@0.15	DB20@0.18	DB20@0.18
	11.00	14-DB28	14-DB28	14-DB28	10-DB20	3-DB12@0.25	4-DB12@0.20	Ø 525x525	7	2	14	11.00	2.80	2.00	1.60	1.75	11.00	3.30	2.00	1.60	2.25	DB28@0.12 **	DB25@0.15	DB20@0.18	DB20@0.18
	12.00	15-DB28	15-DB28	15-DB28	10-DB20	3-DB12@0.25	4-DB12@0.175	Ø 525x525	8	2	16	13.00	2.80	2.00	1.66	1.75	13.00	3.30	2.00	1.66	2.25	DB28@0.09 **	DB25@0.14	DB20@0.18	DB20@0.18
15.00 M. SEISMIC LEVEL 2	9.00	14-DB25	14-DB25	14-DB25	10-DB20	3-DB12@0.25	4-DB12@0.20	Ø 525x525	7	2	14	11.00	2.80	1.75	1.60	1.75	11.00	3.30	1.75	1.60	2.25	DB28@0.12 **	DB25@0.15	DB20@0.18	DB20@0.18
	10.00	12-DB28	12-DB28	12-DB28	10-DB20	3-DB12@0.25	4-DB12@0.20	Ø 525x525	7	2	14	11.00	2.80	1.85	1.60	1.75	11.00	3.30	1.85	1.60	2.25	DB28@0.12 **	DB25@0.15	DB20@0.18	DB20@0.18
	11.00	14-DB28	14-DB28	14-DB28	10-DB20	3-DB12@0.25	4-DB12@0.175	Ø 525x525	7	2	14	11.00	2.80	2.00	1.60	1.75	11.00	3.30	2.00	1.60	2.25	DB28@0.12 **	DB25@0.15	DB20@0.18	DB20@0.18
	12.00	15-DB28	15-DB28	15-DB28	10-DB20	3-DB12@0.25	4-DB12@0.175	Ø 525x525	8	2	16	13.00	2.80	2.00	1.66	1.75	13.00	3.30	2.00	1.66	2.25	DB28@0.09 **	DB25@0.14	DB20@0.18	DB20@0.18

REMARK ; ** = 2 LAYERS

2.SPAN LENGTH 20.00 M., HEIGHT ≤ 8.00 M.

Ln (M.)	W (M.)	NO.OF I-GIRDER (N_I)	DIMENSION (M.)								C		REBAR COLUMN					
			A1	A2	A3	b	e	S	h1	h2	STRAIGHT	CURVED	D (M.)	CR1	CR2	ST3	CR3	ST4
20.00 M. SEISMIC LEVEL 1	9.00	5	10.00	1.30	1.60	1.60	1.40	2.00	1.00	1.50	1.00	1.00-1.50	1.20	34-DB28	34-DB28	DB12@0.15	34-DB28	DB12@0.30
	10.00	6	11.00	1.40	1.80	1.60	1.45	1.80	1.00	1.50	1.00	1.00-1.50	1.30	35-DB28	35-DB28	DB12@0.15	35-DB28	DB12@0.30
	11.00	6	12.00	1.50	2.00	1.60	1.50	2.00	1.00	1.50	1.00	1.00-1.50	1.40	36-DB28	36-DB28	DB12@0.15	36-DB28	DB12@0.30
	12.00	7	13.00	1.60	2.20	1.60	1.55	1.83	1.00	1.50	1.00	1.00-1.50	1.50	37-DB28	37-DB28	DB12@0.15	37-DB28	DB12@0.30
20.00 M. SEISMIC LEVEL 2	9.00	5	10.00	1.30	1.60	1.60	1.40	2.00	1.00	1.50	1.00	1.00-1.50	1.20	34-DB28	34-DB28	DB12@0.15	34-DB28	DB12@0.30
	10.00	6	11.00	1.40	1.80	1.60	1.45	1.80	1.00	1.50	1.00	1.00-1.50	1.30	35-DB28	35-DB28	DB12@0.15	35-DB28	DB12@0.30
	11.00	6	12.00	1.50	2.00	1.60	1.50	2.00	1.00	1.50	1.00	1.00-1.50	1.40	36-DB28	36-DB28	DB12@0.15	36-DB28	DB12@0.30
	12.00	7	13.00	1.60	2.20	1.60	1.55	1.83	1.00	1.50	1.00	1.00-1.50	1.50	37-DB28	37-DB28	DB12@0.15	37-DB28	DB12@0.30

Ln (M.)	W (M.)	REBAR CAP BEAM						PILE SIZING, PS (MM.)	Nc1	Nc2	NO.OF PILE	FOOTING SKEW 0°-15°					FOOTING SKEW 16°-45°				
		T1	T2	T3	B1	ST1(STIRRUPS)	ST2(STIRRUPS)					FL	FB	FD	f	g	FL	FB	FD	f	g
20.00 M. SEISMIC LEVEL 1	9.00	14-DB25	14-DB25	14-DB25	10-DB20	3-DB12@0.25	4-DB12@0.125	Ø 525x525	7	2	14	11.00	2.80	1.75	1.60	1.75	11.00	3.30	1.75	1.60	2.25
	10.00	14-DB28	14-DB28	14-DB28	10-DB20	3-DB12@0.25	4-DB12@0.125	Ø 525x525	8	2	16	13.00	2.80	1.85	1.66	1.75	13.00	3.30	1.85	1.66	2.25
	11.00	15-DB28	15-DB28	15-DB28	12-DB20	3-DB12@0.25	4-DB12@0.125	Ø 525x525	8	2	16	13.00	2.80	2.00	1.66	1.75	13.00	3.30	2.00	1.66	2.25
	12.00	18-DB28	18-DB28	18-DB28	12-DB20	3-DB12@0.25	5-DB12@0.125	Ø 650x650	6	2	12	12.00	3.25	2.00	2.12	1.95	12.00	3.75	2.00	2.12	2.45
20.00 M. SEISMIC LEVEL 2	9.00	14-DB25	14-DB25	14-DB25	10-DB20	3-DB12@0.25	4-DB12@0.125	Ø 525x525	7	2	14	11.00	2.80	1.75	1.60	1.75	11.00	3.30	1.75	1.60	2.25
	10.00	14-DB28	14-DB28	14-DB28	10-DB20	3-DB12@0.25	4-DB12@0.125	Ø 525x525	8	2	16	13.00	2.80	1.85	1.66	1.75	13.00	3.30	1.85	1.66	2.25
	11.00	15-DB28	15-DB28	15-DB28	12-DB20	3-DB12@0.25	4-DB12@0.125	Ø 525x525	8	2	16	13.00	2.80	2.00	1.66	1.75	13.00	3.30	2.00	1.66	2.25
	12.00	18-DB28	18-DB28	18-DB28	12-DB20	3-DB12@0.25	5-DB12@0.125	Ø 650x650	6	2	12	12.00	3.25	2.00	2.12	1.95	12.00	3.75	2.00	2.12	2.45

Ln (M.)	W (M.)	BOTTOM REBAR		TOP REBAR	
		BF1	BF2	TF1	TF2
20.00 M. SEISMIC LEVEL 1	9.00	DB28@0.11 **	DB25@0.15	DB20@0.18	DB20@0.19
	10.00	DB28@0.09 **	DB25@0.14	DB20@0.18	DB20@0.19
	11.00	DB28@0.09 **	DB25@0.14	DB20@0.18	DB20@0.19
	12.00	DB28@0.10 **	DB25@0.14	DB20@0.18	DB20@0.19
20.00 M. SEISMIC LEVEL 2	9.00	DB28@0.11 **	DB25@0.15	DB20@0.18	DB20@0.19
	10.00	DB28@0.09 **	DB25@0.14	DB20@0.18	DB20@0.19
	11.00	DB28@0.09 **	DB25@0.14	DB20@0.18	DB20@0.19
	12.00	DB28@0.10 **	DB25@0.14	DB20@0.18	DB20@0.19

REMARK ; ** = 2 LAYERS

ADJUST LENGTH FOR SKEW BRIDGE

VALUE OF SEC θ IN CASE OF SKEW BRIDGE (SKEW, θ)					
SKEW ANGLE, θ (DEGREE)	0	5	10	15	20
SEC θ	1.0000	1.0038	1.0154	1.0353	1.0642
SKEW ANGLE, θ (DEGREE)	25	30	35	40	45
SEC θ	1.1034	1.1547	1.2208	1.3054	1.4142

REV.	REVISION	SIGNATURE	DATE
REV.1	REVISION 1/2018	[signature]	JAN 2018

KINGDOM OF THAILAND
MINISTRY OF TRANSPORT
DEPARTMENT OF HIGHWAYS

STANDARD DRAWING
SINGLE COLUMN PIER WITHOUT SIDEWALK (FOR I-GIRDER)
ROADWAY WIDTH 9.00 – 12.00 M. , 15.00 M.
AND 20.00 M. SPAN, HEIGHT ≤ 8.00 M.

DESIGNED : D.O.H. & CONSULTANTS **CHECKED :** BUREAU OF LOCATION & DESIGN **DATE :** MAR 2018
SUBMITTED : (DIRECTOR OF LOCATION & DESIGN BUREAU) **SCALE :** AS SHOWN
APPROVED : (FOR DIRECTOR GENERAL) **DWG NO.** PC-201
SHEET NO. 261/R1

D:\20141103_Team Group\ปี 2558\10P2045_STANDARD DRAWING DOH\Standard Drawing DOH_61.02.19\แบบมาตรฐาน(แก้ไข)_Revision 1.2017-JAN2018\ENG\STANDARD FINAL-1-CAD(ENG)\STRUCTURAL WORK\Structural Work-Sec. 1 Bridge Span Not More Than 20.00 M\PC-201(REV01)

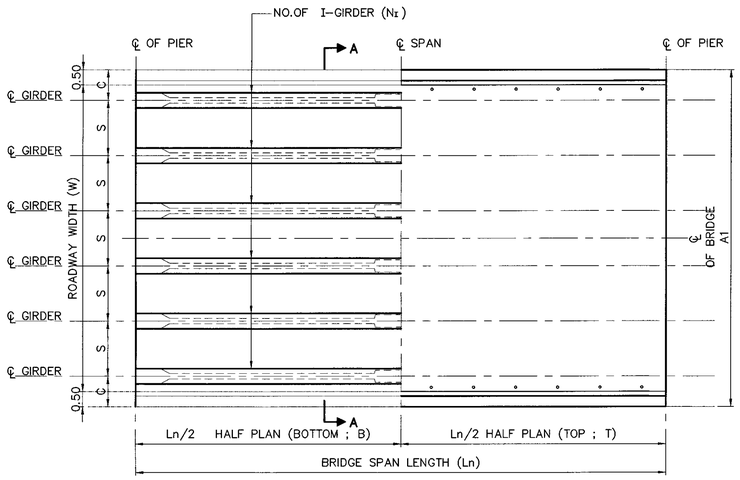

PLAN OF BRIDGE DECK

NOTE :
1. ALL DIMENSIONS SHOWN ARE IN METERS UNLESS OTHERWISE INDICATED
2. LIVE LOADING : VEHICLE LOAD HL-93
3. A MINIMUM ULTIMATE COMPRESSIVE STRENGTH FOR A 150X150X150 MM. CUBE AT 28 DAYS AS FOLLOWS :
   A) FOR COLUMN AND CAP BEAM 35 MPa
   B) FOR FOOTING 35 MPa
4. REBARS SMALLER THAN RB9 MM. SHALL BE TIS 20 GRADE SR 24 PLAIN ROUND BARS, OTHERS SHALL BE TIS 24 GRADE SD40 DEFORMED BARS UNLESS OTHERWISE INDICATED.

1.SPAN LENGTH 15.00 M., HEIGHT ≤ 8.00 M.

Ln (M.)	W (M.)	NO.OF I-GIRDER (NI)	DIMENSION (M.)								C		REBAR COLUMN					
			A1	A2	A3	b	e	S	h1	h2	STRAIGHT	CURVED	Dx1.5D(M.)	CR1	CR2	ST3	CR3	ST4
15.00 M. SEISMIC LEVEL 1	13.00	7	14.00	1.70	2.30	1.80	1.60	2.00	1.00	1.70	1.00	1.00-1.25	1.40x2.10	48-DB28	–	DB12@0.15	44-DB28	DB12@0.30
	14.00	8	15.00	1.80	2.50	1.80	1.60	1.86	1.00	1.70	1.00	1.00-1.25	1.40x2.10	60-DB28	–	DB12@0.15	50-DB28	DB12@0.30
	15.00	8	16.00	2.00	2.70	1.80	1.60	2.00	1.00	1.70	1.00	1.00-1.25	1.40x2.10	60-DB28	–	DB12@0.15	50-DB28	DB12@0.30
15.00 M. SEISMIC LEVEL 2	13.00	7	14.00	1.70	2.30	1.80	1.60	2.00	1.00	1.70	1.00	1.00-1.25	1.40x2.10	48-DB28	–	DB12@0.15	44-DB28	DB12@0.30
	14.00	8	15.00	1.80	2.50	1.80	1.60	1.86	1.00	1.70	1.00	1.00-1.25	1.40x2.10	60-DB28	–	DB12@0.15	50-DB28	DB12@0.30
	15.00	8	16.00	2.00	2.70	1.80	1.60	2.00	1.00	1.70	1.00	1.00-1.25	1.40x2.10	60-DB28	–	DB12@0.15	50-DB28	DB12@0.30

Ln (M.)	W (M.)	REBAR CAP BEAM						PILE SIZING, PS (MM.)	Nc1	Nc2	NO.OF PILE	FOOTING SKEW 0°-15°					FOOTING SKEW 16°-45°					BOTTOM REBAR		TOP REBAR	
		T1	T2	T3	B1	ST1(STIRRUPS)	ST2(STIRRUPS)					FL	FB	FD	f	g	FL	FB	FD	f	g	BF1	BF2	TF1	TF2
15.00 M. SEISMIC LEVEL 1	13.00	15-DB28	15-DB28	15-DB28	10-DB20	3-DB12@0.25	4-DB12@0.175	Ø 525x525	8	2	16	13.00	2.80	2.00	1.66	1.75	13.00	3.30	2.00	1.66	2.25	DB28@0.09 **	DB25@0.14	DB20@0.18	DB20@0.18
	14.00	18-DB28	18-DB28	18-DB28	12-DB20	3-DB12@0.25	4-DB12@0.150	Ø 525x525	9	2	18	15.00	2.80	2.20	1.70	1.75	15.00	3.30	2.20	1.70	2.25	DB28@0.09 **	DB25@0.13	DB20@0.16	DB20@0.16
	15.00	18-DB28	18-DB28	18-DB28	12-DB20	3-DB12@0.25	4-DB12@0.125	Ø 525x525	9	2	18	15.00	2.80	2.20	1.70	1.75	15.00	3.30	2.20	1.70	2.25	DB28@0.08 **	DB25@0.13	DB20@0.16	DB20@0.16
15.00 M. SEISMIC LEVEL 2	13.00	15-DB28	15-DB28	15-DB28	10-DB20	3-DB12@0.25	4-DB12@0.175	Ø 525x525	8	2	16	13.00	2.80	2.00	1.66	1.75	13.00	3.30	2.00	1.66	2.25	DB28@0.09 **	DB25@0.14	DB20@0.18	DB20@0.18
	14.00	18-DB28	18-DB28	18-DB28	12-DB20	3-DB12@0.25	4-DB12@0.150	Ø 525x525	9	2	18	15.00	2.80	2.20	1.70	1.75	15.00	3.30	2.20	1.70	2.25	DB28@0.09 **	DB25@0.13	DB20@0.16	DB20@0.16
	15.00	18-DB28	18-DB28	18-DB28	12-DB20	3-DB12@0.25	4-DB12@0.125	Ø 525x525	9	2	18	15.00	2.80	2.20	1.70	1.75	15.00	3.30	2.20	1.70	2.25	DB28@0.08 **	DB25@0.13	DB20@0.16	DB20@0.16

REMARK ; ** = 2 LAYERS

2.SPAN LENGTH 20.00 M., HEIGHT ≤ 8.00 M.

Ln (M.)	W (M.)	NO.OF I-GIRDER (NI)	DIMENSION (M.)								C		REBAR COLUMN					
			A1	A2	A3	b	e	S	h1	h2	STRAIGHT	CURVED	Dx1.5D(M.)	CR1	CR2	ST3	CR3	ST4
20.00 M. SEISMIC LEVEL 1	13.00	7	14.00	1.70	2.30	1.80	1.60	2.00	1.00	1.70	1.00	1.00-1.50	1.40x2.10	48-DB28	–	DB12@0.15	44-DB28	DB12@0.30
	14.00	8	15.00	1.80	2.50	1.80	1.60	1.86	1.00	1.70	1.00	1.00-1.50	1.40x2.10	60-DB28	–	DB12@0.15	50-DB28	DB12@0.30
	15.00	8	16.00	2.00	2.70	1.80	1.60	2.00	1.00	1.70	1.00	1.00-1.50	1.40x2.10	68-DB28	–	DB12@0.15	56-DB28	DB12@0.30
20.00 M. SEISMIC LEVEL 2	13.00	7	14.00	1.70	2.30	1.80	1.60	2.00	1.00	1.70	1.00	1.00-1.50	1.40x2.10	48-DB28	–	DB12@0.15	44-DB28	DB12@0.30
	14.00	8	15.00	1.80	2.50	1.80	1.60	1.86	1.00	1.70	1.00	1.00-1.50	1.40x2.10	60-DB28	–	DB12@0.15	50-DB28	DB12@0.30
	15.00	8	16.00	2.00	2.70	1.80	1.60	2.00	1.00	1.70	1.00	1.00-1.50	1.40x2.10	68-DB28	–	DB12@0.15	56-DB28	DB12@0.30

Ln (M.)	W (M.)	REBAR CAP BEAM						PILE SIZING, PS (MM.)	Nc1	Nc2	NO.OF PILE	FOOTING SKEW 0°-15°					FOOTING SKEW 16°-45°				
		T1	T2	T3	B1	ST1(STIRRUPS)	ST2(STIRRUPS)					FL	FB	FD	f	g	FL	FB	FD	f	g
20.00 M. SEISMIC LEVEL 1	13.00	18-DB28	18-DB28	18-DB28	12-DB20	3-DB12@0.25	5-DB12@0.125	Ø 650x650	6	2	12	12.00	3.25	2.00	2.12	1.95	12.00	3.75	2.00	2.12	2.45
	14.00	19-DB28	19-DB28	19-DB28	12-DB20	3-DB12@0.25	5-DB12@0.125	Ø 650x650	7	2	14	14.00	3.25	2.20	2.10	1.95	14.00	3.75	2.20	2.10	2.45
	15.00	21-DB28	21-DB28	21-DB28	12-DB20	3-DB12@0.25	5-DB12@0.125	Ø 650x650	7	2	14	14.00	3.25	2.20	2.10	1.95	14.00	3.75	2.20	2.10	2.45
20.00 M. SEISMIC LEVEL 2	13.00	18-DB28	18-DB28	18-DB28	12-DB20	3-DB12@0.25	5-DB12@0.125	Ø 650x650	6	2	12	12.00	3.25	2.00	2.12	1.95	12.00	3.75	2.00	2.12	2.45
	14.00	19-DB28	19-DB28	19-DB28	12-DB20	3-DB12@0.25	5-DB12@0.125	Ø 650x650	7	2	14	14.00	3.25	2.20	2.10	1.95	14.00	3.75	2.20	2.10	2.45
	15.00	21-DB28	21-DB28	21-DB28	12-DB20	3-DB12@0.25	5-DB12@0.125	Ø 650x650	7	2	14	14.00	3.25	2.20	2.10	1.95	14.00	3.75	2.20	2.10	2.45

Ln (M.)	W (M.)	BOTTOM REBAR		TOP REBAR	
		BF1	BF2	TF1	TF2
20.00 M. SEISMIC LEVEL 1	13.00	DB28@0.10 **	DB25@0.13	DB20@0.16	DB20@0.17
	14.00	DB28@0.09 **	DB25@0.13	DB20@0.16	DB20@0.17
	15.00	DB28@0.09 **	DB25@0.13	DB20@0.16	DB20@0.17
20.00 M. SEISMIC LEVEL 2	13.00	DB28@0.10 **	DB25@0.13	DB20@0.16	DB20@0.17
	14.00	DB28@0.09 **	DB25@0.13	DB20@0.16	DB20@0.17
	15.00	DB28@0.09 **	DB25@0.13	DB20@0.16	DB20@0.17

REMARK ; ** = 2 LAYERS

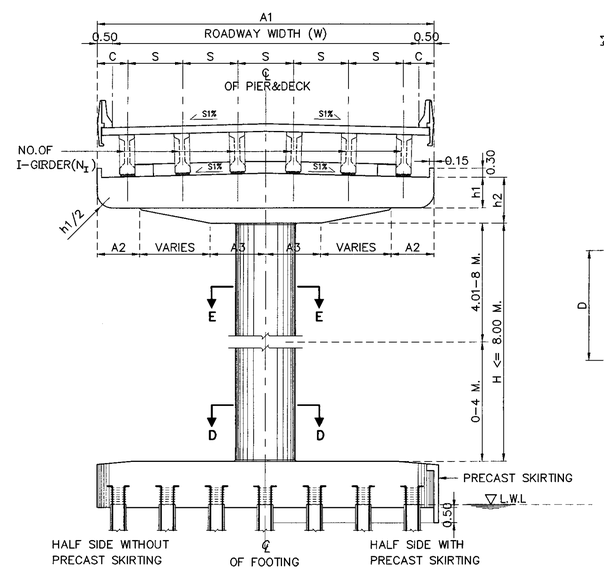

SECTION A-A

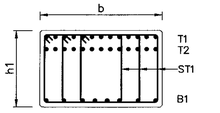

SECTION B-B

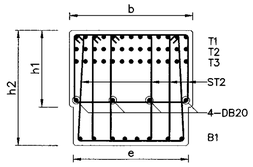

SECTION C-C

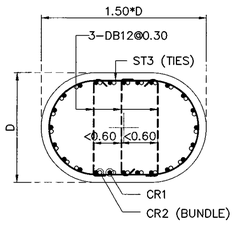

SECTION D-D

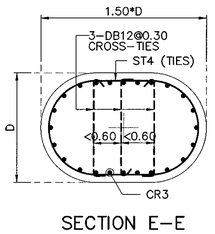

SECTION E-E

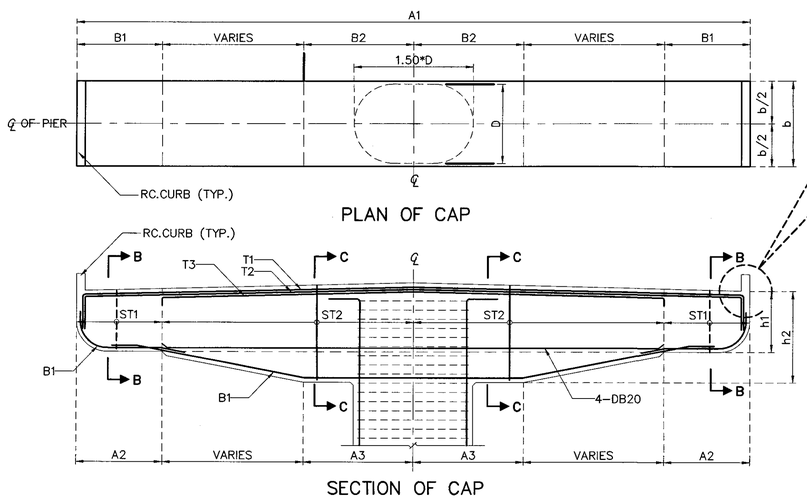

PLAN OF CAP

SECTION OF CAP

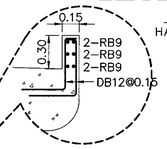

CURB DETAIL

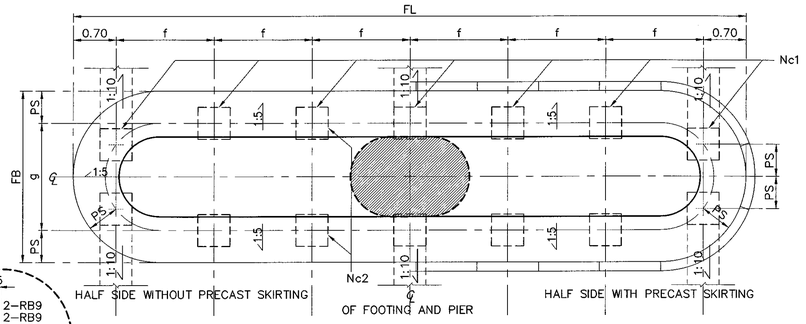

PLAN OF FOOTING

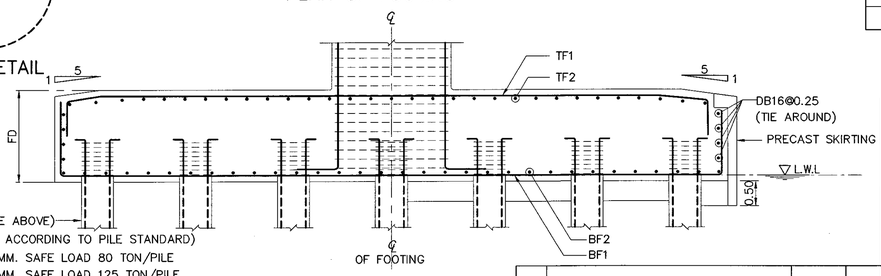

PILE (FROM TABLE ABOVE)
(OTHERS DETAILS ACCORDING TO PILE STANDARD)
PILE Ø 525x525 MM. SAFE LOAD 80 TON/PILE
PILE Ø 650x650 MM. SAFE LOAD 125 TON/PILE

SECTION OF FOOTING

ADJUST LENGTH FOR SKEW BRIDGE

VALUE OF SEC θ IN CASE OF SKEW BRIDGE (SKEW, θ)					
SKEW ANGLE, θ (DEGREE)	0	5	10	15	20
SEC θ	1.0000	1.0038	1.0154	1.0353	1.0642
SKEW ANGLE, θ (DEGREE)	25	30	35	40	45
SEC θ	1.1034	1.1547	1.2208	1.3054	1.4142

KINGDOM OF THAILAND

MINISTRY OF TRANSPORT
DEPARTMENT OF HIGHWAYS

STANDARD DRAWING

SINGLE COLUMN PIER WITHOUT SIDEWALK (FOR I-GIRDER)
ROADWAY WIDTH 13.00 – 15.00 M. , 15.00 M.
AND 20.00 M. SPAN, HEIGHT ≤ 8.00 M.

DESIGNED : D.O.H. & CONSULTANTS	CHECKED : BUREAU OF LOCATION & DESIGN	DATE : OCT 2015
SUBMITTED : (DIRECTOR OF LOCATION & DESIGN BUREAU)		SCALE : AS SHOWN
APPROVED : (FOR DIRECTOR GENERAL)		DWG NO. PC-202
		SHEET NO. 262

REF.	REVISION	SIGNATURE	DATE

D:\std dwg 2015\PC-202(REV00)

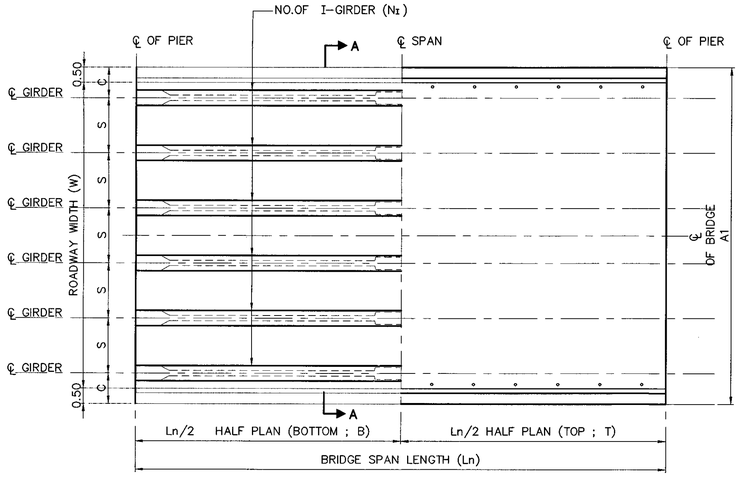

PLAN OF BRIDGE DECK

NOTE :
1. ALL DIMENSIONS SHOWN ARE IN METERS UNLESS OTHERWISE INDICATED
2. LIVE LOADING : VEHICLE LOAD HL-93
3. A MINIMUM ULTIMATE COMPRESSIVE STRENGTH FOR A 150X150X150 MM. CUBE AT 28 DAYS AS FOLLOWS :
   A) FOR COLUMN AND CAP BEAM 35 MPa
   B) FOR FOOTING 35 MPa
4. REBARS SMALLER THAN RB9 MM. SHALL BE TIS 20 GRADE SR 24 PLAIN ROUND BARS, OTHERS SHALL BE TIS 24 GRADE SD40 DEFORMED BARS UNLESS OTHERWISE INDICATED.

1.SPAN LENGTH 15.00 M., 8.00 M. < HEIGHT ≤ 15.00 M.

Ln (M.)	W (M.)	NO.OF I-GIRDER (NI)	DIMENSION (M.)								C		REBAR COLUMN					
			A1	A2	A3	b	e	S	h1	h2	STRAIGHT	CURVED	Dx1.5D(M.)	CR1	CR2	ST3	CR3	ST4
15.00 M. SEISMIC LEVEL 1	9.00	5	10.00	1.30	1.60	1.60	1.40	2.00	1.00	1.50	1.00	1.00-1.25	1.20x1.80	66-DB28	-	DB12@0.15	36-DB28	DB12@0.30
	10.00	6	11.00	1.40	1.80	1.60	1.45	1.80	1.00	1.50	1.00	1.00-1.25	1.30x1.95	60-DB28	-	DB12@0.15	38-DB28	DB12@0.30
	11.00	6	12.00	1.50	2.00	1.60	1.45	2.00	1.00	1.50	1.00	1.00-1.25	1.30x1.95	72-DB28	-	DB12@0.15	40-DB28	DB12@0.30
	12.00	7	13.00	1.60	2.20	1.60	1.45	1.83	1.00	1.50	1.00	1.00-1.25	1.30x1.95	76-DB28	-	DB12@0.15	48-DB28	DB12@0.30
	13.00	7	14.00	1.70	2.30	1.80	1.60	2.00	1.00	1.70	1.00	1.00-1.25	1.40x2.10	72-DB28	-	DB12@0.15	44-DB28	DB12@0.30
	14.00	8	15.00	1.80	2.50	1.80	1.60	1.86	1.00	1.70	1.00	1.00-1.25	1.40x2.10	78-DB28	-	DB12@0.15	52-DB28	DB12@0.30
	15.00	8	16.00	2.00	2.70	1.80	1.60	2.00	1.00	1.70	1.00	1.00-1.25	1.40x2.10	60-DB28	24-DB28	DB12@0.15	60-DB28	DB12@0.30
15.00 M. SEISMIC LEVEL 2	9.00	5	10.00	1.30	1.60	1.60	1.40	2.00	1.00	1.50	1.00	1.00-1.25	1.20x1.80	66-DB28	-	DB12@0.15	36-DB28	DB12@0.30
	10.00	6	11.00	1.40	1.80	1.60	1.45	1.80	1.00	1.50	1.00	1.00-1.25	1.30x1.95	60-DB28	-	DB12@0.15	38-DB28	DB12@0.30
	11.00	6	12.00	1.50	2.00	1.60	1.45	2.00	1.00	1.50	1.00	1.00-1.25	1.30x1.95	72-DB28	-	DB12@0.15	40-DB28	DB12@0.30
	12.00	7	13.00	1.60	2.20	1.60	1.45	1.83	1.00	1.50	1.00	1.00-1.25	1.30x1.95	76-DB28	-	DB12@0.15	48-DB28	DB12@0.30
	13.00	7	14.00	1.70	2.30	1.80	1.60	2.00	1.00	1.70	1.00	1.00-1.25	1.40x2.10	72-DB28	-	DB12@0.15	44-DB28	DB12@0.30
	14.00	8	15.00	1.80	2.50	1.80	1.60	1.86	1.00	1.70	1.00	1.00-1.25	1.40x2.10	78-DB28	-	DB12@0.15	52-DB28	DB12@0.30
	15.00	8	16.00	2.00	2.70	1.80	1.60	2.00	1.00	1.70	1.00	1.00-1.25	1.40x2.10	60-DB28	24-DB28	DB12@0.15	60-DB28	DB12@0.30

Ln (M.)	W (M.)	REBAR CAP BEAM						PILE SIZING, PS (MM.)	Nc1	Nc2	NO.OF PILE	FOOTING SKEW 0°-15°					FOOTING SKEW 16°-45°				
		T1	T2	T3	B1	ST1(STIRRUPS)	ST2(STIRRUPS)					FL	FB	FD	f	g	FL	FB	FD	f	g
15.00 M. SEISMIC LEVEL 1	9.00	16-DB25	16-DB25	-	10-DB20	3-DB12@0.20	4-DB12@0.15	Ø 650x650	5	2	10	10.00	3.25	1.75	2.15	1.95	10.00	3.75	1.75	2.15	2.45
	10.00	15-DB28	15-DB28	-	10-DB20	3-DB12@0.20	4-DB12@0.15	Ø 650x650	5	2	10	11.00	3.25	1.85	2.40	1.95	11.00	3.75	1.85	2.40	2.45
	11.00	18-DB28	18-DB28	-	10-DB20	3-DB12@0.20	4-DB12@0.15	Ø 650x650	6	2	12	12.00	3.25	2.00	2.12	1.95	12.00	3.75	2.00	2.12	2.45
	12.00	15-DB28	15-DB28	15-DB28	10-DB20	3-DB12@0.20	4-DB12@0.15	Ø 650x650	6	2	12	13.00	3.25	2.00	2.32	1.95	13.00	3.75	2.00	2.32	2.45
	13.00	15-DB28	15-DB28	15-DB28	10-DB20	3-DB12@0.20	4-DB12@0.15	Ø 650x650	7	2	14	14.00	3.25	2.20	2.10	1.95	14.00	3.75	2.20	2.10	2.45
	14.00	18-DB28	18-DB28	18-DB28	12-DB20	3-DB12@0.20	4-DB12@0.15	Ø 650x650	7	2	14	15.00	3.25	2.30	2.27	1.95	15.00	3.75	2.30	2.27	2.45
	15.00	20-DB28	20-DB28	20-DB28	12-DB20	3-DB12@0.175	4-DB12@0.125	Ø 650x650	8	2	16	16.00	3.25	2.30	2.09	1.95	16.00	3.75	2.30	2.09	2.45
15.00 M. SEISMIC LEVEL 2	9.00	16-DB25	16-DB25	-	10-DB20	3-DB12@0.20	4-DB12@0.15	Ø 650x650	5	2	10	10.00	3.25	1.75	2.15	1.95	10.00	3.75	1.75	2.15	2.45
	10.00	15-DB28	15-DB28	-	10-DB20	3-DB12@0.20	4-DB12@0.15	Ø 650x650	5	2	10	11.00	3.25	1.85	2.40	1.95	11.00	3.75	1.85	2.40	2.45
	11.00	18-DB28	18-DB28	-	10-DB20	3-DB12@0.20	4-DB12@0.15	Ø 650x650	6	2	12	12.00	3.25	2.00	2.12	1.95	12.00	3.75	2.00	2.12	2.45
	12.00	15-DB28	15-DB28	15-DB28	10-DB20	3-DB12@0.20	4-DB12@0.15	Ø 650x650	6	2	12	13.00	3.25	2.00	2.32	1.95	13.00	3.75	2.00	2.32	2.45
	13.00	15-DB28	15-DB28	15-DB28	10-DB20	3-DB12@0.20	4-DB12@0.15	Ø 650x650	7	2	14	14.00	3.25	2.20	2.10	1.95	14.00	3.75	2.20	2.10	2.45
	14.00	18-DB28	18-DB28	18-DB28	12-DB20	3-DB12@0.20	4-DB12@0.15	Ø 650x650	7	2	14	15.00	3.25	2.30	2.27	1.95	15.00	3.75	2.30	2.27	2.45
	15.00	20-DB28	20-DB28	20-DB28	12-DB20	3-DB12@0.175	4-DB12@0.125	Ø 650x650	8	2	16	16.00	3.25	2.30	2.09	1.95	16.00	3.75	2.30	2.09	2.45

Ln (M.)	W (M.)	BOTTOM REBAR		TOP REBAR	
		BF1	BF2	TF1	TF2
15.00 M. SEISMIC LEVEL 1	9.00	DB28@0.12 **	DB25@0.15	DB20@0.18	DB20@0.18
	10.00	DB28@0.11 **	DB25@0.14	DB20@0.18	DB20@0.18
	11.00	DB28@0.10 **	DB25@0.14	DB20@0.18	DB20@0.18
	12.00	DB28@0.09 **	DB25@0.13	DB20@0.16	DB20@0.16
	13.00	DB28@0.09 **	DB25@0.13	DB20@0.16	DB20@0.16
	14.00	DB32@0.10 **	DB25@0.13	DB20@0.16	DB20@0.16
	15.00	DB32@0.08 **	DB25@0.12	DB20@0.14	DB20@0.14
15.00 M. SEISMIC LEVEL 2	9.00	DB28@0.12 **	DB25@0.15	DB20@0.18	DB20@0.18
	10.00	DB28@0.11 **	DB25@0.14	DB20@0.18	DB20@0.18
	11.00	DB28@0.10 **	DB25@0.14	DB20@0.18	DB20@0.18
	12.00	DB28@0.09 **	DB25@0.13	DB20@0.16	DB20@0.16
	13.00	DB28@0.09 **	DB25@0.13	DB20@0.16	DB20@0.16
	14.00	DB32@0.10 **	DB25@0.13	DB20@0.16	DB20@0.16
	15.00	DB32@0.08 **	DB25@0.12	DB20@0.14	DB20@0.14

REMARK ; ** = 2 LAYERS

ADJUST LENGTH FOR SKEW BRIDGE

VALUE OF SEC θ IN CASE OF SKEW BRIDGE (SKEW, θ)					
SKEW ANGLE, θ (DEGREE)	0	5	10	15	20
SEC θ	1.0000	1.0038	1.0154	1.0353	1.0642
SKEW ANGLE, θ (DEGREE)	25	30	35	40	45
SEC θ	1.1034	1.1547	1.2208	1.3054	1.4142

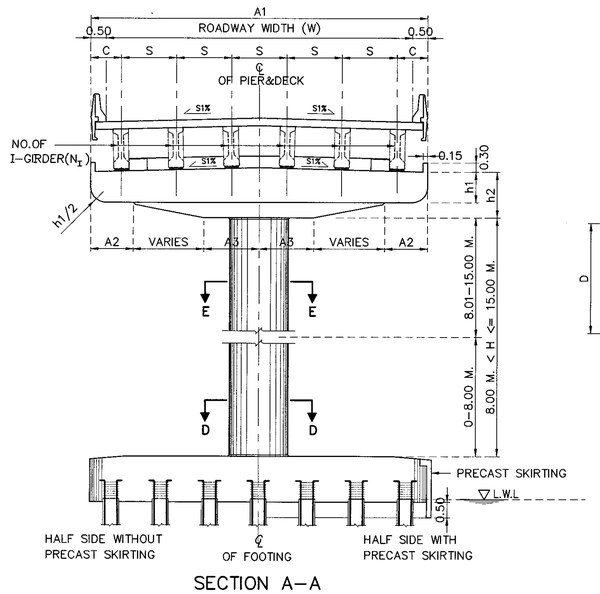

SECTION A-A

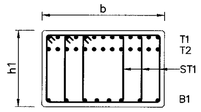

SECTION B-B

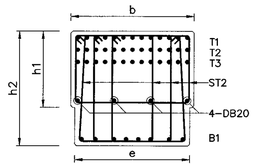

SECTION C-C

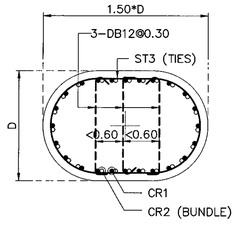

SECTION D-D

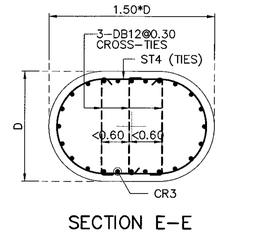

SECTION E-E

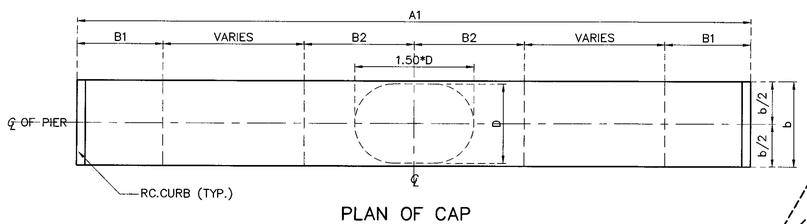

PLAN OF CAP

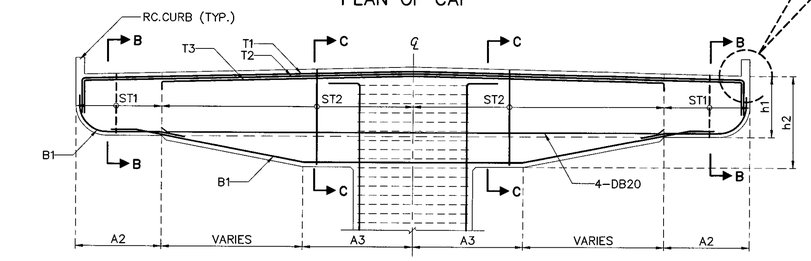

SECTION OF CAP

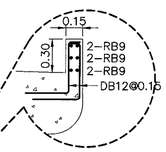

CURB DETAIL

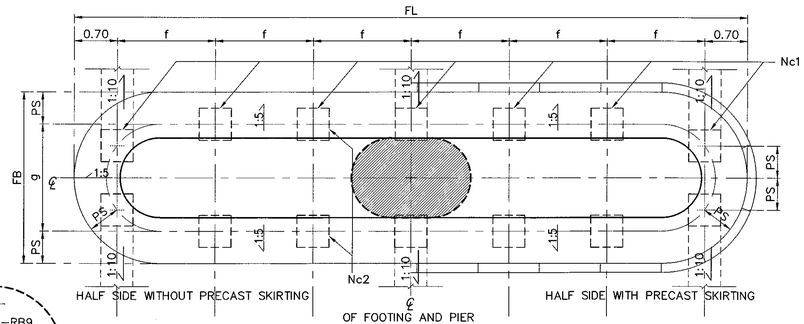

PLAN OF FOOTING

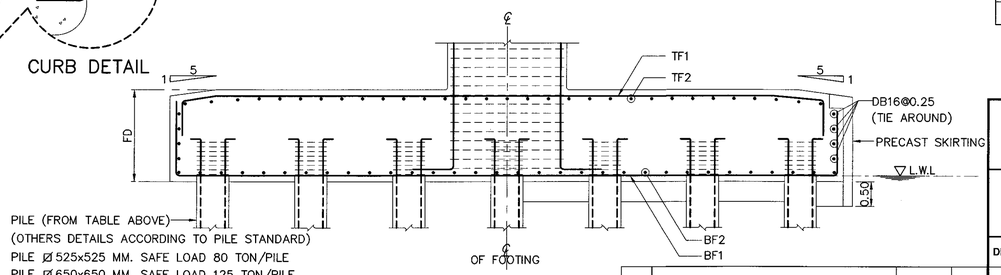

SECTION OF FOOTING

PILE (FROM TABLE ABOVE)
(OTHERS DETAILS ACCORDING TO PILE STANDARD)
PILE Ø 525x525 MM. SAFE LOAD 80 TON/PILE
PILE Ø 650x650 MM. SAFE LOAD 125 TON/PILE

REF.	REVISION	SIGNATURE	DATE

KINGDOM OF THAILAND

MINISTRY OF TRANSPORT
DEPARTMENT OF HIGHWAYS

STANDARD DRAWING

SINGLE COLUMN PIER WITHOUT SIDEWALK (FOR I-GIRDER)
ROADWAY WIDTH 9.00 - 15.00 M., 15.00 M. SPAN,
8.00 M. < HEIGHT ≤ 15.00 M.

DESIGNED : D.O.H. & CONSULTANTS	CHECKED : BUREAU OF LOCATION & DESIGN	DATE : OCT 2015
SUBMITTED : (DIRECTOR OF LOCATION & DESIGN BUREAU)		SCALE : AS SHOWN
APPROVED : (FOR DIRECTOR GENERAL)		DWG NO. PC-203
		SHEET NO. 263

D:\std dwg 2015\PC-203(REV00)

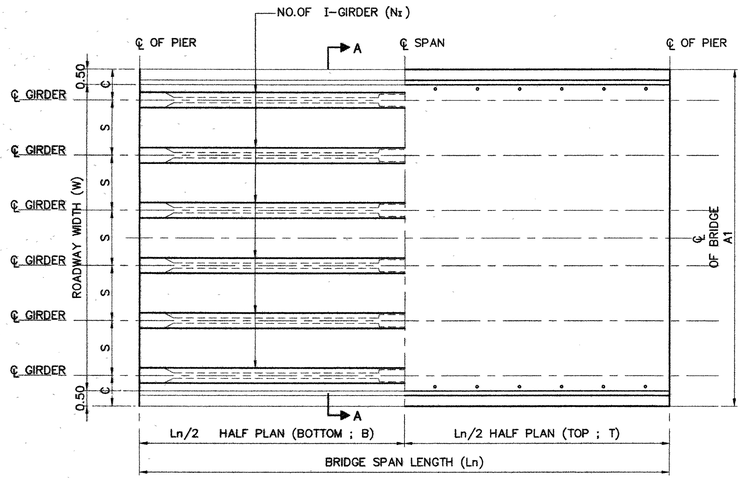

PLAN OF BRIDGE DECK

NOTE :
1. ALL DIMENSIONS SHOWN ARE IN METERS UNLESS OTHERWISE INDICATED
2. LIVE LOADING : VEHICLE LOAD HL-93
3. A MINIMUM ULTIMATE COMPRESSIVE STRENGTH FOR A 150X150X150 MM. CUBE AT 28 DAYS AS FOLLOWS :
   A) FOR COLUMN AND CAP BEAM 35 MPa
   B) FOR FOOTING 35 MPa
4. REBARS SMALLER THAN RB9 MM. SHALL BE TIS 20 GRADE SR 24 PLAIN ROUND BARS, OTHERS SHALL BE TIS 24 GRADE SD40 DEFORMED BARS UNLESS OTHERWISE INDICATED.

1.SPAN LENGTH 20.00 M., 8.00 M. < HEIGHT ≤ 15.00 M.

Ln (M.)	W (M.)	NO.OF I-GIRDER (N_I)	DIMENSION (M.)								C		REBAR COLUMN					
			A1	A2	A3	b	e	S	h1	h2	STRAIGHT	CURVED	Dx1.5D(M.)	CR1	CR2	ST3	CR3	ST4
20.00 M. SEISMIC LEVEL 1	9.00	5	10.00	1.30	1.60	1.60	1.45	2.00	1.00	1.50	1.00	1.00–1.50	1.30x1.95	52–DB28	–	DB12@0.15	38–DB28	DB12@0.30
	10.00	6	11.00	1.40	1.80	1.60	1.45	1.80	1.00	1.50	1.00	1.00–1.50	1.30x1.95	60–DB28	–	DB12@0.15	40–DB28	DB12@0.30
	11.00	6	12.00	1.50	2.00	1.60	1.45	2.00	1.00	1.50	1.00	1.00–1.50	1.30x1.95	74–DB28	–	DB12@0.15	46–DB28	DB12@0.30
	12.00	7	13.00	1.60	2.20	1.60	1.45	1.83	1.00	1.50	1.00	1.00–1.50	1.40x2.10	68–DB28	–	DB12@0.15	46–DB28	DB12@0.30
	13.00	7	14.00	1.70	2.30	1.80	1.65	2.00	1.00	1.70	1.00	1.00–1.50	1.50x2.25	56–DB28	–	DB12@0.15	50–DB28	DB12@0.30
	14.00	8	15.00	1.80	2.50	1.80	1.65	1.86	1.00	1.70	1.00	1.00–1.50	1.50x2.25	62–DB28	–	DB12@0.15	52–DB28	DB12@0.30
	15.00	8	16.00	2.00	2.70	1.80	1.65	2.00	1.00	1.70	1.00	1.00–1.50	1.50x2.25	72–DB28	–	DB12@0.15	52–DB28	DB12@0.30
20.00 M. SEISMIC LEVEL 2	9.00	5	10.00	1.30	1.60	1.60	1.45	2.00	1.00	1.50	1.00	1.00–1.50	1.30x1.95	66–DB28	–	DB12@0.15	38–DB28	DB12@0.30
	10.00	6	11.00	1.40	1.80	1.60	1.45	1.80	1.00	1.50	1.00	1.00–1.50	1.30x1.95	42–DB28	42–DB28	DB12@0.15	42–DB28	DB12@0.30
	11.00	6	12.00	1.50	2.00	1.60	1.45	2.00	1.00	1.50	1.00	1.00–1.50	1.30x1.95	46–DB28	46–DB28	DB12@0.15	46–DB28	DB12@0.30
	12.00	7	13.00	1.60	2.20	1.60	1.45	1.83	1.00	1.50	1.00	1.00–1.50	1.40x2.10	46–DB28	46–DB28	DB12@0.15	46–DB28	DB12@0.30
	13.00	7	14.00	1.70	2.30	1.80	1.65	2.00	1.00	1.70	1.00	1.00–1.50	1.50x2.25	76–DB28	–	DB12@0.15	50–DB28	DB12@0.30
	14.00	8	15.00	1.80	2.50	1.80	1.65	1.86	1.00	1.70	1.00	1.00–1.50	1.50x2.25	52–DB28	40–DB28	DB12@0.15	52–DB28	DB12@0.30
	15.00	8	16.00	2.00	2.70	1.80	1.65	2.00	1.00	1.70	1.00	1.00–1.50	1.50x2.25	52–DB28	42–DB28	DB12@0.15	52–DB28	DB12@0.30

Ln (M.)	W (M.)	REBAR CAP BEAM						PILE SIZING, PS (MM.)	Nc1	Nc2	NO.OF PILE	FOOTING SKEW 0°–15°					FOOTING SKEW 16°–45°				
		T1	T2	T3	B1	ST1(STIRRUPS)	ST2(STIRRUPS)					FL	FB	FD	f	g	FL	FB	FD	f	g
20.00 M. SEISMIC LEVEL 1	9.00	18–DB25	18–DB25	–	10–DB20	3–DB12@0.20	4–DB12@0.15	Ø 650x650	5	2	10	10.00	3.25	1.75	2.15	1.95	10.00	3.75	1.75	2.15	2.45
	10.00	18–DB28	18–DB28	–	10–DB20	3–DB12@0.20	4–DB12@0.15	Ø 650x650	6	2	12	12.00	3.25	1.85	2.12	1.95	12.00	3.75	1.85	2.12	2.45
	11.00	15–DB28	15–DB28	15–DB28	12–DB20	3–DB12@0.175	4–DB12@0.125	Ø 650x650	6	2	12	12.00	3.25	2.00	2.12	1.95	12.00	3.75	2.00	2.12	2.45
	12.00	19–DB28	19–DB28	19–DB28	12–DB20	3–DB12@0.15	4–DB12@0.125	Ø 650x650	7	2	14	14.00	3.25	2.00	2.10	1.95	14.00	3.75	2.00	2.10	2.45
	13.00	18–DB28	18–DB28	18–DB28	12–DB20	3–DB12@0.175	4–DB12@0.15	Ø 650x650	7	2	14	14.00	3.25	2.00	2.10	1.95	14.00	3.75	2.00	2.10	2.45
	14.00	21–DB28	21–DB28	21–DB28	12–DB20	3–DB12@0.175	4–DB12@0.15	Ø 650x650	8	2	16	16.00	3.25	2.30	2.09	1.95	16.00	3.75	2.30	2.09	2.45
	15.00	24–DB28	24–DB28	24–DB28	12–DB20	3–DB12@0.15	4–DB12@0.15	Ø 650x650	8	2	16	16.00	3.25	2.30	2.09	1.95	16.00	3.75	2.30	2.09	2.45
20.00 M. SEISMIC LEVEL 2	9.00	18–DB28	18–DB28	–	10–DB20	3–DB12@0.20	4–DB12@0.15	Ø 650x650	5	2	10	10.00	3.25	1.75	2.15	1.95	10.00	3.75	1.75	2.15	2.45
	10.00	18–DB28	18–DB28	–	10–DB20	3–DB12@0.20	4–DB12@0.15	Ø 650x650	6	2	12	12.00	3.25	1.85	2.12	1.95	12.00	3.75	1.85	2.12	2.45
	11.00	15–DB28	15–DB28	15–DB28	12–DB20	3–DB12@0.175	4–DB12@0.125	Ø 650x650	6	2	12	12.00	3.25	2.00	2.12	1.95	12.00	3.75	2.00	2.12	2.45
	12.00	19–DB28	19–DB28	19–DB28	12–DB20	3–DB12@0.15	4–DB12@0.125	Ø 650x650	7	2	14	14.00	3.25	2.00	2.10	1.95	14.00	3.75	2.00	2.10	2.45
	13.00	18–DB28	18–DB28	18–DB28	12–DB20	3–DB12@0.175	4–DB12@0.15	Ø 650x650	7	2	14	14.00	3.25	2.00	2.10	1.95	14.00	3.75	2.00	2.10	2.45
	14.00	21–DB28	21–DB28	21–DB28	12–DB20	3–DB12@0.175	4–DB12@0.15	Ø 650x650	8	2	16	16.00	3.25	2.30	2.09	1.95	16.00	3.75	2.30	2.09	2.45
	15.00	24–DB28	24–DB28	24–DB28	12–DB20	3–DB12@0.15	4–DB12@0.15	Ø 650x650	8	2	16	16.00	3.25	2.30	2.09	1.95	16.00	3.75	2.30	2.09	2.45

Ln (M.)	W (M.)	BOTTOM REBAR		TOP REBAR	
		BF1	BF2	TF1	TF2
20.00 M. SEISMIC LEVEL 1	9.00	DB28@0.11 **	DB25@0.15	DB20@0.18	DB20@0.18
	10.00	DB28@0.09 **	DB25@0.14	DB20@0.18	DB20@0.18
	11.00	DB32@0.12 **	DB25@0.14	DB20@0.18	DB20@0.18
	12.00	DB32@0.09 **	DB25@0.13	DB20@0.16	DB20@0.16
	13.00	DB32@0.09 **	DB25@0.13	DB20@0.16	DB20@0.16
	14.00	DB32@0.08 **	DB25@0.12	DB20@0.14	DB20@0.14
	15.00	DB32@0.08 **	DB25@0.12	DB20@0.14	DB20@0.14
20.00 M. SEISMIC LEVEL 2	9.00	DB28@0.11 **	DB25@0.15	DB20@0.18	DB20@0.18
	10.00	DB28@0.09 **	DB25@0.14	DB20@0.18	DB20@0.18
	11.00	DB32@0.12 **	DB25@0.14	DB20@0.18	DB20@0.18
	12.00	DB32@0.09 **	DB25@0.13	DB20@0.16	DB20@0.16
	13.00	DB32@0.09 **	DB25@0.13	DB20@0.16	DB20@0.16
	14.00	DB32@0.08 **	DB25@0.12	DB20@0.14	DB20@0.14
	15.00	DB32@0.08 **	DB25@0.12	DB20@0.14	DB20@0.14

REMARK ; ** = 2 LAYERS

ADJUST LENGTH FOR SKEW BRIDGE

VALUE OF SEC θ IN CASE OF SKEW BRIDGE (SKEW, θ)					
SKEW ANGLE, θ (DEGREE)	0	5	10	15	20
SEC θ	1.0000	1.0038	1.0154	1.0353	1.0642
SKEW ANGLE, θ (DEGREE)	25	30	35	40	45
SEC θ	1.1034	1.1547	1.2208	1.3054	1.4142

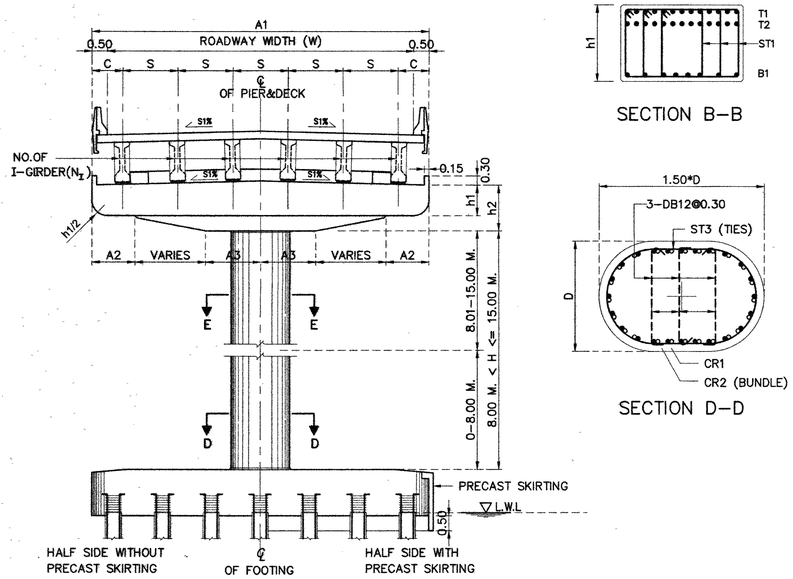

SECTION A–A

SECTION B–B

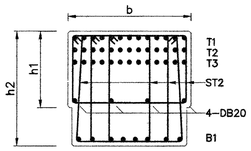

SECTION C–C

SECTION D–D

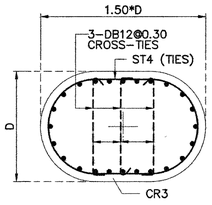

SECTION E–E

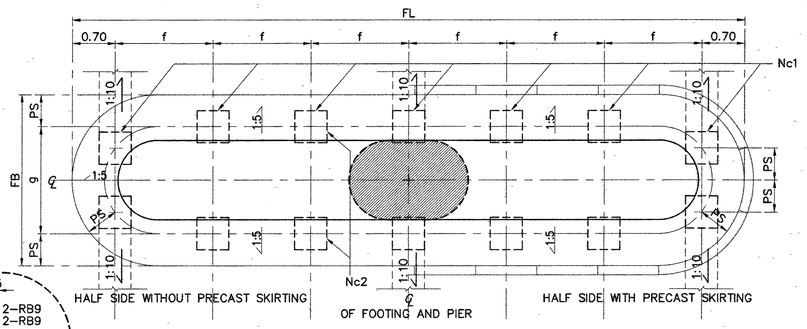

PLAN OF FOOTING

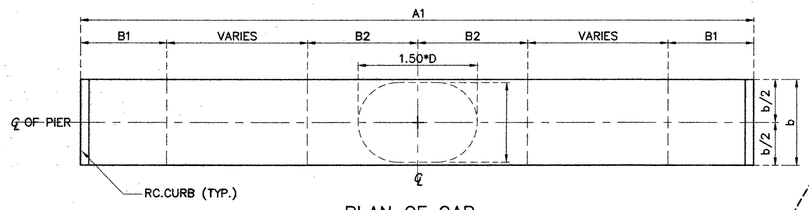

PLAN OF CAP

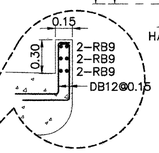

CURB DETAIL

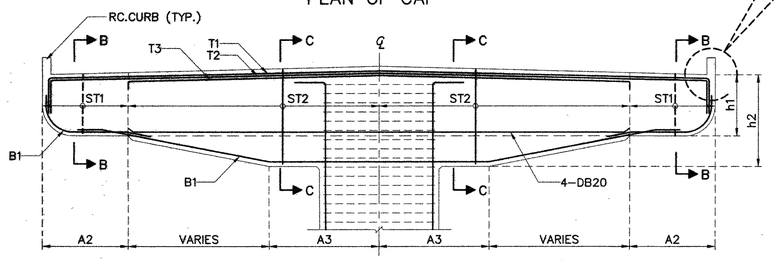

SECTION OF CAP

PILE (FROM TABLE ABOVE)
(OTHERS DETAILS ACCORDING TO PILE STANDARD)
PILE Ø 525x525 MM. SAFE LOAD 80 TON/PILE
PILE Ø 650x650 MM. SAFE LOAD 125 TON/PILE

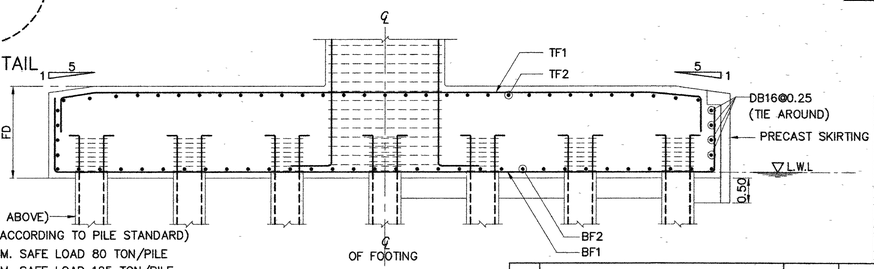

SECTION OF FOOTING

KINGDOM OF THAILAND

MINISTRY OF TRANSPORT

DEPARTMENT OF HIGHWAYS

STANDARD DRAWING

SINGLE COLUMN PIER WITHOUT SIDEWALK (FOR I-GIRDER)
ROADWAY WIDTH 9.00 – 15.00 M., 20.00 M. SPAN,
8.00 M. < HEIGHT ≤ 15.00 M.

DESIGNED : D.O.H. & CONSULTANTS	CHECKED : BUREAU OF LOCATION & DESIGN	DATE : OCT 2015
SUBMITTED : (DIRECTOR OF LOCATION & DESIGN BUREAU)		SCALE : AS SHOWN
APPROVED : (FOR DIRECTOR GENERAL)		DWG NO. PC–204
		SHEET NO. 264

REF.	REVISION	SIGNATURE	DATE

D:\STANDARD FINAL-CAD(APRIL2016)\STRUCTURAL WORK\Structural Work-Sec 1 Bridge Span Not More Than 20.00 M\PC-204(REV00)

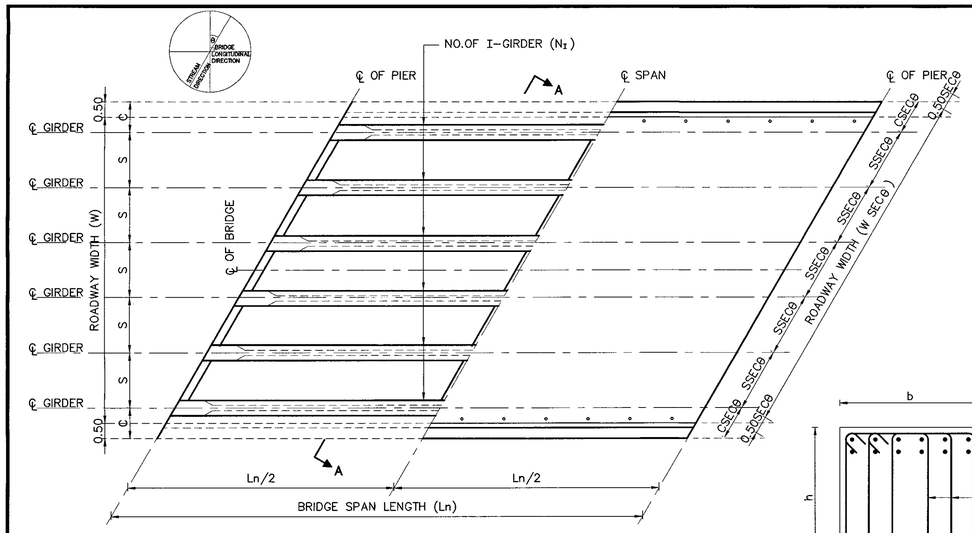

PLAN OF BRIDGE DECK

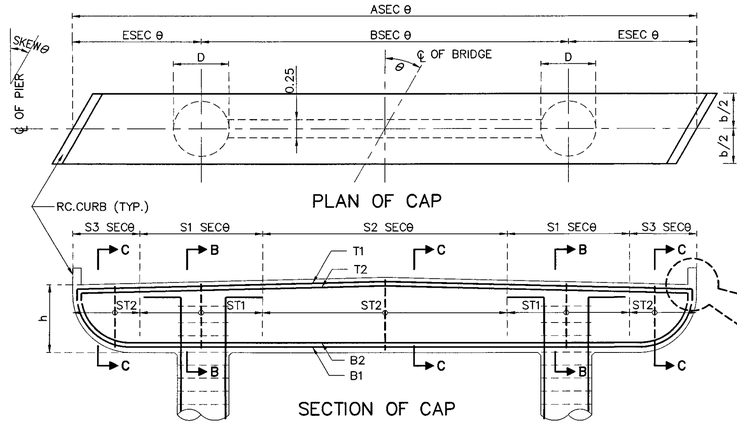

PLAN OF CAP

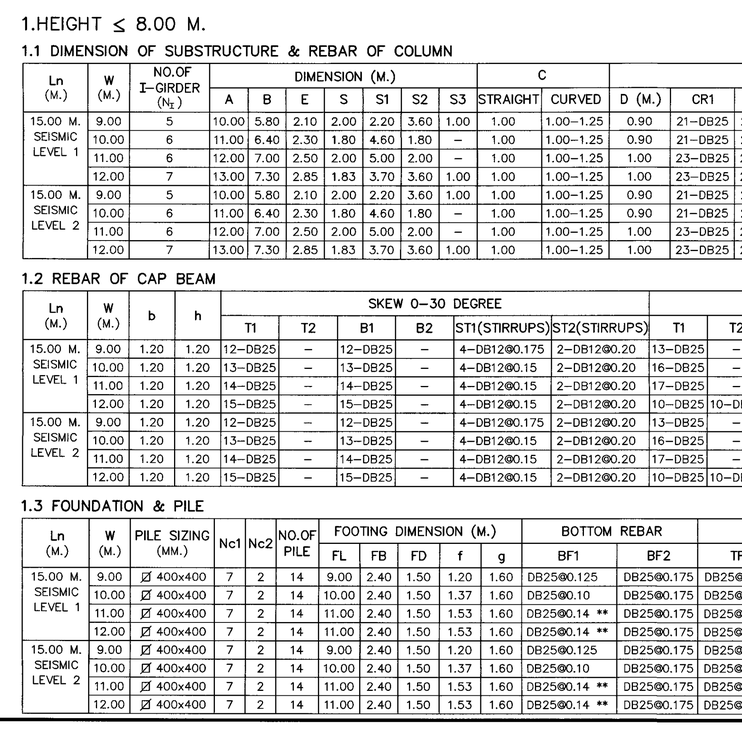

SECTION OF CAP

SECTION B–B

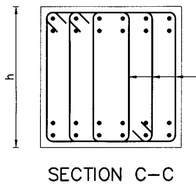

SECTION C–C

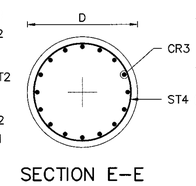

SECTION E–E

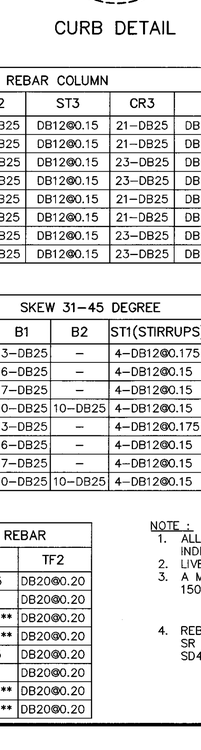

CURB DETAIL

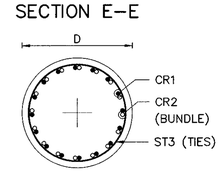

SECTION D–D

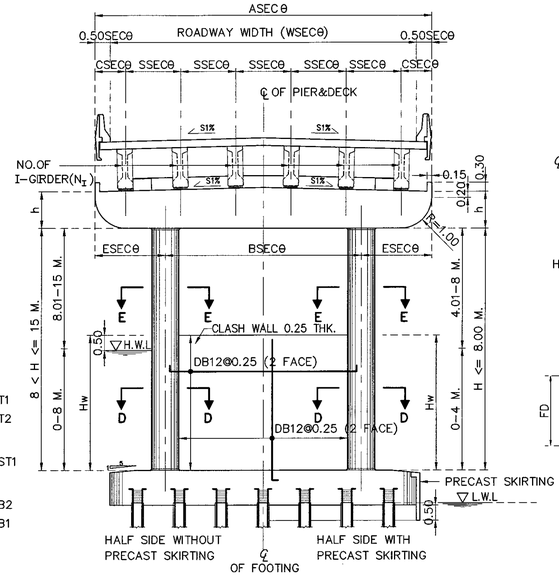

SECTION A–A

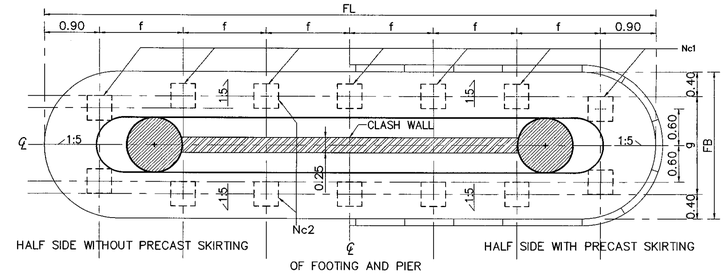

PLAN OF FOOTING

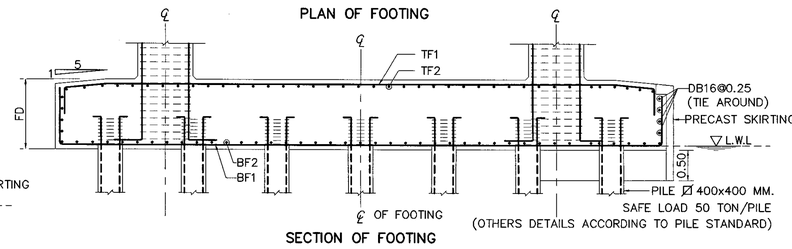

SECTION OF FOOTING

ADJUST LENGTH FOR SKEW BRIDGE

VALUE OF SECθ IN CASE OF SKEW BRIDGE (SKEW, θ)										
SKEW ANGLE, θ (DEGREE)	0	5	10	15	20	25	30	35	40	45
SEC θ	1.0000	1.0038	1.0154	1.0353	1.0642	1.1034	1.1547	1.2208	1.3054	1.4142

1.HEIGHT ≤ 8.00 M.

1.1 DIMENSION OF SUBSTRUCTURE & REBAR OF COLUMN

Ln (M.)	W (M.)	NO.OF I-GIRDER (N_I)	DIMENSION (M.)							C		REBAR COLUMN					
			A	B	E	S	S1	S2	S3	STRAIGHT	CURVED	D (M.)	CR1	CR2	ST3	CR3	ST4
15.00 M. SEISMIC LEVEL 1	9.00	5	10.00	5.80	2.10	2.00	2.20	3.60	1.00	1.00	1.00–1.25	0.90	21–DB25	21–DB25	DB12@0.15	21–DB25	DB12@0.30
	10.00	6	11.00	6.40	2.30	1.80	4.60	1.80	–	1.00	1.00–1.25	0.90	21–DB25	21–DB25	DB12@0.15	21–DB25	DB12@0.30
	11.00	6	12.00	7.00	2.50	2.00	5.00	2.00	–	1.00	1.00–1.25	1.00	23–DB25	23–DB25	DB12@0.15	23–DB25	DB12@0.30
	12.00	7	13.00	7.30	2.85	1.83	3.70	3.60	1.00	1.00	1.00–1.25	1.00	23–DB25	23–DB25	DB12@0.15	23–DB25	DB12@0.30
15.00 M. SEISMIC LEVEL 2	9.00	5	10.00	5.80	2.10	2.00	2.20	3.60	1.00	1.00	1.00–1.25	0.90	21–DB25	21–DB25	DB12@0.15	21–DB25	DB12@0.30
	10.00	6	11.00	6.40	2.30	1.80	4.60	1.80	–	1.00	1.00–1.25	0.90	21–DB25	21–DB25	DB12@0.15	21–DB25	DB12@0.30
	11.00	6	12.00	7.00	2.50	2.00	5.00	2.00	–	1.00	1.00–1.25	1.00	23–DB25	23–DB25	DB12@0.15	23–DB25	DB12@0.30
	12.00	7	13.00	7.30	2.85	1.83	3.70	3.60	1.00	1.00	1.00–1.25	1.00	23–DB25	23–DB25	DB12@0.15	23–DB25	DB12@0.30

1.2 REBAR OF CAP BEAM

Ln (M.)	W (M.)	b	h	SKEW 0–30 DEGREE						SKEW 31–45 DEGREE					
				T1	T2	B1	B2	ST1(STIRRUPS)	ST2(STIRRUPS)	T1	T2	B1	B2	ST1(STIRRUPS)	ST2(STIRRUPS)
15.00 M. SEISMIC LEVEL 1	9.00	1.20	1.20	12–DB25	–	12–DB25	–	4–DB12@0.175	2–DB12@0.20	13–DB25	–	13–DB25	–	4–DB12@0.175	2–DB12@0.20
	10.00	1.20	1.20	13–DB25	–	13–DB25	–	4–DB12@0.15	2–DB12@0.20	16–DB25	–	16–DB25	–	4–DB12@0.15	2–DB12@0.20
	11.00	1.20	1.20	14–DB25	–	14–DB25	–	4–DB12@0.15	2–DB12@0.20	17–DB25	–	17–DB25	–	4–DB12@0.15	2–DB12@0.20
	12.00	1.20	1.20	15–DB25	–	15–DB25	–	4–DB12@0.15	2–DB12@0.20	10–DB25	10–DB25	10–DB25	10–DB25	4–DB12@0.15	2–DB12@0.20
15.00 M. SEISMIC LEVEL 2	9.00	1.20	1.20	12–DB25	–	12–DB25	–	4–DB12@0.175	2–DB12@0.20	13–DB25	–	13–DB25	–	4–DB12@0.175	2–DB12@0.20
	10.00	1.20	1.20	13–DB25	–	13–DB25	–	4–DB12@0.15	2–DB12@0.20	16–DB25	–	16–DB25	–	4–DB12@0.15	2–DB12@0.20
	11.00	1.20	1.20	14–DB25	–	14–DB25	–	4–DB12@0.15	2–DB12@0.20	17–DB25	–	17–DB25	–	4–DB12@0.15	2–DB12@0.20
	12.00	1.20	1.20	15–DB25	–	15–DB25	–	4–DB12@0.15	2–DB12@0.20	10–DB25	10–DB25	10–DB25	10–DB25	4–DB12@0.15	2–DB12@0.20

1.3 FOUNDATION & PILE

Ln (M.)	W (M.)	PILE SIZING (MM.)	Nc1	Nc2	NO.OF PILE	FOOTING DIMENSION (M.)					BOTTOM REBAR		TOP REBAR	
						FL	FB	FD	f	g	BF1	BF2	TF1	TF2
15.00 M. SEISMIC LEVEL 1	9.00	Ø 400x400	7	2	14	9.00	2.40	1.50	1.20	1.60	DB25@0.125	DB25@0.175	DB25@0.125	DB20@0.20
	10.00	Ø 400x400	7	2	14	10.00	2.40	1.50	1.37	1.60	DB25@0.10	DB25@0.175	DB25@0.10	DB20@0.20
	11.00	Ø 400x400	7	2	14	11.00	2.40	1.50	1.53	1.60	DB25@0.14 **	DB25@0.175	DB25@0.14 **	DB20@0.20
	12.00	Ø 400x400	7	2	14	11.00	2.40	1.50	1.53	1.60	DB25@0.14 **	DB25@0.175	DB25@0.14 **	DB20@0.20
15.00 M. SEISMIC LEVEL 2	9.00	Ø 400x400	7	2	14	9.00	2.40	1.50	1.20	1.60	DB25@0.125	DB25@0.175	DB25@0.125	DB20@0.20
	10.00	Ø 400x400	7	2	14	10.00	2.40	1.50	1.37	1.60	DB25@0.10	DB25@0.175	DB25@0.10	DB20@0.20
	11.00	Ø 400x400	7	2	14	11.00	2.40	1.50	1.53	1.60	DB25@0.14 **	DB25@0.175	DB25@0.14 **	DB20@0.20
	12.00	Ø 400x400	7	2	14	11.00	2.40	1.50	1.53	1.60	DB25@0.14 **	DB25@0.175	DB25@0.14 **	DB20@0.20

2. 8.00 M. < HEIGHT ≤ 15.00 M.

2.1 DIMENSION OF SUBSTRUCTURE & REBAR OF COLUMN

Ln (M.)	W (M.)	NO.OF I-GIRDER (N_I)	DIMENSION (M.)							C		REBAR COLUMN					
			A	B	E	S	S1	S2	S3	STRAIGHT	CURVED	D (M.)	CR1	CR2	ST3	CR3	ST4
15.00 M. SEISMIC LEVEL 1	9.00	5	10.00	5.80	2.10	2.00	2.20	3.60	1.00	1.00	1.00–1.25	1.10	27–DB25	27–DB25	DB12@0.15	27–DB25	DB12@0.30
	10.00	6	11.00	6.40	2.30	1.80	4.60	1.80	–	1.00	1.00–1.25	1.10	27–DB25	27–DB25	DB12@0.15	27–DB25	DB12@0.30
	11.00	6	12.00	7.00	2.50	2.00	5.00	2.00	–	1.00	1.00–1.25	1.20	30–DB25	30–DB25	DB12@0.15	30–DB25	DB12@0.30
	12.00	7	13.00	7.30	2.85	1.83	3.70	3.60	1.00	1.00	1.00–1.25	1.20	30–DB25	30–DB25	DB12@0.15	30–DB25	DB12@0.30
15.00 M. SEISMIC LEVEL 2	9.00	5	10.00	5.80	2.10	2.00	2.20	3.60	1.00	1.00	1.00–1.25	1.10	27–DB25	27–DB25	DB12@0.15	27–DB25	DB12@0.30
	10.00	6	11.00	6.40	2.30	1.80	4.60	1.80	–	1.00	1.00–1.25	1.10	27–DB25	27–DB25	DB12@0.15	27–DB25	DB12@0.30
	11.00	6	12.00	7.00	2.50	2.00	5.00	2.00	–	1.00	1.00–1.25	1.20	30–DB25	30–DB25	DB12@0.15	30–DB25	DB12@0.30
	12.00	7	13.00	7.30	2.85	1.83	3.70	3.60	1.00	1.00	1.00–1.25	1.20	30–DB25	30–DB25	DB12@0.15	30–DB25	DB12@0.30

2.2 REBAR OF CAP BEAM

Ln (M.)	W (M.)	b	h	SKEW 0–30 DEGREE						SKEW 31–45 DEGREE					
				T1	T2	B1	B2	ST1(STIRRUPS)	ST2(STIRRUPS)	T1	T2	B1	B2	ST1(STIRRUPS)	ST2(STIRRUPS)
15.00 M. SEISMIC LEVEL 1	9.00	1.30	1.20	12–DB25	–	12–DB25	–	4–DB12@0.15	2–DB12@0.20	13–DB25	–	13–DB25	–	4–DB12@0.15	2–DB12@0.20
	10.00	1.30	1.20	13–DB25	–	13–DB25	–	4–DB12@0.15	2–DB12@0.20	16–DB25	–	16–DB25	–	4–DB12@0.15	2–DB12@0.20
	11.00	1.40	1.20	14–DB25	–	14–DB25	–	4–DB12@0.15	2–DB12@0.20	18–DB25	–	18–DB25	–	4–DB12@0.15	2–DB12@0.20
	12.00	1.40	1.20	16–DB25	–	16–DB25	–	4–DB12@0.15	2–DB12@0.20	11–DB25	11–DB25	11–DB25	11–DB25	4–DB12@0.15	2–DB12@0.20
15.00 M. SEISMIC LEVEL 2	9.00	1.30	1.20	13–DB25	–	13–DB25	–	4–DB12@0.15	2–DB12@0.20	13–DB25	–	13–DB25	–	4–DB12@0.15	2–DB12@0.20
	10.00	1.30	1.20	14–DB25	–	14–DB25	–	4–DB12@0.15	2–DB12@0.20	16–DB25	–	16–DB25	–	4–DB12@0.15	2–DB12@0.20
	11.00	1.40	1.20	14–DB25	–	14–DB25	–	4–DB12@0.15	2–DB12@0.20	18–DB25	–	18–DB25	–	4–DB12@0.15	2–DB12@0.20
	12.00	1.40	1.20	16–DB25	–	16–DB25	–	4–DB12@0.15	2–DB12@0.20	11–DB25	11–DB25	11–DB25	11–DB25	4–DB12@0.15	2–DB12@0.20

2.3 FOUNDATION & PILE

Ln (M.)	W (M.)	PILE SIZING (MM.)	Nc1	Nc2	NO.OF PILE	FOOTING DIMENSION (M.)					BOTTOM REBAR		TOP REBAR	
						FL	FB	FD	f	g	BF1	BF2	TF1	TF2
15.00 M. SEISMIC LEVEL 1	9.00	Ø 400x400	7	2	14	9.00	2.60	1.50	1.20	1.80	DB25@0.175 **	DB25@0.175	DB25@0.175 **	DB20@0.20
	10.00	Ø 400x400	7	2	14	11.00	2.60	1.50	1.53	1.80	DB25@0.175 **	DB25@0.175	DB25@0.175 **	DB20@0.20
	11.00	Ø 400x400	8	2	16	11.00	2.60	1.50	1.31	1.80	DB25@0.14 **	DB25@0.175	DB25@0.14 **	DB20@0.20
	12.00	Ø 400x400	8	2	16	12.00	2.60	1.50	1.46	1.80	DB25@0.14 **	DB25@0.175	DB25@0.14 **	DB20@0.20
15.00 M. SEISMIC LEVEL 2	9.00	Ø 400x400	7	2	14	9.00	2.60	1.50	1.20	1.80	DB25@0.175 **	DB25@0.175	DB25@0.175 **	DB20@0.20
	10.00	Ø 400x400	7	2	14	11.00	2.60	1.50	1.53	1.80	DB25@0.175 **	DB25@0.175	DB25@0.175 **	DB20@0.20
	11.00	Ø 400x400	8	2	16	11.00	2.60	1.50	1.31	1.80	DB25@0.14 **	DB25@0.175	DB25@0.14 **	DB20@0.20
	12.00	Ø 400x400	8	2	16	12.00	2.60	1.50	1.46	1.80	DB25@0.14 **	DB25@0.175	DB25@0.14 **	DB20@0.20

REMARK ; ** = 2 LAYERS

NOTE :
1. ALL DIMENSIONS SHOWN ARE IN METERS UNLESS OTHERWISE INDICATED
2. LIVE LOADING : VEHICLE LOAD HL–93
3. A MINIMUM ULTIMATE COMPRESSIVE STRENGTH FOR A 150X150X150 MM. CUBE AT 28 DAYS AS FOLLOWS :
   A) FOR COLUMN AND CAP BEAM 35 MPa
   B) FOR FOOTING 35 MPa
4. REBARS SMALLER THAN RB9 MM. SHALL BE TIS 20 GRADE SR 24 PLAIN ROUND BARS, OTHERS SHALL BE TIS 24 GRADE SD40 DEFORMED BARS UNLESS OTHERWISE INDICATED.

REF.	REVISION	SIGNATURE	DATE

KINGDOM OF THAILAND

MINISTRY OF TRANSPORT
DEPARTMENT OF HIGHWAYS

STANDARD DRAWING

TWO COLUMNS PIER WITHOUT SIDEWALK (FOR I–GIRDER)
ROADWAY WIDTH 9.00 – 12.00 M., 15.00 M. SPAN,
HEIGHT ≤ 15.00 M.

DESIGNED : D.O.H. & CONSULTANTS
CHECKED : BUREAU OF LOCATION & DESIGN
DATE : OCT 2015
SUBMITTED : (DIRECTOR OF LOCATION & DESIGN BUREAU)
SCALE : AS SHOWN
APPROVED : (FOR DIRECTOR GENERAL)
DWG NO. PC–205
SHEET NO. 265

D:\std dwg 2015\PC–205(REVISED)

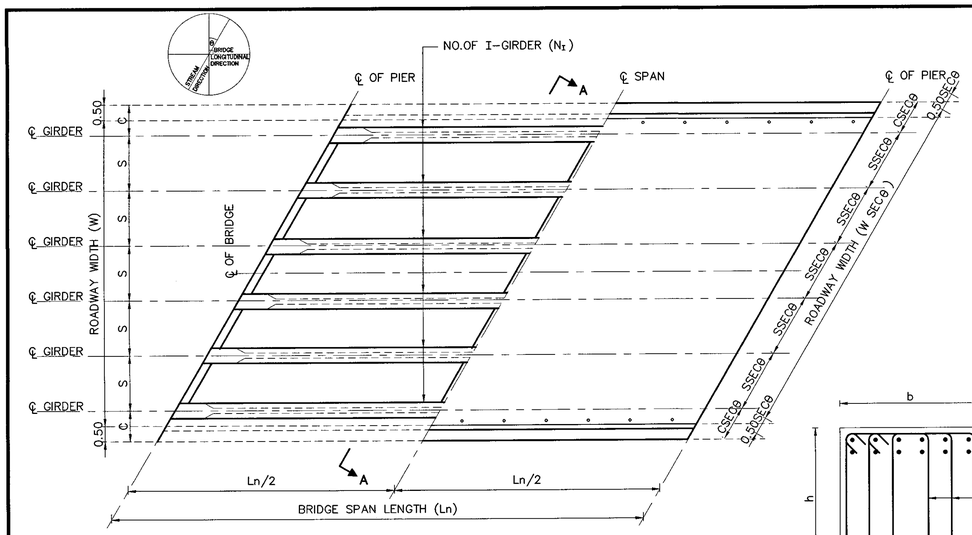

PLAN OF BRIDGE DECK

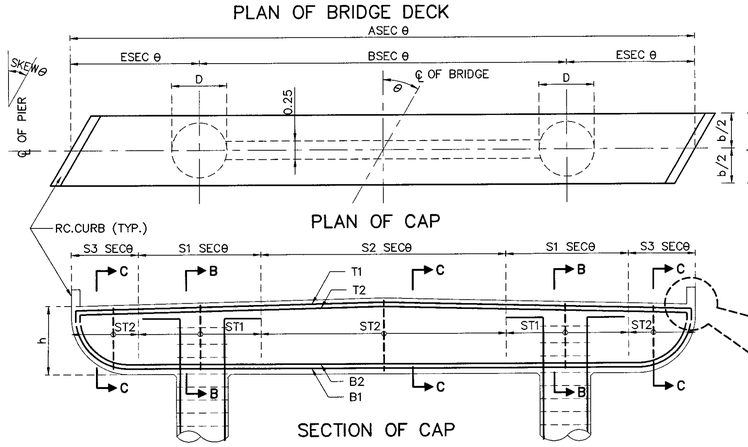

PLAN OF CAP

SECTION B–B

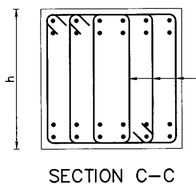

SECTION C–C

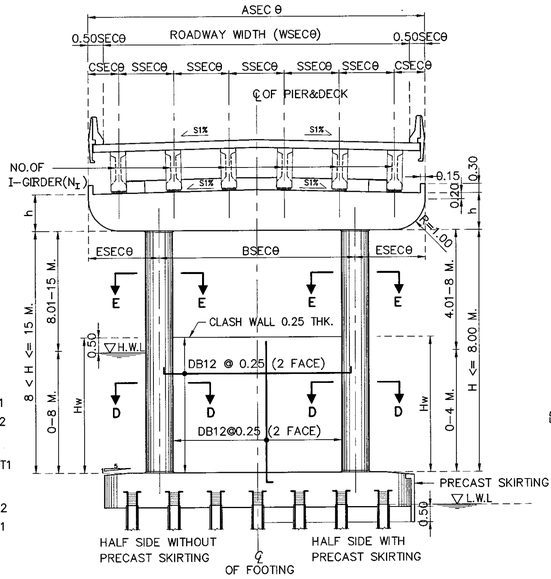

SECTION A–A

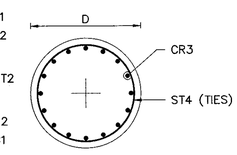

SECTION E–E

SECTION OF CAP

CURB DETAIL

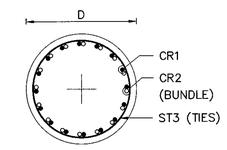

SECTION D–D

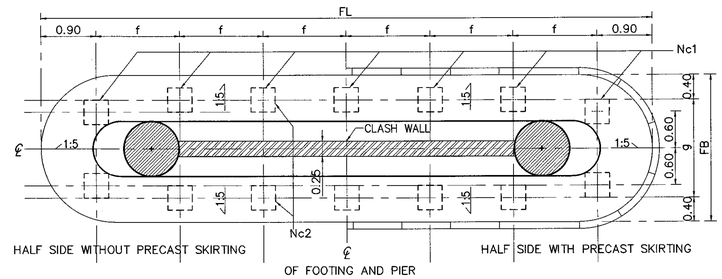

PLAN OF FOOTING

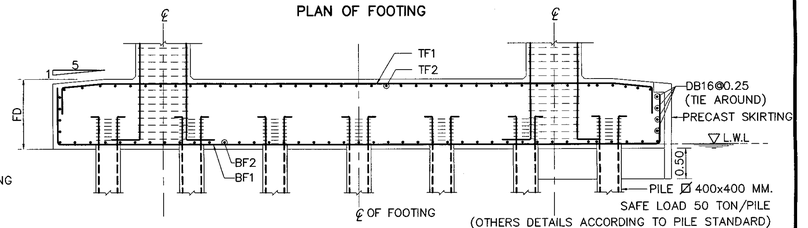

SECTION OF FOOTING

ADJUST LENGTH FOR SKEW BRIDGE

VALUE OF SECθ IN CASE OF SKEW BRIDGE (SKEW, θ)										
SKEW ANGLE, θ (DEGREE)	0	5	10	15	20	25	30	35	40	45
SEC θ	1.0000	1.0038	1.0154	1.0353	1.0642	1.1034	1.1547	1.2208	1.3054	1.4142

1.HEIGHT ≤ 8.00 M.

1.1 DIMENSION OF SUBSTRUCTURE & REBAR OF COLUMN

Ln (M.)	W (M.)	NO.OF I-GIRDER (N_I)	DIMENSION (M.)							C		REBAR COLUMN					
			A	B	E	S	S1	S2	S3	STRAIGHT	CURVED	D (M.)	CR1	CR2	ST3	CR3	ST4
20.00 M. SEISMIC LEVEL 1	9.00	5	10.00	5.80	2.10	2.00	2.20	3.60	1.00	1.00	1.00–1.50	0.90	23–DB25	23–DB25	DB12@0.15	23–DB25	DB12@0.30
	10.00	6	11.00	6.40	2.30	1.80	4.60	1.80	–	1.00	1.00–1.50	0.90	24–DB25	24–DB25	DB12@0.15	24–DB25	DB12@0.30
	11.00	6	12.00	7.00	2.50	2.00	5.00	2.00	–	1.00	1.00–1.50	1.00	25–DB25	25–DB25	DB12@0.15	25–DB25	DB12@0.30
	12.00	7	13.00	7.30	2.85	1.83	3.70	3.60	1.00	1.00	1.00–1.50	1.00	26–DB25	26–DB25	DB12@0.15	26–DB25	DB12@0.30
20.00 M. SEISMIC LEVEL 2	9.00	5	10.00	5.80	2.10	2.00	2.20	3.60	1.00	1.00	1.00–1.50	0.90	23–DB25	23–DB25	DB12@0.15	23–DB25	DB12@0.30
	10.00	6	11.00	6.40	2.30	1.80	4.60	1.80	–	1.00	1.00–1.50	0.90	24–DB25	24–DB25	DB12@0.15	24–DB25	DB12@0.30
	11.00	6	12.00	7.00	2.50	2.00	5.00	2.00	–	1.00	1.00–1.50	1.00	25–DB25	25–DB25	DB12@0.15	25–DB25	DB12@0.30
	12.00	7	13.00	7.30	2.85	1.83	3.70	3.60	1.00	1.00	1.00–1.50	1.00	26–DB25	26–DB25	DB12@0.15	26–DB25	DB12@0.30

1.2 REBAR OF CAP BEAM

Ln (M.)	W (M.)	b	h	SKEW 0–30 DEGREE						SKEW 31–45 DEGREE					
				T1	T2	B1	B2	ST1(STIRRUPS)	ST2(STIRRUPS)	T1	T2	B1	B2	ST1(STIRRUPS)	ST2(STIRRUPS)
20.00 M. SEISMIC LEVEL 1	9.00	1.20	1.20	13–DB25	–	13–DB25	–	4–DB12@0.15	2–DB12@0.20	14–DB25	–	14–DB25	–	4–DB12@0.15	2–DB12@0.20
	10.00	1.20	1.20	14–DB25	–	14–DB25	–	4–DB12@0.15	2–DB12@0.20	9–DB25	9–DB25	9–DB25	9–DB25	4–DB12@0.15	2–DB12@0.20
	11.00	1.20	1.20	15–DB25	–	15–DB25	–	4–DB12@0.15	2–DB12@0.20	10–DB25	10–DB25	10–DB25	10–DB25	4–DB12@0.15	2–DB12@0.20
	12.00	1.20	1.20	10–DB25	10–DB25	10–DB25	10–DB25	4–DB12@0.15	2–DB12@0.20	12–DB25	12–DB25	12–DB25	12–DB25	4–DB12@0.15	2–DB12@0.20
20.00 M. SEISMIC LEVEL 2	9.00	1.20	1.20	13–DB25	–	13–DB25	–	4–DB12@0.15	2–DB12@0.20	14–DB25	–	14–DB25	–	4–DB12@0.15	2–DB12@0.20
	10.00	1.20	1.20	14–DB25	–	14–DB25	–	4–DB12@0.15	2–DB12@0.20	9–DB25	9–DB25	9–DB25	9–DB25	4–DB12@0.15	2–DB12@0.20
	11.00	1.20	1.20	15–DB25	–	15–DB25	–	4–DB12@0.15	2–DB12@0.20	10–DB25	10–DB25	10–DB25	10–DB25	4–DB12@0.15	2–DB12@0.20
	12.00	1.20	1.20	10–DB25	10–DB25	10–DB25	10–DB25	4–DB12@0.15	2–DB12@0.20	13–DB25	13–DB25	13–DB25	13–DB25	4–DB12@0.15	2–DB12@0.20

1.3 FOUNDATION & PILE

Ln (M.)	W (M.)	PILE SIZING (MM.)	Nc1	Nc2	NO.OF PILE	FOOTING DIMENSION (M.)					BOTTOM REBAR		TOP REBAR	
						FL	FB	FD	f	g	BF1	BF2	TF1	TF2
20.00 M. SEISMIC LEVEL 1	9.00	Ø 400x400	7	2	14	9.00	2.40	1.50	1.20	1.60	DB25@0.15 **	DB25@0.175	DB25@0.15 **	DB20@0.20
	10.00	Ø 400x400	7	2	14	10.00	2.40	1.50	1.37	1.60	DB28@0.15 **	DB25@0.175	DB28@0.15 **	DB20@0.20
	11.00	Ø 400x400	7	2	14	11.00	2.40	1.50	1.53	1.60	DB28@0.15 **	DB25@0.175	DB28@0.15 **	DB20@0.20
	12.00	Ø 400x400	7	2	14	11.00	2.40	1.50	1.53	1.60	DB28@0.125 **	DB25@0.175	DB28@0.125 **	DB20@0.20
20.00 M. SEISMIC LEVEL 2	9.00	Ø 400x400	7	2	14	9.00	2.40	1.50	1.20	1.60	DB25@0.15 **	DB25@0.175	DB25@0.15 **	DB20@0.20
	10.00	Ø 400x400	7	2	14	10.00	2.40	1.50	1.37	1.60	DB28@0.15 **	DB25@0.175	DB28@0.15 **	DB20@0.20
	11.00	Ø 400x400	7	2	14	11.00	2.40	1.50	1.53	1.60	DB28@0.15 **	DB25@0.175	DB28@0.15 **	DB20@0.20
	12.00	Ø 400x400	7	2	14	11.00	2.40	1.50	1.53	1.60	DB28@0.125 **	DB25@0.175	DB28@0.125 **	DB20@0.20

2. 8.00 M. < HEIGHT ≤ 15.00 M.

2.1 DIMENSION OF SUBSTRUCTURE & REBAR OF COLUMN

Ln (M.)	W (M.)	NO.OF I-GIRDER (N_I)	DIMENSION (M.)							C		REBAR COLUMN					
			A	B	E	S	S1	S2	S3	STRAIGHT	CURVED	D (M.)	CR1	CR2	ST3	CR3	ST4
20.00 M. SEISMIC LEVEL 1	9.00	5	10.00	5.80	2.10	2.00	2.20	3.60	1.00	1.00	1.00–1.50	1.10	26–DB25	26–DB25	DB12@0.15	26–DB25	DB12@0.30
	10.00	6	11.00	6.40	2.30	1.80	4.60	1.80	–	1.00	1.00–1.50	1.10	27–DB25	26–DB25	DB12@0.15	27–DB25	DB12@0.30
	11.00	6	12.00	7.00	2.50	2.00	5.00	2.00	–	1.00	1.00–1.50	1.20	30–DB25	30–DB25	DB12@0.15	30–DB25	DB12@0.30
	12.00	7	13.00	7.30	2.85	1.83	3.70	3.60	1.00	1.00	1.00–1.50	1.20	30–DB25	30–DB25	DB12@0.15	30–DB25	DB12@0.30
20.00 M. SEISMIC LEVEL 2	9.00	5	10.00	5.80	2.10	2.00	2.20	3.60	1.00	1.00	1.00–1.50	1.10	28–DB25	28–DB25	DB12@0.15	28–DB25	DB12@0.30
	10.00	6	11.00	6.40	2.30	1.80	4.60	1.80	–	1.00	1.00–1.50	1.10	31–DB25	31–DB25	DB12@0.15	31–DB25	DB12@0.30
	11.00	6	12.00	7.00	2.50	2.00	5.00	2.00	–	1.00	1.00–1.50	1.20	31–DB25	28–DB25	DB12@0.15	31–DB25	DB12@0.30
	12.00	7	13.00	7.30	2.85	1.83	3.70	3.60	1.00	1.00	1.00–1.50	1.20	32–DB25	32–DB25	DB12@0.15	32–DB25	DB12@0.30

2.2 REBAR OF CAP BEAM

Ln (M.)	W (M.)	b	h	SKEW 0–30 DEGREE						SKEW 31–45 DEGREE					
				T1	T2	B1	B2	ST1(STIRRUPS)	ST2(STIRRUPS)	T1	T2	B1	B2	ST1(STIRRUPS)	ST2(STIRRUPS)
20.00 M. SEISMIC LEVEL 1	9.00	1.30	1.20	14–DB25	–	14–DB25	–	4–DB12@0.15	2–DB12@0.20	14–DB25	–	14–DB25	–	4–DB12@0.15	2–DB12@0.20
	10.00	1.30	1.20	17–DB25	–	17–DB25	–	4–DB12@0.15	2–DB12@0.20	18–DB25	–	18–DB25	–	4–DB12@0.15	2–DB12@0.20
	11.00	1.40	1.20	17–DB25	–	17–DB25	–	4–DB12@0.15	2–DB12@0.20	10–DB25	10–DB25	10–DB25	10–DB25	4–DB12@0.15	2–DB12@0.20
	12.00	1.40	1.20	10–DB25	10–DB25	10–DB25	10–DB25	4–DB12@0.15	2–DB12@0.20	12–DB25	12–DB25	12–DB25	12–DB25	4–DB12@0.15	2–DB12@0.20
20.00 M. SEISMIC LEVEL 2	9.00	1.30	1.20	14–DB25	–	14–DB25	–	4–DB12@0.15	2–DB12@0.20	14–DB25	–	14–DB25	–	4–DB12@0.15	2–DB12@0.20
	10.00	1.30	1.20	17–DB25	–	17–DB25	–	4–DB12@0.15	2–DB12@0.20	18–DB25	–	18–DB25	–	4–DB12@0.15	2–DB12@0.20
	11.00	1.40	1.20	17–DB25	–	17–DB25	–	4–DB12@0.15	2–DB12@0.20	10–DB25	10–DB25	10–DB25	10–DB25	4–DB12@0.15	2–DB12@0.20
	12.00	1.40	1.20	10–DB25	10–DB25	10–DB25	10–DB25	4–DB12@0.15	2–DB12@0.20	12–DB25	12–DB25	12–DB25	12–DB25	4–DB12@0.15	2–DB12@0.20

2.3 FOUNDATION & PILE

Ln (M.)	W (M.)	PILE SIZING (MM.)	Nc1	Nc2	NO.OF PILE	FOOTING DIMENSION (M.)					BOTTOM REBAR		TOP REBAR	
						FL	FB	FD	f	g	BF1	BF2	TF1	TF2
20.00 M. SEISMIC LEVEL 1	9.00	Ø 400x400	7	2	14	9.00	2.60	1.50	1.20	1.80	DB25@0.15 **	DB25@0.175	DB25@0.15 **	DB20@0.20
	10.00	Ø 400x400	8	2	16	11.00	2.60	1.50	1.31	1.80	DB28@0.15 **	DB25@0.175	DB28@0.15 **	DB20@0.20
	11.00	Ø 400x400	8	2	16	11.00	2.60	1.50	1.31	1.80	DB28@0.15 **	DB25@0.175	DB28@0.15 **	DB20@0.20
	12.00	Ø 400x400	9	2	18	12.00	2.60	1.50	1.28	1.80	DB28@0.125 **	DB25@0.175	DB28@0.125 **	DB20@0.20
20.00 M. SEISMIC LEVEL 2	9.00	Ø 400x400	7	2	14	9.00	2.60	1.50	1.20	1.80	DB25@0.15 **	DB25@0.175	DB25@0.15 **	DB20@0.20
	10.00	Ø 400x400	8	2	16	11.00	2.60	1.50	1.31	1.80	DB28@0.15 **	DB25@0.175	DB28@0.15 **	DB20@0.20
	11.00	Ø 400x400	8	2	16	11.00	2.60	1.50	1.31	1.80	DB28@0.15 **	DB25@0.175	DB28@0.15 **	DB20@0.20
	12.00	Ø 400x400	9	2	18	12.00	2.60	1.50	1.28	1.80	DB28@0.125 **	DB25@0.175	DB28@0.125 **	DB20@0.20

REMARK ; ** = 2 LAYERS

NOTE :
1. ALL DIMENSIONS SHOWN ARE IN METERS UNLESS OTHERWISE INDICATED
2. LIVE LOADING : VEHICLE LOAD HL–93
3. A MINIMUM ULTIMATE COMPRESSIVE STRENGTH FOR A 150X150X150 MM. CUBE AT 28 DAYS AS FOLLOWS :
   A) FOR COLUMN AND CAP BEAM 35 MPa
   B) FOR FOOTING 35 MPa
4. REBARS SMALLER THAN RB9 MM. SHALL BE TIS 20 GRADE SR 24 PLAIN ROUND BARS, OTHERS SHALL BE TIS 24 GRADE SD40 DEFORMED BARS UNLESS OTHERWISE INDICATED.

REF.	REVISION	SIGNATURE	DATE

KINGDOM OF THAILAND

MINISTRY OF TRANSPORT

DEPARTMENT OF HIGHWAYS

STANDARD DRAWING

TWO COLUMNS PIER WITHOUT SIDEWALK (FOR I-GIRDER)
ROADWAY WIDTH 9.00 – 12.00 M., 20.00 M. SPAN,
HEIGHT ≤ 15.00 M.

DESIGNED : D.O.H. & CONSULTANTS | CHECKED : BUREAU OF LOCATION & DESIGN | DATE : OCT 2015

SUBMITTED : (DIRECTOR OF LOCATION & DESIGN BUREAU) | SCALE : AS SHOWN

APPROVED : (FOR DIRECTOR GENERAL) | DWG NO. PC–206

SHEET NO. 266

D:\std dwg 2015\PC-206(REV00)

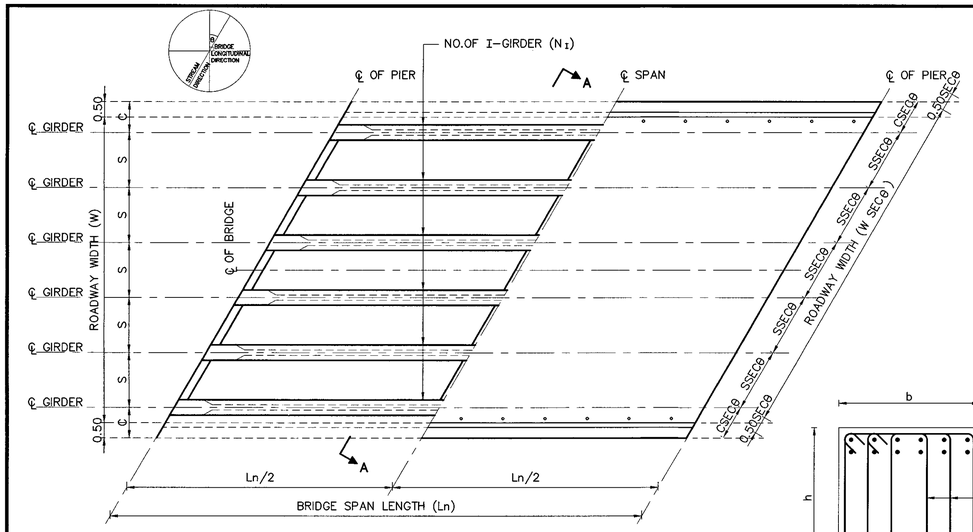

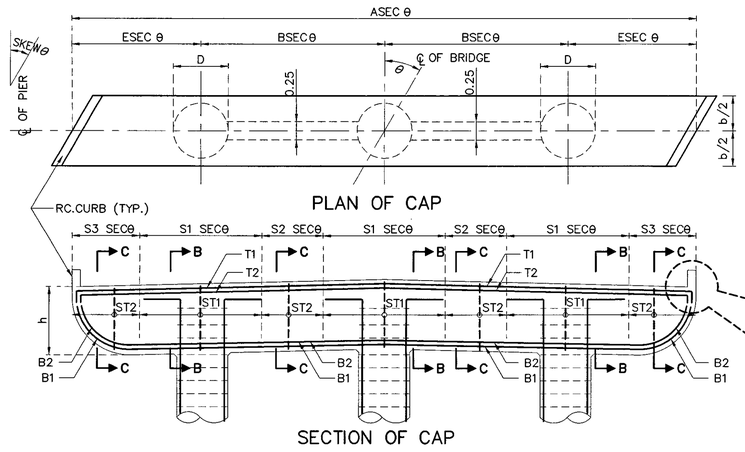

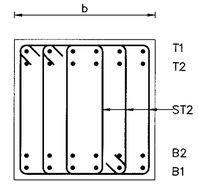

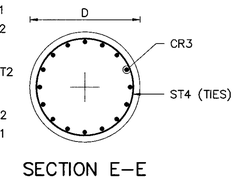

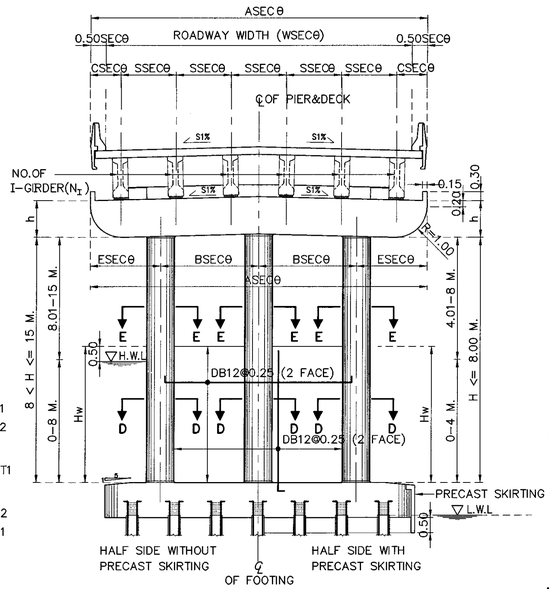

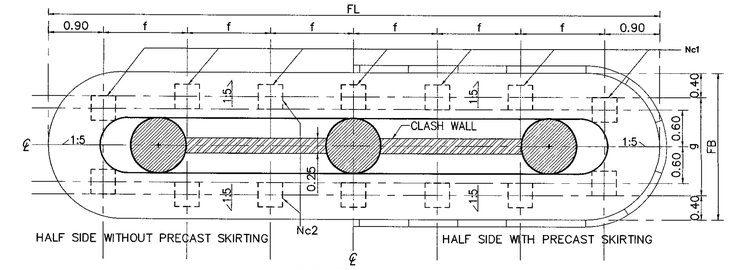

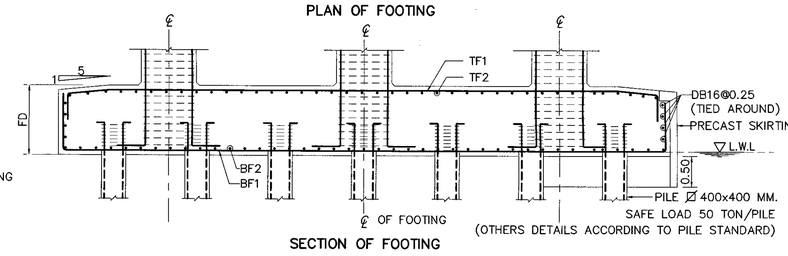

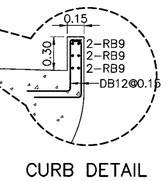

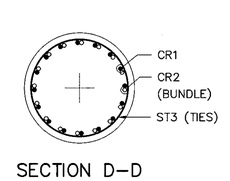

ADJUST LENGTH FOR SKEW BRIDGE

VALUE OF SEC θ IN CASE OF SKEW BRIDGE (SKEW, θ)										
SKEW ANGLE, θ (DEGREE)	0	5	10	15	20	25	30	35	40	45
SEC θ	1.0000	1.0038	1.0154	1.0353	1.0642	1.1034	1.1547	1.2208	1.3054	1.4142

1.HEIGHT ≤ 8.00 M.

1.1 DIMENSION OF SUBSTRUCTURE & REBAR OF COLUMN

Ln (M.)	W (M.)	NO.OF I-GIRDER (N_I)	DIMENSION (M.)							C		REBAR COLUMN					
			A	B	E	S	S1	S2	S3	STRAIGHT	CURVED	D (M.)	CR1	CR2	ST3	CR3	ST4
15.00 M. SEISMIC LEVEL 1	13.00	7	14.00	5.10	1.90	2.00	3.80	1.30	–	1.00	1.00–1.25	0.80	25–DB25	25–DB25	DB12@0.15	25–DB25	DB12@0.30
	14.00	8	15.00	5.30	2.20	1.86	2.40	2.90	1.00	1.00	1.00–1.25	0.80	26–DB25	26–DB25	DB12@0.15	26–DB25	DB12@0.30
	15.00	8	16.00	5.70	2.30	2.00	2.60	3.10	1.00	1.00	1.00–1.25	0.80	28–DB25	28–DB25	DB12@0.15	22–DB28	DB12@0.30
15.00 M. SEISMIC LEVEL 2	13.00	7	14.00	5.10	1.90	2.00	3.80	1.30	–	1.00	1.00–1.25	0.80	25–DB25	25–DB25	DB12@0.15	25–DB25	DB12@0.30
	14.00	8	15.00	5.30	2.20	1.86	2.40	2.90	1.00	1.00	1.00–1.25	0.80	26–DB25	26–DB25	DB12@0.15	26–DB25	DB12@0.30
	15.00	8	16.00	5.70	2.30	2.00	2.60	3.10	1.00	1.00	1.00–1.25	0.80	28–DB25	28–DB25	DB12@0.15	22–DB28	DB12@0.30

1.2 REBAR OF CAP BEAM

Ln (M.)	W (M.)	b	h	SKEW 0–30						SKEW 31–45					
				T1	T2	B1	B2	ST1(STIRRUPS)	ST2(STIRRUPS)	T1	T2	B1	B2	ST1(STIRRUPS)	ST2(STIRRUPS)
15.00 M. SEISMIC LEVEL 1	13.00	1.00	0.80	11–DB25	–	11–DB25	–	5–DB12@0.15	5–DB12@0.20	11–DB25	–	11–DB25	–	5–DB12@0.15	5–DB12@0.20
	14.00	1.00	0.80	13–DB25	–	13–DB25	–	5–DB12@0.15	4–DB12@0.30	13–DB25	–	13–DB25	–	5–DB12@0.15	4–DB12@0.30
	15.00	1.00	0.80	14–DB25	–	14–DB25	–	6–DB12@0.15	4–DB12@0.30	14–DB25	–	14–DB25	–	6–DB12@0.15	4–DB12@0.30
15.00 M. SEISMIC LEVEL 2	13.00	1.00	0.80	11–DB25	–	11–DB25	–	5–DB12@0.15	5–DB12@0.20	11–DB25	–	11–DB25	–	5–DB12@0.15	5–DB12@0.20
	14.00	1.00	0.80	13–DB25	–	13–DB25	–	5–DB12@0.15	4–DB12@0.30	13–DB25	–	13–DB25	–	5–DB12@0.15	4–DB12@0.30
	15.00	1.00	0.80	14–DB25	–	14–DB25	–	6–DB12@0.15	4–DB12@0.30	14–DB25	–	14–DB25	–	6–DB12@0.15	4–DB12@0.30

1.3 FOUNDATION & PILE

Ln (M.)	W (M.)	PILE SIZING (MM.)	Nc1	Nc2	NO.OF PILE	FOOTING DIMENSION (M.)					BOTTOM REBAR		TOP REBAR	
						FL	FB	FD	f	g	BF1	BF2	TF1	TF2
15.00 M. SEISMIC LEVEL 1	13.00	☒ 400x400	7	2	14	14.00	2.40	1.20	2.03	1.60	DB25@0.17	DB25@0.20	DB25@0.17	DB20@0.25
	14.00	☒ 400x400	7	2	14	14.00	2.40	1.20	2.03	1.60	DB25@0.14	DB25@0.20	DB25@0.14	DB20@0.25
	15.00	☒ 400x400	7	2	14	15.00	2.40	1.20	2.20	1.60	DB25@0.13	DB25@0.20	DB25@0.13	DB20@0.25
15.00 M. SEISMIC LEVEL 2	13.00	☒ 400x400	7	2	14	14.00	2.40	1.20	2.03	1.60	DB25@0.17	DB25@0.20	DB25@0.17	DB20@0.25
	14.00	☒ 400x400	7	2	14	14.00	2.40	1.20	2.03	1.60	DB25@0.14	DB25@0.20	DB25@0.14	DB20@0.25
	15.00	☒ 400x400	7	2	14	15.00	2.40	1.20	2.20	1.60	DB25@0.13	DB25@0.20	DB25@0.13	DB20@0.25

2. 8.00 M. < HEIGHT ≤ 15.00 M.

2.1 DIMENSION OF SUBSTRUCTURE & REBAR OF COLUMN

Ln (M.)	W (M.)	NO.OF I-GIRDER (N_I)	DIMENSION (M.)							C		REBAR COLUMN					
			A	B	E	S	S1	S2	S3	STRAIGHT	CURVED	D (M.)	CR1	CR2	ST3	CR3	ST4
15.00 M. SEISMIC LEVEL 1	13.00	7	14.00	5.10	1.90	2.00	3.80	1.30	–	1.00	1.00–1.25	1.00	29–DB25	27–DB25	DB12@0.15	29–DB25	DB12@0.30
	14.00	8	15.00	5.30	2.20	1.86	2.40	2.90	1.00	1.00	1.00–1.25	1.00	29–DB25	27–DB25	DB12@0.15	29–DB25	DB12@0.30
	15.00	8	16.00	5.70	2.30	2.00	2.60	3.10	1.00	1.00	1.00–1.25	1.00	29–DB25	27–DB25	DB12@0.15	29–DB25	DB12@0.30
15.00 M. SEISMIC LEVEL 2	13.00	7	14.00	5.10	1.90	2.00	3.80	1.30	–	1.00	1.00–1.25	1.00	29–DB25	27–DB25	DB12@0.15	29–DB25	DB12@0.30
	14.00	8	15.00	5.30	2.20	1.86	2.40	2.90	1.00	1.00	1.00–1.25	1.00	29–DB25	27–DB25	DB12@0.15	29–DB25	DB12@0.30
	15.00	8	16.00	5.70	2.30	2.00	2.60	3.10	1.00	1.00	1.00–1.25	1.00	29–DB25	27–DB25	DB12@0.15	29–DB25	DB12@0.30

2.2 REBAR OF CAP BEAM

Ln (M.)	W (M.)	b	h	SKEW 0–30						SKEW 31–45					
				T1	T2	B1	B2	ST1(STIRRUPS)	ST2(STIRRUPS)	T1	T2	B1	B2	ST1(STIRRUPS)	ST2(STIRRUPS)
15.00 M. SEISMIC LEVEL 1	13.00	1.20	1.00	10–DB25	–	10–DB25	–	4–DB12@0.15	4–DB12@0.30	10–DB25	–	10–DB25	–	4–DB12@0.15	4–DB12@0.30
	14.00	1.20	1.00	11–DB25	–	11–DB25	–	4–DB12@0.15	4–DB12@0.30	11–DB25	–	11–DB25	–	4–DB12@0.15	4–DB12@0.30
	15.00	1.20	1.00	12–DB25	–	12–DB25	–	4–DB12@0.15	4–DB12@0.30	12–DB25	–	12–DB25	–	4–DB12@0.15	4–DB12@0.30
15.00 M. SEISMIC LEVEL 2	13.00	1.20	1.00	10–DB25	–	10–DB25	–	4–DB12@0.15	4–DB12@0.30	10–DB25	–	10–DB25	–	4–DB12@0.15	4–DB12@0.30
	14.00	1.20	1.00	11–DB25	–	11–DB25	–	4–DB12@0.15	4–DB12@0.30	11–DB25	–	11–DB25	–	4–DB12@0.15	4–DB12@0.30
	15.00	1.20	1.00	12–DB25	–	12–DB25	–	4–DB12@0.15	4–DB12@0.30	12–DB25	–	12–DB25	–	4–DB12@0.15	4–DB12@0.30

2.3 FOUNDATION & PILE

Ln (M.)	W (M.)	PILE SIZING (MM.)	Nc1	Nc2	NO.OF PILE	FOOTING DIMENSION (M.)					BOTTOM REBAR		TOP REBAR	
						FL	FB	FD	f	g	BF1	BF2	TF1	TF2
15.00 M. SEISMIC LEVEL 1	13.00	☒ 400x400	8	2	16	14.00	2.60	1.20	1.74	1.80	DB25@0.15	DB25@0.20	DB25@0.15	DB20@0.25
	14.00	☒ 400x400	8	2	16	14.00	2.60	1.20	1.74	1.80	DB25@0.14	DB25@0.20	DB25@0.14	DB20@0.25
	15.00	☒ 400x400	8	2	16	15.00	2.60	1.20	1.89	1.80	DB25@0.12	DB25@0.20	DB25@0.12	DB20@0.25
15.00 M. SEISMIC LEVEL 2	13.00	☒ 400x400	8	2	16	14.00	2.60	1.20	1.74	1.80	DB25@0.15	DB25@0.20	DB25@0.15	DB20@0.25
	14.00	☒ 400x400	8	2	16	14.00	2.60	1.20	1.74	1.80	DB25@0.14	DB25@0.20	DB25@0.14	DB20@0.25
	15.00	☒ 400x400	8	2	16	15.00	2.60	1.20	1.89	1.80	DB25@0.12	DB25@0.20	DB25@0.12	DB20@0.25

NOTE :
1. ALL DIMENSIONS SHOWN ARE IN METERS UNLESS OTHERWISE INDICATED
2. LIVE LOADING : VEHICLE LOAD HL–93
3. A MINIMUM ULTIMATE COMPRESSIVE STRENGTH FOR A 150X150X150 MM. CUBE AT 28 DAYS AS FOLLOWS :
   A) FOR COLUMN AND CAP BEAM 35 MPa
   B) FOR FOOTING 35 MPa
4. REBARS SMALLER THAN RB9 MM. SHALL BE TIS 20 GRADE SR 24 PLAIN ROUND BARS, OTHERS SHALL BE TIS 24 GRADE SD40 DEFORMED BARS UNLESS OTHERWISE INDICATED.

REF.	REVISION	SIGNATURE	DATE

KINGDOM OF THAILAND

MINISTRY OF TRANSPORT
DEPARTMENT OF HIGHWAYS

STANDARD DRAWING

THREE COLUMNS PIER WITHOUT SIDEWALK (FOR I-GIRDER)
ROADWAY WIDTH 13.00 – 15.00 M., 15.00 M. SPAN,
HEIGHT ≤ 15.00 M.

DESIGNED : D.O.H. & CONSULTANTS | CHECKED : BUREAU OF LOCATION & DESIGN | DATE : OCT 2015

SUBMITTED : (DIRECTOR OF LOCATION & DESIGN BUREAU) | SCALE : AS SHOWN

APPROVED : (FOR DIRECTOR GENERAL) | DWG NO. PC–207

SHEET NO. 267

D:\std dwg 2015\PC-207(REV00)

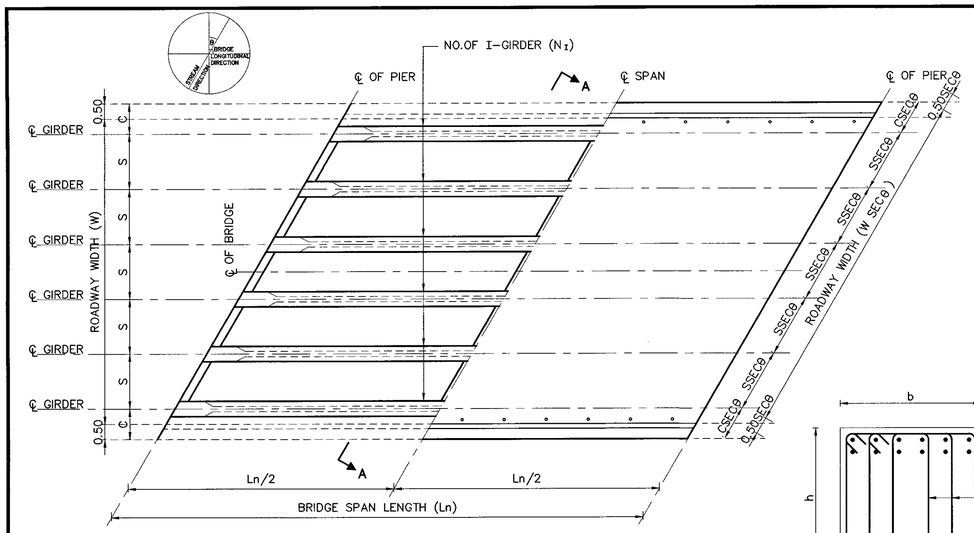

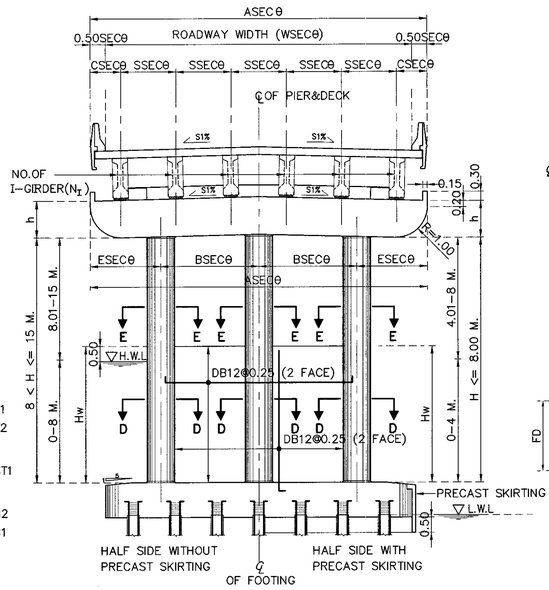

SECTION A–A

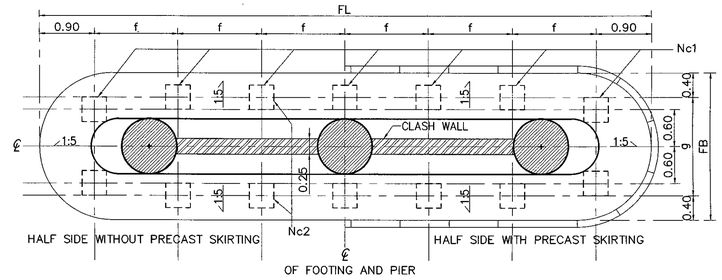

PLAN OF FOOTING

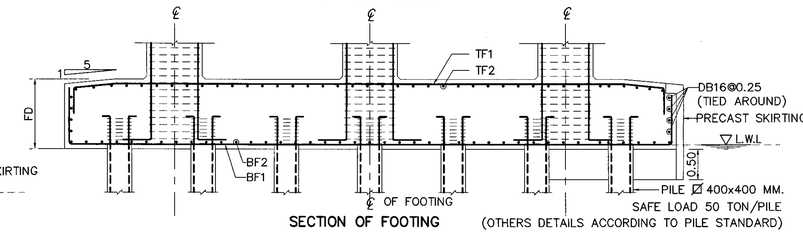

SECTION OF FOOTING

SECTION B–B

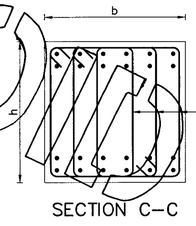

SECTION C–C

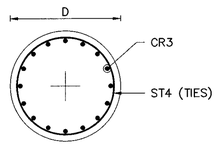

SECTION E–E

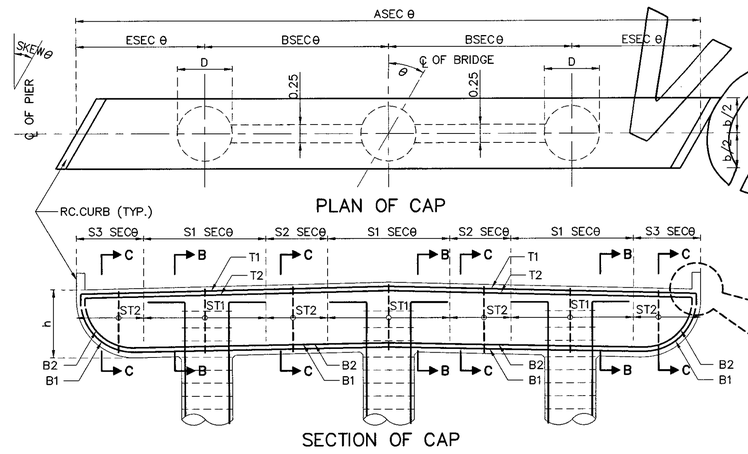

PLAN OF CAP

SECTION OF CAP

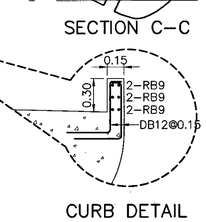

CURB DETAIL

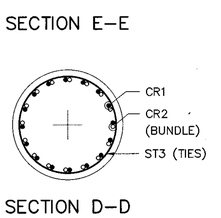

SECTION D–D

ADJUST LENGHT FOR SKEW BRIDGE

VALUE OF SECθ IN CASE OF SKEW BRIDGE (SKEW, θ)									
SKEW ANGLE, θ (DEGREE)	0	5	10	15	20	25	30	35	40	45
SEC θ	1.0000	1.0038	1.0154	1.0353	1.0642	1.1034	1.1547	1.2208	1.3054	1.4142

1.HEIGHT ≤ 8.00 M.

1.1 DIMENSION OF SUBSTRUCTURE & REBAR OF COLUMN

Ln (M.)	W (M.)	NO.OF I-GIRDER (N_I)	DIMENSION (M.)							C		REBAR COLUMN					
			A	B	E	S	S1	S2	S3	STRAIGHT	CURVED	D (M.)	CR1	CR2	ST3	CR3	ST4
20.00 M. SEISMIC LEVEL 1	13.00	7	14.00	5.10	1.90	2.00	3.80	1.30	–	1.00	1.00–1.50	0.80	26–DB25	20–DB25	DB12@0.15	26–DB25	DB12@0.30
	14.00	8	15.00	5.30	2.20	1.86	2.40	2.90	1.00	1.00	1.00–1.50	0.80	26–DB25	24–DB25	DB12@0.15	26–DB25	DB12@0.30
	15.00	8	16.00	5.70	2.30	2.00	2.60	3.10	1.00	1.00	1.00–1.50	0.80	26–DB25	24–DB25	DB12@0.15	26–DB25	DB12@0.30
20.00 M. SEISMIC LEVEL 2	13.00	7	14.00	5.10	1.90	2.00	3.80	1.30	–	1.00	1.00–1.50	0.80	26–DB25	20–DB25	DB12@0.15	26–DB25	DB12@0.30
	14.00	8	15.00	5.30	2.20	1.86	2.40	2.90	1.00	1.00	1.00–1.50	0.80	26–DB25	24–DB25	DB12@0.15	26–DB25	DB12@0.30
	15.00	8	16.00	5.70	2.30	2.00	2.60	3.10	1.00	1.00	1.00–1.50	0.80	26–DB25	24–DB25	DB12@0.15	26–DB25	DB12@0.30

1.2 REBAR OF CAP BEAM

Ln (M.)	W (M.)	b	h	SKEW 0–30						SKEW 31–45					
				T1	T2	B1	B2	ST1(STIRRUPS)	ST2(STIRRUPS)	T1	T2	B1	B2	ST1(STIRRUPS)	ST2(STIRRUPS)
20.00 M. SEISMIC LEVEL 1	13.00	1.00	0.80	13–DB25	–	13–DB25	–	5–DB12@0.15	4–DB12@0.15	13–DB25	–	13–DB25	–	5–DB12@0.15	4–DB12@0.15
	14.00	1.00	0.80	15–DB25	–	15–DB25	–	6–DB12@0.15	4–DB12@0.15	15–DB25	–	15–DB25	–	6–DB12@0.15	4–DB12@0.15
	15.00	1.00	0.80	14–DB25	3–DB25	14–DB25	3–DB25	7–DB12@0.15	4–DB12@0.15	14–DB25	3–DB25	14–DB25	3–DB25	7–DB12@0.15	4–DB12@0.15
20.00 M. SEISMIC LEVEL 2	13.00	1.00	0.80	13–DB25	–	13–DB25	–	5–DB12@0.15	4–DB12@0.15	13–DB25	–	13–DB25	–	5–DB12@0.15	4–DB12@0.15
	14.00	1.00	0.80	15–DB25	–	15–DB25	–	6–DB12@0.15	4–DB12@0.15	15–DB25	–	15–DB25	–	6–DB12@0.15	4–DB12@0.15
	15.00	1.00	0.80	14–DB25	3–DB25	14–DB25	3–DB25	7–DB12@0.15	4–DB12@0.15	14–DB25	3–DB25	14–DB25	3–DB25	7–DB12@0.15	4–DB12@0.15

1.3 FOUNDATION & PILE

Ln (M.)	W (M.)	PILE SIZING (MM.)	Nc1	Nc2	NO.OF PILE	FOOTING DIMENSION (M.)					BOTTOM REBAR		TOP REBAR	
						FL	FB	FD	f	g	BF1	BF2	TF1	TF2
20.00 M. SEISMIC LEVEL 1	13.00	☒ 400x400	7	2	14	14.00	2.60	1.20	2.03	1.80	DB25@0.18	DB25@0.20	DB25@0.18	DB20@0.25
	14.00	☒ 400x400	7	2	14	14.00	2.60	1.20	2.03	1.80	DB25@0.14	DB25@0.20	DB25@0.14	DB20@0.25
	15.00	☒ 400x400	8	2	16	15.00	2.60	1.20	1.89	1.80	DB25@0.14	DB25@0.20	DB25@0.14	DB20@0.25
20.00 M. SEISMIC LEVEL 2	13.00	☒ 400x400	7	2	14	14.00	2.60	1.20	2.03	1.80	DB25@0.18	DB25@0.20	DB25@0.18	DB20@0.25
	14.00	☒ 400x400	7	2	14	14.00	2.60	1.20	2.03	1.80	DB25@0.14	DB25@0.20	DB25@0.14	DB20@0.25
	15.00	☒ 400x400	8	2	16	15.00	2.60	1.20	1.89	1.80	DB25@0.14	DB25@0.20	DB25@0.14	DB20@0.25

2. 8.00 M. < HEIGHT ≤ 15.00 M.

2.1 DIMENSION OF SUBSTRUCTURE & REBAR OF COLUMN

Ln (M.)	W (M.)	NO.OF I-GIRDER (N_I)	DIMENSION (M.)							C		REBAR COLUMN					
			A	B	E	S	S1	S2	S3	STRAIGHT	CURVED	D (M.)	CR1	CR2	ST3	CR3	ST4
20.00 M. SEISMIC LEVEL 1	13.00	7	14.00	5.10	1.90	2.00	3.80	1.30	–	1.00	1.00–1.50	1.00	29–DB25	29–DB25	DB12@0.15	29–DB25	DB12@0.30
	14.00	8	15.00	5.30	2.20	1.86	2.40	2.90	1.00	1.00	1.00–1.50	1.00	29–DB25	29–DB25	DB12@0.15	29–DB25	DB12@0.30
	15.00	8	16.00	5.70	2.30	2.00	2.60	3.10	1.00	1.00	1.00–1.50	1.00	30–DB25	30–DB25	DB12@0.15	30–DB25	DB12@0.30
20.00 M. SEISMIC LEVEL 2	13.00	7	14.00	5.10	1.90	2.00	3.80	1.30	–	1.00	1.00–1.50	1.00	34–DB25	34–DB25	DB12@0.15	34–DB25	DB12@0.30
	14.00	8	15.00	5.30	2.20	1.86	2.40	2.90	1.00	1.00	1.00–1.50	1.00	34–DB25	34–DB25	DB12@0.15	34–DB25	DB12@0.30
	15.00	8	16.00	5.70	2.30	2.00	2.60	3.10	1.00	1.00	1.00–1.50	1.00	38–DB25	38–DB25	DB12@0.15	38–DB28	DB12@0.30

2.2 REBAR OF CAP BEAM

Ln (M.)	W (M.)	b	h	SKEW 0–30						SKEW 31–45					
				T1	T2	B1	B2	ST1(STIRRUPS)	ST2(STIRRUPS)	T1	T2	B1	B2	ST1(STIRRUPS)	ST2(STIRRUPS)
20.00 M. SEISMIC LEVEL 1	13.00	1.20	1.00	11–DB25	–	11–DB25	–	4–DB12@0.15	4–DB12@0.30	11–DB25	–	11–DB25	–	4–DB12@0.15	4–DB12@0.30
	14.00	1.20	1.00	14–DB25	–	14–DB25	–	4–DB12@0.15	4–DB12@0.30	14–DB25	–	14–DB25	–	4–DB12@0.15	4–DB12@0.30
	15.00	1.20	1.00	14–DB25	–	14–DB25	–	5–DB12@0.15	4–DB12@0.30	14–DB25	–	14–DB25	–	5–DB12@0.15	4–DB12@0.30
20.00 M. SEISMIC LEVEL 2	13.00	1.20	1.00	11–DB25	–	11–DB25	–	4–DB12@0.15	4–DB12@0.30	11–DB25	–	11–DB25	–	4–DB12@0.15	4–DB12@0.30
	14.00	1.20	1.00	14–DB25	–	14–DB25	–	4–DB12@0.15	4–DB12@0.30	14–DB25	–	14–DB25	–	4–DB12@0.15	4–DB12@0.30
	15.00	1.20	1.00	14–DB25	–	14–DB25	–	5–DB12@0.15	4–DB12@0.30	14–DB25	–	14–DB25	–	5–DB12@0.15	4–DB12@0.30

2.3 FOUNDATION & PILE

Ln (M.)	W (M.)	PILE SIZING (MM.)	Nc1	Nc2	NO.OF PILE	FOOTING DIMENSION (M.)					BOTTOM REBAR		TOP REBAR	
						FL	FB	FD	f	g	BF1	BF2	TF1	TF2
20.00 M. SEISMIC LEVEL 1	13.00	☒ 400x400	10	2	20	14.00	2.60	1.20	1.36	1.80	DB25@0.14	DB25@0.20	DB25@0.14	DB20@0.25
	14.00	☒ 400x400	10	2	20	14.00	2.60	1.20	1.36	1.80	DB25@0.14	DB25@0.20	DB25@0.14	DB20@0.25
	15.00	☒ 400x400	10	2	20	15.00	2.60	1.20	1.47	1.80	DB25@0.13	DB25@0.20	DB25@0.13	DB20@0.25
20.00 M. SEISMIC LEVEL 2	13.00	☒ 400x400	10	2	20	14.00	2.60	1.20	1.36	1.80	DB25@0.14	DB25@0.20	DB25@0.14	DB20@0.25
	14.00	☒ 400x400	10	2	20	14.00	2.60	1.20	1.36	1.80	DB25@0.14	DB25@0.20	DB25@0.14	DB20@0.25
	15.00	☒ 400x400	10	2	20	15.00	2.60	1.20	1.47	1.80	DB25@0.13	DB25@0.20	DB25@0.13	DB20@0.25

NOTE :
1. ALL DIMENSIONS SHOWN ARE IN METERS UNLESS OTHERWISE INDICATED
2. LIVE LOADING : VEHICLE LOAD HL–93
3. A MINIMUM ULTIMATE COMPRESSIVE STRENGTH FOR A 150X150X150 MM. CUBE AT 28 DAYS AS FOLLOWS :
   A) FOR COLUMN AND CAP BEAM 35 MPa
   B) FOR FOOTING 35 MPa
4. REBARS SMALLER THAN RB9 MM. SHALL BE TIS 20 GRADE SR 24 PLAIN ROUND BARS, OTHERS SHALL BE TIS 24 GRADE SD40 DEFORMED BARS UNLESS OTHERWISE INDICATED.

REF.	REVISION	SIGNATURE	DATE

KINGDOM OF THAILAND

MINISTRY OF TRANSPORT

DEPARTMENT OF HIGHWAYS

STANDARD DRAWING

THREE COLUMNS PIER WITHOUT SIDEWALK (FOR I-GIRDER)
ROADWAY WIDTH 13.00 – 15.00 M., 20.00 M. SPAN,
HEIGHT ≤ 15.00 M.

DESIGNED : D.O.H. & CONSULTANTS | CHECKED : BUREAU OF LOCATION & DESIGN | DATE : OCT 2015

SUBMITTED : (DIRECTOR OF LOCATION & DESIGN BUREAU) | SCALE : AS SHOWN

APPROVED : (FOR DIRECTOR GENERAL) | DWG NO. PC–208

SHEET NO. 268

D:\std dwg 2015\PC-208(REV00)

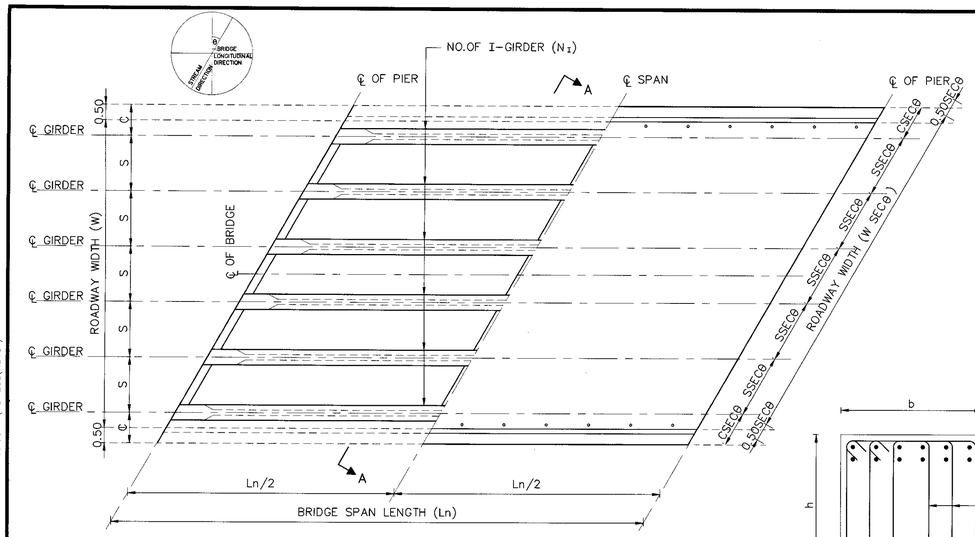

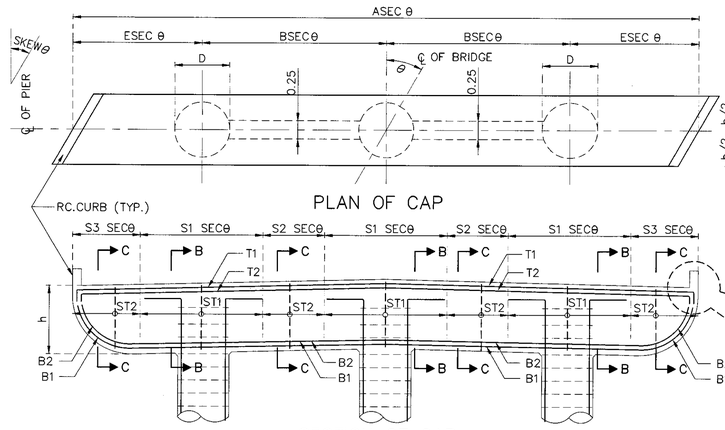

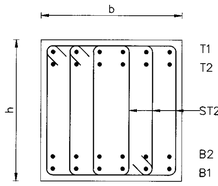

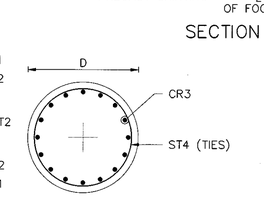

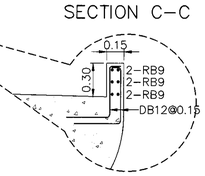

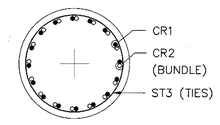

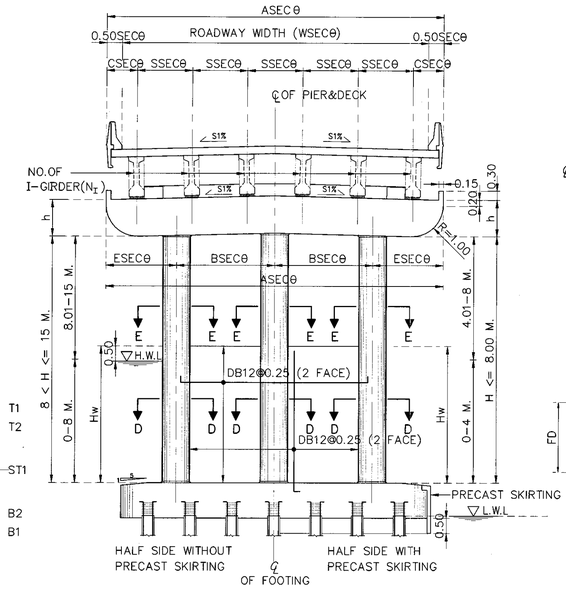

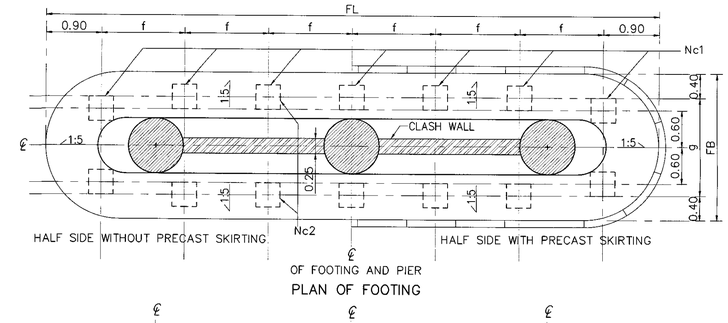

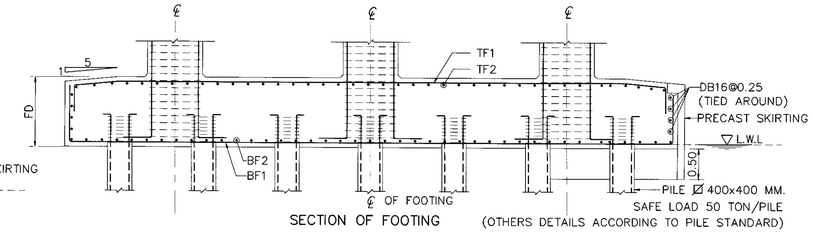

ADJUST LENGHT FOR SKEW BRIDGE

VALUE OF SECθ IN CASE OF SKEW BRIDGE (SKEW, θ)										
SKEW ANGLE, θ (DEGREE)	0	5	10	15	20	25	30	35	40	45
SEC θ	1.0000	1.0038	1.0154	1.0353	1.0642	1.1034	1.1547	1.2208	1.3054	1.4142

1.HEIGHT ≤ 8.00 M.

1.1 DIMENSION OF SUBSTRUCTURE & REBAR OF COLUMN

Ln (M.)	W (M.)	NO.OF I-GIRDER (N_I)	DIMENSION (M.)							C		REBAR COLUMN					
			A	B	E	S	S1	S2	S3	STRAIGHT	CURVED	D (M.)	CR1	CR2	ST3	CR3	ST4
20.00 M. SEISMIC LEVEL 1	13.00	7	14.00	5.10	1.90	2.00	3.80	1.30	–	1.00	1.00–1.50	0.80	26–DB25	20–DB25	DB12@0.15	26–DB25	DB12@0.30
	14.00	8	15.00	5.30	2.20	1.86	2.40	2.90	1.00	1.00	1.00–1.50	0.80	26–DB25	24–DB25	DB12@0.15	26–DB25	DB12@0.30
	15.00	8	16.00	5.70	2.30	2.00	2.60	3.10	1.00	1.00	1.00–1.50	0.80	26–DB25	24–DB25	DB12@0.15	26–DB25	DB12@0.30
20.00 M. SEISMIC LEVEL 2	13.00	7	14.00	5.10	1.90	2.00	3.80	1.30	–	1.00	1.00–1.50	0.80	26–DB25	20–DB25	DB12@0.15	26–DB25	DB12@0.30
	14.00	8	15.00	5.30	2.20	1.86	2.40	2.90	1.00	1.00	1.00–1.50	0.80	26–DB25	24–DB25	DB12@0.15	26–DB25	DB12@0.30
	15.00	8	16.00	5.70	2.30	2.00	2.60	3.10	1.00	1.00	1.00–1.50	0.80	26–DB25	24–DB25	DB12@0.15	26–DB25	DB12@0.30

1.2 REBAR OF CAP BEAM

Ln (M.)	W (M.)	b	h	SKEW 0–30						SKEW 31–45					
				T1	T2	B1	B2	ST1(STIRRUPS)	ST2(STIRRUPS)	T1	T2	B1	B2	ST1(STIRRUPS)	ST2(STIRRUPS)
20.00 M. SEISMIC LEVEL 1	13.00	1.00	0.80	13–DB25	–	13–DB25	–	5–DB12@0.15	4–DB12@0.15	13–DB25	–	13–DB25	–	5–DB12@0.15	4–DB12@0.15
	14.00	1.00	0.80	15–DB25	–	15–DB25	–	6–DB12@0.15	4–DB12@0.15	15–DB25	–	15–DB25	–	6–DB12@0.15	4–DB12@0.15
	15.00	1.00	0.80	14–DB25	3–DB25	14–DB25	3–DB25	7–DB12@0.15	4–DB12@0.15	14–DB25	3–DB25	14–DB25	3–DB25	7–DB12@0.15	4–DB12@0.15
20.00 M. SEISMIC LEVEL 2	13.00	1.00	0.80	13–DB25	–	13–DB25	–	5–DB12@0.15	4–DB12@0.15	13–DB25	–	13–DB25	–	5–DB12@0.15	4–DB12@0.15
	14.00	1.00	0.80	15–DB25	–	15–DB25	–	6–DB12@0.15	4–DB12@0.15	15–DB25	–	15–DB25	–	6–DB12@0.15	4–DB12@0.15
	15.00	1.00	0.80	14–DB25	3–DB25	14–DB25	3–DB25	7–DB12@0.15	4–DB12@0.15	14–DB25	3–DB25	14–DB25	3–DB25	7–DB12@0.15	4–DB12@0.15

1.3 FOUNDATION & PILE

Ln (M.)	W (M.)	PILE SIZING (MM.)	Nc1	Nc2	NO.OF PILE	FOOTING DIMENSION (M.)					BOTTOM REBAR		TOP REBAR	
						FL	FB	FD	f	g	BF1	BF2	TF1	TF2
20.00 M. SEISMIC LEVEL 1	13.00	Ø 400x400	7	2	14	14.00	2.60	1.20	2.03	1.80	DB25@0.18	DB25@0.20	DB25@0.18	DB20@0.25
	14.00	Ø 400x400	7	2	14	14.00	2.60	1.20	2.03	1.80	DB25@0.14	DB25@0.20	DB25@0.14	DB20@0.25
	15.00	Ø 400x400	8	2	16	15.00	2.60	1.20	1.89	1.80	DB25@0.14	DB25@0.20	DB25@0.14	DB20@0.25
20.00 M. SEISMIC LEVEL 2	13.00	Ø 400x400	7	2	14	14.00	2.60	1.20	2.03	1.80	DB25@0.18	DB25@0.20	DB25@0.18	DB20@0.25
	14.00	Ø 400x400	7	2	14	14.00	2.60	1.20	2.03	1.80	DB25@0.14	DB25@0.20	DB25@0.14	DB20@0.25
	15.00	Ø 400x400	8	2	16	15.00	2.60	1.20	1.89	1.80	DB25@0.14	DB25@0.20	DB25@0.14	DB20@0.25

2. 8.00 M. < HEIGHT ≤ 15.00 M.

2.1 DIMENSION OF SUBSTRUCTURE & REBAR OF COLUMN

Ln (M.)	W (M.)	NO.OF I-GIRDER (N_I)	DIMENSION (M.)							C		REBAR COLUMN					
			A	B	E	S	S1	S2	S3	STRAIGHT	CURVED	D (M.)	CR1	CR2	ST3	CR3	ST4
20.00 M. SEISMIC LEVEL 1	13.00	7	14.00	5.10	1.90	2.00	3.80	1.30	–	1.00	1.00–1.50	1.00	29–DB25	29–DB25	DB12@0.15	29–DB25	DB12@0.30
	14.00	8	15.00	5.30	2.20	1.86	2.40	2.90	1.00	1.00	1.00–1.50	1.00	29–DB25	29–DB25	DB12@0.15	29–DB25	DB12@0.30
	15.00	8	16.00	5.70	2.30	2.00	2.60	3.10	1.00	1.00	1.00–1.50	1.00	30–DB25	30–DB25	DB12@0.15	30–DB25	DB12@0.30
20.00 M. SEISMIC LEVEL 2	13.00	7	14.00	5.10	1.90	2.00	3.80	1.30	–	1.00	1.00–1.50	1.00	34–DB25	34–DB25	DB12@0.15	34–DB25	DB12@0.30
	14.00	8	15.00	5.30	2.20	1.86	2.40	2.90	1.00	1.00	1.00–1.50	1.00	34–DB25	34–DB25	DB12@0.15	34–DB25	DB12@0.30
	15.00	8	16.00	5.70	2.30	2.00	2.60	3.10	1.00	1.00	1.00–1.50	1.00	38–DB25	38–DB25	DB12@0.15	38–DB25	DB12@0.30

2.2 REBAR OF CAP BEAM

Ln (M.)	W (M.)	b	h	SKEW 0–30						SKEW 31–45					
				T1	T2	B1	B2	ST1(STIRRUPS)	ST2(STIRRUPS)	T1	T2	B1	B2	ST1(STIRRUPS)	ST2(STIRRUPS)
20.00 M. SEISMIC LEVEL 1	13.00	1.20	1.00	11–DB25	–	11–DB25	–	4–DB12@0.15	4–DB12@0.30	11–DB25	–	11–DB25	–	4–DB12@0.15	4–DB12@0.30
	14.00	1.20	1.00	14–DB25	–	14–DB25	–	4–DB12@0.15	4–DB12@0.30	14–DB25	–	14–DB25	–	4–DB12@0.15	4–DB12@0.30
	15.00	1.20	1.00	14–DB25	–	14–DB25	–	5–DB12@0.15	4–DB12@0.30	14–DB25	–	14–DB25	–	5–DB12@0.15	4–DB12@0.30
20.00 M. SEISMIC LEVEL 2	13.00	1.20	1.00	11–DB25	–	11–DB25	–	4–DB12@0.15	4–DB12@0.30	11–DB25	–	11–DB25	–	4–DB12@0.15	4–DB12@0.30
	14.00	1.20	1.00	14–DB25	–	14–DB25	–	4–DB12@0.15	4–DB12@0.30	14–DB25	–	14–DB25	–	4–DB12@0.15	4–DB12@0.30
	15.00	1.20	1.00	14–DB25	–	14–DB25	–	5–DB12@0.15	4–DB12@0.30	14–DB25	–	14–DB25	–	5–DB12@0.15	4–DB12@0.30

2.3 FOUNDATION & PILE

Ln (M.)	W (M.)	PILE SIZING (MM.)	Nc1	Nc2	NO.OF PILE	FOOTING DIMENSION (M.)					BOTTOM REBAR		TOP REBAR	
						FL	FB	FD	f	g	BF1	BF2	TF1	TF2
20.00 M. SEISMIC LEVEL 1	13.00	Ø 400x400	10	2	20	14.00	2.60	1.20	1.36	1.80	DB25@0.14	DB25@0.20	DB25@0.14	DB20@0.25
	14.00	Ø 400x400	10	2	20	14.00	2.60	1.20	1.36	1.80	DB25@0.14	DB25@0.20	DB25@0.14	DB20@0.25
	15.00	Ø 400x400	10	2	20	15.00	2.60	1.20	1.47	1.80	DB25@0.13	DB25@0.20	DB25@0.13	DB20@0.25
20.00 M. SEISMIC LEVEL 2	13.00	Ø 400x400	10	2	20	14.00	2.60	1.20	1.36	1.80	DB25@0.14	DB25@0.20	DB25@0.14	DB20@0.25
	14.00	Ø 400x400	10	2	20	14.00	2.60	1.20	1.36	1.80	DB25@0.14	DB25@0.20	DB25@0.14	DB20@0.25
	15.00	Ø 400x400	10	2	20	15.00	2.60	1.20	1.47	1.80	DB25@0.13	DB25@0.20	DB25@0.13	DB20@0.25

NOTES :

1. ALL DIMENSIONS SHOWN ARE IN METERS UNLESS OTHERWISE INDICATED.
2. DESIGN LIVE LOAD : HL-93
3. A MINIMUM ULTIMATE COMPRESSIVE STRENGTH FOR A 150x150x150 MM. CUBE AT 28 DAYS AS FOLLOWS:
   A) FOR ABUTMENT AND WINGWALL 35 MPa. (357 KG/CM^2)
   B) FOR FOOTING 35 MPa. (357 KG/CM^2)
   C) FOR SIDEWALK AND BARRIER 35 MPa. (357 KG/CM^2)
4. REBAR SIZES SMALLER THAN 12 MM. SHALL BE TIS 20 GRADE SR 24 PLAIN ROUND BARS, OTHERS SHALL BE TIS 24 GRADE SD 40 DEFORMED BARS UNLESS OTHERWISE INDICATED.

REV.	REVISION	SIGNATURE	DATE
REV.1	REVISION 1/2018		JAN 2018

KINGDOM OF THAILAND
MINISTRY OF TRANSPORT
DEPARTMENT OF HIGHWAYS

STANDARD DRAWING

THREE COLUMNS PIER WITHOUT SIDEWALK (FOR I-GIRDER)
ROADWAY WIDTH 13.00 – 15.00 M., 20.00 M. SPAN,
8 < HEIGHT ≤ 15.00 M.

DESIGNED : D.O.H. & CONSULTANTS	**CHECKED :** BUREAU OF LOCATION & DESIGN	**DATE :** MAR 2018
SUBMITTED : (DIRECTOR OF LOCATION & DESIGN BUREAU)		**SCALE :** AS SHOWN
APPROVED : (FOR DIRECTOR GENERAL)		**DWG NO.** PC-208
		SHEET NO. 268/R1

D:\20141103_Term Group\ปี 2558\10P2045_STANDARD DRAWING DOH\Standard Drawing DOH_61 02 19\แก้ไขครั้งล่าสุด\แก้ไข\PC-208_Revision 1_2017-JAN2018\ENG\STANDARD FINAL-1-CAD(ENG)\

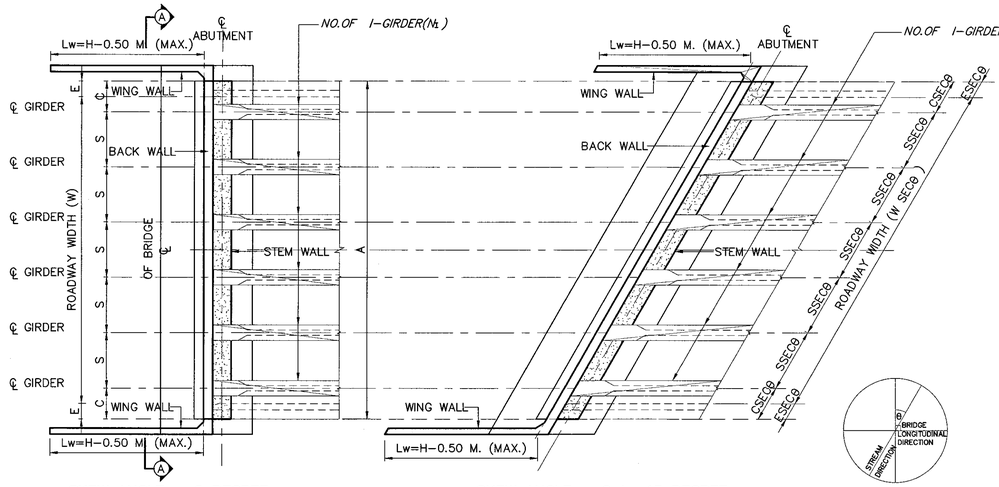

SKEW ANGLE = 0 DEGREE

SKEW ANGLE = 0 to 45 DEGREE

PLAN OF ABUTMENT

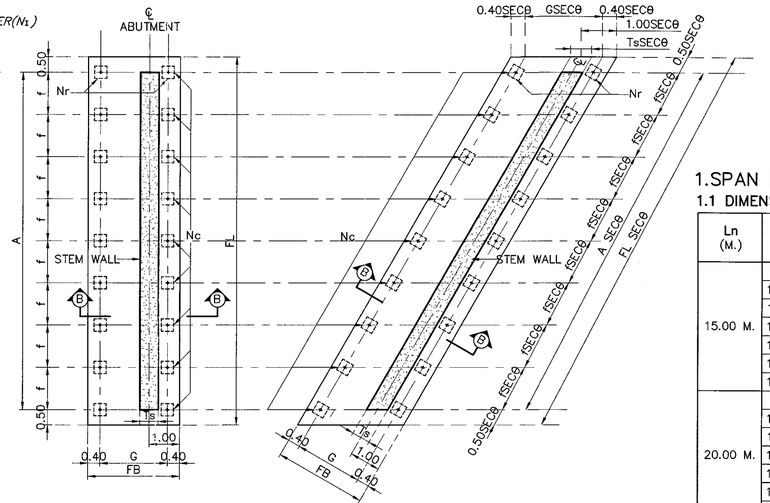

SKEW ANGLE = 0 DEGREE

SKEW ANGLE = 1 TO 45 DEGREE

PLAN OF FOOTING

1.SPAN LENGTH 15.00 M. AND 20.00 M.

1.1 DIMENSION OF ABUTMENT

Ln (M.)	W (M.)	NO.OF I-GIRDER (N_I)	H(M.) (MAX)	DIMENSION (M.)						C	
				A	E	S	Hb	Hd	Ts	STRAIGHT	CURVED
15.00 M.	9.00	5	5.50	10.00	0.50	2.00	1.03 *	4.47	0.60	1.00	1.00–1.25
	10.00	6	5.50	11.00	0.50	1.80	1.03 *	4.47	0.60	1.00	1.00–1.25
	11.00	6	5.50	12.00	0.50	2.00	1.03 *	4.47	0.60	1.00	1.00–1.25
	12.00	7	5.50	13.00	0.50	1.83	1.03 *	4.47	0.60	1.00	1.00–1.25
	13.00	7	5.50	14.00	0.50	2.00	1.03 *	4.47	0.60	1.00	1.00–1.25
	14.00	8	5.50	15.00	0.50	1.86	1.03 *	4.47	0.60	1.00	1.00–1.25
	15.00	8	5.50	16.00	0.50	2.00	1.03 *	4.47	0.60	1.00	1.00–1.50
20.00 M.	9.00	5	5.50	10.00	0.50	2.00	1.48 *	4.02	0.60	1.00	1.00–1.50
	10.00	6	5.50	11.00	0.50	1.80	1.48 *	4.02	0.60	1.00	1.00–1.50
	11.00	6	5.50	12.00	0.50	2.00	1.48 *	4.02	0.60	1.00	1.00–1.50
	12.00	7	5.50	13.00	0.50	1.83	1.48 *	4.02	0.60	1.00	1.00–1.50
	13.00	7	5.50	14.00	0.50	2.00	1.48 *	4.02	0.60	1.00	1.00–1.50
	14.00	8	5.50	15.00	0.50	1.86	1.48 *	4.02	0.60	1.00	1.00–1.50
	15.00	8	5.50	16.00	0.50	2.00	1.48 *	4.02	0.60	1.00	1.00–1.50

REMARK ; * = DEPENDS ON DEPTH OF GIRDER

VOID

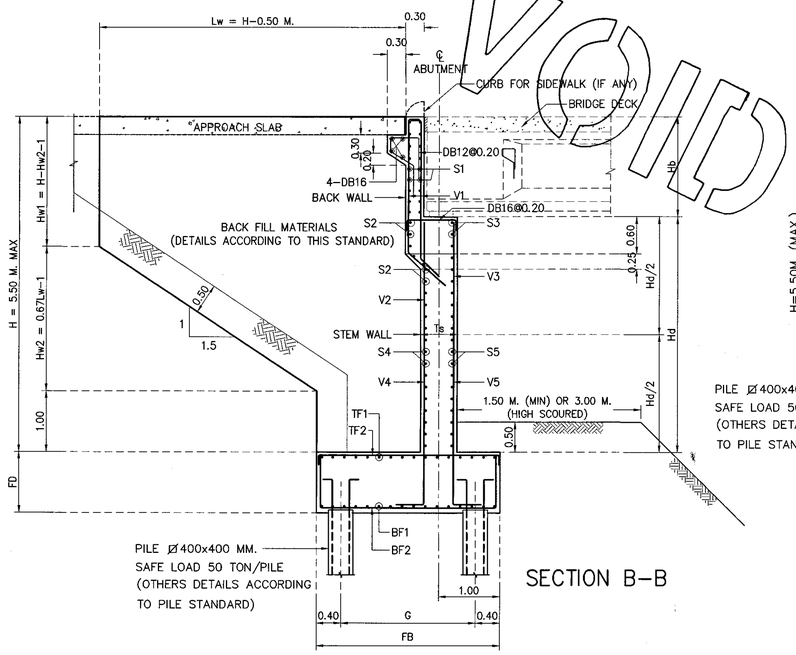

SECTION B–B

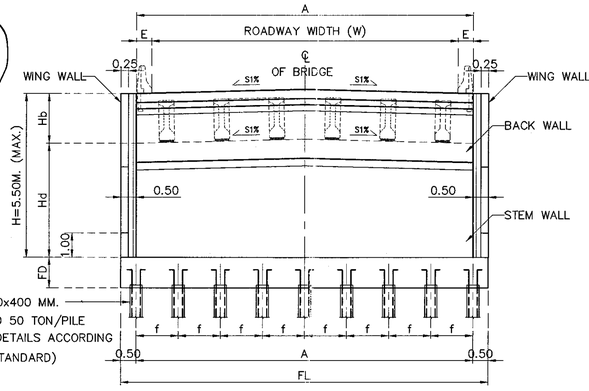

SECTION A–A

1.2 REBAR IN ABUTMENT

Ln (M.)	W (M.)	SKEW 0–45 DEGREE									
		V1	V2	V3	V4	V5	S1	S2	S3	S4	S5
15.00 M.	9.00–15.00	DB20@0.20	DB20@0.20	DB16@0.20	DB20@0.10	DB16@0.20	DB16@0.20	DB16@0.20	DB16@0.20	DB16@0.20	DB16@0.20
20.00 M.	9.00–15.00	DB20@0.20	DB20@0.20	DB16@0.20	DB20@0.10	DB16@0.20	DB16@0.20	DB16@0.20	DB16@0.20	DB16@0.20	DB16@0.20

1.3 FOUNDATION & PILE

Ln (M.)	W (M.)	PILE SIZING (MM.)	Nc	Nr	NO.OF PILE	FOOTING DIMENSION (M.)					BOTTOM REBAR		TOP REBAR	
						FL	FB	FD	f	G	BF1	BF2	TF1	TF2
15.00 M.	9.00	Ø 400x400	8	2	16	11.00	3.50	1.00	1.46	2.70	DB20@0.15	DB25@0.15	DB20@0.30	DB20@0.30
	10.00	Ø 400x400	9	2	18	12.00	3.50	1.00	1.40	2.70	DB20@0.15	DB25@0.15	DB20@0.30	DB20@0.30
	11.00	Ø 400x400	10	2	20	13.00	3.50	1.00	1.36	2.70	DB20@0.15	DB25@0.15	DB20@0.30	DB20@0.30
	12.00	Ø 400x400	10	2	20	14.00	3.50	1.00	1.47	2.70	DB20@0.15	DB25@0.15	DB20@0.30	DB20@0.30
	13.00	Ø 400x400	11	2	22	15.00	3.50	1.00	1.42	2.70	DB20@0.15	DB25@0.15	DB20@0.30	DB20@0.30
	14.00	Ø 400x400	11	2	22	16.00	3.50	1.00	1.52	2.70	DB20@0.15	DB25@0.15	DB20@0.30	DB20@0.30
	15.00	Ø 400x400	12	2	24	17.00	3.50	1.00	1.47	2.70	DB20@0.15	DB25@0.15	DB20@0.30	DB20@0.30
20.00 M.	9.00	Ø 400x400	9	2	18	11.00	3.50	1.00	1.28	2.70	DB20@0.15	DB25@0.125	DB20@0.30	DB20@0.30
	10.00	Ø 400x400	10	2	20	12.00	3.50	1.00	1.24	2.70	DB20@0.15	DB25@0.125	DB20@0.30	DB20@0.30
	11.00	Ø 400x400	11	2	22	13.00	3.50	1.00	1.22	2.70	DB20@0.15	DB25@0.125	DB20@0.30	DB20@0.30
	12.00	Ø 400x400	12	2	24	14.00	3.50	1.00	1.20	2.70	DB20@0.15	DB25@0.125	DB20@0.30	DB20@0.30
	13.00	Ø 400x400	12	2	24	15.00	3.50	1.00	1.29	2.70	DB20@0.15	DB25@0.125	DB20@0.30	DB20@0.30
	14.00	Ø 400x400	12	2	24	16.00	3.50	1.00	1.38	2.70	DB20@0.15	DB25@0.125	DB20@0.30	DB20@0.30
	15.00	Ø 400x400	14	2	28	17.00	3.50	1.00	1.25	2.70	DB20@0.15	DB25@0.125	DB20@0.30	DB20@0.30

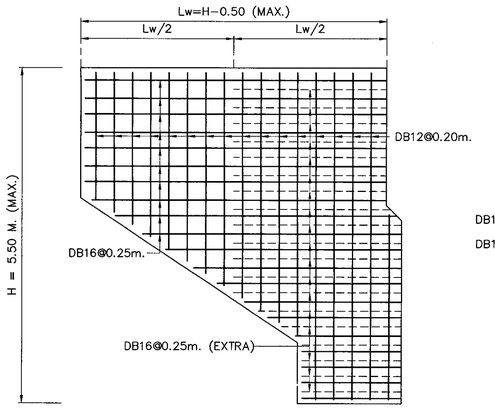

SECTION C–C

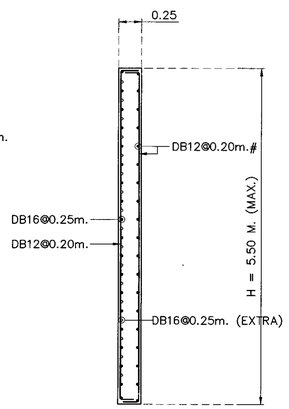

SECTION D–D

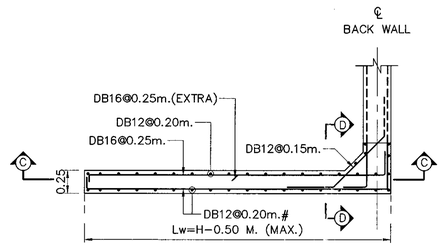

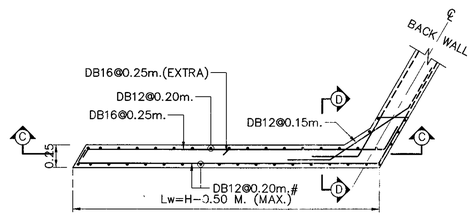

1.4 ADJUST LENGTH FOR SKEW BRIDGE

SKEW ANGLE, θ (DEGREE)	VALUE OF SEC θ IN CASE OF SKEW BRIDGE (SKEW, θ)								
	0	5	10	15	20	25	30	35	40	45
SEC θ	1.0000	1.0038	1.0154	1.0353	1.0642	1.1034	1.1547	1.2208	1.3054	1.4142

NOTE :
1. ALL DIMENSIONS SHOWN ARE IN METERS UNLESS OTHERWISE INDICATED
2. LIVE LOADING : VEHICLE LOAD HL–93
3. A MINIMUM ULTIMATE COMPRESSIVE STRENGTH FOR A 150X150X150 MM. CUBE AT 28 DAYS AS FOLLOWS :
   A) FOR ABUTMENT/WINGWALL 35 MPa
   B) FOR FOOTING 35 MPa
4. REBARS SMALLER THAN RB9 MM. SHALL BE TIS 20 GRADE SR 24 PLAIN ROUND BARS, OTHERS SHALL BE TIS 24 GRADE SD40 DEFORMED BARS UNLESS OTHERWISE INDICATED.

KINGDOM OF THAILAND

MINISTRY OF TRANSPORT

DEPARTMENT OF HIGHWAYS

STANDARD DRAWING

ABUTMENT WITHOUT SIDEWALK (FOR I–GIRDER)
ROADWAY WIDTH 9.00 – 15.00 M., 15.00 M.
AND 20.00 M. SPAN, HEIGHT ≤ 5.50 M.

REF.	REVISION	SIGNATURE	DATE

DESIGNED : D.O.H. & CONSULTANTS **CHECKED :** BUREAU OF LOCATION & DESIGN **DATE :** OCT 2015

SUBMITTED : (DIRECTOR OF LOCATION & DESIGN BUREAU) **SCALE :** AS SHOWN

APPROVED : (FOR DIRECTOR GENERAL) **DWG NO.** PC–209

SHEET NO. 269

D:\std dwg 2015\PC-209(REV00)

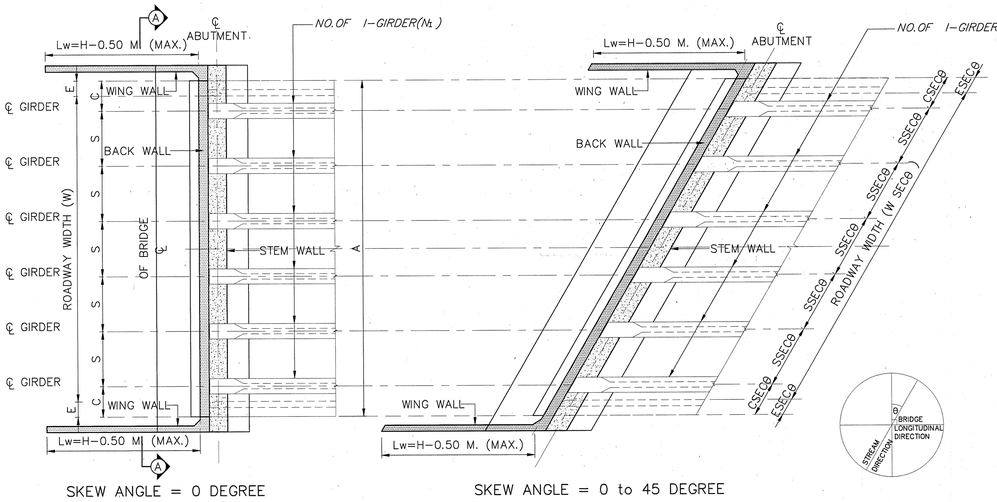

PLAN OF ABUTMENT

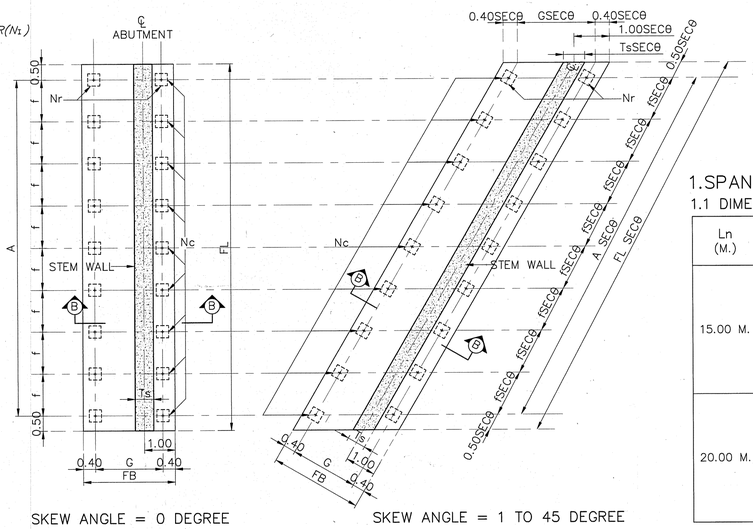

PLAN OF FOOTING

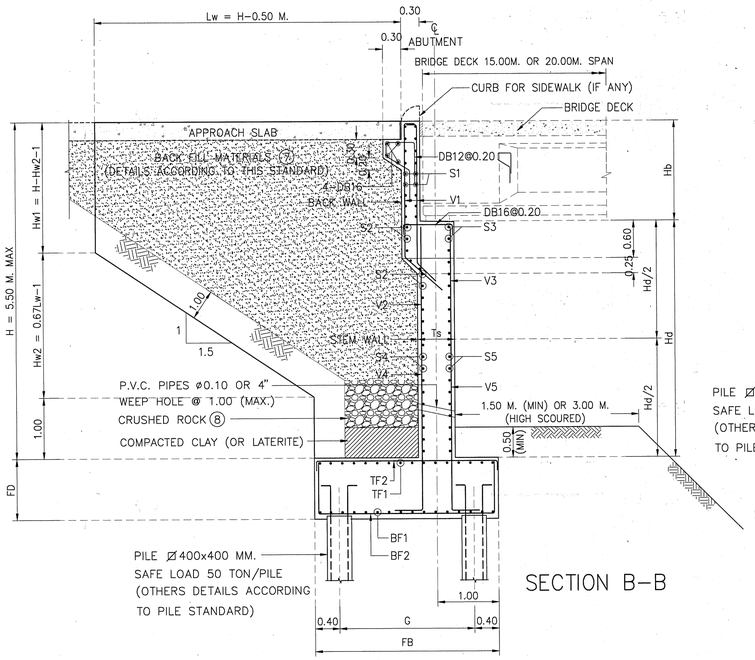

SECTION B-B

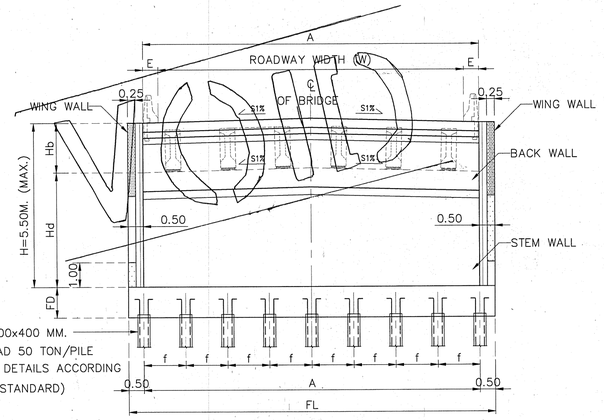

SECTION A-A

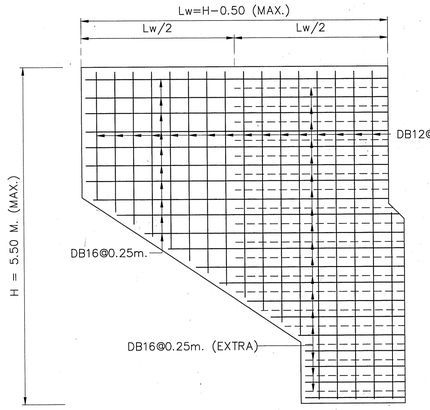

SECTION C-C

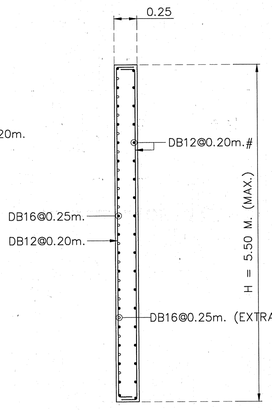

SECTION D-D

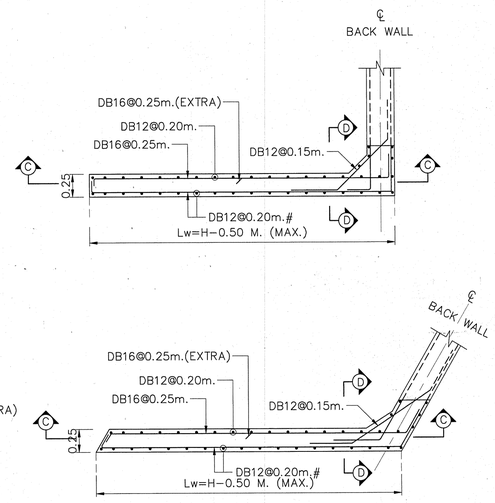

1.SPAN LENGTH 15.00 M. AND 20.00 M.

1.1 DIMENSION OF ABUTMENT

Ln (M.)	W (M.)	NO.OF I-GIRDER (N_I)	H(M.) (MAX)	DIMENSION (M.)						C	
				A	E	S	Hb	Hd	Ts	STRAIGHT	CURVED
15.00 M.	9.00	5	5.50	10.00	0.50	2.00	1.03 *	4.47	0.60	1.00	1.00-1.25
	10.00	6	5.50	11.00	0.50	1.80	1.03 *	4.47	0.60	1.00	1.00-1.25
	11.00	6	5.50	12.00	0.50	2.00	1.03 *	4.47	0.60	1.00	1.00-1.25
	12.00	7	5.50	13.00	0.50	1.83	1.03 *	4.47	0.60	1.00	1.00-1.25
	13.00	7	5.50	14.00	0.50	2.00	1.03 *	4.47	0.60	1.00	1.00-1.25
	14.00	8	5.50	15.00	0.50	1.86	1.03 *	4.47	0.60	1.00	1.00-1.25
	15.00	8	5.50	16.00	0.50	2.00	1.03 *	4.47	0.60	1.00	1.00-1.50
20.00 M.	9.00	5	5.50	10.00	0.50	2.00	1.48 *	4.02	0.60	1.00	1.00-1.50
	10.00	6	5.50	11.00	0.50	1.80	1.48 *	4.02	0.60	1.00	1.00-1.50
	11.00	6	5.50	12.00	0.50	2.00	1.48 *	4.02	0.60	1.00	1.00-1.50
	12.00	7	5.50	13.00	0.50	1.83	1.48 *	4.02	0.60	1.00	1.00-1.50
	13.00	7	5.50	14.00	0.50	2.00	1.48 *	4.02	0.60	1.00	1.00-1.50
	14.00	8	5.50	15.00	0.50	1.86	1.48 *	4.02	0.60	1.00	1.00-1.50
	15.00	8	5.50	16.00	0.50	2.00	1.48 *	4.02	0.60	1.00	1.00-1.50

REMARK ; * = DEPENDS ON DEPTH OF GIRDER

1.2 REBAR IN ABUTMENT

Ln (M.)	W (M.)	SKEW 0-45 DEGREE									
		V1	V2	V3	V4	V5	S1	S2	S3	S4	S5
15.00 M.	9.00-15.00	DB20@0.20	DB20@0.20	DB16@0.20	DB20@0.10	DB16@0.20	DB16@0.20	DB16@0.20	DB16@0.20	DB16@0.20	DB16@0.20
20.00 M.	9.00-15.00	DB20@0.20	DB20@0.20	DB16@0.20	DB20@0.10	DB16@0.20	DB16@0.20	DB16@0.20	DB16@0.20	DB16@0.20	DB16@0.20

1.3 FOUNDATION & PILE

Ln (M.)	W (M.)	PILE SIZING (MM.)	Nc	Nr	NO.OF PILE	FOOTING DIMENSION (M.)					BOTTOM REBAR		TOP REBAR	
						FL	FB	FD	f	G	BF1	BF2	TF1	TF2
15.00 M.	9.00	Ø 400x400	8	2	16	11.00	3.50	1.00	1.46	2.70	DB20@0.15	DB25@0.15	DB20@0.30	DB20@0.30
	10.00	Ø 400x400	9	2	18	12.00	3.50	1.00	1.40	2.70	DB20@0.15	DB25@0.15	DB20@0.30	DB20@0.30
	11.00	Ø 400x400	10	2	20	13.00	3.50	1.00	1.36	2.70	DB20@0.15	DB25@0.15	DB20@0.30	DB20@0.30
	12.00	Ø 400x400	10	2	20	14.00	3.50	1.00	1.47	2.70	DB20@0.15	DB25@0.15	DB20@0.30	DB20@0.30
	13.00	Ø 400x400	11	2	22	15.00	3.50	1.00	1.42	2.70	DB20@0.15	DB25@0.15	DB20@0.30	DB20@0.30
	14.00	Ø 400x400	11	2	22	16.00	3.50	1.00	1.52	2.70	DB20@0.15	DB25@0.15	DB20@0.30	DB20@0.30
	15.00	Ø 400x400	12	2	24	17.00	3.50	1.00	1.47	2.70	DB20@0.15	DB25@0.15	DB20@0.30	DB20@0.30
20.00 M.	9.00	Ø 400x400	9	2	18	11.00	3.50	1.00	1.28	2.70	DB20@0.15	DB25@0.125	DB20@0.30	DB20@0.30
	10.00	Ø 400x400	10	2	20	12.00	3.50	1.00	1.24	2.70	DB20@0.15	DB25@0.125	DB20@0.30	DB20@0.30
	11.00	Ø 400x400	11	2	22	13.00	3.50	1.00	1.22	2.70	DB20@0.15	DB25@0.125	DB20@0.30	DB20@0.30
	12.00	Ø 400x400	12	2	24	14.00	3.50	1.00	1.20	2.70	DB20@0.15	DB25@0.125	DB20@0.30	DB20@0.30
	13.00	Ø 400x400	12	2	24	15.00	3.50	1.00	1.29	2.70	DB20@0.15	DB25@0.125	DB20@0.30	DB20@0.30
	14.00	Ø 400x400	12	2	24	16.00	3.50	1.00	1.38	2.70	DB20@0.15	DB25@0.125	DB20@0.30	DB20@0.30
	15.00	Ø 400x400	14	2	28	17.00	3.50	1.00	1.25	2.70	DB20@0.15	DB25@0.125	DB20@0.30	DB20@0.30

1.4 ADJUST LENGTH FOR SKEW BRIDGE

VALUE OF SEC θ IN CASE OF SKEW BRIDGE (SKEW, θ)										
SKEW ANGLE, θ (DEGREE)	0	5	10	15	20	25	30	35	40	45
SEC θ	1.0000	1.0038	1.0154	1.0353	1.0642	1.1034	1.1547	1.2208	1.3054	1.4142

NOTES :

1. ALL DIMENSIONS SHOWN ARE IN METERS UNLESS OTHERWISE INDICATED.
2. DESIGN LIVE LOAD : HL-93
3. A MINIMUM ULTIMATE COMPRESSIVE STRENGTH FOR A 150x150x150 MM. CUBE AT 28 DAYS AS FOLLOWS:
   A) FOR ABUTMENT AND WINGWALL 35 MPa. (357 KG/CM^2)
   B) FOR FOOTING 35 MPa. (357 KG/CM^2)
   C) FOR SIDEWALK AND BARRIER 35 MPa. (357 KG/CM^2)
4. REBAR SIZES SMALLER THAN 12 MM. SHALL BE TIS 20 GRADE SR 24 PLAIN ROUND BARS, OTHERS SHALL BE TIS 24 GRADE SD 40 DEFORMED BARS UNLESS OTHERWISE INDICATED.
5. R = 0.50 M. FOR THE BRIDGE WITHOUT SIDEWALK (P = 0.00). FOR THE BRIDGE WITH SIDEWALK OF P = 0.50 AND 1.00, R = 0.50 M. AND 1.00 M., RESPECTIVELY.
6. EACH SPREAD FOOTING SHALL BE LOCATED BELOW TO A DEPTH WHERE SCOUR WILL NOT AFFECT CAPACITY, THE MINIMUM ALLOWABLE BEARING CAPACITY OF 0.30 MPa (30 TON/M^2)
7. POROUS BACKFILL AND CRUSHED ROCK MATERIALS SHALL BE SUBMITTED FOR APPROVAL
8. 1" CRUSHED ROCK OR 1" GRAVEL FILL ALONG THE WALL.

REV.	REVISION	SIGNATURE	DATE
REV.1	REVISION 1/2018		JAN 2018

KINGDOM OF THAILAND

MINISTRY OF TRANSPORT

DEPARTMENT OF HIGHWAYS

STANDARD DRAWING

ABUTMENT WITHOUT SIDEWALK (FOR I-GIRDER)
ROADWAY WIDTH 9.00 – 15.00 M., 15.00 M.
AND 20.00 M. SPAN, HEIGHT ≤ 5.50 M.

DESIGNED : D.O.H. & CONSULTANTS	**CHECKED :** BUREAU OF LOCATION & DESIGN		**DATE :** MAR 2018
SUBMITTED : (DIRECTOR OF LOCATION & DESIGN BUREAU)			**SCALE :** AS SHOWN
APPROVED : (FOR DIRECTOR GENERAL)			**DWG NO.** PC-209
			SHEET NO. 269/R1

D:\20141103_Team Group\โปรเจค 2558\09\2045_STANDARD DRAWING DOH\Standard Drawing DOH_61.02.19\แปลนมาตรฐาน(ENG)_Revision 1.2017-JAN2018\ENG\STANDARD FINAL-1-CAD(ENG)\STRUCTURAL WORK\Structural Work-Sec. 1 Bridge Span Not More Than 20.00 M\PC-209(REV01)

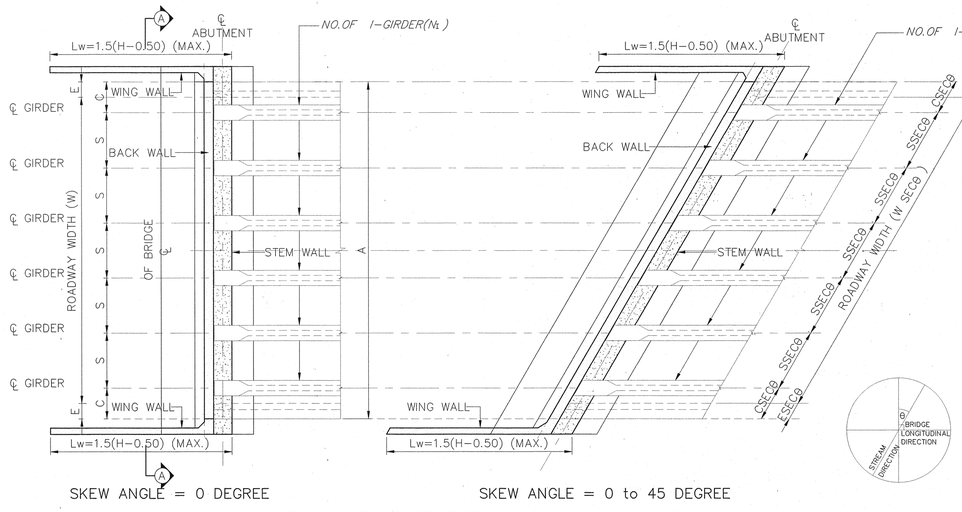

SKEW ANGLE = 0 DEGREE

SKEW ANGLE = 0 to 45 DEGREE

PLAN OF ABUTMENT

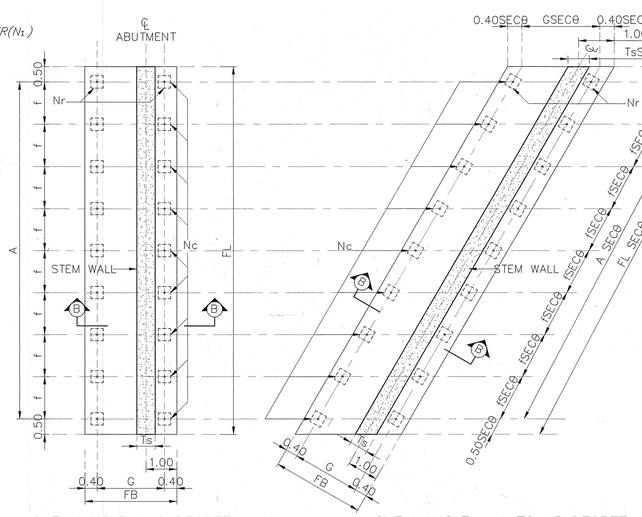

SKEW ANGLE = 0 DEGREE

SKEW ANGLE = 1 TO 45 DEGREE

PLAN OF FOOTING

1.SPAN LENGTH 15.00 M. AND 20.00 M.

1.1 DIMENSION OF ABUTMENT

Ln (M.)	W (M.)	NO.OF I−GIRDER (N_t)	H(M.) (MAX)	DIMENSION (M.)						C	
				A	E	S	Hb	Hd	Ts	STRAIGHT	CURVED
15.00 M.	9.00	5	5.50	10.00	0.50	2.00	1.03 *	4.47	0.60	1.00	1.00−1.25
	10.00	6	5.50	11.00	0.50	1.80	1.03 *	4.47	0.60	1.00	1.00−1.25
	11.00	6	5.50	12.00	0.50	2.00	1.03 *	4.47	0.60	1.00	1.00−1.25
	12.00	7	5.50	13.00	0.50	1.83	1.03 *	4.47	0.60	1.00	1.00−1.25
	13.00	7	5.50	14.00	0.50	2.00	1.03 *	4.47	0.60	1.00	1.00−1.25
	14.00	8	5.50	15.00	0.50	1.86	1.03 *	4.47	0.60	1.00	1.00−1.25
	15.00	8	5.50	16.00	0.50	2.00	1.03 *	4.47	0.60	1.00	1.00−1.50
20.00 M.	9.00	5	5.50	10.00	0.50	2.00	1.48 *	4.02	0.60	1.00	1.00−1.50
	10.00	6	5.50	11.00	0.50	1.80	1.48 *	4.02	0.60	1.00	1.00−1.50
	11.00	6	5.50	12.00	0.50	2.00	1.48 *	4.02	0.60	1.00	1.00−1.50
	12.00	7	5.50	13.00	0.50	1.83	1.48 *	4.02	0.60	1.00	1.00−1.50
	13.00	7	5.50	14.00	0.50	2.00	1.48 *	4.02	0.60	1.00	1.00−1.50
	14.00	8	5.50	15.00	0.50	1.86	1.48 *	4.02	0.60	1.00	1.00−1.50
	15.00	8	5.50	16.00	0.50	2.00	1.48 *	4.02	0.60	1.00	1.00−1.50

REMARK ; * = DEPENDS ON DEPTH OF GIRDER

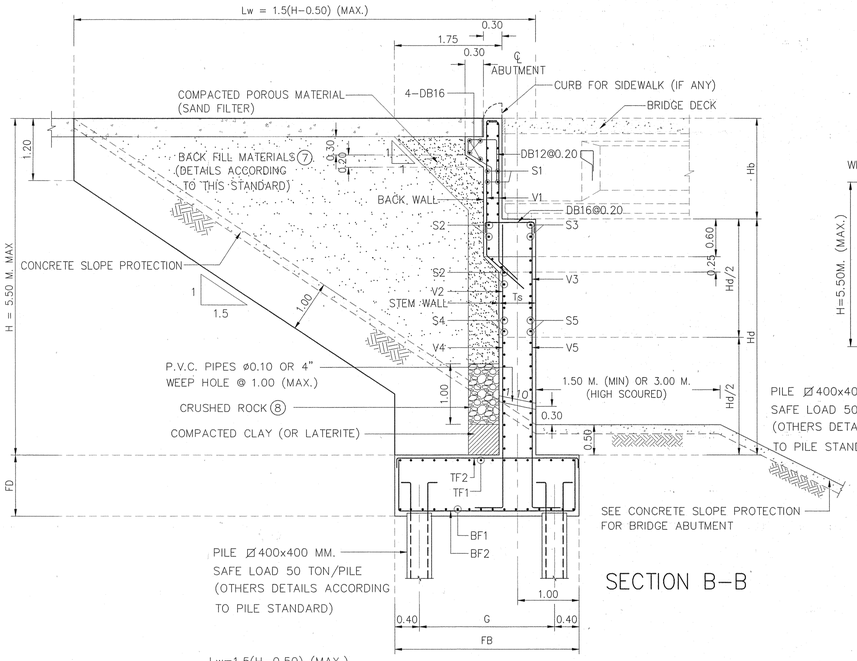

SECTION B−B

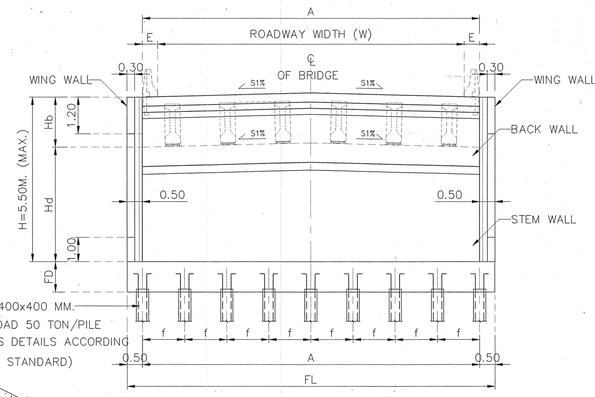

SECTION A−A

1.2 REBAR IN ABUTMENT

Ln (M.)	W (M.)	SKEW 0−45 DEGREE									
		V1	V2	V3	V4	V5	S1	S2	S3	S4	S5
15.00 M.	9.00−15.00	DB20@0.20	DB20@0.20	DB16@0.20	DB20@0.10	DB16@0.20	DB16@0.20	DB16@0.20	DB16@0.20	DB16@0.20	DB16@0.20
20.00 M.	9.00−15.00	DB20@0.20	DB20@0.20	DB16@0.20	DB20@0.10	DB16@0.20	DB16@0.20	DB16@0.20	DB16@0.20	DB16@0.20	DB16@0.20

1.3 FOUNDATION & PILE

Ln (M.)	W (M.)	PILE SIZING (MM.)	Nc	Nr	NO.OF PILE	FOOTING DIMENSION (M.)					BOTTOM REBAR		TOP REBAR	
						FL	FB	FD	f	G	BF1	BF2	TF1	TF2
15.00 M.	9.00	ø 400x400	8	2	16	11.00	3.50	1.00	1.46	2.70	DB20@0.15	DB25@0.15	DB20@0.30	DB20@0.30
	10.00	ø 400x400	9	2	18	12.00	3.50	1.00	1.40	2.70	DB20@0.15	DB25@0.15	DB20@0.30	DB20@0.30
	11.00	ø 400x400	10	2	20	13.00	3.50	1.00	1.36	2.70	DB20@0.15	DB25@0.15	DB20@0.30	DB20@0.30
	12.00	ø 400x400	10	2	20	14.00	3.50	1.00	1.47	2.70	DB20@0.15	DB25@0.15	DB20@0.30	DB20@0.30
	13.00	ø 400x400	11	2	22	15.00	3.50	1.00	1.42	2.70	DB20@0.15	DB25@0.15	DB20@0.30	DB20@0.30
	14.00	ø 400x400	11	2	22	16.00	3.50	1.00	1.52	2.70	DB20@0.15	DB25@0.15	DB20@0.30	DB20@0.30
	15.00	ø 400x400	12	2	24	17.00	3.50	1.00	1.47	2.70	DB20@0.15	DB25@0.15	DB20@0.30	DB20@0.30
20.00 M.	9.00	ø 400x400	9	2	18	11.00	3.50	1.00	1.28	2.70	DB20@0.15	DB25@0.125	DB20@0.30	DB20@0.30
	10.00	ø 400x400	10	2	20	12.00	3.50	1.00	1.24	2.70	DB20@0.15	DB25@0.125	DB20@0.30	DB20@0.30
	11.00	ø 400x400	11	2	22	13.00	3.50	1.00	1.22	2.70	DB20@0.15	DB25@0.125	DB20@0.30	DB20@0.30
	12.00	ø 400x400	12	2	24	14.00	3.50	1.00	1.20	2.70	DB20@0.15	DB25@0.125	DB20@0.30	DB20@0.30
	13.00	ø 400x400	12	2	24	15.00	3.50	1.00	1.29	2.70	DB20@0.15	DB25@0.125	DB20@0.30	DB20@0.30
	14.00	ø 400x400	12	2	24	16.00	3.50	1.00	1.38	2.70	DB20@0.15	DB25@0.125	DB20@0.30	DB20@0.30
	15.00	ø 400x400	14	2	28	17.00	3.50	1.00	1.25	2.70	DB20@0.15	DB25@0.125	DB20@0.30	DB20@0.30

1.4 ADJUST LENGTH FOR SKEW BRIDGE

	VALUE OF SEC θ IN CASE OF SKEW BRIDGE (SKEW, θ)									
SKEW ANGLE, θ (DEGREE)	0	5	10	15	20	25	30	35	40	45
SEC θ	1.0000	1.0038	1.0154	1.0353	1.0642	1.1034	1.1547	1.2208	1.3054	1.4142

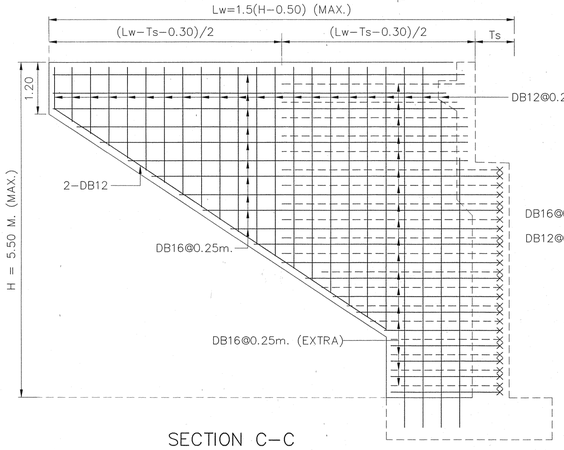

SECTION C−C

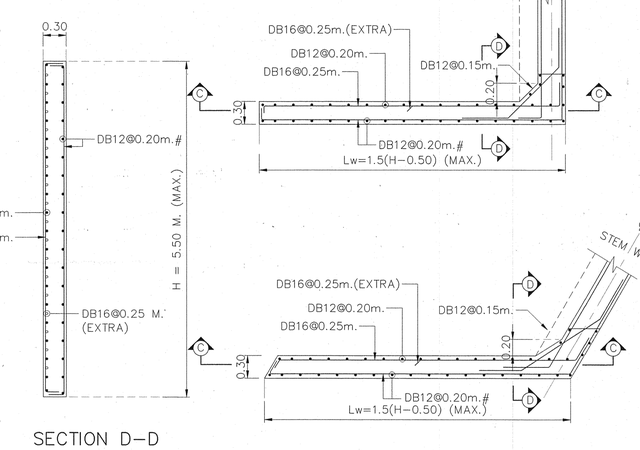

SECTION D−D

NOTES :

1. ALL DIMENSIONS SHOWN ARE IN METERS UNLESS OTHERWISE INDICATED.
2. DESIGN LIVE LOAD : HL−93
3. A MINIMUM ULTIMATE COMPRESSIVE STRENGTH FOR A 150x150x150 MM. CUBE AT 28 DAYS AS FOLLOWS:
   A) FOR ABUTMENT AND WINGWALL 35 MPa. (357 KG/CM^2)
   B) FOR FOOTING 35 MPa. (357 KG/CM^2)
   C) FOR SIDEWALK AND BARRIER 35 MPa. (357 KG/CM^2)
4. REBAR SIZES SMALLER THAN 12 MM. SHALL BE TIS 20 GRADE SR 24 PLAIN ROUND BARS, OTHERS SHALL BE TIS 24 GRADE SD 40 DEFORMED BARS UNLESS OTHERWISE INDICATED.
5. R = 0.50 M. FOR THE BRIDGE WITHOUT SIDEWALK (P = 0.00). FOR THE BRIDGE WITH SIDEWALK OF P = 0.50 AND 1.00, R = 0.50 M. AND 1.00 M., RESPECTIVELY.
6. EACH SPREAD FOOTING SHALL BE LOCATED BELOW TO A DEPTH WHERE SCOUR WILL NOT AFFECT CAPACITY, THE MINIMUM ALLOWABLE BEARING CAPACITY OF 0.30 MPa (30 TON/M^2)
7. POROUS BACKFILL AND CRUSHED ROCK MATERIALS SHALL BE SUBMITTED FOR APPROVAL
8. 1" CRUSHED ROCK OR 1" GRAVEL FILL ALONG THE WALL.

REV.	REVISION	SIGNATURE	DATE
REV.2	REVISION 2/2021		JAN 2021
REV.1	REVISION 1/2018		JAN 2018

KINGDOM OF THAILAND
MINISTRY OF TRANSPORT
DEPARTMENT OF HIGHWAYS

STANDARD DRAWING
ABUTMENT WITHOUT SIDEWALK (FOR I−GIRDER)
ROADWAY WIDTH 9.00 − 15.00 M., 15.00 M. AND 20.00 M. SPAN, HEIGHT ≤ 5.50 M.

DESIGNED : D.O.H. & CONSULTANTS **CHECKED :** BUREAU OF LOCATION & DESIGN **DATE :** OCT 2015

SUBMITTED : (DIRECTOR OF LOCATION & DESIGN BUREAU) **SCALE :** AS SHOWN

APPROVED : (FOR DIRECTOR GENERAL) **DWG NO.** PC−209

SHEET NO. 269/R2

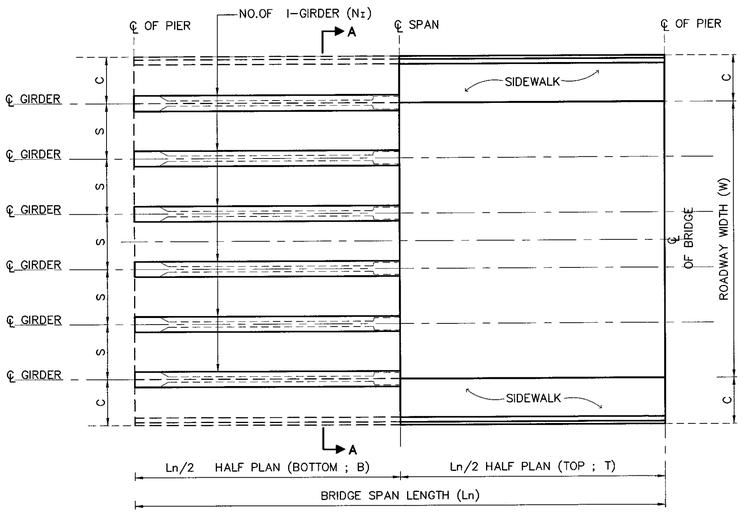

PLAN OF BRIDGE DECK

NOTE :
1. ALL DIMENSIONS SHOWN ARE IN METERS UNLESS OTHERWISE INDICATED
2. LIVE LOADING : VEHICLE LOAD HL-93
3. A MINIMUM ULTIMATE COMPRESSIVE STRENGTH FOR A 150X150X150 MM. CUBE AT 28 DAYS AS FOLLOWS :
   A) FOR COLUMN AND CAP BEAM 35 MPa
   B) FOR FOOTING 35 MPa
4. REBARS SMALLER THAN RB9 MM. SHALL BE TIS 20 GRADE SR 24 PLAIN ROUND BARS, OTHERS SHALL BE TIS 24 GRADE SD40 DEFORMED BARS UNLESS OTHERWISE INDICATED.

1.SPAN LENGHT 15.00 M., HEIGHT ≤ 8.00 M.

Ln (M.)	W (M.)	NO.OF I-GIRDER (N_I)	DIMENSION (M.)								C (SIDEWALK WIDTH)		REBAR COLUMN					
			A1	A2	A3	b	e	S	h1	h2	SW=1.00 M.	SW=1.50 M.	D (M.)	CR1	CR2	ST3	CR3	ST4
15.00 M. SEISMIC LEVEL 1	9.00	6	11.00	1.40	1.80	1.60	1.45	1.80	1.00	1.50	1.00	1.50	1.30	32-DB28	32-DB28	DB12@0.15	32-DB28	DB12@0.30
	10.00	6	12.00	1.50	2.00	1.60	1.45	2.00	1.00	1.50	1.00	1.50	1.30	34-DB28	34-DB28	DB12@0.15	34-DB28	DB12@0.30
	11.00	7	13.00	1.60	2.20	1.60	1.50	1.83	1.00	1.50	1.00	1.50	1.40	38-DB28	38-DB28	DB12@0.15	38-DB28	DB12@0.30
15.00 M. SEISMIC LEVEL 2	9.00	6	11.00	1.40	1.80	1.60	1.45	1.80	1.00	1.50	1.00	1.50	1.30	32-DB28	32-DB28	DB12@0.15	32-DB28	DB12@0.30
	10.00	6	12.00	1.50	2.00	1.60	1.45	2.00	1.00	1.50	1.00	1.50	1.30	34-DB28	34-DB28	DB12@0.15	34-DB28	DB12@0.30
	11.00	7	13.00	1.60	2.20	1.60	1.50	1.83	1.00	1.50	1.00	1.50	1.40	38-DB28	38-DB28	DB12@0.15	38-DB28	DB12@0.30

Ln (M.)	W (M.)	REBAR CAP BEAM						PILE SIZING, PS (MM.)	Nc1	Nc2	NO.OF PILE	FOOTING SKEW 0°-15°					FOOTING SKEW 16°-45°					BOTTOM REBAR		TOP REBAR	
		T1	T2	T3	B1	ST1(STIRRUPS)	ST2(STIRRUPS)					FL	FB	FD	f	g	FL	FB	FD	f	g	BF1	BF2	TF1	TF2
15.00 M. SEISMIC LEVEL 1	9.00	12-DB28	12-DB28	12-DB28	10-DB20	3-DB12@0.25	4-DB12@0.20	Ø 525x525	7	2	14	11.00	2.80	1.85	1.60	1.75	11.00	3.30	1.85	1.60	2.25	DB28@0.12 **	DB25@0.15	DB20@0.18	DB20@0.18
	10.00	14-DB28	14-DB28	14-DB28	10-DB20	3-DB12@0.25	4-DB12@0.20	Ø 525x525	7	2	14	11.00	2.80	2.00	1.60	1.75	11.00	3.30	2.00	1.60	2.25	DB28@0.12 **	DB25@0.15	DB20@0.18	DB20@0.18
	11.00	15-DB28	15-DB28	15-DB28	10-DB20	3-DB12@0.25	4-DB12@0.175	Ø 525x525	8	2	16	13.00	2.80	2.00	1.66	1.75	13.00	3.30	2.00	1.66	2.25	DB28@0.09 **	DB25@0.14	DB20@0.18	DB20@0.18
15.00 M. SEISMIC LEVEL 2	9.00	12-DB28	12-DB28	12-DB28	10-DB20	3-DB12@0.25	4-DB12@0.20	Ø 525x525	7	2	14	11.00	2.80	1.85	1.60	1.75	11.00	3.30	1.85	1.60	2.25	DB28@0.13 **	DB25@0.15	DB20@0.18	DB20@0.18
	10.00	14-DB28	14-DB28	14-DB28	10-DB20	3-DB12@0.25	4-DB12@0.175	Ø 525x525	7	2	14	11.00	2.80	2.00	1.60	1.75	11.00	3.30	2.00	1.60	2.25	DB28@0.12 **	DB25@0.15	DB20@0.18	DB20@0.18
	11.00	15-DB28	15-DB28	15-DB28	10-DB20	3-DB12@0.25	4-DB12@0.175	Ø 525x525	8	2	16	13.00	2.80	2.00	1.66	1.75	13.00	3.30	2.00	1.66	2.25	DB28@0.09 **	DB25@0.14	DB20@0.18	DB20@0.18

REMARK ; ** = 2 LAYERS

2.SPAN LENGHT 20.00 M., HEIGHT ≤ 8.00 M.

Ln (M.)	W (M.)	NO.OF I-GIRDER (N_I)	DIMENSION (M.)								C (SIDEWALK WIDTH)		REBAR COLUMN					
			A1	A2	A3	b	e	S	h1	h2	SW=1.00 M.	SW=1.50 M.	D (M.)	CR1	CR2	ST3	CR3	ST4
20.00 M. SEISMIC LEVEL 1	9.00	6	11.00	1.40	1.80	1.60	1.45	1.80	1.00	1.50	1.00	1.50	1.30	35-DB28	35-DB28	DB12@0.15	35-DB28	DB12@0.30
	10.00	6	12.00	1.50	2.00	1.60	1.50	2.00	1.00	1.50	1.00	1.50	1.40	36-DB28	36-DB28	DB12@0.15	36-DB28	DB12@0.30
	11.00	7	13.00	1.60	2.20	1.60	1.55	1.83	1.00	1.50	1.00	1.50	1.50	37-DB28	37-DB28	DB12@0.15	37-DB28	DB12@0.30
20.00 M. SEISMIC LEVEL 2	9.00	6	11.00	1.40	1.80	1.60	1.45	1.80	1.00	1.50	1.00	1.50	1.30	35-DB28	35-DB28	DB12@0.15	35-DB28	DB12@0.30
	10.00	6	12.00	1.50	2.00	1.60	1.50	2.00	1.00	1.50	1.00	1.50	1.40	36-DB28	36-DB28	DB12@0.15	36-DB28	DB12@0.30
	11.00	7	13.00	1.60	2.20	1.60	1.55	1.83	1.00	1.50	1.00	1.50	1.50	37-DB28	37-DB28	DB12@0.15	37-DB28	DB12@0.30

Ln (M.)	W (M.)	REBAR CAP BEAM						PILE SIZING, PS (MM.)	Nc1	Nc2	NO.OF PILE	FOOTING SKEW 0°-15°					FOOTING SKEW 16°-45°				
		T1	T2	T3	B1	ST1(STIRRUPS)	ST2(STIRRUPS)					FL	FB	FD	f	g	FL	FB	FD	f	g
20.00 M. SEISMIC LEVEL 1	9.00	14-DB28	14-DB28	14-DB28	10-DB20	3-DB12@0.25	4-DB12@0.125	Ø 525x525	8	2	16	13.00	2.80	1.85	1.66	1.75	13.00	3.30	1.85	1.66	2.25
	10.00	15-DB28	15-DB28	15-DB28	12-DB20	3-DB12@0.25	4-DB12@0.125	Ø 525x525	8	2	16	13.00	2.80	2.00	1.66	1.75	13.00	3.30	2.00	1.66	2.25
	11.00	18-DB28	18-DB28	18-DB28	12-DB20	3-DB12@0.25	5-DB12@0.125	Ø 650x650	6	2	12	12.00	3.25	2.00	2.12	1.95	12.00	3.75	2.00	2.12	2.45
20.00 M. SEISMIC LEVEL 2	9.00	14-DB28	14-DB28	14-DB28	10-DB20	3-DB12@0.25	4-DB12@0.125	Ø 525x525	8	2	16	13.00	2.80	1.85	1.66	1.75	13.00	3.30	1.85	1.66	2.25
	10.00	15-DB28	15-DB28	15-DB28	12-DB20	3-DB12@0.25	4-DB12@0.125	Ø 525x525	8	2	16	13.00	2.80	1.85	1.66	1.75	13.00	3.30	1.85	1.66	2.25
	11.00	18-DB28	18-DB28	18-DB28	12-DB20	3-DB12@0.25	5-DB12@0.125	Ø 650x650	6	2	12	12.00	3.25	1.85	2.00	1.95	12.00	3.75	1.85	2.00	2.45

Ln (M.)	W (M.)	BOTTOM REBAR		TOP REBAR	
		BF1	BF2	TF1	TF2
20.00 M. SEISMIC LEVEL 1	9.00	DB28@0.09 **	DB25@0.14	DB20@0.18	DB20@0.19
	10.00	DB28@0.09 **	DB25@0.14	DB20@0.18	DB20@0.19
	11.00	DB28@0.10 **	DB25@0.14	DB20@0.18	DB20@0.19
20.00 M. SEISMIC LEVEL 2	9.00	DB28@0.09 **	DB25@0.14	DB20@0.18	DB20@0.19
	10.00	DB28@0.09 **	DB25@0.14	DB20@0.18	DB20@0.19
	11.00	DB28@0.10 **	DB25@0.14	DB20@0.18	DB20@0.19

REMARK ; ** = 2 LAYERS

ADJUST LENGTH FOR SKEW BRIDGE

VALUE OF SEC θ IN CASE OF SKEW BRIDGE (SKEW, θ)					
SKEW ANGLE, θ (DEGREE)	0	5	10	15	20
SEC θ	1.0000	1.0038	1.0154	1.0353	1.0642
SKEW ANGLE, θ (DEGREE)	25	30	35	40	45
SEC θ	1.1034	1.1547	1.2208	1.3054	1.4142

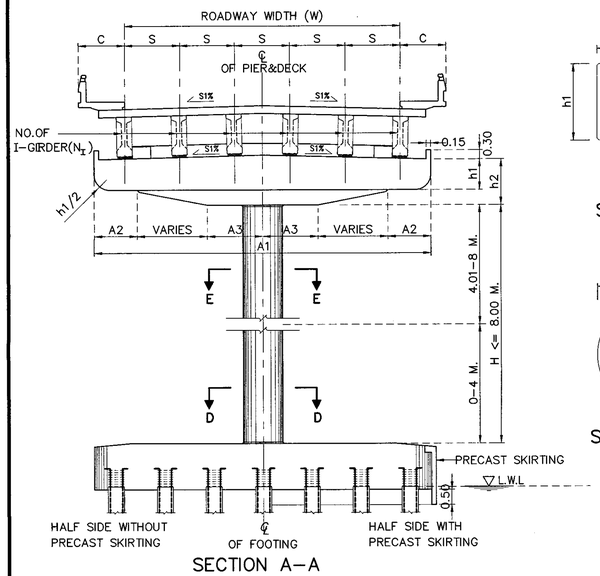

SECTION A-A

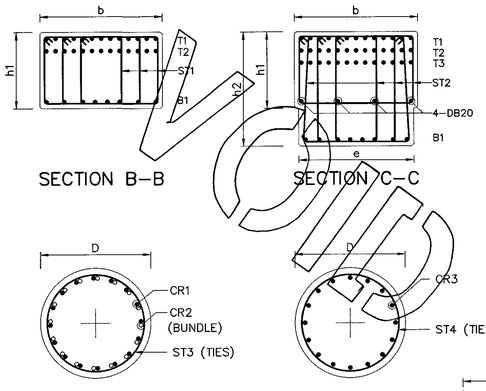

SECTION D-D SECTION E-E

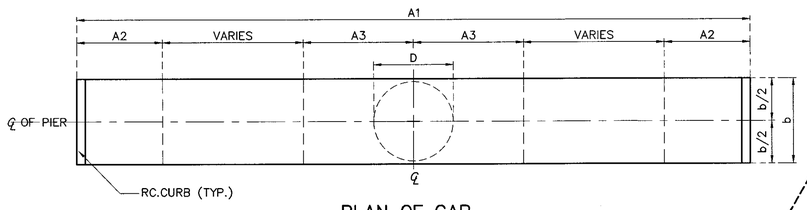

PLAN OF CAP

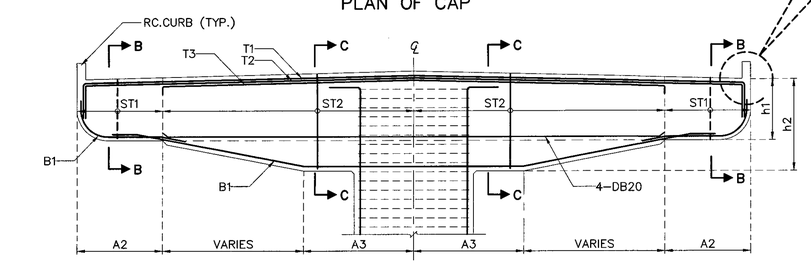

SECTION OF CAP

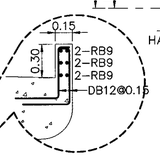

CURB DETAIL

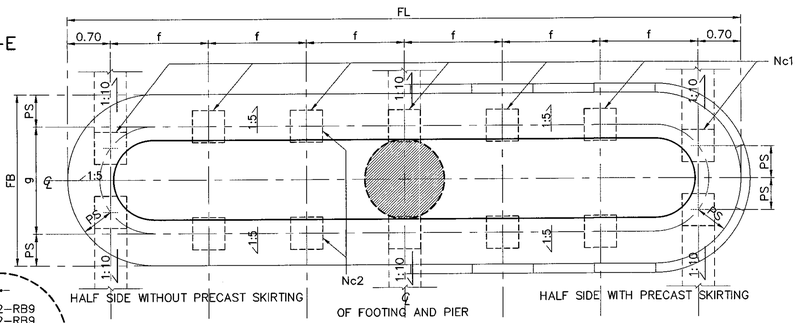

PLAN OF FOOTING

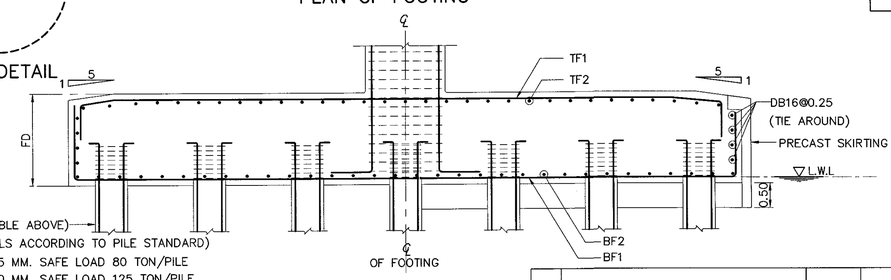

PILE (FROM TABLE ABOVE)
(OTHERS DETAILS ACCORDING TO PILE STANDARD)
PILE Ø 525x525 MM. SAFE LOAD 80 TON/PILE
PILE Ø 650x650 MM. SAFE LOAD 125 TON/PILE

SECTION OF FOOTING

REF.	REVISION	SIGNATURE	DATE

KINGDOM OF THAILAND

MINISTRY OF TRANSPORT
DEPARTMENT OF HIGHWAYS

STANDARD DRAWING

SINGLE COLUMN PIER WITH SIDEWALK (FOR I-GIRDER)
ROADWAY WIDTH 9.00 - 11.00 M., 15.00 M.
AND 20.00 M. SPAN, HEIGHT ≤ 8.00 M.

DESIGNED : D.O.H. & CONSULTANTS	CHECKED : BUREAU OF LOCATION & DESIGN	DATE : OCT 2015
SUBMITTED : (DIRECTOR OF LOCATION & DESIGN BUREAU)		SCALE : AS SHOWN
APPROVED : (FOR DIRECTOR GENERAL)		DWG NO. PC-210
		SHEET NO. 270

D:\std dwg 2015\PC-210(REV00)

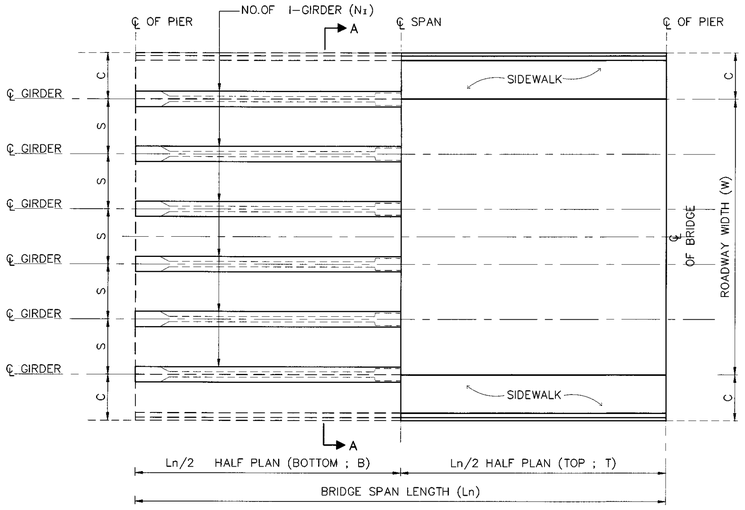

PLAN OF BRIDGE DECK

NOTES :

1. ALL DIMENSIONS SHOWN ARE IN METERS UNLESS OTHERWISE INDICATED.
2. DESIGN LIVE LOAD : HL-93
3. A MINIMUM ULTIMATE COMPRESSIVE STRENGTH FOR A 150x150x150 MM. CUBE AT 28 DAYS AS FOLLOWS:
   - A) FOR ABUTMENT AND WINGWALL 35 MPa. (357 KG/CM^2)
   - B) FOR FOOTING 35 MPa. (357 KG/CM^2)
   - C) FOR SIDEWALK AND BARRIER 35 MPa. (357 KG/CM^2)
4. REBAR SIZES SMALLER THAN 12 MM. SHALL BE TIS 20 GRADE SR 24 PLAIN ROUND BARS, OTHERS SHALL BE TIS 24 GRADE SD 40 DEFORMED BARS UNLESS OTHERWISE INDICATED.

1.SPAN LENGHT 15.00 M., HEIGHT ≤ 8.00 M.

Ln (M.)	W (M.)	NO.OF I-GIRDER (N_I)	DIMENSION (M.)								C (SIDEWALK WIDTH)		REBAR COLUMN					
			A1	A2	A3	b	e	S	h1	h2	SW=1.00 M.	SW=1.50 M.	D (M.)	CR1	CR2	ST3	CR3	ST4
15.00 M. SEISMIC LEVEL 1	9.00	6	11.00	1.40	1.80	1.60	1.45	1.80	1.00	1.50	1.00	1.50	1.30	32-DB28	32-DB28	DB12@0.15	32-DB28	DB12@0.30
	10.00	6	12.00	1.50	2.00	1.60	1.45	2.00	1.00	1.50	1.00	1.50	1.30	34-DB28	34-DB28	DB12@0.15	34-DB28	DB12@0.30
	11.00	7	13.00	1.60	2.20	1.60	1.50	1.83	1.00	1.50	1.00	1.50	1.40	38-DB28	38-DB28	DB12@0.15	38-DB28	DB12@0.30
15.00 M. SEISMIC LEVEL 2	9.00	6	11.00	1.40	1.80	1.60	1.45	1.80	1.00	1.50	1.00	1.50	1.30	32-DB28	32-DB28	DB12@0.15	32-DB28	DB12@0.30
	10.00	6	12.00	1.50	2.00	1.60	1.45	2.00	1.00	1.50	1.00	1.50	1.30	34-DB28	34-DB28	DB12@0.15	34-DB28	DB12@0.30
	11.00	7	13.00	1.60	2.20	1.60	1.50	1.83	1.00	1.50	1.00	1.50	1.40	38-DB28	38-DB28	DB12@0.15	38-DB28	DB12@0.30

Ln (M.)	W (M.)	REBAR CAP BEAM						PILE SIZING, PS (MM.)	Nc1	Nc2	NO.OF PILE	FOOTING SKEW 0°-15°					FOOTING SKEW 16°-45°					BOTTOM REBAR		TOP REBAR	
		T1	T2	T3	B1	ST1(STIRRUPS)	ST2(STIRRUPS)					FL	FB	FD	f	g	FL	FB	FD	f	g	BF1	BF2	TF1	TF2
15.00 M. SEISMIC LEVEL 1	9.00	12-DB28	12-DB28	12-DB28	10-DB20	3-DB12@0.25	4-DB12@0.20	Ø 525x525	7	2	14	11.00	2.80	1.85	1.60	1.75	11.00	3.30	1.85	1.60	2.25	DB28@0.125 **	DB25@0.15	DB20@0.18	DB20@0.18
	10.00	14-DB28	14-DB28	14-DB28	10-DB20	3-DB12@0.25	4-DB12@0.20	Ø 525x525	7	2	14	11.00	2.80	2.00	1.60	1.75	11.00	3.30	2.00	1.60	2.25	DB28@0.12 **	DB25@0.15	DB20@0.18	DB20@0.18
	11.00	15-DB28	15-DB28	15-DB28	10-DB20	3-DB12@0.25	4-DB12@0.175	Ø 525x525	8	2	16	13.00	2.80	2.00	1.66	1.75	13.00	3.30	2.00	1.66	2.25	DB28@0.09 **	DB25@0.14	DB20@0.18	DB20@0.18
15.00 M. SEISMIC LEVEL 2	9.00	12-DB28	12-DB28	12-DB28	10-DB20	3-DB12@0.25	4-DB12@0.20	Ø 525x525	7	2	14	11.00	2.80	1.85	1.60	1.75	11.00	3.30	1.85	1.60	2.25	DB28@0.125 **	DB25@0.15	DB20@0.18	DB20@0.18
	10.00	14-DB28	14-DB28	14-DB28	10-DB20	3-DB12@0.25	4-DB12@0.175	Ø 525x525	7	2	14	11.00	2.80	2.00	1.60	1.75	11.00	3.30	2.00	1.60	2.25	DB28@0.12 **	DB25@0.15	DB20@0.18	DB20@0.18
	11.00	15-DB28	15-DB28	15-DB28	10-DB20	3-DB12@0.25	4-DB12@0.175	Ø 525x525	8	2	16	13.00	2.80	2.00	1.66	1.75	13.00	3.30	2.00	1.66	2.25	DB28@0.09 **	DB25@0.14	DB20@0.18	DB20@0.18

REMARK ; ** = 2 LAYERS

2.SPAN LENGHT 20.00 M., HEIGHT ≤ 8.00 M.

Ln (M.)	W (M.)	NO.OF I-GIRDER (N_I)	DIMENSION (M.)								C (SIDEWALK WIDTH)		REBAR COLUMN					
			A1	A2	A3	b	e	S	h1	h2	SW=1.00 M.	SW=1.50 M.	D (M.)	CR1	CR2	ST3	CR3	ST4
20.00 M. SEISMIC LEVEL 1	9.00	6	11.00	1.40	1.80	1.60	1.45	1.80	1.00	1.50	1.00	1.50	1.30	35-DB28	35-DB28	DB12@0.15	35-DB28	DB12@0.30
	10.00	6	12.00	1.50	2.00	1.60	1.50	2.00	1.00	1.50	1.00	1.50	1.40	36-DB28	36-DB28	DB12@0.15	36-DB28	DB12@0.30
	11.00	7	13.00	1.60	2.20	1.60	1.55	1.83	1.00	1.50	1.00	1.50	1.50	37-DB28	37-DB28	DB12@0.15	37-DB28	DB12@0.30
20.00 M. SEISMIC LEVEL 2	9.00	6	11.00	1.40	1.80	1.60	1.45	1.80	1.00	1.50	1.00	1.50	1.30	35-DB28	35-DB28	DB12@0.15	35-DB28	DB12@0.30
	10.00	6	12.00	1.50	2.00	1.60	1.50	2.00	1.00	1.50	1.00	1.50	1.40	36-DB28	36-DB28	DB12@0.15	36-DB28	DB12@0.30
	11.00	7	13.00	1.60	2.20	1.60	1.55	1.83	1.00	1.50	1.00	1.50	1.50	37-DB28	37-DB28	DB12@0.15	37-DB28	DB12@0.30

Ln (M.)	W (M.)	REBAR CAP BEAM						PILE SIZING, PS (MM.)	Nc1	Nc2	NO.OF PILE	FOOTING SKEW 0°-15°					FOOTING SKEW 16°-45°				
		T1	T2	T3	B1	ST1(STIRRUPS)	ST2(STIRRUPS)					FL	FB	FD	f	g	FL	FB	FD	f	g
20.00 M. SEISMIC LEVEL 1	9.00	14-DB28	14-DB28	14-DB28	10-DB20	3-DB12@0.25	4-DB12@0.125	Ø 525x525	8	2	16	13.00	2.80	1.85	1.66	1.75	13.00	3.30	1.85	1.66	2.25
	10.00	15-DB28	15-DB28	15-DB28	12-DB20	3-DB12@0.25	4-DB12@0.125	Ø 525x525	8	2	16	13.00	2.80	2.00	1.66	1.75	13.00	3.30	1.85	1.66	2.25
	11.00	18-DB28	18-DB28	18-DB28	12-DB20	3-DB12@0.25	5-DB12@0.125	Ø 525x525	6	2	12	12.00	3.25	2.00	2.12	1.95	12.00	3.75	2.00	2.12	2.45
20.00 M. SEISMIC LEVEL 2	9.00	14-DB28	14-DB28	14-DB28	10-DB20	3-DB12@0.25	4-DB12@0.125	Ø 525x525	8	2	16	13.00	2.80	1.85	1.66	1.75	13.00	3.30	1.85	1.66	2.25
	10.00	15-DB28	15-DB28	15-DB28	12-DB20	3-DB12@0.25	4-DB12@0.125	Ø 525x525	8	2	16	13.00	2.80	1.85	1.66	1.75	13.00	3.30	1.85	1.66	2.25
	11.00	18-DB28	18-DB28	18-DB28	12-DB20	3-DB12@0.25	5-DB12@0.125	Ø 525x525	6	2	12	12.00	3.25	1.85	2.00	1.95	12.00	3.75	2.00	2.00	2.45

Ln (M.)	W (M.)	BOTTOM REBAR		TOP REBAR	
		BF1	BF2	TF1	TF2
20.00 M. SEISMIC LEVEL 1	9.00	DB28@0.09 **	DB25@0.14	DB20@0.18	DB20@0.19
	10.00	DB28@0.09 **	DB25@0.14	DB20@0.18	DB20@0.19
	11.00	DB28@0.10 **	DB25@0.14	DB20@0.18	DB20@0.19
20.00 M. SEISMIC LEVEL 2	9.00	DB28@0.09 **	DB25@0.14	DB20@0.18	DB20@0.19
	10.00	DB28@0.09 **	DB25@0.14	DB20@0.18	DB20@0.19
	11.00	DB28@0.10 **	DB25@0.14	DB20@0.18	DB20@0.19

REMARK ; ** = 2 LAYERS

ADJUST LENGTH FOR SKEW BRIDGE

VALUE OF SEC θ IN CASE OF SKEW BRIDGE (SKEW, θ)					
SKEW ANGLE, θ (DEGREE)	0	5	10	15	20
SEC θ	1.0000	1.0038	1.0154	1.0353	1.0642
SKEW ANGLE, θ (DEGREE)	25	30	35	40	45
SEC θ	1.1034	1.1547	1.2208	1.3054	1.4142

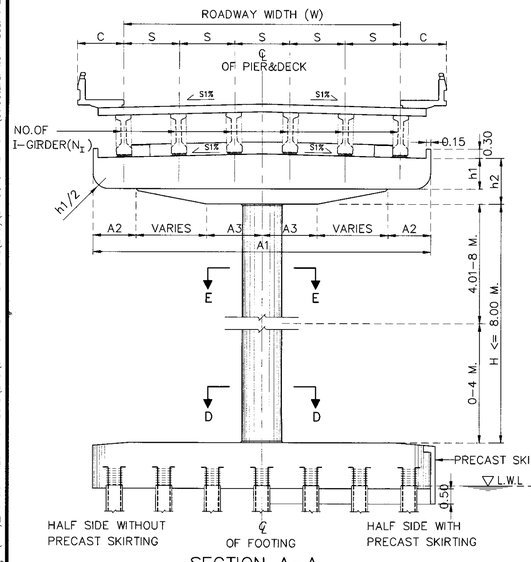

SECTION A-A

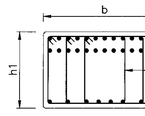

SECTION B-B

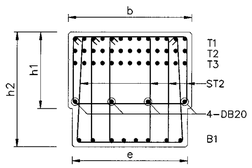

SECTION C-C

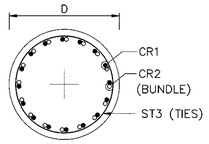

SECTION D-D

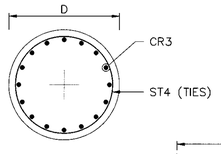

SECTION E-E

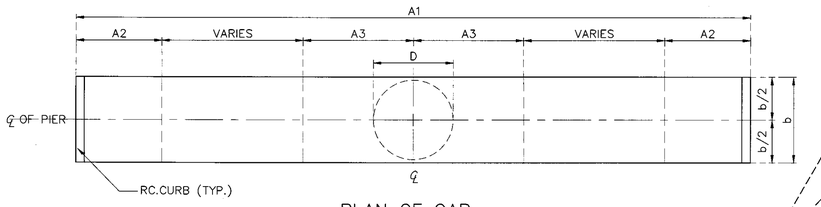

PLAN OF CAP

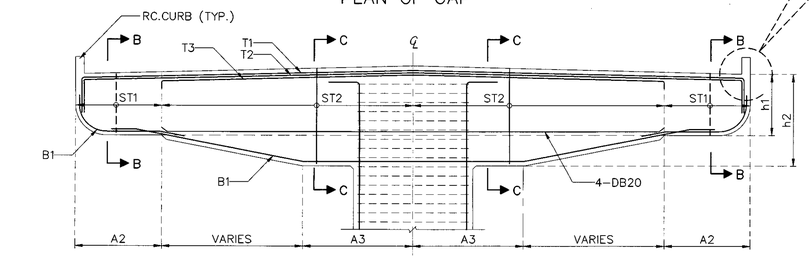

SECTION OF CAP

CURB DETAIL

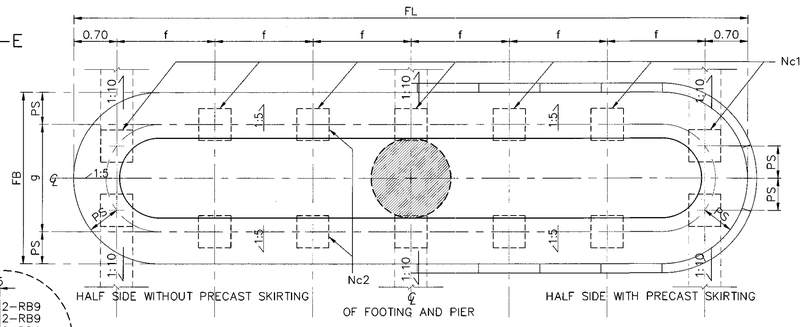

PLAN OF FOOTING

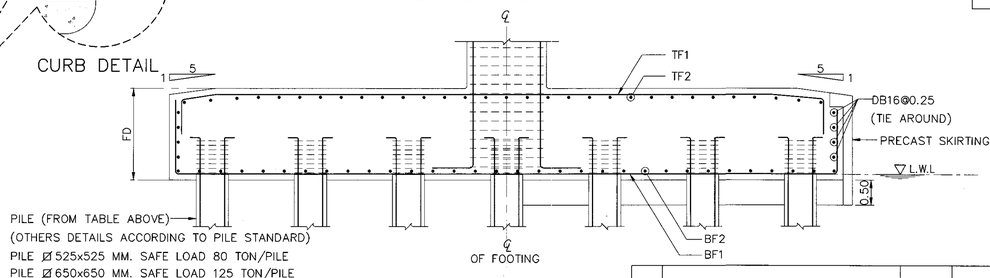

SECTION OF FOOTING

REV.	REVISION	SIGNATURE	DATE
REV.1	REVISION 1/2018		JAN 2018

KINGDOM OF THAILAND

MINISTRY OF TRANSPORT

DEPARTMENT OF HIGHWAYS

STANDARD DRAWING

SINGLE COLUMN PIER WITH SIDEWALK (FOR I-GIRDER)
ROADWAY WIDTH 9.00 - 11.00 M., 15.00 M.
AND 20.00 M. SPAN, HEIGHT ≤ 8.00 M.

DESIGNED : D.O.H. & CONSULTANTS	**CHECKED :** BUREAU OF LOCATION & DESIGN	**DATE :** MAR 2018
SUBMITTED : (DIRECTOR OF LOCATION & DESIGN BUREAU)		**SCALE :** AS SHOWN
APPROVED : (FOR DIRECTOR GENERAL)		**DWG NO.** PC-210
		SHEET NO. 270/R1

D:\2014\103_Team Group\11 2558\10P2045_STANDARD DRAWING DOH\Standard Drawing DOH_61.02.19\แก้ไขตามที่ปรึกษา(ม.ค.61)_Revision 1.2017-JAN2018\ENG\STANDARD FINAL-1-CAD(ENG)\STRUCTURAL WORK\Structural Work-Sec. 1 Bridge Span Not More Than 20.00 M\PC-210(REV01)

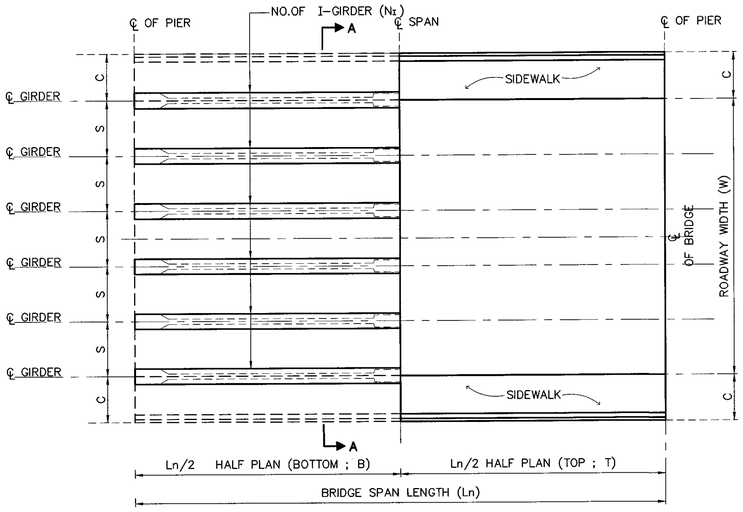

PLAN OF BRIDGE DECK

NOTE :
1. ALL DIMENSIONS SHOWN ARE IN METERS UNLESS OTHERWISE INDICATED
2. LIVE LOADING : VEHICLE LOAD HL-93
3. A MINIMUM ULTIMATE COMPRESSIVE STRENGTH FOR A 150X150X150 MM. CUBE AT 28 DAYS AS FOLLOWS :
   A) FOR COLUMN AND CAP BEAM 35 MPa
   B) FOR FOOTING 35 MPa
4. REBARS SMALLER THAN RB9 MM. SHALL BE TIS 20 GRADE SR 24 PLAIN ROUND BARS, OTHERS SHALL BE TIS 24 GRADE SD40 DEFORMED BARS UNLESS OTHERWISE INDICATED.

1.SPAN LENGTH 15.00 M., HEIGHT ≤ 8.00 M.

Ln (M.)	W (M.)	NO.OF I-GIRDER (N_I)	DIMENSION (M.) A1	A2	A3	b	e	S	h1	h2	C (SIDEWALK WIDTH) SW=1.00 M.	SW=1.50 M.	REBAR COLUMN Dx1.5D(M.)	CR1	CR2	ST3	CR3	ST4
15.00 M. SEISMIC LEVEL 1	12.00	7	14.00	1.70	2.30	1.80	1.60	2.00	1.00	1.70	1.00	1.50	1.40x2.10	48-DB28	–	DB12@0.15	44-DB28	DB12@0.30
	13.00	8	15.00	1.80	2.50	1.80	1.60	1.86	1.00	1.70	1.00	1.50	1.40x2.10	60-DB28	–	DB12@0.15	50-DB28	DB12@0.30
	14.00	8	16.00	2.00	2.70	1.80	1.60	2.00	1.00	1.70	1.00	1.50	1.40x2.10	60-DB28	–	DB12@0.15	50-DB28	DB12@0.30
	15.00	8	16.00	2.00	2.70	1.80	1.60	2.00	1.00	1.70	1.00	–	1.40x2.10	60-DB28	–	DB12@0.15	50-DB28	DB12@0.30
15.00 M. SEISMIC LEVEL 2	12.00	7	14.00	1.70	2.30	1.80	1.60	2.00	1.00	1.70	1.00	1.50	1.40x2.10	48-DB28	–	DB12@0.15	44-DB28	DB12@0.30
	13.00	8	15.00	1.80	2.50	1.80	1.60	1.86	1.00	1.70	1.00	1.50	1.40x2.10	60-DB28	–	DB12@0.15	50-DB28	DB12@0.30
	14.00	8	16.00	2.00	2.70	1.80	1.60	2.00	1.00	1.70	1.00	1.50	1.40x2.10	60-DB28	–	DB12@0.15	50-DB28	DB12@0.30
	15.00	8	16.00	2.00	2.70	1.80	1.60	2.00	1.00	1.70	1.00	–	1.40x2.10	60-DB28	–	DB12@0.15	50-DB28	DB12@0.30

Ln (M.)	W (M.)	REBAR CAP BEAM T1	T2	T3	B1	ST1(STIRRUPS)	ST2(STIRRUPS)	PILE SIZING, PS (MM.)	Nc1	Nc2	NO.OF PILE	FOOTING SKEW 0°-15° FL	FB	FD	f	g	FOOTING SKEW 16°-45° FL	FB	FD	f	g	BOTTOM REBAR BF1	BF2	TOP REBAR TF1	TF2
15.00 M. SEISMIC LEVEL 1	12.00	15-DB28	15-DB28	15-DB28	10-DB20	3-DB12@0.25	4-DB12@0.175	Ø 525x525	8	2	16	13.00	2.80	2.00	1.66	1.75	13.00	3.30	2.00	1.66	2.25	DB28@0.10 **	DB25@0.14	DB20@0.18	DB20@0.18
	13.00	18-DB28	18-DB28	18-DB28	12-DB20	3-DB12@0.25	4-DB12@0.150	Ø 525x525	9	2	18	15.00	2.80	2.20	1.70	1.75	15.00	3.30	2.20	1.70	2.25	DB28@0.09 **	DB25@0.13	DB20@0.16	DB20@0.16
	14.00	18-DB28	18-DB28	18-DB28	12-DB20	3-DB12@0.25	4-DB12@0.125	Ø 525x525	9	2	18	15.00	2.80	2.20	1.70	1.75	15.00	3.30	2.20	1.70	2.25	DB28@0.08 **	DB25@0.13	DB20@0.16	DB20@0.16
	15.00	18-DB28	18-DB28	18-DB28	12-DB20	3-DB12@0.25	4-DB12@0.125	Ø 525x525	9	2	18	15.00	2.80	2.20	1.70	1.75	15.00	3.30	2.20	1.70	2.25	DB28@0.08 **	DB25@0.13	DB20@0.16	DB20@0.16
15.00 M. SEISMIC LEVEL 2	12.00	15-DB28	15-DB28	15-DB28	10-DB20	3-DB12@0.25	4-DB12@0.175	Ø 525x525	8	2	16	13.00	2.80	2.00	1.66	1.75	13.00	3.30	2.00	1.66	2.25	DB28@0.10 **	DB25@0.14	DB20@0.18	DB20@0.18
	13.00	18-DB28	18-DB28	18-DB28	12-DB20	3-DB12@0.25	4-DB12@0.150	Ø 525x525	9	2	18	15.00	2.80	2.20	1.70	1.75	15.00	3.30	2.20	1.70	2.25	DB28@0.09 **	DB25@0.13	DB20@0.16	DB20@0.16
	14.00	18-DB28	18-DB28	18-DB28	12-DB20	3-DB12@0.25	4-DB12@0.125	Ø 525x525	9	2	18	15.00	2.80	2.20	1.70	1.75	15.00	3.30	2.20	1.70	2.25	DB28@0.08 **	DB25@0.13	DB20@0.16	DB20@0.16
	15.00	18-DB28	18-DB28	18-DB28	12-DB20	3-DB12@0.25	4-DB12@0.125	Ø 525x525	9	2	18	15.00	2.80	2.20	1.70	1.75	15.00	3.30	2.20	1.70	2.25	DB28@0.08 **	DB25@0.13	DB20@0.16	DB20@0.16

REMARK ; ** = 2 LAYERS

2.SPAN LENGTH 20.00 M., HEIGHT ≤ 8.00 M.

Ln (M.)	W (M.)	NO.OF I-GIRDER (N_I)	DIMENSION (M.) A1	A2	A3	b	e	S	h1	h2	C (SIDEWALK WIDTH) SW=1.00 M.	SW=1.50 M.	REBAR COLUMN Dx1.5D(M.)	CR1	CR2	ST3	CR3	ST4
20.00 M. SEISMIC LEVEL 1	12.00	7	14.00	1.70	2.30	1.80	1.60	2.00	1.00	1.70	1.00	1.50	1.40x2.10	48-DB28	–	DB12@0.15	44-DB28	DB12@0.30
	13.00	8	15.00	1.80	2.50	1.80	1.60	1.86	1.00	1.70	1.00	1.50	1.40x2.10	60-DB28	–	DB12@0.15	50-DB28	DB12@0.30
	14.00	8	16.00	2.00	2.70	1.80	1.60	2.00	1.00	1.70	1.00	1.50	1.40x2.10	68-DB28	–	DB12@0.15	56-DB28	DB12@0.30
	15.00	8	16.00	2.00	2.70	1.80	1.60	2.00	1.00	1.70	1.00	–	1.40x2.10	68-DB28	–	DB12@0.15	56-DB28	DB12@0.30
20.00 M. SEISMIC LEVEL 2	12.00	7	14.00	1.70	2.30	1.80	1.60	2.00	1.00	1.70	1.00	1.50	1.40x2.10	48-DB28	–	DB12@0.15	44-DB28	DB12@0.30
	13.00	8	15.00	1.80	2.50	1.80	1.60	1.86	1.00	1.70	1.00	1.50	1.40x2.10	60-DB28	–	DB12@0.15	50-DB28	DB12@0.30
	14.00	8	16.00	2.00	2.70	1.80	1.60	2.00	1.00	1.70	1.00	1.50	1.40x2.10	68-DB28	–	DB12@0.15	56-DB28	DB12@0.30
	15.00	8	16.00	2.00	2.70	1.80	1.60	2.00	1.00	1.70	1.00	–	1.40x2.10	68-DB28	–	DB12@0.15	56-DB28	DB12@0.30

Ln (M.)	W (M.)	REBAR CAP BEAM T1	T2	T3	B1	ST1(STIRRUPS)	ST2(STIRRUPS)	PILE SIZING, PS (MM.)	Nc1	Nc2	NO.OF PILE	FOOTING SKEW 0°-15° FL	FB	FD	f	g	FOOTING SKEW 16°-45° FL	FB	FD	f	g
20.00 M. SEISMIC LEVEL 1	12.00	18-DB28	18-DB28	18-DB28	12-DB20	3-DB12@0.25	5-DB12@0.125	Ø 650x650	6	2	12	12.00	3.25	2.00	2.12	1.95	12.00	3.75	2.00	2.12	2.45
	13.00	19-DB28	19-DB28	19-DB28	12-DB20	3-DB12@0.25	5-DB12@0.125	Ø 650x650	7	2	14	14.00	3.25	2.20	2.10	1.95	14.00	3.75	2.20	2.10	2.45
	14.00	21-DB28	21-DB28	21-DB28	12-DB20	3-DB12@0.25	5-DB12@0.125	Ø 650x650	7	2	14	14.00	3.25	2.20	2.10	1.95	14.00	3.75	2.20	2.10	2.45
	15.00	21-DB28	21-DB28	21-DB28	12-DB20	3-DB12@0.25	5-DB12@0.125	Ø 650x650	7	2	14	14.00	3.25	2.00	2.00	1.95	14.00	3.75	2.00	2.00	2.45
20.00 M. SEISMIC LEVEL 2	12.00	18-DB28	18-DB28	18-DB28	12-DB20	3-DB12@0.25	5-DB12@0.125	Ø 650x650	6	2	12	12.00	3.25	2.00	2.12	1.95	12.00	3.75	2.00	2.12	2.45
	13.00	19-DB28	19-DB28	19-DB28	12-DB20	3-DB12@0.25	5-DB12@0.125	Ø 650x650	7	2	14	14.00	3.25	2.20	2.10	1.95	14.00	3.75	2.20	2.10	2.45
	14.00	21-DB28	21-DB28	21-DB28	12-DB20	3-DB12@0.25	5-DB12@0.125	Ø 650x650	7	2	14	14.00	3.25	2.20	2.10	1.95	14.00	3.75	2.20	2.10	2.45
	15.00	21-DB28	21-DB28	21-DB28	12-DB20	3-DB12@0.25	5-DB12@0.125	Ø 650x650	7	2	14	14.00	3.25	2.20	2.00	1.95	14.00	3.75	2.20	2.00	2.45

Ln (M.)	W (M.)	BOTTOM REBAR BF1	BF2	TOP REBAR TF1	TF2
20.00 M. SEISMIC LEVEL 1	12.00	DB28@0.12 **	DB25@0.13	DB20@0.16	DB20@0.17
	13.00	DB28@0.09 **	DB25@0.13	DB20@0.16	DB20@0.17
	14.00	DB28@0.09 **	DB25@0.13	DB20@0.16	DB20@0.17
	15.00	DB28@0.09 **	DB25@0.13	DB20@0.16	DB20@0.17
20.00 M. SEISMIC LEVEL 2	12.00	DB28@0.12 **	DB25@0.13	DB20@0.16	DB20@0.17
	13.00	DB28@0.09 **	DB25@0.13	DB20@0.16	DB20@0.17
	14.00	DB28@0.09 **	DB25@0.13	DB20@0.16	DB20@0.17
	15.00	DB28@0.09 **	DB25@0.13	DB20@0.16	DB20@0.17

REMARK ; ** = 2 LAYERS

ADJUST LENGTH FOR SKEW BRIDGE

VALUE OF SEC θ IN CASE OF SKEW BRIDGE (SKEW, θ)					
SKEW ANGLE, θ (DEGREE)	0	5	10	15	20
SEC θ	1.0000	1.0038	1.0154	1.0353	1.0642
SKEW ANGLE, θ (DEGREE)	25	30	35	40	45
SEC θ	1.1034	1.1547	1.2208	1.3054	1.4142

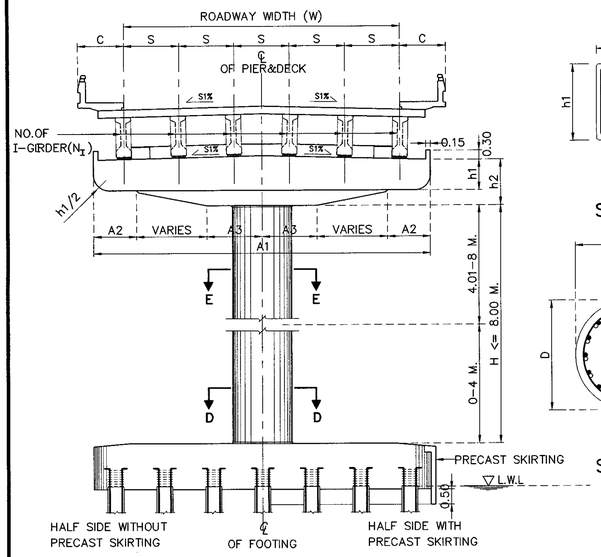

SECTION A-A

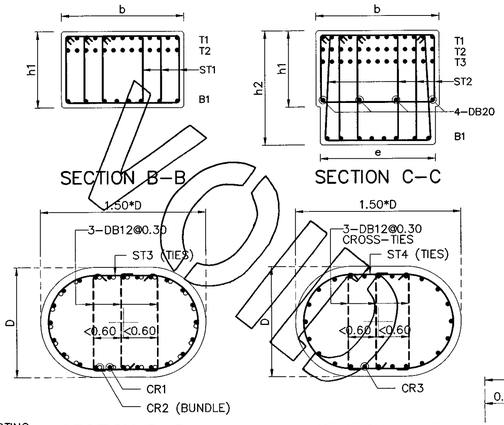

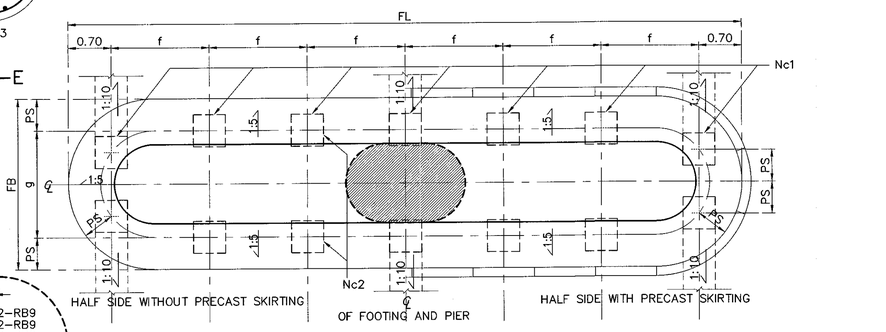

PLAN OF FOOTING

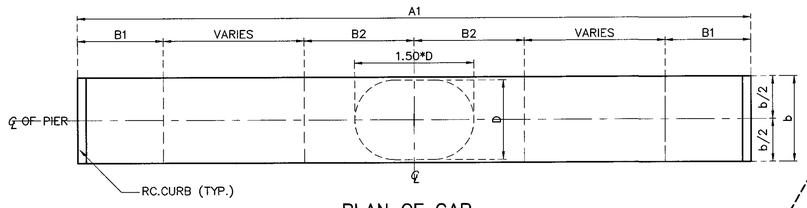

PLAN OF CAP

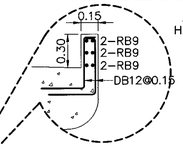

CURB DETAIL

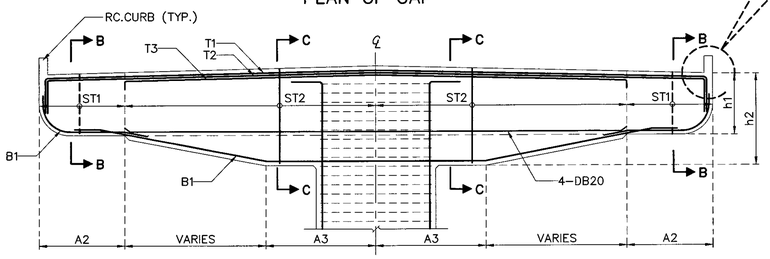

SECTION OF CAP

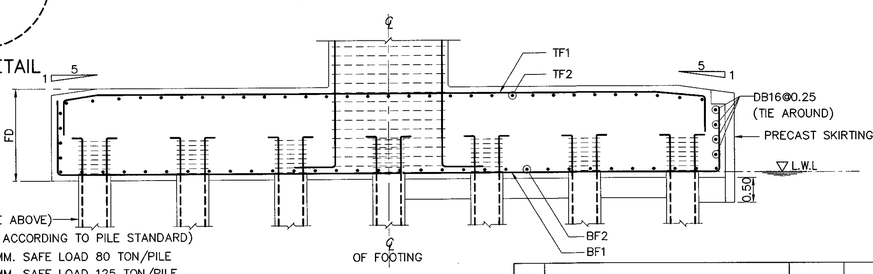

SECTION OF FOOTING

REF.	REVISION	SIGNATURE	DATE

KINGDOM OF THAILAND

MINISTRY OF TRANSPORT

DEPARTMENT OF HIGHWAYS

STANDARD DRAWING

SINGLE COLUMN PIER WITH SIDEWALK (FOR I-GIRDER)
ROADWAY WIDTH 12.00 - 15.00 M., 15.00 M.
AND 20.00 M. SPAN, HEIGHT ≤ 8.00 M.

DESIGNED : D.O.H. & CONSULTANTS	CHECKED : BUREAU OF LOCATION & DESIGN	DATE : OCT 2015
SUBMITTED : (DIRECTOR OF LOCATION & DESIGN BUREAU)		SCALE : AS SHOWN
APPROVED : (FOR DIRECTOR GENERAL)		DWG NO. PC-211
		SHEET NO. 271

D:\std dwg 2015\PC-211(REV00)

D:\20141103_Team Group\ปี 2558\10P2045_STANDARD DRAWING DOH\Standard Drawing DOH_61.02.19\แบบมาตรฐาน(แก้ไข)_Revision 1.2017-JAN2018\ENG\STANDARD FINAL-1-CAD(ENG)\STRUCTURAL WORK\Structural Work-Sec. 1 Bridge Span Not More Than 20.00 M\PC-211(REV01)

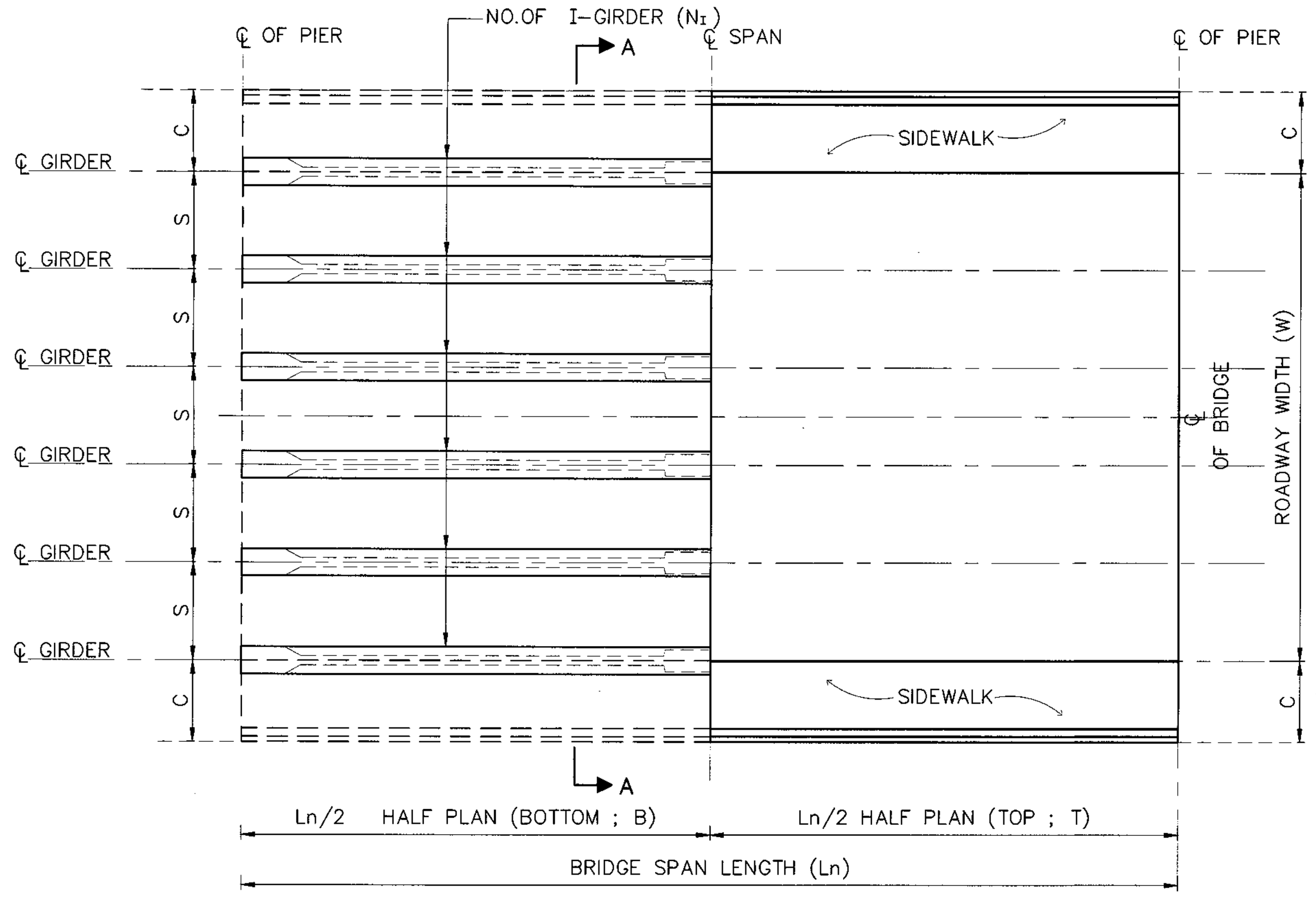

PLAN OF BRIDGE DECK

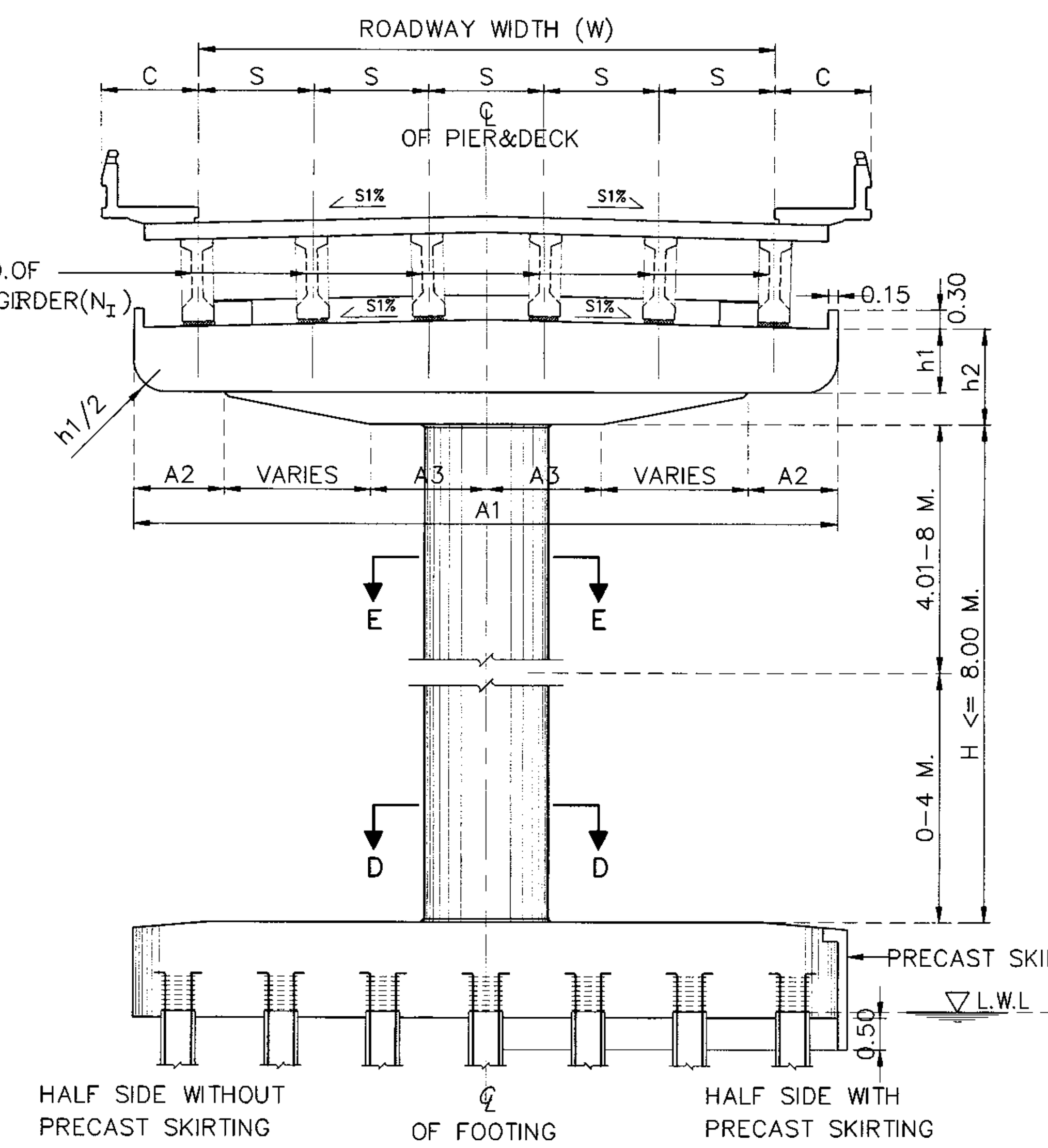

SECTION A-A

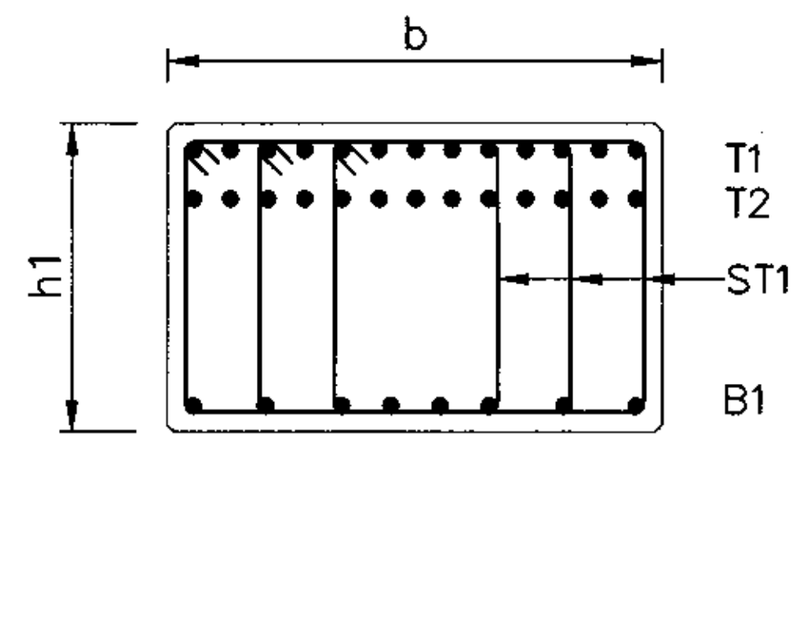

SECTION B-B

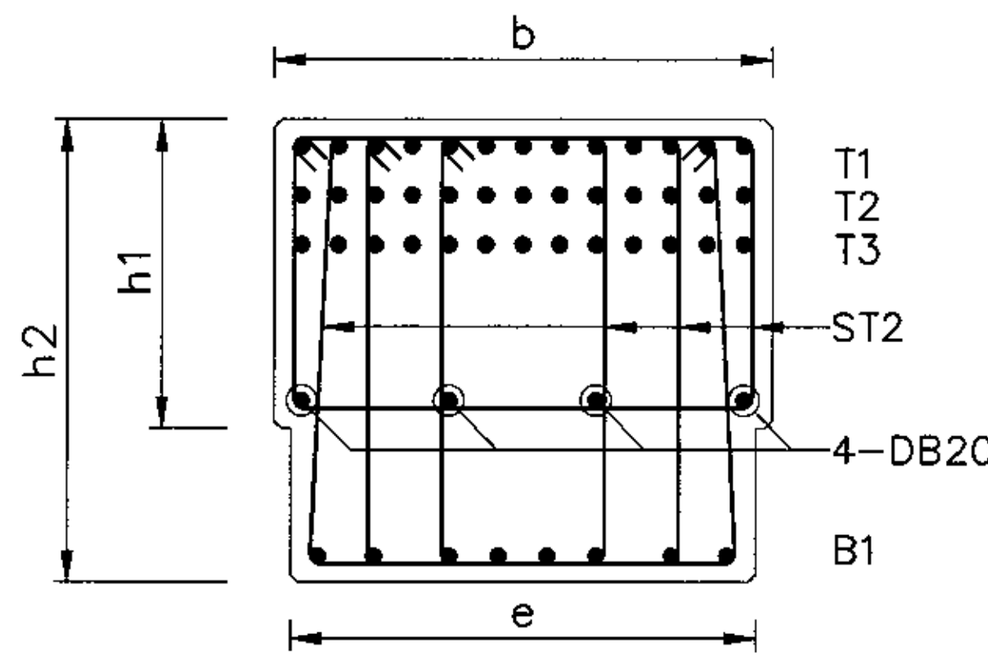

SECTION C-C

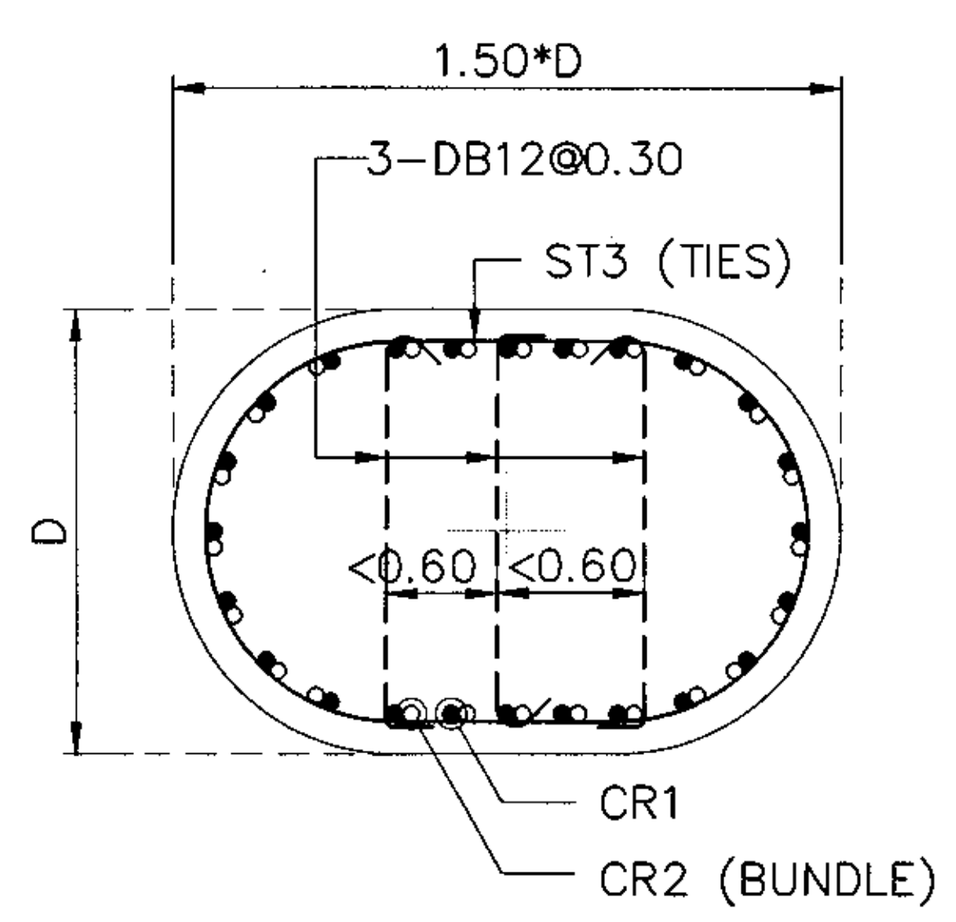

SECTION D-D

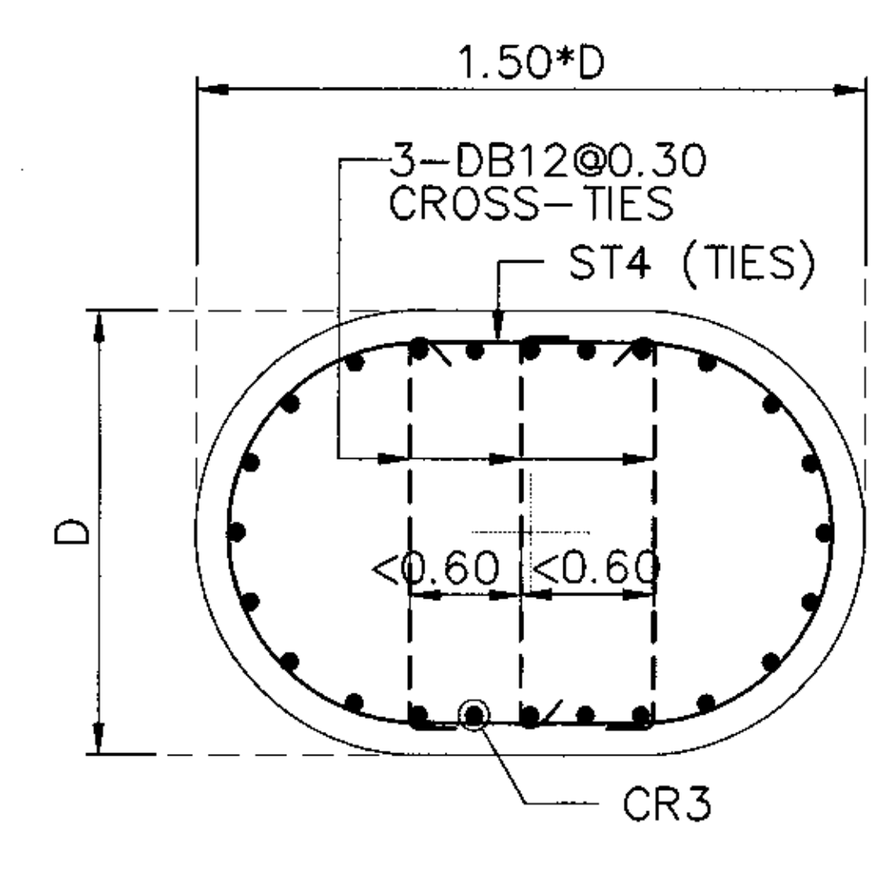

SECTION E-E

NOTES :

1. ALL DIMENSIONS SHOWN ARE IN METERS UNLESS OTHERWISE INDICATED.
2. DESIGN LIVE LOAD : HL-93
3. A MINIMUM ULTIMATE COMPRESSIVE STRENGTH FOR A 150x150x150 MM. CUBE AT 28 DAYS AS FOLLOWS:
   A) FOR ABUTMENT AND WINGWALL 35 MPa. (357 KG/CM^2)
   B) FOR FOOTING 35 MPa. (357 KG/CM^2)
   C) FOR SIDEWALK AND BARRIER 35 MPa. (357 KG/CM^2)
4. REBAR SIZES SMALLER THAN 12 MM. SHALL BE TIS 20 GRADE SR 24 PLAIN ROUND BARS, OTHERS SHALL BE TIS 24 GRADE SD 40 DEFORMED BARS UNLESS OTHERWISE INDICATED.

1.SPAN LENGTH 15.00 M., HEIGHT ≤ 8.00 M.

Ln (M.)	W (M.)	NO.OF I-GIRDER (N_I)	DIMENSION (M.)								C (SIDEWALK WIDTH)		REBAR COLUMN					
			A1	A2	A3	b	e	S	h1	h2	SW=1.00 M.	SW=1.50 M.	Dx1.5D(M.)	CR1	CR2	ST3	CR3	ST4
15.00 M. SEISMIC LEVEL 1	12.00	7	14.00	1.70	2.30	1.80	1.60	2.00	1.00	1.70	1.00	1.50	1.40x2.10	48-DB28	–	DB12@0.15	44-DB28	DB12@0.30
	13.00	8	15.00	1.80	2.50	1.80	1.60	1.86	1.00	1.70	1.00	1.50	1.40x2.10	60-DB28	–	DB12@0.15	50-DB28	DB12@0.30
	14.00	8	16.00	2.00	2.70	1.80	1.60	2.00	1.00	1.70	1.00	1.50	1.40x2.10	60-DB28	–	DB12@0.15	50-DB28	DB12@0.30
	15.00	8	16.00	2.00	2.70	1.80	1.60	2.00	1.00	1.70	1.00	–	1.40x2.10	60-DB28	–	DB12@0.15	50-DB28	DB12@0.30
15.00 M. SEISMIC LEVEL 2	12.00	7	14.00	1.70	2.30	1.80	1.60	2.00	1.00	1.70	1.00	1.50	1.40x2.10	48-DB28	–	DB12@0.15	44-DB28	DB12@0.30
	13.00	8	15.00	1.80	2.50	1.80	1.60	1.86	1.00	1.70	1.00	1.50	1.40x2.10	60-DB28	–	DB12@0.15	50-DB28	DB12@0.30
	14.00	8	16.00	2.00	2.70	1.80	1.60	2.00	1.00	1.70	1.00	1.50	1.40x2.10	60-DB28	–	DB12@0.15	50-DB28	DB12@0.30
	15.00	8	16.00	2.00	2.70	1.80	1.60	2.00	1.00	1.70	1.00	–	1.40x2.10	60-DB28	–	DB12@0.15	50-DB28	DB12@0.30

Ln (M.)	W (M.)	REBAR CAP BEAM						PILE SIZING, PS (MM.)	Nc1	Nc2	NO.OF PILE	FOOTING SKEW 0°-15°					FOOTING SKEW 16°-45°					BOTTOM REBAR		TOP REBAR	
		T1	T2	T3	B1	ST1(STIRRUPS)	ST2(STIRRUPS)					FL	FB	FD	f	g	FL	FB	FD	f	g	BF1	BF2	TF1	TF2
15.00 M. SEISMIC LEVEL 1	12.00	15-DB28	15-DB28	15-DB28	10-DB20	3-DB12@0.25	4-DB12@0.175	Ø 525x525	8	2	16	13.00	2.80	2.00	1.66	1.75	13.00	3.30	2.00	1.66	2.25	DB28@0.10 **	DB25@0.14	DB20@0.18	DB20@0.18
	13.00	18-DB28	18-DB28	18-DB28	12-DB20	3-DB12@0.25	4-DB12@0.150	Ø 525x525	9	2	18	15.00	2.80	2.20	1.70	1.75	15.00	3.30	2.20	1.70	2.25	DB28@0.09 **	DB25@0.13	DB20@0.16	DB20@0.16
	14.00	18-DB28	18-DB28	18-DB28	12-DB20	3-DB12@0.25	4-DB12@0.125	Ø 525x525	9	2	18	15.00	2.80	2.20	1.70	1.75	15.00	3.30	2.20	1.70	2.25	DB28@0.08 **	DB25@0.13	DB20@0.16	DB20@0.16
	15.00	18-DB28	18-DB28	18-DB28	12-DB20	3-DB12@0.25	4-DB12@0.125	Ø 525x525	9	2	18	15.00	2.80	2.20	1.70	1.75	15.00	3.30	2.20	1.70	2.25	DB28@0.08 **	DB25@0.13	DB20@0.16	DB20@0.16
15.00 M. SEISMIC LEVEL 2	12.00	15-DB28	15-DB28	15-DB28	10-DB20	3-DB12@0.25	4-DB12@0.175	Ø 525x525	8	2	16	13.00	2.80	2.00	1.66	1.75	13.00	3.30	2.00	1.66	2.25	DB28@0.10 **	DB25@0.14	DB20@0.18	DB20@0.18
	13.00	18-DB28	18-DB28	18-DB28	12-DB20	3-DB12@0.25	4-DB12@0.150	Ø 525x525	9	2	18	15.00	2.80	2.20	1.70	1.75	15.00	3.30	2.20	1.70	2.25	DB28@0.09 **	DB25@0.13	DB20@0.16	DB20@0.16
	14.00	18-DB28	18-DB28	18-DB28	12-DB20	3-DB12@0.25	4-DB12@0.125	Ø 525x525	9	2	18	15.00	2.80	2.20	1.70	1.75	15.00	3.30	2.20	1.70	2.25	DB28@0.08 **	DB25@0.13	DB20@0.16	DB20@0.16
	15.00	18-DB28	18-DB28	18-DB28	12-DB20	3-DB12@0.25	4-DB12@0.125	Ø 525x525	9	2	18	15.00	2.80	2.20	1.70	1.75	15.00	3.30	2.20	1.70	2.25	DB28@0.08 **	DB25@0.13	DB20@0.16	DB20@0.16

REMARK ; ** = 2 LAYERS

2.SPAN LENGTH 20.00 M., HEIGHT ≤ 8.00 M.

Ln (M.)	W (M.)	NO.OF I-GIRDER (N_I)	DIMENSION (M.)								C (SIDEWALK WIDTH)		REBAR COLUMN					
			A1	A2	A3	b	e	S	h1	h2	SW=1.00 M.	SW=1.50 M.	Dx1.5D(M.)	CR1	CR2	ST3	CR3	ST4
20.00 M. SEISMIC LEVEL 1	12.00	7	14.00	1.70	2.30	1.80	1.60	2.00	1.00	1.70	1.00	1.50	1.40x2.10	48-DB28	–	DB12@0.15	44-DB28	DB12@0.30
	13.00	8	15.00	1.80	2.50	1.80	1.60	1.86	1.00	1.70	1.00	1.50	1.40x2.10	60-DB28	–	DB12@0.15	50-DB28	DB12@0.30
	14.00	8	16.00	2.00	2.70	1.80	1.60	2.00	1.00	1.70	1.00	1.50	1.40x2.10	68-DB28	–	DB12@0.15	56-DB28	DB12@0.30
	15.00	8	16.00	2.00	2.70	1.80	1.60	2.00	1.00	1.70	1.00	–	1.40x2.10	68-DB28	–	DB12@0.15	56-DB28	DB12@0.30
20.00 M. SEISMIC LEVEL 2	12.00	7	14.00	1.70	2.30	1.80	1.60	2.00	1.00	1.70	1.00	1.50	1.40x2.10	48-DB28	–	DB12@0.15	44-DB28	DB12@0.30
	13.00	8	15.00	1.80	2.50	1.80	1.60	1.86	1.00	1.70	1.00	1.50	1.40x2.10	60-DB28	–	DB12@0.15	50-DB28	DB12@0.30
	14.00	8	16.00	2.00	2.70	1.80	1.60	2.00	1.00	1.70	1.00	1.50	1.40x2.10	68-DB28	–	DB12@0.15	56-DB28	DB12@0.30
	15.00	8	16.00	2.00	2.70	1.80	1.60	2.00	1.00	1.70	1.00	–	1.40x2.10	68-DB28	–	DB12@0.15	56-DB28	DB12@0.30

Ln (M.)	W (M.)	REBAR CAP BEAM						PILE SIZING, PS (MM.)	Nc1	Nc2	NO.OF PILE	FOOTING SKEW 0°-15°					FOOTING SKEW 16°-45°				
		T1	T2	T3	B1	ST1(STIRRUPS)	ST2(STIRRUPS)					FL	FB	FD	f	g	FL	FB	FD	f	g
20.00 M. SEISMIC LEVEL 1	12.00	18-DB28	18-DB28	18-DB28	12-DB20	3-DB12@0.25	5-DB12@0.125	Ø 650x650	6	2	12	12.00	3.25	2.00	2.12	1.95	12.00	3.75	2.00	2.12	2.45
	13.00	19-DB28	19-DB28	19-DB28	12-DB20	3-DB12@0.25	5-DB12@0.125	Ø 650x650	7	2	14	14.00	3.25	2.20	2.10	1.95	14.00	3.75	2.20	2.10	2.45
	14.00	21-DB28	21-DB28	21-DB28	12-DB20	3-DB12@0.25	5-DB12@0.125	Ø 650x650	7	2	14	14.00	3.25	2.20	2.10	1.95	14.00	3.75	2.20	2.10	2.45
	15.00	21-DB28	21-DB28	21-DB28	12-DB20	3-DB12@0.25	5-DB12@0.125	Ø 650x650	7	2	14	14.00	3.25	2.20	2.00	1.95	14.00	3.75	2.20	2.00	2.45
20.00 M. SEISMIC LEVEL 2	12.00	18-DB28	18-DB28	18-DB28	12-DB20	3-DB12@0.25	5-DB12@0.125	Ø 650x650	6	2	12	12.00	3.25	2.00	2.12	1.95	12.00	3.75	2.00	2.12	2.45
	13.00	19-DB28	19-DB28	19-DB28	12-DB20	3-DB12@0.25	5-DB12@0.125	Ø 650x650	7	2	14	14.00	3.25	2.20	2.10	1.95	14.00	3.75	2.20	2.10	2.45
	14.00	21-DB28	21-DB28	21-DB28	12-DB20	3-DB12@0.25	5-DB12@0.125	Ø 650x650	7	2	14	14.00	3.25	2.20	2.10	1.95	14.00	3.75	2.20	2.10	2.45
	15.00	21-DB28	21-DB28	21-DB28	12-DB20	3-DB12@0.25	5-DB12@0.125	Ø 650x650	7	2	14	14.00	3.25	2.20	2.00	1.95	14.00	3.75	2.20	2.00	2.45

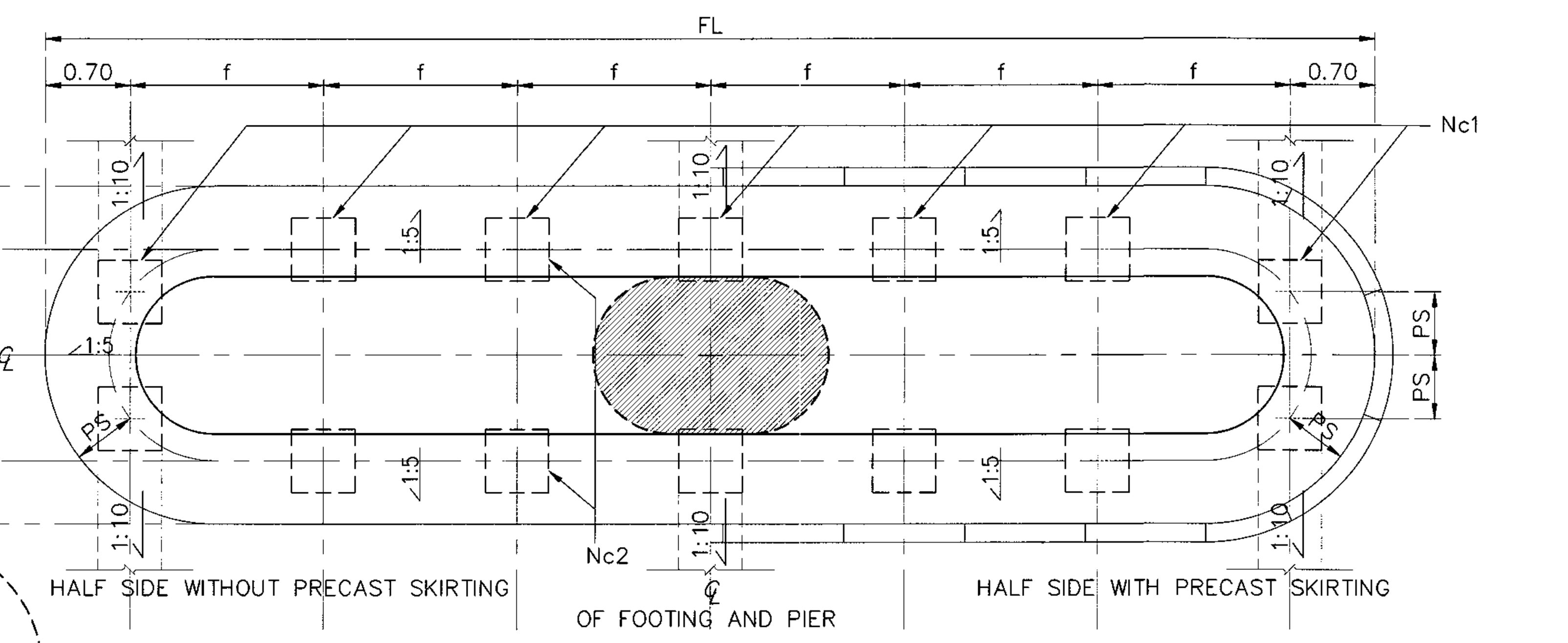

PLAN OF FOOTING

Ln (M.)	W (M.)	BOTTOM REBAR		TOP REBAR	
		BF1	BF2	TF1	TF2
20.00 M. SEISMIC LEVEL 1	12.00	DB28@0.12 **	DB25@0.13	DB20@0.16	DB20@0.17
	13.00	DB28@0.09 **	DB25@0.13	DB20@0.16	DB20@0.17
	14.00	DB28@0.09 **	DB25@0.13	DB20@0.16	DB20@0.17
	15.00	DB28@0.09 **	DB25@0.13	DB20@0.16	DB20@0.17
20.00 M. SEISMIC LEVEL 2	12.00	DB28@0.12 **	DB25@0.13	DB20@0.16	DB20@0.17
	13.00	DB28@0.09 **	DB25@0.13	DB20@0.16	DB20@0.17
	14.00	DB28@0.09 **	DB25@0.13	DB20@0.16	DB20@0.17
	15.00	DB28@0.09 **	DB25@0.13	DB20@0.16	DB20@0.17

REMARK ; ** = 2 LAYERS

ADJUST LENGTH FOR SKEW BRIDGE

VALUE OF SEC θ IN CASE OF SKEW BRIDGE (SKEW, θ)					
SKEW ANGLE, θ (DEGREE)	0	5	10	15	20
SEC θ	1.0000	1.0038	1.0154	1.0353	1.0642
SKEW ANGLE, θ (DEGREE)	25	30	35	40	45
SEC θ	1.1034	1.1547	1.2208	1.3054	1.4142

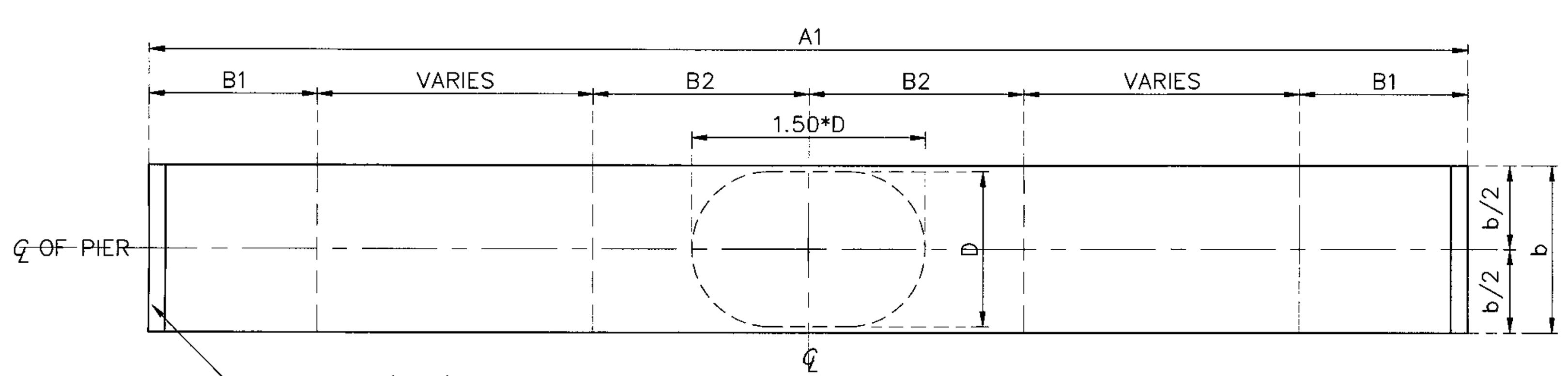

PLAN OF CAP

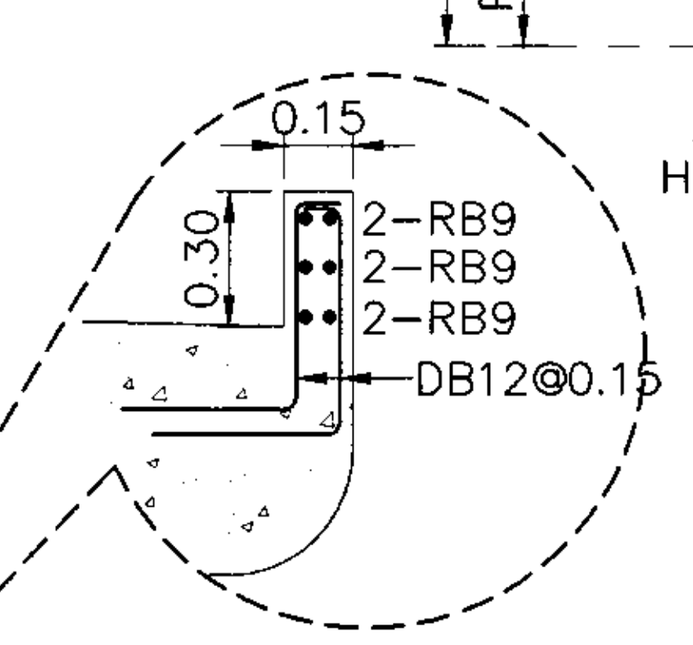

CURB DETAIL

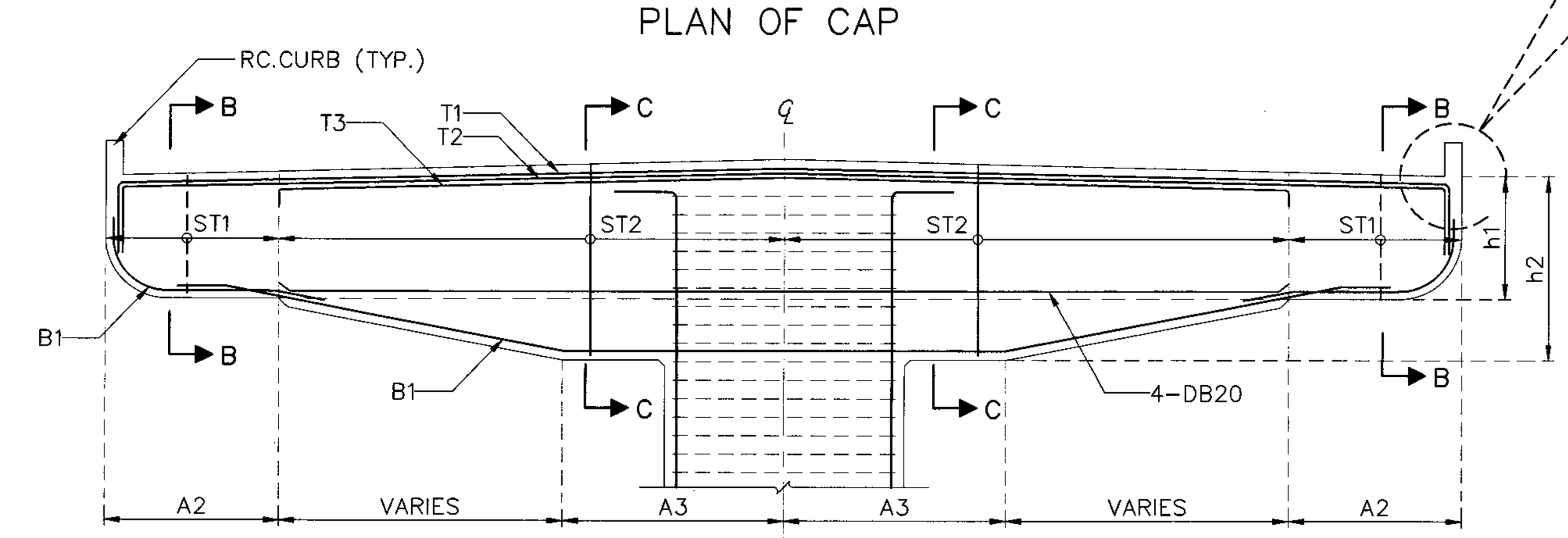

SECTION OF CAP

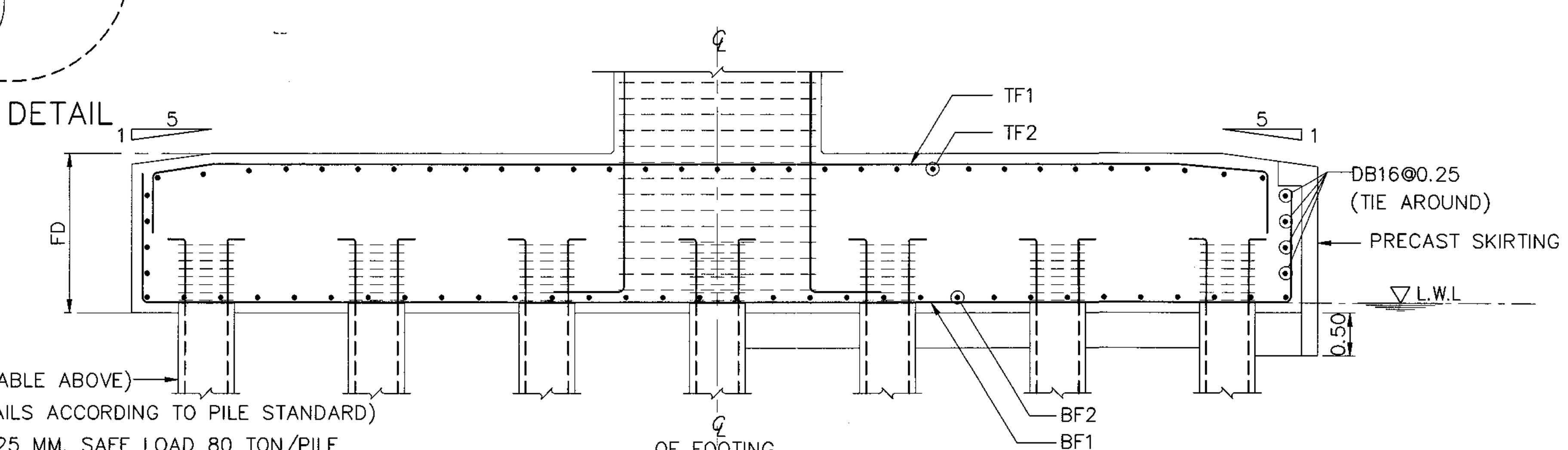

PILE (FROM TABLE ABOVE)
(OTHERS DETAILS ACCORDING TO PILE STANDARD)
PILE Ø 525x525 MM. SAFE LOAD 80 TON/PILE
PILE Ø 650x650 MM. SAFE LOAD 125 TON/PILE

SECTION OF FOOTING

REV.	REVISION	SIGNATURE	DATE
REV.1	REVISION 1/2018	(signature)	JAN 2018

KINGDOM OF THAILAND

MINISTRY OF TRANSPORT

DEPARTMENT OF HIGHWAYS

STANDARD DRAWING

SINGLE COLUMN PIER WITH SIDEWALK (FOR I-GIRDER)
ROADWAY WIDTH 12.00 – 15.00 M., 15.00 M.
AND 20.00 M. SPAN, HEIGHT ≤ 8.00 M.

DESIGNED : D.O.H. & CONSULTANTS **CHECKED :** BUREAU OF LOCATION & DESIGN **DATE :** MAR 2018

SUBMITTED : (DIRECTOR OF LOCATION & DESIGN BUREAU) **SCALE :** AS SHOWN

APPROVED : (FOR DIRECTOR GENERAL) **DWG NO.** PC-211

SHEET NO. 271/R1

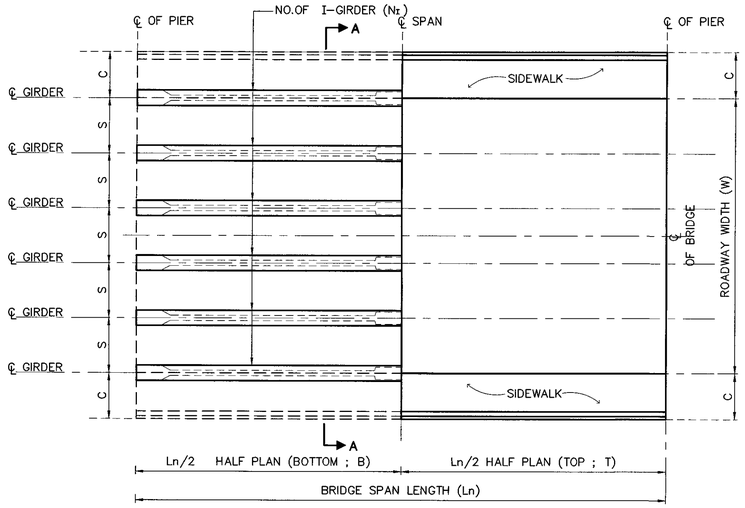

PLAN OF BRIDGE DECK

NOTE :
1. ALL DIMENSIONS SHOWN ARE IN METERS UNLESS OTHERWISE INDICATED
2. LIVE LOADING : VEHICLE LOAD HL-93
3. A MINIMUM ULTIMATE COMPRESSIVE STRENGTH FOR A 150X150X150 MM. CUBE AT 28 DAYS AS FOLLOWS :
   A) FOR COLUMN AND CAP BEAM 35 MPa
   B) FOR FOOTING 35 MPa
4. REBARS SMALLER THAN RB9 MM. SHALL BE TIS 20 GRADE SR 24 PLAIN ROUND BARS, OTHERS SHALL BE TIS 24 GRADE SD50 DEFORMED BARS UNLESS OTHERWISE INDICATED.

1.SPAN LENGTH 15.00 M., 8.00 M. < HEIGHT ≤ 15.00 M.

Ln (M.)	W (M.)	NO.OF I-GIRDER (N_I)	DIMENSION (M.)								C (SIDEWALK WIDTH)		REBAR COLUMN					
			A1	A2	A3	b	e	S	h1	h2	SW=1.00 M.	SW=1.50 M.	Dx1.5D(M.)	CR1	CR2	ST3	CR3	ST4
15.00 M. SEISMIC LEVEL 1	9.00	6	11.00	1.40	1.80	1.60	1.45	1.80	1.00	1.50	1.00	1.50	1.30x1.95	60-DB28	–	DB12@0.15	38-DB28	DB12@0.30
	10.00	6	12.00	1.50	2.00	1.60	1.45	2.00	1.00	1.50	1.00	1.50	1.30x1.95	72-DB28	–	DB12@0.15	40-DB28	DB12@0.30
	11.00	7	13.00	1.60	2.20	1.60	1.45	1.83	1.00	1.50	1.00	1.50	1.30x1.95	76-DB28	–	DB12@0.15	48-DB28	DB12@0.30
	12.00	7	14.00	1.70	2.30	1.80	1.60	2.00	1.00	1.70	1.00	1.50	1.40x2.10	72-DB28	–	DB12@0.15	44-DB28	DB12@0.30
	13.00	8	15.00	1.80	2.50	1.80	1.60	1.86	1.00	1.70	1.00	1.50	1.40x2.10	78-DB28	–	DB12@0.15	52-DB28	DB12@0.30
	14.00	8	16.00	2.00	2.70	1.80	1.60	2.00	1.00	1.70	1.00	1.50	1.40x2.10	60-DB28	24-DB28	DB12@0.15	60-DB28	DB12@0.30
	15.00	8	16.00	2.00	2.70	1.80	1.60	2.00	1.00	1.70	1.00	–	1.40x2.10	60-DB28	24-DB28	DB12@0.15	60-DB28	DB12@0.30
15.00 M. SEISMIC LEVEL 2	9.00	6	11.00	1.40	1.80	1.60	1.45	1.80	1.00	1.50	1.00	1.50	1.30x1.95	60-DB28	–	DB12@0.15	38-DB28	DB12@0.30
	10.00	6	12.00	1.50	2.00	1.60	1.45	2.00	1.00	1.50	1.00	1.50	1.30x1.95	72-DB28	–	DB12@0.15	40-DB28	DB12@0.30
	11.00	7	13.00	1.60	2.20	1.60	1.45	1.83	1.00	1.50	1.00	1.50	1.30x1.95	76-DB28	–	DB12@0.15	48-DB28	DB12@0.30
	12.00	7	14.00	1.70	2.30	1.80	1.60	2.00	1.00	1.70	1.00	1.50	1.40x2.10	72-DB28	–	DB12@0.15	44-DB28	DB12@0.30
	13.00	8	15.00	1.80	2.50	1.80	1.60	1.86	1.00	1.70	1.00	1.50	1.40x2.10	78-DB28	–	DB12@0.15	52-DB28	DB12@0.30
	14.00	8	16.00	2.00	2.70	1.80	1.60	2.00	1.00	1.70	1.00	1.50	1.40x2.10	60-DB28	24-DB28	DB12@0.15	60-DB28	DB12@0.30
	15.00	8	16.00	2.00	2.70	1.80	1.60	2.00	1.00	1.70	1.00	–	1.40x2.10	60-DB28	24-DB28	DB12@0.15	60-DB28	DB12@0.30

Ln (M.)	W (M.)	REBAR CAP BEAM						PILE SIZING, PS (MM.)	Nc1	Nc2	NO.OF PILE	FOOTING SKEW 0°-15°					FOOTING SKEW 16°-45°				
		T1	T2	T3	B1	ST1(STIRRUPS)	ST2(STIRRUPS)					FL	FB	FD	f	g	FL	FB	FD	f	g
15.00 M. SEISMIC LEVEL 1	9.00	15-DB28	15-DB28	–	10-DB20	3-DB12@0.20	4-DB12@0.15	Ø 650x650	5	2	10	11.00	3.25	1.85	2.40	1.95	11.00	3.75	1.85	2.40	2.45
	10.00	18-DB28	18-DB28	–	10-DB20	3-DB12@0.20	4-DB12@0.15	Ø 650x650	6	2	12	12.00	3.25	2.00	2.12	1.95	12.00	3.75	2.00	2.12	2.45
	11.00	15-DB28	15-DB28	15-DB28	10-DB20	3-DB12@0.20	4-DB12@0.15	Ø 650x650	6	2	12	13.00	3.25	2.00	2.32	1.95	13.00	3.75	2.00	2.32	2.45
	12.00	15-DB28	15-DB28	15-DB28	10-DB20	3-DB12@0.20	4-DB12@0.15	Ø 650x650	7	2	14	14.00	3.25	2.20	2.10	1.95	14.00	3.75	2.20	2.10	2.45
	13.00	18-DB28	18-DB28	18-DB28	12-DB20	3-DB12@0.20	4-DB12@0.15	Ø 650x650	7	2	14	15.00	3.25	2.30	2.27	1.95	15.00	3.75	2.30	2.27	2.45
	14.00	20-DB28	20-DB28	20-DB28	12-DB20	3-DB12@0.175	4-DB12@0.125	Ø 650x650	8	2	16	16.00	3.25	2.30	2.09	1.95	16.00	3.75	2.30	2.09	2.45
	15.00	20-DB28	20-DB28	20-DB28	12-DB20	3-DB12@0.175	4-DB12@0.125	Ø 650x650	8	2	16	16.00	3.25	2.30	2.00	1.95	16.00	3.75	2.30	2.00	2.45
15.00 M. SEISMIC LEVEL 2	9.00	15-DB28	15-DB28	–	10-DB20	3-DB12@0.20	4-DB12@0.15	Ø 650x650	5	2	10	11.00	3.25	1.85	2.40	1.95	11.00	3.75	1.85	2.40	2.45
	10.00	18-DB28	18-DB28	–	10-DB20	3-DB12@0.20	4-DB12@0.15	Ø 650x650	6	2	12	12.00	3.25	2.00	2.12	1.95	12.00	3.75	2.00	2.12	2.45
	11.00	15-DB28	15-DB28	15-DB28	10-DB20	3-DB12@0.20	4-DB12@0.15	Ø 650x650	6	2	12	13.00	3.25	2.00	2.32	1.95	13.00	3.75	2.00	2.32	2.45
	12.00	15-DB28	15-DB28	15-DB28	10-DB20	3-DB12@0.20	4-DB12@0.15	Ø 650x650	7	2	14	14.00	3.25	2.20	2.10	1.95	14.00	3.75	2.20	2.10	2.45
	13.00	18-DB28	18-DB28	18-DB28	12-DB20	3-DB12@0.20	4-DB12@0.15	Ø 650x650	7	2	14	15.00	3.25	2.30	2.27	1.95	15.00	3.75	2.30	2.27	2.45
	14.00	20-DB28	20-DB28	20-DB28	12-DB20	3-DB12@0.175	4-DB12@0.125	Ø 650x650	8	2	16	16.00	3.25	2.30	2.09	1.95	16.00	3.75	2.30	2.09	2.45
	15.00	20-DB28	20-DB28	20-DB28	12-DB20	3-DB12@0.175	4-DB12@0.125	Ø 650x650	8	2	16	16.00	3.25	2.30	2.00	1.95	16.00	3.75	2.30	2.00	2.45

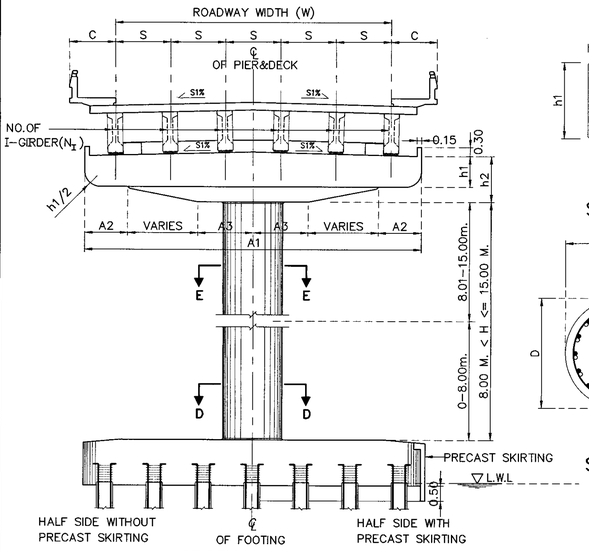

SECTION A-A

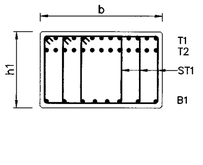

SECTION B-B

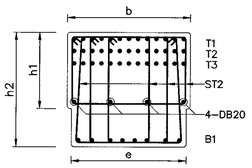

SECTION C-C

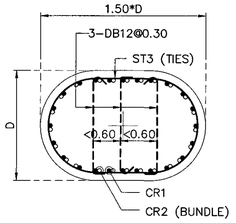

SECTION D-D

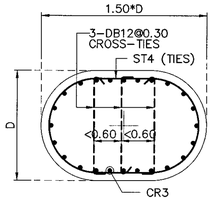

SECTION E-E

Ln (M.)	W (M.)	BOTTOM REBAR		TOP REBAR	
		BF1	BF2	TF1	TF2
15.00 M. SEISMIC LEVEL 1	9.00	DB28@0.11 **	DB25@0.14	DB20@0.18	DB20@0.18
	10.00	DB28@0.10 **	DB25@0.14	DB20@0.18	DB20@0.18
	11.00	DB28@0.09 **	DB25@0.13	DB20@0.16	DB20@0.16
	12.00	DB28@0.09 **	DB25@0.13	DB20@0.16	DB20@0.16
	13.00	DB32@0.10 **	DB25@0.13	DB20@0.16	DB20@0.16
	14.00	DB32@0.08 **	DB25@0.12	DB20@0.14	DB20@0.14
	15.00	DB32@0.08 **	DB25@0.12	DB20@0.14	DB20@0.14
15.00 M. SEISMIC LEVEL 2	9.00	DB28@0.11 **	DB25@0.14	DB20@0.18	DB20@0.18
	10.00	DB28@0.10 **	DB25@0.14	DB20@0.18	DB20@0.18
	11.00	DB28@0.09 **	DB25@0.13	DB20@0.16	DB20@0.16
	12.00	DB28@0.09 **	DB25@0.13	DB20@0.16	DB20@0.16
	13.00	DB32@0.10 **	DB25@0.13	DB20@0.16	DB20@0.16
	14.00	DB32@0.08 **	DB25@0.12	DB20@0.14	DB20@0.14
	15.00	DB32@0.08 **	DB25@0.12	DB20@0.14	DB20@0.14

REMARK ; ** = 2 LAYERS

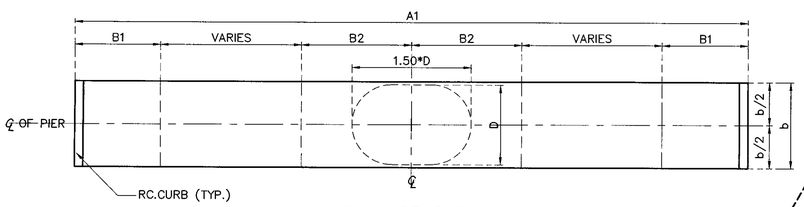

PLAN OF CAP

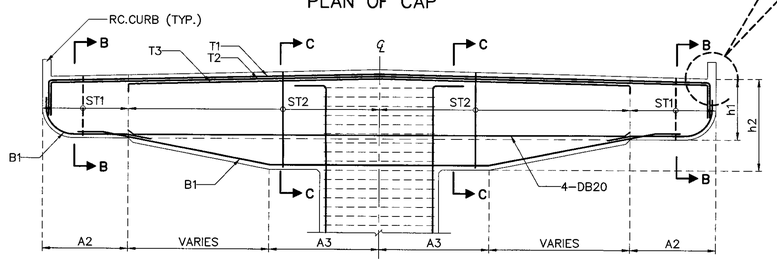

SECTION OF CAP

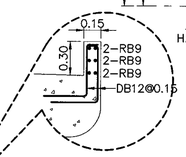

CURB DETAIL

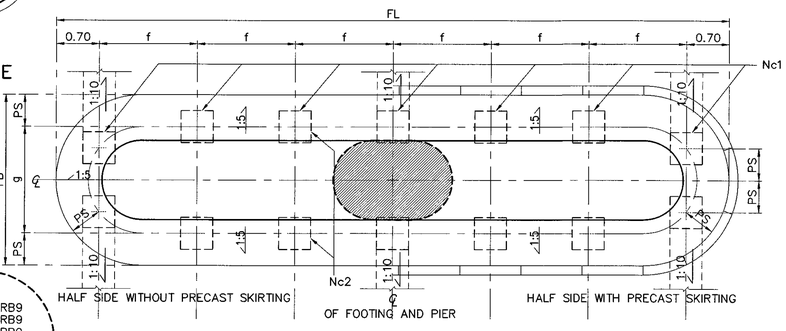

PLAN OF FOOTING

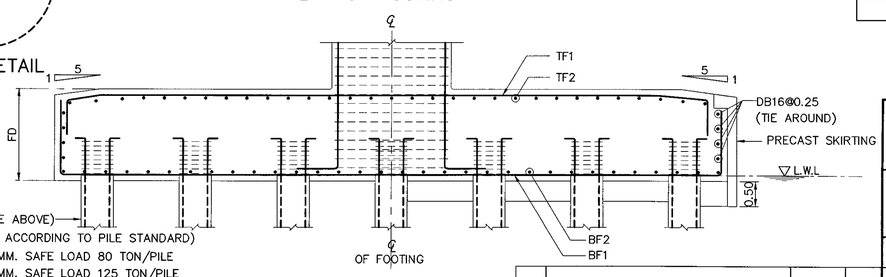

SECTION OF FOOTING

PILE (FROM TABLE ABOVE)
(OTHERS DETAILS ACCORDING TO PILE STANDARD)
PILE Ø 525x525 MM. SAFE LOAD 80 TON/PILE
PILE Ø 650x650 MM. SAFE LOAD 125 TON/PILE

ADJUST LENGTH FOR SKEW BRIDGE

VALUE OF SEC θ IN CASE OF SKEW BRIDGE (SKEW, θ)					
SKEW ANGLE, θ (DEGREE)	0	5	10	15	20
SEC θ	1.0000	1.0038	1.0154	1.0353	1.0642
SKEW ANGLE, θ (DEGREE)	25	30	35	40	45
SEC θ	1.1034	1.1547	1.2208	1.3054	1.4142

REF.	REVISION	SIGNATURE	DATE

KINGDOM OF THAILAND

MINISTRY OF TRANSPORT
DEPARTMENT OF HIGHWAYS

STANDARD DRAWING

SINGLE COLUMN PIER WITH SIDEWALK (FOR I-GIRDER)
ROADWAY WIDTH 9.00 – 15.00 M., 15.00 M. SPAN,
8.00 M. < HEIGHT ≤ 15.00 M.

DESIGNED : D.O.H. & CONSULTANTS	CHECKED : BUREAU OF LOCATION & DESIGN	DATE : OCT 2015
SUBMITTED : (DIRECTOR OF LOCATION & DESIGN BUREAU)		SCALE : AS SHOWN
APPROVED : (FOR DIRECTOR GENERAL)		DWG NO. PC-212
		SHEET NO. 272

D:\std dwg 2015\PC-212(REV00)

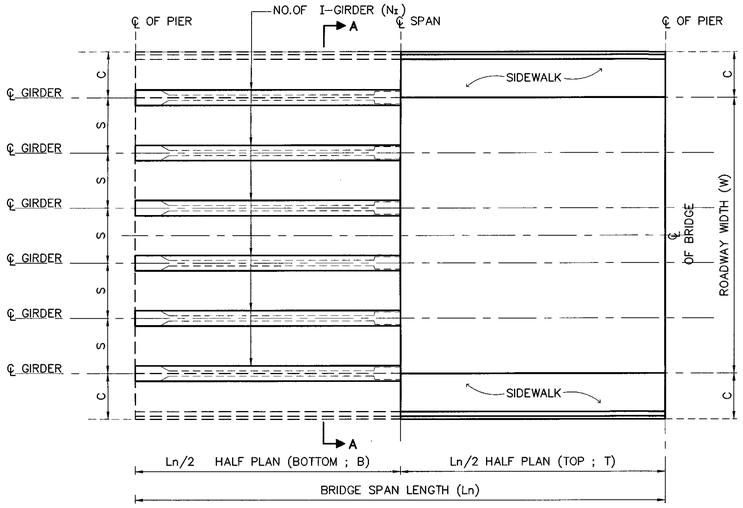

PLAN OF BRIDGE DECK

NOTE :
1. ALL DIMENSIONS SHOWN ARE IN METERS UNLESS OTHERWISE INDICATED
2. LIVE LOADING : VEHICLE LOAD HL-93
3. A MINIMUM ULTIMATE COMPRESSIVE STRENGTH FOR A 150X150X150 MM. CUBE AT 28 DAYS AS FOLLOWS :
   A) FOR COLUMN AND CAP BEAM 35 MPa
   B) FOR FOOTING 35 MPa
4. REBARS SMALLER THAN RB9 MM. SHALL BE TIS 20 GRADE SR 24 PLAIN ROUND BARS, OTHERS SHALL BE TIS 24 GRADE SD50 DEFORMED BARS UNLESS OTHERWISE INDICATED.

1.SPAN LENGTH 20.00 M., 8.00 M. < HEIGHT ≤ 15.00 M.

Ln (M.)	W (M.)	NO.OF I-GIRDER (N_I)	DIMENSION (M.)								C (SIDEWALK WIDTH)		REBAR COLUMN					
			A1	A2	A3	b	e	S	h1	h2	SW=1.00 M.	SW=1.50 M.	Dx1.5D(M.)	CR1	CR2	ST3	CR3	ST4
20.00 M. SEISMIC LEVEL 1	9.00	6	11.00	1.40	1.80	1.60	1.45	1.80	1.00	1.50	1.00	1.50	1.30x1.95	60-DB28	–	DB12@0.15	40-DB28	DB12@0.30
	10.00	6	12.00	1.50	2.00	1.60	1.45	2.00	1.00	1.50	1.00	1.50	1.30x1.95	74-DB28	–	DB12@0.15	46-DB28	DB12@0.30
	11.00	7	13.00	1.60	2.20	1.60	1.45	1.83	1.00	1.50	1.00	1.50	1.40x2.10	68-DB28	–	DB12@0.15	46-DB28	DB12@0.30
	12.00	7	14.00	1.70	2.30	1.80	1.65	2.00	1.00	1.70	1.00	1.50	1.50x2.25	56-DB28	–	DB12@0.15	50-DB28	DB12@0.30
	13.00	8	15.00	1.80	2.50	1.80	1.65	1.86	1.00	1.70	1.00	1.50	1.50x2.25	62-DB28	–	DB12@0.15	52-DB28	DB12@0.30
	14.00	8	16.00	2.00	2.70	1.80	1.65	2.00	1.00	1.70	1.00	1.50	1.50x2.25	72-DB28	–	DB12@0.15	52-DB28	DB12@0.30
	15.00	8	16.00	2.00	2.70	1.80	1.65	2.00	1.00	1.70	1.00	–	1.50x2.25	72-DB28	–	DB12@0.15	52-DB28	DB12@0.30
20.00 M. SEISMIC LEVEL 2	9.00	6	11.00	1.40	1.80	1.60	1.45	1.80	1.00	1.50	1.00	1.50	1.30x1.95	42-DB28	42-DB28	DB12@0.15	42-DB28	DB12@0.30
	10.00	6	12.00	1.50	2.00	1.60	1.45	2.00	1.00	1.50	1.00	1.50	1.30x1.95	46-DB28	46-DB28	DB12@0.15	46-DB28	DB12@0.30
	11.00	7	13.00	1.60	2.20	1.60	1.45	1.83	1.00	1.50	1.00	1.50	1.40x2.10	46-DB28	46-DB28	DB12@0.15	46-DB28	DB12@0.30
	12.00	7	14.00	1.70	2.30	1.80	1.65	2.00	1.00	1.70	1.00	1.50	1.50x2.25	76-DB28	–	DB12@0.15	50-DB28	DB12@0.30
	13.00	8	15.00	1.80	2.50	1.80	1.65	1.86	1.00	1.70	1.00	1.50	1.50x2.25	52-DB28	40-DB28	DB12@0.15	52-DB28	DB12@0.30
	14.00	8	16.00	2.00	2.70	1.80	1.65	2.00	1.00	1.70	1.00	1.50	1.50x2.25	52-DB28	42-DB28	DB12@0.15	52-DB28	DB12@0.30
	15.00	8	16.00	2.00	2.70	1.80	1.65	2.00	1.00	1.70	1.00	–	1.50x2.25	52-DB28	42-DB28	DB12@0.15	52-DB28	DB12@0.30

Ln (M.)	W (M.)	REBAR CAP BEAM						PILE SIZING, PS (MM.)	Nc1	Nc2	NO.OF PILE	FOOTING SKEW 0°-15°					FOOTING SKEW 16°-45°				
		T1	T2	T3	B1	ST1(STIRRUPS)	ST2(STIRRUPS)					FL	FB	FD	f	g	FL	FB	FD	f	g
20.00 M. SEISMIC LEVEL 1	9.00	18-DB28	18-DB28	–	10-DB20	3-DB12@0.20	4-DB12@0.15	Ø 650x650	6	2	12	12.00	3.25	1.85	2.12	1.95	12.00	3.75	1.85	2.12	2.45
	10.00	15-DB28	15-DB28	15-DB28	12-DB20	3-DB12@0.175	4-DB12@0.125	Ø 650x650	6	2	12	12.00	3.25	2.00	2.12	1.95	12.00	3.75	2.00	2.12	2.45
	11.00	19-DB28	19-DB28	19-DB28	12-DB20	3-DB12@0.15	4-DB12@0.125	Ø 650x650	7	2	14	14.00	3.25	2.00	2.10	1.95	14.00	3.75	2.00	2.10	2.45
	12.00	18-DB28	18-DB28	18-DB28	12-DB20	3-DB12@0.175	4-DB12@0.15	Ø 650x650	7	2	14	14.00	3.25	2.00	2.10	1.95	14.00	3.75	2.00	2.10	2.45
	13.00	21-DB28	21-DB28	21-DB28	12-DB20	3-DB12@0.175	4-DB12@0.15	Ø 650x650	8	2	16	16.00	3.25	2.30	2.09	1.95	16.00	3.75	2.30	2.09	2.45
	14.00	24-DB28	24-DB28	24-DB28	12-DB20	3-DB12@0.15	4-DB12@0.15	Ø 650x650	8	2	16	16.00	3.25	2.30	2.09	1.95	16.00	3.75	2.30	2.09	2.45
	15.00	24-DB28	24-DB28	24-DB28	12-DB20	3-DB12@0.15	4-DB12@0.15	Ø 650x650	8	2	16	16.00	3.25	2.30	2.00	1.95	16.00	3.75	2.30	2.00	2.45
20.00 M. SEISMIC LEVEL 2	9.00	18-DB28	18-DB28	–	10-DB20	3-DB12@0.20	4-DB12@0.15	Ø 650x650	6	2	12	12.00	3.25	1.85	2.12	1.95	12.00	3.75	1.85	2.12	2.45
	10.00	15-DB28	15-DB28	15-DB28	12-DB20	3-DB12@0.175	4-DB12@0.125	Ø 650x650	6	2	12	12.00	3.25	2.00	2.12	1.95	12.00	3.75	2.00	2.12	2.45
	11.00	19-DB28	19-DB28	19-DB28	12-DB20	3-DB12@0.15	4-DB12@0.125	Ø 650x650	7	2	14	14.00	3.25	2.00	2.10	1.95	14.00	3.75	2.00	2.10	2.45
	12.00	18-DB28	18-DB28	18-DB28	12-DB20	3-DB12@0.175	4-DB12@0.15	Ø 650x650	7	2	14	14.00	3.25	2.00	2.10	1.95	14.00	3.75	2.00	2.10	2.45
	13.00	21-DB28	21-DB28	21-DB28	12-DB20	3-DB12@0.175	4-DB12@0.15	Ø 650x650	8	2	16	16.00	3.25	2.30	2.09	1.95	16.00	3.75	2.30	2.09	2.45
	14.00	24-DB28	24-DB28	24-DB28	12-DB20	3-DB12@0.15	4-DB12@0.15	Ø 650x650	8	2	16	16.00	3.25	2.30	2.09	1.95	16.00	3.75	2.30	2.09	2.45
	15.00	24-DB28	24-DB28	24-DB28	12-DB20	3-DB12@0.15	4-DB12@0.15	Ø 650x650	8	2	16	16.00	3.25	2.30	2.00	1.95	16.00	3.75	2.30	2.00	2.45

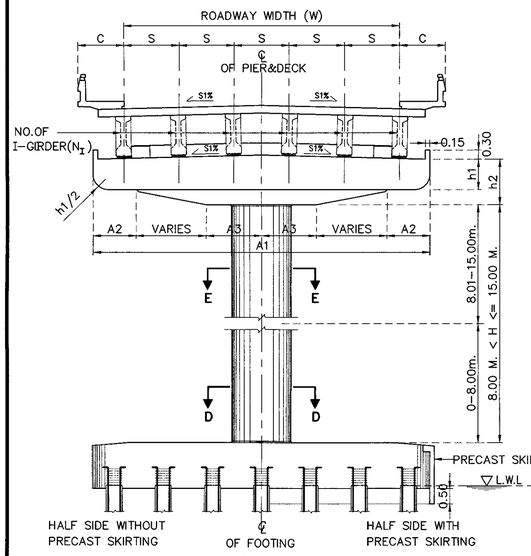

SECTION A-A

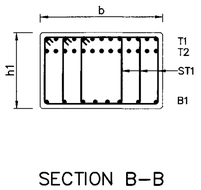

SECTION B-B

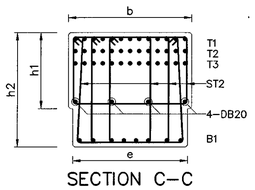

SECTION C-C

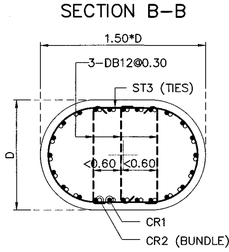

SECTION D-D

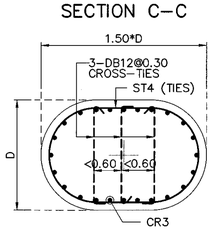

SECTION E-E

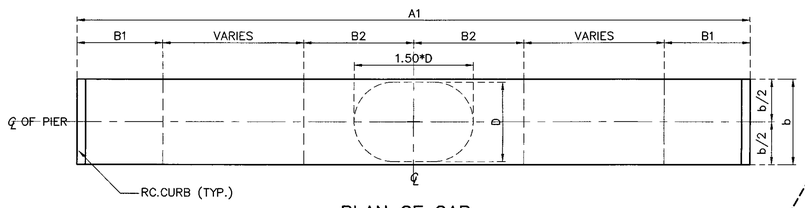

PLAN OF CAP

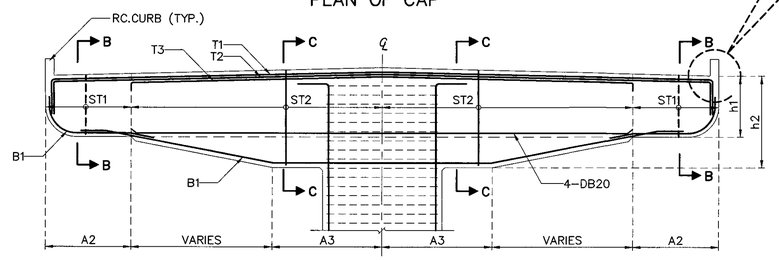

SECTION OF CAP

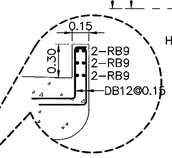

CURB DETAIL

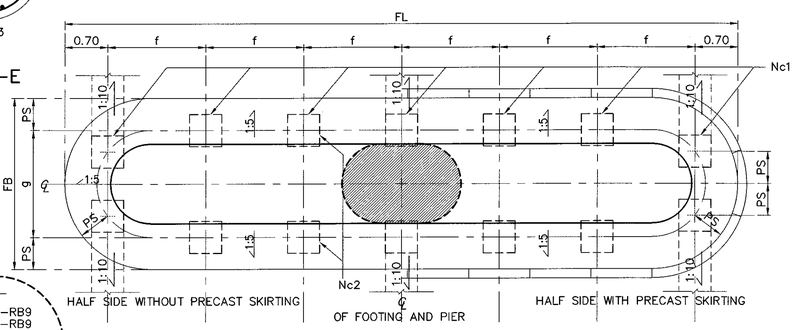

PLAN OF FOOTING

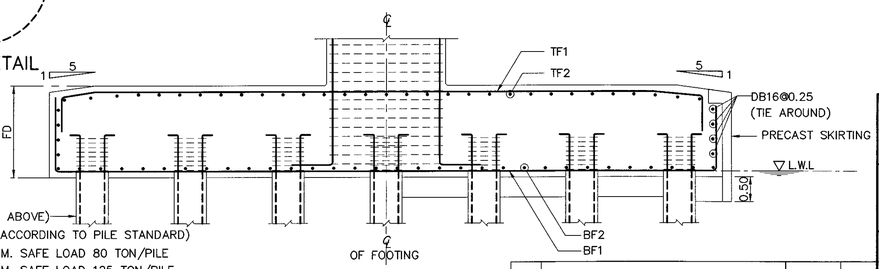

SECTION OF FOOTING

PILE (FROM TABLE ABOVE)
(OTHERS DETAILS ACCORDING TO PILE STANDARD)
PILE Ø 525x525 MM. SAFE LOAD 80 TON/PILE
PILE Ø 650x650 MM. SAFE LOAD 125 TON/PILE

Ln (M.)	W (M.)	BOTTOM REBAR		TOP REBAR	
		BF1	BF2	TF1	TF2
20.00 M. SEISMIC LEVEL 1	9.00	DB28@0.09 **	DB25@0.14	DB20@0.18	DB20@0.18
	10.00	DB32@0.12 **	DB25@0.14	DB20@0.18	DB20@0.18
	11.00	DB32@0.09 **	DB25@0.13	DB20@0.16	DB20@0.16
	12.00	DB32@0.09 **	DB25@0.13	DB20@0.16	DB20@0.16
	13.00	DB32@0.08 **	DB25@0.12	DB20@0.14	DB20@0.14
	14.00	DB32@0.08 **	DB25@0.12	DB20@0.14	DB20@0.14
	15.00	DB32@0.09 **	DB25@0.12	DB20@0.14	DB20@0.14
20.00 M. SEISMIC LEVEL 2	9.00	DB28@0.09 **	DB25@0.14	DB20@0.18	DB20@0.18
	10.00	DB32@0.12 **	DB25@0.14	DB20@0.18	DB20@0.18
	11.00	DB32@0.09 **	DB25@0.13	DB20@0.16	DB20@0.16
	12.00	DB32@0.09 **	DB25@0.13	DB20@0.16	DB20@0.16
	13.00	DB32@0.08 **	DB25@0.12	DB20@0.14	DB20@0.14
	14.00	DB32@0.08 **	DB25@0.12	DB20@0.14	DB20@0.14
	15.00	DB32@0.08 **	DB25@0.12	DB20@0.14	DB20@0.14

REMARK ; ** = 2 LAYERS

ADJUST LENGTH FOR SKEW BRIDGE

VALUE OF SEC θ IN CASE OF SKEW BRIDGE (SKEW, θ)					
SKEW ANGLE, θ (DEGREE)	0	5	10	15	20
SEC θ	1.0000	1.0038	1.0154	1.0353	1.0642
SKEW ANGLE, θ (DEGREE)	25	30	35	40	45
SEC θ	1.1034	1.1547	1.2208	1.3054	1.4142

REF.	REVISION	SIGNATURE	DATE

KINGDOM OF THAILAND

MINISTRY OF TRANSPORT
DEPARTMENT OF HIGHWAYS

STANDARD DRAWING

SINGLE COLUMN PIER WITH SIDEWALK (FOR I-GIRDER)
ROADWAY WIDTH 9.00 – 15.00 M., 20.00 M. SPAN,
8.00 M. < HEIGHT ≤ 15.00 M.

DESIGNED : D.O.H. & CONSULTANTS	CHECKED : BUREAU OF LOCATION & DESIGN	DATE : OCT 2015
SUBMITTED : (DIRECTOR OF LOCATION & DESIGN BUREAU)		SCALE : AS SHOWN
APPROVED : (FOR DIRECTOR GENERAL)		DWG NO. PC-213
		SHEET NO. 273

D:\std dwg 2015\PC-213(REV00)

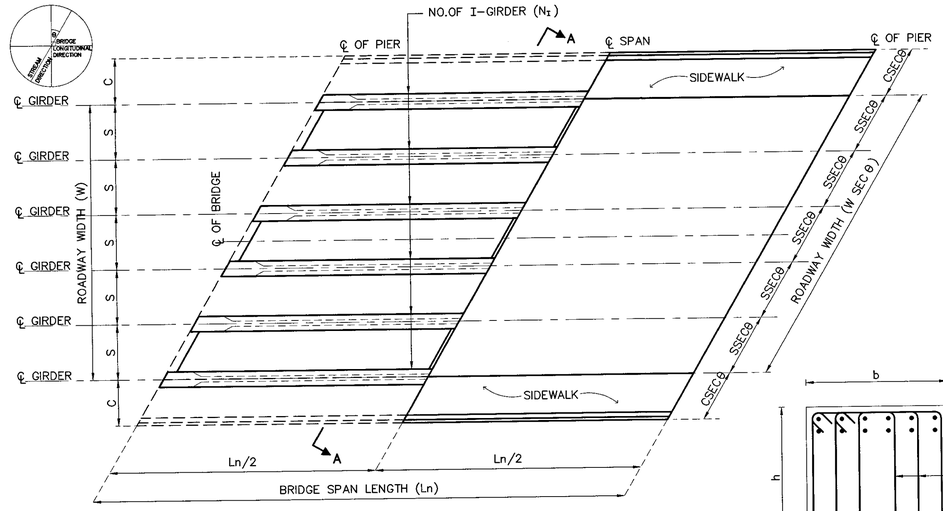

PLAN OF BRIDGE DECK

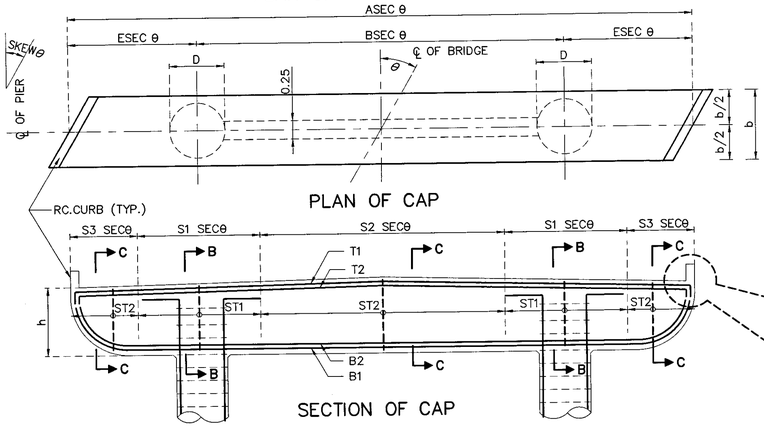

PLAN OF CAP

SECTION OF CAP

SECTION B–B

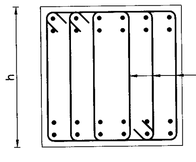

SECTION C–C

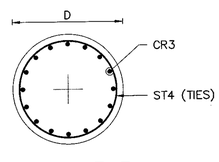

SECTION E–E

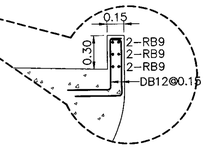

CURB DETAIL

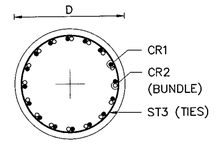

SECTION D–D

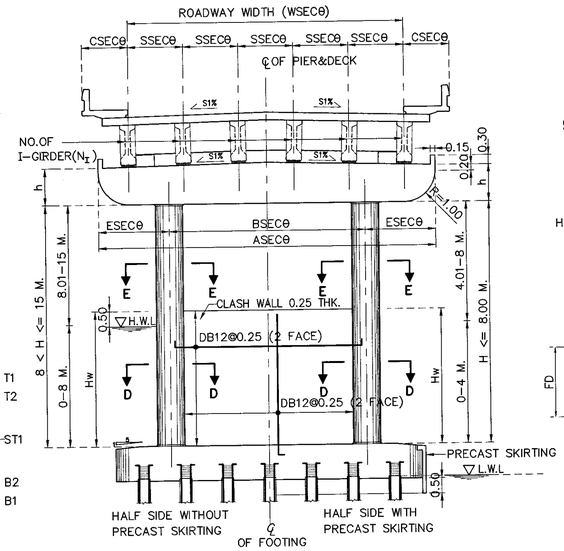

SECTION A–A

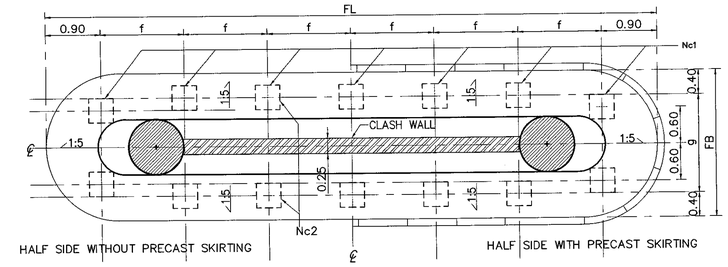

PLAN OF FOOTING

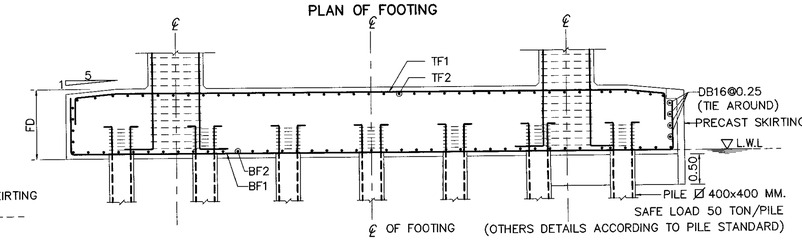

SECTION OF FOOTING

ADJUST LENGTH FOR SKEW BRIDGE

VALUE OF SECθ IN CASE OF SKEW BRIDGE (SKEW, θ)										
SKEW ANGLE, θ (DEGREE)	0	5	10	15	20	25	30	35	40	45
SEC θ	1.0000	1.0038	1.0154	1.0353	1.0642	1.1034	1.1547	1.2208	1.3054	1.4142

1.HEIGHT ≤ 8.00 M.

1.1 DIMENSION OF SUBSTRUCTURE & REBAR OF COLUMN

Ln (M.)	W (M.)	NO.OF I-GIRDER (N_I)	DIMENSION (M.)							C (SIDEWALK WIDTH)		REBAR COLUMN					
			A	B	E	S	S1	S2	S3	SW=1.00 M.	SW=1.50 M.	D (M.)	CR1	CR2	ST3	CR3	ST4
15.00 M. SEISMIC LEVEL 1	9.00	6	11.00	6.40	2.30	1.80	4.60	1.80	–	1.00	1.50	0.90	21–DB25	21–DB25	DB12@0.15	21–DB25	DB12@0.30
	10.00	6	12.00	7.00	2.50	2.00	5.00	2.00	–	1.00	1.50	1.00	23–DB25	19–DB25	DB12@0.15	23–DB25	DB12@0.30
	11.00	7	13.00	7.30	2.85	1.83	3.70	3.60	1.00	1.00	1.50	1.00	23–DB25	23–DB25	DB12@0.15	23–DB25	DB12@0.30
	12.00	7	13.00	7.30	2.85	1.83	3.70	3.60	1.00	1.00	–	1.00	24–DB25	24–DB25	DB12@0.15	24–DB25	DB12@0.30
15.00 M. SEISMIC LEVEL 2	9.00	6	11.00	6.40	2.30	1.80	4.60	1.80	–	1.00	1.50	0.90	21–DB25	21–DB25	DB12@0.15	21–DB25	DB12@0.30
	10.00	6	12.00	7.00	2.50	2.00	5.00	2.00	–	1.00	1.50	1.00	23–DB25	19–DB25	DB12@0.15	23–DB25	DB12@0.30
	11.00	7	13.00	7.30	2.85	1.83	3.70	3.60	1.00	1.00	1.50	1.00	23–DB25	23–DB25	DB12@0.15	23–DB25	DB12@0.30
	12.00	7	13.00	7.30	2.85	1.83	3.70	3.60	1.00	1.00	–	1.00	24–DB25	24–DB25	DB12@0.15	24–DB25	DB12@0.30

1.2 REBAR OF CAP BEAM

Ln (M.)	W (M.)	b	h	SKEW 0–30 DEGREE						SKEW 31–45 DEGREE					
				T1	T2	B1	B2	ST1(STIRRUPS)	ST2(STIRRUPS)	T1	T2	B1	B2	ST1(STIRRUPS)	ST2(STIRRUPS)
15.00 M. SEISMIC LEVEL 1	9.00	1.20	1.20	13–DB25	–	13–DB25	–	4–DB12@0.15	2–DB12@0.20	16–DB25	–	16–DB25	–	4–DB12@0.15	2–DB12@0.20
	10.00	1.20	1.20	14–DB25	–	14–DB25	–	4–DB12@0.15	2–DB12@0.20	17–DB25	–	17–DB25	–	4–DB12@0.15	2–DB12@0.20
	11.00	1.20	1.20	15–DB25	–	15–DB25	–	4–DB12@0.15	2–DB12@0.175	10–DB25	10–DB25	10–DB25	10–DB25	4–DB12@0.15	2–DB12@0.175
	12.00	1.20	1.20	16–DB25	–	16–DB25	–	4–DB12@0.15	2–DB12@0.175	11–DB25	11–DB25	11–DB25	11–DB25	4–DB12@0.15	2–DB12@0.175
15.00 M. SEISMIC LEVEL 2	9.00	1.20	1.20	13–DB25	–	13–DB25	–	4–DB12@0.15	2–DB12@0.20	16–DB25	–	16–DB25	–	4–DB12@0.15	2–DB12@0.20
	10.00	1.20	1.20	14–DB25	–	14–DB25	–	4–DB12@0.15	2–DB12@0.20	17–DB25	–	17–DB25	–	4–DB12@0.15	2–DB12@0.20
	11.00	1.20	1.20	15–DB25	–	15–DB25	–	4–DB12@0.15	2–DB12@0.175	10–DB25	10–DB25	10–DB25	10–DB25	4–DB12@0.15	2–DB12@0.175
	12.00	1.20	1.20	16–DB25	–	16–DB25	–	4–DB12@0.15	2–DB12@0.175	11–DB25	11–DB25	11–DB25	11–DB25	4–DB12@0.15	2–DB12@0.175

1.3 FOUNDATION & PILE

Ln (M.)	W (M.)	PILE SIZING (MM.)	Nc1	Nc2	NO.OF PILE	FOOTING DIMENSION (M.)					BOTTOM REBAR		TOP REBAR	
						FL	FB	FD	f	g	BF1	BF2	TF1	TF2
15.00 M. SEISMIC LEVEL 1	9.00	Ø 400x400	7	2	14	10.00	2.40	1.50	1.37	1.60	DB25@0.10	DB25@0.175	DB25@0.10	DB20@0.20
	10.00	Ø 400x400	7	2	14	11.00	2.40	1.50	1.53	1.60	DB25@0.175 **	DB25@0.175	DB25@0.175 **	DB20@0.20
	11.00	Ø 400x400	7	2	14	11.00	2.40	1.50	1.53	1.60	DB25@0.14 **	DB25@0.175	DB25@0.14 **	DB20@0.20
	12.00	Ø 400x400	7	2	14	12.00	2.40	1.50	1.53	1.60	DB25@0.14 **	DB25@0.175	DB25@0.14 **	DB20@0.20
15.00 M. SEISMIC LEVEL 2	9.00	Ø 400x400	7	2	14	10.00	2.40	1.50	1.37	1.60	DB25@0.10	DB25@0.175	DB25@0.10	DB20@0.20
	10.00	Ø 400x400	7	2	14	11.00	2.40	1.50	1.53	1.60	DB25@0.175 **	DB25@0.175	DB25@0.175 **	DB20@0.20
	11.00	Ø 400x400	7	2	14	11.00	2.40	1.50	1.53	1.60	DB25@0.14 **	DB25@0.175	DB25@0.14 **	DB20@0.20
	12.00	Ø 400x400	7	2	14	12.00	2.40	1.50	1.53	1.60	DB25@0.14 **	DB25@0.175	DB25@0.14 **	DB20@0.20

2. 8.00 M. < HEIGHT ≤ 15.00 M.

2.1 DIMENSION OF SUBSTRUCTURE & REBAR OF COLUMN

Ln (M.)	W (M.)	NO.OF I-GIRDER (N_I)	DIMENSION (M.)							C (SIDEWALK WIDTH)		REBAR COLUMN					
			A	B	E	S	S1	S2	S3	SW=1.00 M.	SW=1.50 M.	D (M.)	CR1	CR2	ST3	CR3	ST4
15.00 M. SEISMIC LEVEL 1	9.00	6	11.00	6.40	2.30	1.80	4.60	1.80	–	1.00	1.50	1.10	27–DB25	27–DB25	DB12@0.15	27–DB25	DB12@0.30
	10.00	6	12.00	7.00	2.50	2.00	5.00	2.00	–	1.00	1.50	1.20	30–DB25	30–DB25	DB12@0.15	30–DB25	DB12@0.30
	11.00	7	13.00	7.30	2.85	1.83	3.70	3.60	1.00	1.00	1.50	1.20	30–DB25	30–DB25	DB12@0.15	30–DB25	DB12@0.30
	12.00	7	13.00	7.30	2.85	1.83	3.70	3.60	1.00	1.00	–	1.20	30–DB25	30–DB25	DB12@0.15	30–DB25	DB12@0.30
15.00 M. SEISMIC LEVEL 2	9.00	6	11.00	6.40	2.30	1.80	4.60	1.80	–	1.00	1.50	1.10	27–DB25	27–DB25	DB12@0.15	27–DB25	DB12@0.30
	10.00	6	12.00	7.00	2.50	2.00	5.00	2.00	–	1.00	1.50	1.20	30–DB25	30–DB25	DB12@0.15	30–DB25	DB12@0.30
	11.00	7	13.00	7.30	2.85	1.83	3.70	3.60	1.00	1.00	1.50	1.20	30–DB25	30–DB25	DB12@0.15	30–DB25	DB12@0.30
	12.00	7	13.00	7.30	2.85	1.83	3.70	3.60	1.00	1.00	–	1.20	30–DB25	30–DB25	DB12@0.15	30–DB25	DB12@0.30

2.2 REBAR OF CAP BEAM

Ln (M.)	W (M.)	b	h	SKEW 0–30 DEGREE						SKEW 31–45 DEGREE					
				T1	T2	B1	B2	ST1(STIRRUPS)	ST2(STIRRUPS)	T1	T2	B1	B2	ST1(STIRRUPS)	ST2(STIRRUPS)
15.00 M. SEISMIC LEVEL 1	9.00	1.30	1.20	13–DB25	–	13–DB25	–	4–DB12@0.15	2–DB12@0.20	16–DB25	–	16–DB25	–	4–DB12@0.15	2–DB12@0.20
	10.00	1.40	1.20	14–DB25	–	14–DB25	–	4–DB12@0.15	2–DB12@0.20	18–DB25	–	18–DB25	–	4–DB12@0.15	2–DB12@0.20
	11.00	1.40	1.20	16–DB25	–	16–DB25	–	4–DB12@0.15	2–DB12@0.20	20–DB25	–	20–DB25	–	4–DB12@0.15	2–DB12@0.20
	12.00	1.40	1.20	16–DB25	–	16–DB25	–	4–DB12@0.15	2–DB12@0.20	12–DB25	12–DB25	12–DB25	12–DB25	4–DB12@0.15	2–DB12@0.20
15.00 M. SEISMIC LEVEL 2	9.00	1.30	1.20	13–DB25	–	13–DB25	–	4–DB12@0.15	2–DB12@0.20	16–DB25	–	16–DB25	–	4–DB12@0.15	2–DB12@0.20
	10.00	1.40	1.20	14–DB25	–	14–DB25	–	4–DB12@0.15	2–DB12@0.20	18–DB25	–	18–DB25	–	4–DB12@0.15	2–DB12@0.20
	11.00	1.40	1.20	16–DB25	–	16–DB25	–	4–DB12@0.15	2–DB12@0.20	20–DB25	–	20–DB25	–	4–DB12@0.15	2–DB12@0.20
	12.00	1.40	1.20	16–DB25	–	16–DB25	–	4–DB12@0.15	2–DB12@0.20	12–DB25	12–DB25	12–DB25	12–DB25	4–DB12@0.15	2–DB12@0.20

2.3 FOUNDATION & PILE

Ln (M.)	W (M.)	PILE SIZING (MM.)	Nc1	Nc2	NO.OF PILE	FOOTING DIMENSION (M.)					BOTTOM REBAR		TOP REBAR	
						FL	FB	FD	f	g	BF1	BF2	TF1	TF2
15.00 M. SEISMIC LEVEL 1	9.00	Ø 400x400	7	2	14	10.00	2.60	1.50	1.53	1.80	DB25@0.175 **	DB25@0.175	DB25@0.175 **	DB20@0.20
	10.00	Ø 400x400	8	2	16	11.00	2.60	1.50	1.31	1.80	DB25@0.14 **	DB25@0.175	DB25@0.14 **	DB20@0.20
	11.00	Ø 400x400	8	2	16	12.00	2.60	1.50	1.46	1.80	DB25@0.14 **	DB25@0.175	DB25@0.14 **	DB20@0.20
	12.00	Ø 400x400	8	2	16	12.00	2.60	1.50	1.46	1.80	DB25@0.125 **	DB25@0.175	DB25@0.125 **	DB20@0.20
15.00 M. SEISMIC LEVEL 2	9.00	Ø 400x400	7	2	14	10.00	2.60	1.50	1.53	1.80	DB25@0.175 **	DB25@0.175	DB25@0.175 **	DB20@0.20
	10.00	Ø 400x400	8	2	16	11.00	2.60	1.50	1.31	1.80	DB25@0.14 **	DB25@0.175	DB25@0.14 **	DB20@0.20
	11.00	Ø 400x400	8	2	16	12.00	2.60	1.50	1.46	1.80	DB25@0.14 **	DB25@0.175	DB25@0.14 **	DB20@0.20
	12.00	Ø 400x400	8	2	16	12.00	2.60	1.50	1.46	1.80	DB25@0.125 **	DB25@0.175	DB25@0.125 **	DB20@0.20

REMARK ; ** = 2 LAYERS

NOTE :
1. ALL DIMENSIONS SHOWN ARE IN METERS UNLESS OTHERWISE INDICATED
2. LIVE LOADING : VEHICLE LOAD HL–93
3. A MINIMUM ULTIMATE COMPRESSIVE STRENGTH FOR A 150X150X150 MM. CUBE AT 28 DAYS AS FOLLOWS :
   A) FOR COLUMN AND CAP BEAM 35 MPa
   B) FOR FOOTING 35 MPa
4. REBARS SMALLER THAN RB9 MM. SHALL BE TIS 20 GRADE SR 24 PLAIN ROUND BARS, OTHERS SHALL BE TIS 24 GRADE SD40 DEFORMED BARS UNLESS OTHERWISE INDICATED.

REF.	REVISION	SIGNATURE	DATE

KINGDOM OF THAILAND
MINISTRY OF TRANSPORT
DEPARTMENT OF HIGHWAYS

STANDARD DRAWING

TWO COLUMNS PIER WITH SIDEWALK (FOR I–GIRDER)
ROADWAY WIDTH 9.00 – 15.00 M., 15.00 M. SPAN,
8.00 M. < HEIGHT ≤ 15.00 M.

DESIGNED : D.O.H. & CONSULTANTS
CHECKED : BUREAU OF LOCATION & DESIGN
DATE : OCT 2015
SUBMITTED : (DIRECTOR OF LOCATION & DESIGN BUREAU)
SCALE : AS SHOWN
APPROVED : (FOR DIRECTOR GENERAL)
DWG NO. PC–214
SHEET NO. 274

D:\std dwg 2015\PC-214(REV00)

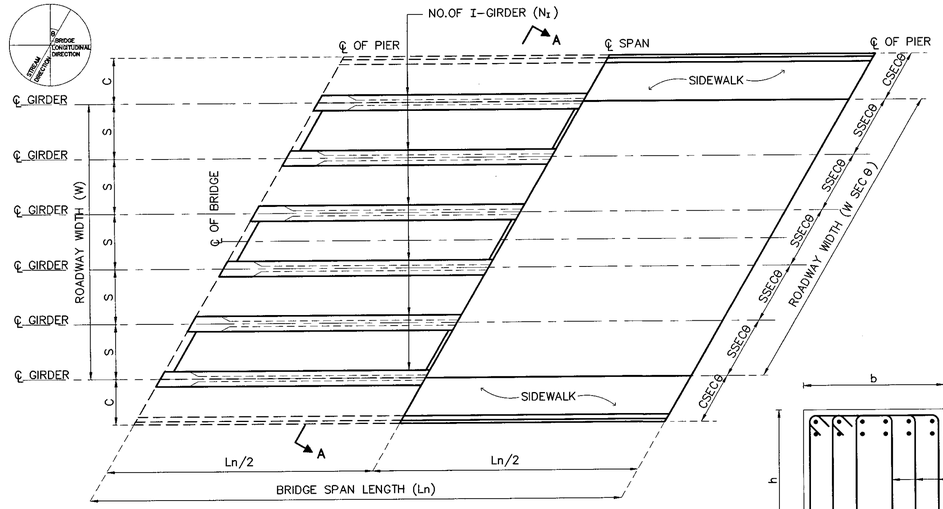

PLAN OF BRIDGE DECK

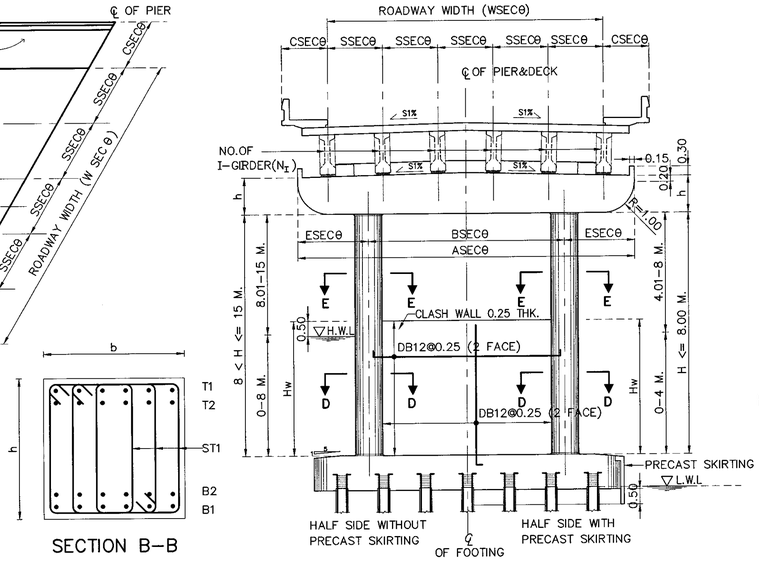

SECTION A-A

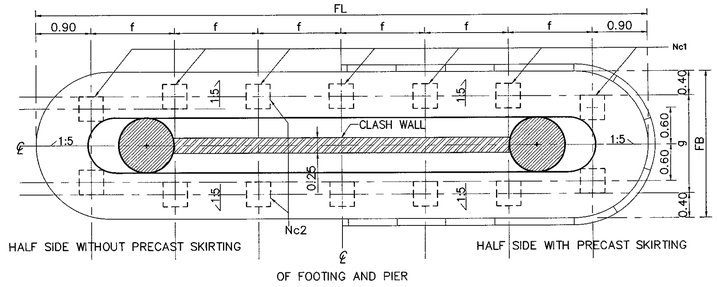

PLAN OF FOOTING

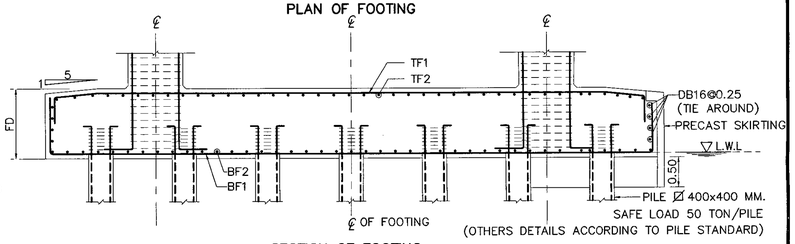

SECTION OF FOOTING

SECTION B-B

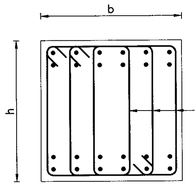

SECTION C-C

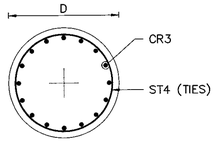

SECTION E-E

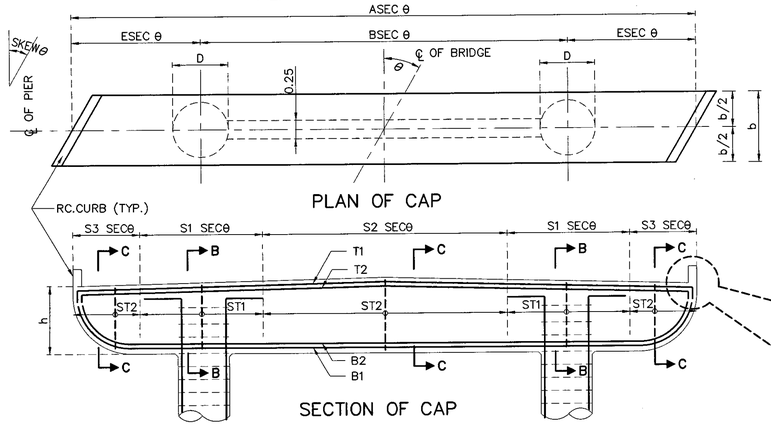

PLAN OF CAP

SECTION OF CAP

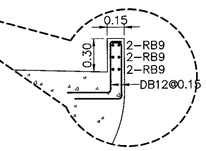

CURB DETAIL

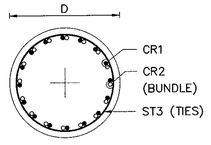

SECTION D-D

ADJUST LENGTH FOR SKEW BRIDGE

VALUE OF SECθ IN CASE OF SKEW BRIDGE (SKEW, θ)										
SKEW ANGLE, θ (DEGREE)	0	5	10	15	20	25	30	35	40	45
SEC θ	1.0000	1.0038	1.0154	1.0353	1.0642	1.1034	1.1547	1.2208	1.3054	1.4142

1.HEIGHT ≤ 8.00 M.

1.1 DIMENSION OF SUBSTRUCTURE & REBAR OF COLUMN

Ln (M.)	W (M.)	NO.OF I-GIRDER (N_I)	DIMENSION (M.)							C (SIDEWALK WIDTH)		REBAR COLUMN					
			A	B	E	S	S1	S2	S3	SW=1.00 M.	SW=1.50 M.	D (M.)	CR1	CR2	ST3	CR3	ST4
20.00 M. SEISMIC LEVEL 1	9.00	6	11.00	6.40	2.30	1.80	4.60	1.80	–	1.00	1.50	0.90	24–DB25	24–DB25	DB12@0.15	24–DB25	DB12@0.30
	10.00	6	12.00	7.00	2.50	2.00	5.00	2.00	–	1.00	1.50	1.00	25–DB25	25–DB25	DB12@0.15	25–DB25	DB12@0.30
	11.00	7	13.00	7.30	2.85	1.83	3.70	3.60	1.00	1.00	1.50	1.00	26–DB25	26–DB25	DB12@0.15	26–DB25	DB12@0.30
	12.00	7	13.00	7.30	2.85	1.83	3.70	3.60	1.00	1.00	–	1.00	26–DB25	26–DB25	DB12@0.15	26–DB25	DB12@0.30
20.00 M. SEISMIC LEVEL 2	9.00	6	11.00	6.40	2.30	1.80	4.60	1.80	–	1.00	1.50	0.90	24–DB25	24–DB25	DB12@0.15	24–DB25	DB12@0.30
	10.00	6	12.00	7.00	2.50	2.00	5.00	2.00	–	1.00	1.50	1.00	25–DB25	25–DB25	DB12@0.15	25–DB25	DB12@0.30
	11.00	7	13.00	7.30	2.85	1.83	3.70	3.60	1.00	1.00	1.50	1.00	26–DB25	26–DB25	DB12@0.15	26–DB25	DB12@0.30
	12.00	7	13.00	7.30	2.85	1.83	3.70	3.60	1.00	1.00	–	1.00	26–DB25	26–DB25	DB12@0.15	26–DB25	DB12@0.30

1.2 REBAR OF CAP BEAM

Ln (M.)	W (M.)	b	h	SKEW 0–30 DEGREE						SKEW 31–45 DEGREE					
				T1	T2	B1	B2	ST1(STIRRUPS)	ST2(STIRRUPS)	T1	T2	B1	B2	ST1(STIRRUPS)	ST2(STIRRUPS)
20.00 M. SEISMIC LEVEL 1	9.00	1.20	1.20	14–DB25	–	14–DB25	–	4–DB12@0.15	2–DB12@0.20	10–DB25	10–DB25	10–DB25	10–DB25	4–DB12@0.15	2–DB12@0.20
	10.00	1.20	1.20	15–DB25	–	15–DB25	–	4–DB12@0.15	2–DB12@0.20	10–DB25	10–DB25	10–DB25	10–DB25	4–DB12@0.15	2–DB12@0.20
	11.00	1.20	1.20	10–DB25	10–DB25	10–DB25	10–DB25	4–DB12@0.15	2–DB12@0.20	13–DB25	13–DB25	13–DB25	13–DB25	4–DB12@0.15	2–DB12@0.20
	12.00	1.20	1.20	10–DB25	10–DB25	10–DB25	10–DB25	4–DB12@0.15	2–DB12@0.20	13–DB25	13–DB25	13–DB25	13–DB25	4–DB12@0.15	2–DB12@0.20
20.00 M. SEISMIC LEVEL 2	9.00	1.20	1.20	14–DB25	–	14–DB25	–	4–DB12@0.15	2–DB12@0.20	10–DB25	10–DB25	10–DB25	10–DB25	4–DB12@0.15	2–DB12@0.20
	10.00	1.20	1.20	15–DB25	–	15–DB25	–	4–DB12@0.15	2–DB12@0.20	10–DB25	10–DB25	10–DB25	10–DB25	4–DB12@0.15	2–DB12@0.20
	11.00	1.20	1.20	10–DB25	10–DB25	10–DB25	10–DB25	4–DB12@0.15	2–DB12@0.20	13–DB25	13–DB25	13–DB25	13–DB25	4–DB12@0.15	2–DB12@0.20
	12.00	1.20	1.20	10–DB25	10–DB25	10–DB25	10–DB25	4–DB12@0.15	2–DB12@0.20	13–DB25	13–DB25	13–DB25	13–DB25	4–DB12@0.15	2–DB12@0.20

1.3 FOUNDATION & PILE

Ln (M.)	W (M.)	PILE SIZING (MM.)	Nc1	Nc2	NO.OF PILE	FOOTING DIMENSION (M.)					BOTTOM REBAR		TOP REBAR	
						FL	FB	FD	f	g	BF1	BF2	TF1	TF2
20.00 M. SEISMIC LEVEL 1	9.00	⊠ 400x400	7	2	14	10.00	2.40	1.50	1.37	1.60	DB28@0.175 **	DB25@0.175	DB28@0.175 **	DB20@0.20
	10.00	⊠ 400x400	7	2	14	11.00	2.40	1.50	1.53	1.60	DB28@0.15 **	DB25@0.175	DB28@0.15 **	DB20@0.20
	11.00	⊠ 400x400	7	2	14	11.00	2.40	1.50	1.53	1.60	DB28@0.125 **	DB25@0.175	DB28@0.125 **	DB20@0.20
	12.00	⊠ 400x400	7	2	14	11.00	2.40	1.50	1.53	1.60	DB28@0.125 **	DB25@0.175	DB28@0.125 **	DB20@0.20
20.00 M. SEISMIC LEVEL 2	9.00	⊠ 400x400	7	2	14	10.00	2.40	1.50	1.37	1.60	DB28@0.175 **	DB25@0.175	DB28@0.175 **	DB20@0.20
	10.00	⊠ 400x400	7	2	14	11.00	2.40	1.50	1.53	1.60	DB28@0.15 **	DB25@0.175	DB28@0.15 **	DB20@0.20
	11.00	⊠ 400x400	7	2	14	11.00	2.40	1.50	1.53	1.60	DB28@0.125 **	DB25@0.175	DB28@0.125 **	DB20@0.20
	12.00	⊠ 400x400	7	2	14	11.00	2.40	1.50	1.53	1.60	DB28@0.125 **	DB25@0.175	DB28@0.125 **	DB20@0.20

2. 8.00 M. < HEIGHT ≤ 15.00 M.

2.1 DIMENSION OF SUBSTRUCTURE & REBAR OF COLUMN

Ln (M.)	W (M.)	NO.OF I-GIRDER (N_I)	DIMENSION (M.)							C (SIDEWALK WIDTH)		REBAR COLUMN					
			A	B	E	S	S1	S2	S3	SW=1.00 M.	SW=1.50 M.	D (M.)	CR1	CR2	ST3	CR3	ST4
20.00 M. SEISMIC LEVEL 1	9.00	6	11.00	6.40	2.30	1.80	4.60	1.80	–	1.00	1.50	1.10	26–DB25	26–DB25	DB12@0.15	26–DB25	DB12@0.30
	10.00	6	12.00	7.00	2.50	2.00	5.00	2.00	–	1.00	1.50	1.20	28–DB25	28–DB25	DB12@0.15	28–DB25	DB12@0.30
	11.00	7	13.00	7.30	2.85	1.83	3.70	3.60	1.00	1.00	1.50	1.20	30–DB25	30–DB25	DB12@0.15	30–DB25	DB12@0.30
	12.00	7	13.00	7.30	2.85	1.83	3.70	3.60	1.00	1.00	–	1.20	30–DB25	30–DB25	DB12@0.15	30–DB25	DB12@0.30
20.00 M. SEISMIC LEVEL 2	9.00	6	11.00	6.40	2.30	1.80	4.60	1.80	–	1.00	1.50	1.10	31–DB25	31–DB25	DB12@0.15	31–DB25	DB12@0.30
	10.00	6	12.00	7.00	2.50	2.00	5.00	2.00	–	1.00	1.50	1.20	31–DB25	31–DB25	DB12@0.15	31–DB25	DB12@0.30
	11.00	7	13.00	7.30	2.85	1.83	3.70	3.60	1.00	1.00	1.50	1.20	32–DB25	32–DB25	DB12@0.15	32–DB25	DB12@0.30
	12.00	7	13.00	7.30	2.85	1.83	3.70	3.60	1.00	1.00	–	1.20	32–DB25	32–DB25	DB12@0.15	32–DB25	DB12@0.30

2.2 REBAR OF CAP BEAM

Ln (M.)	W (M.)	b	h	SKEW 0–30 DEGREE						SKEW 31–45 DEGREE					
				T1	T2	B1	B2	ST1(STIRRUPS)	ST2(STIRRUPS)	T1	T2	B1	B2	ST1(STIRRUPS)	ST2(STIRRUPS)
20.00 M. SEISMIC LEVEL 1	9.00	1.30	1.20	17–DB25	–	17–DB25	–	4–DB12@0.15	2–DB12@0.20	10–DB25	10–DB25	8–DB25	10–DB25	4–DB12@0.15	2–DB12@0.20
	10.00	1.40	1.20	16–DB25	–	16–DB25	–	4–DB12@0.15	2–DB12@0.20	10–DB25	10–DB25	8–DB25	10–DB25	4–DB12@0.15	2–DB12@0.20
	11.00	1.40	1.20	10–DB25	10–DB25	10–DB25	10–DB25	4–DB12@0.15	2–DB12@0.20	14–DB25	14–DB25	8–DB25	14–DB25	4–DB12@0.15	2–DB12@0.20
	12.00	1.40	1.20	10–DB25	10–DB25	10–DB25	10–DB25	4–DB12@0.15	2–DB12@0.20	14–DB25	14–DB25	8–DB25	14–DB25	4–DB12@0.15	2–DB12@0.20
20.00 M. SEISMIC LEVEL 2	9.00	1.30	1.20	17–DB25	–	17–DB25	–	4–DB12@0.15	2–DB12@0.20	10–DB25	10–DB25	8–DB25	10–DB25	4–DB12@0.15	2–DB12@0.20
	10.00	1.40	1.20	16–DB25	–	16–DB25	–	4–DB12@0.15	2–DB12@0.20	10–DB25	10–DB25	8–DB25	10–DB25	4–DB12@0.15	2–DB12@0.20
	11.00	1.40	1.20	10–DB25	10–DB25	10–DB25	10–DB25	4–DB12@0.15	2–DB12@0.20	14–DB25	14–DB25	8–DB25	14–DB25	4–DB12@0.15	2–DB12@0.20
	12.00	1.40	1.20	10–DB25	10–DB25	10–DB25	10–DB25	4–DB12@0.15	2–DB12@0.20	14–DB25	14–DB25	8–DB25	14–DB25	4–DB12@0.15	2–DB12@0.20

2.3 FOUNDATION & PILE

Ln (M.)	W (M.)	PILE SIZING (MM.)	Nc1	Nc2	NO.OF PILE	FOOTING DIMENSION (M.)					BOTTOM REBAR		TOP REBAR	
						FL	FB	FD	f	g	BF1	BF2	TF1	TF2
20.00 M. SEISMIC LEVEL 1	9.00	⊠ 400x400	8	2	16	11.00	2.60	1.50	1.31	1.80	DB28@0.175 **	DB25@0.175	DB28@0.175 **	DB20@0.20
	10.00	⊠ 400x400	8	2	16	11.00	2.60	1.50	1.31	1.80	DB28@0.15 **	DB25@0.175	DB28@0.15 **	DB20@0.20
	11.00	⊠ 400x400	9	2	18	12.00	2.60	1.50	1.28	1.80	DB28@0.125 **	DB25@0.175	DB28@0.125 **	DB20@0.20
	12.00	⊠ 400x400	9	2	18	12.00	2.60	1.50	1.28	1.80	DB28@0.10 **	DB25@0.175	DB28@0.10 **	DB20@0.20
20.00 M. SEISMIC LEVEL 2	9.00	⊠ 400x400	8	2	16	11.00	2.60	1.50	1.31	1.80	DB28@0.175 **	DB25@0.175	DB28@0.175 **	DB20@0.20
	10.00	⊠ 400x400	8	2	16	11.00	2.60	1.50	1.31	1.80	DB28@0.15 **	DB25@0.175	DB28@0.15 **	DB20@0.20
	11.00	⊠ 400x400	9	2	18	12.00	2.60	1.50	1.28	1.80	DB28@0.125 **	DB25@0.175	DB28@0.125 **	DB20@0.20
	12.00	⊠ 400x400	9	2	18	12.00	2.60	1.50	1.28	1.80	DB28@0.10 **	DB25@0.175	DB28@0.10 **	DB20@0.20

REMARK ; ** = 2 LAYERS

NOTE :
1. ALL DIMENSIONS SHOWN ARE IN METERS UNLESS OTHERWISE INDICATED
2. LIVE LOADING : VEHICLE LOAD HL-93
3. A MINIMUM ULTIMATE COMPRESSIVE STRENGTH FOR A 150X150X150 MM. CUBE AT 28 DAYS AS FOLLOWS :
   A) FOR COLUMN AND CAP BEAM 35 MPa
   B) FOR FOOTING 35 MPa
4. REBARS SMALLER THAN RB9 MM. SHALL BE TIS 20 GRADE SR 24 PLAIN ROUND BARS, OTHERS SHALL BE TIS 24 GRADE SD40 DEFORMED BARS UNLESS OTHERWISE INDICATED.

REF.	REVISION	SIGNATURE	DATE

KINGDOM OF THAILAND

MINISTRY OF TRANSPORT

DEPARTMENT OF HIGHWAYS

STANDARD DRAWING

TWO COLUMNS PIER WITH SIDEWALK (FOR I-GIRDER)
ROADWAY WIDTH 9.00 – 15.00 M., 20.00 M. SPAN,
8.00 M. < HEIGHT ≤ 15.00 M.

DESIGNED : D.O.H. & CONSULTANTS | CHECKED : BUREAU OF LOCATION & DESIGN | DATE : OCT 2015

SUBMITTED : (DIRECTOR OF LOCATION & DESIGN BUREAU) | SCALE : AS SHOWN

APPROVED : (FOR DIRECTOR GENERAL) | DWG NO. PC-215 | SHEET NO. 275

D:\std dwg 2015\PC-215(REV00)

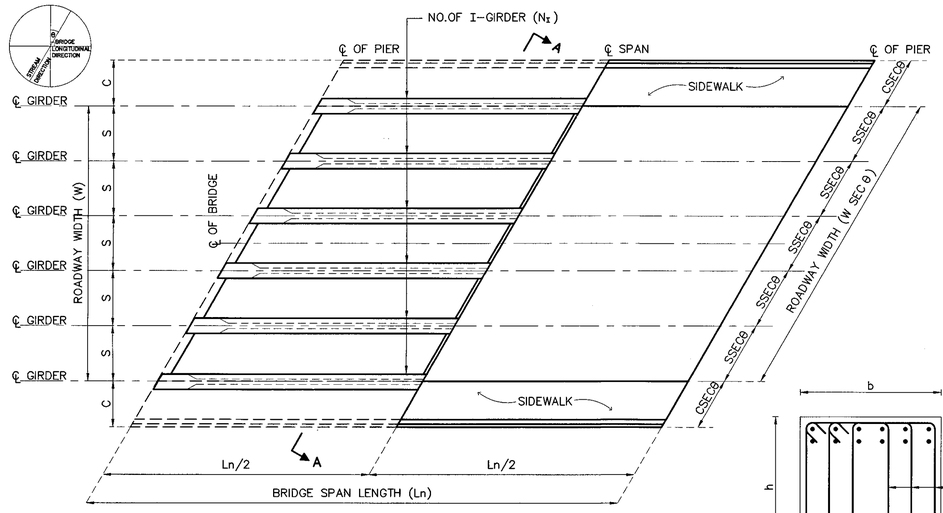

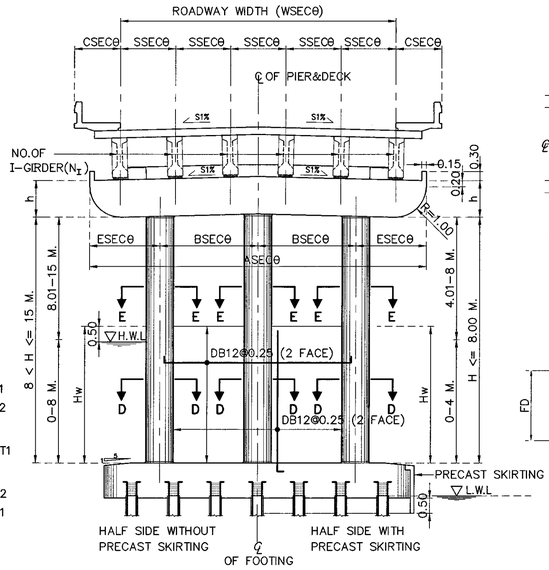

SECTION A–A

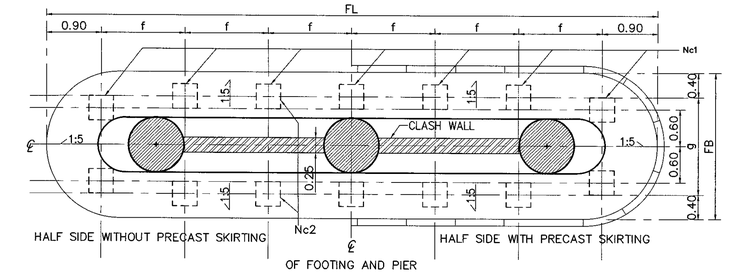

PLAN OF FOOTING

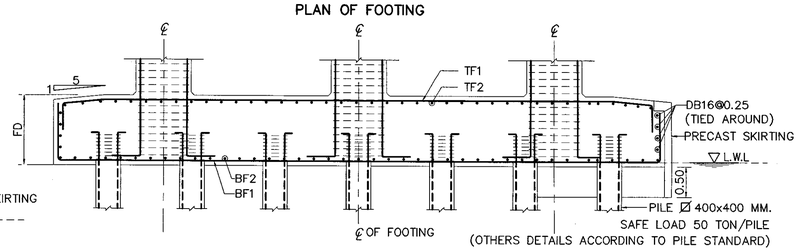

SECTION OF FOOTING

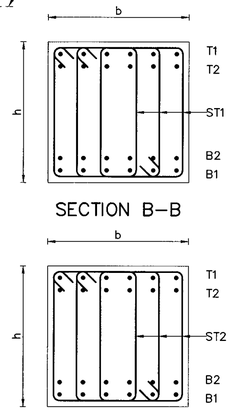

SECTION B–B

SECTION C–C

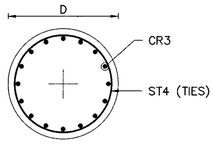

SECTION E–E

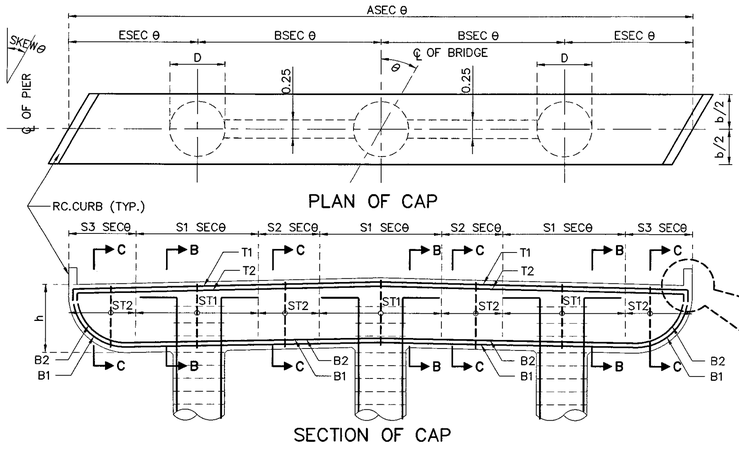

PLAN OF CAP

SECTION OF CAP

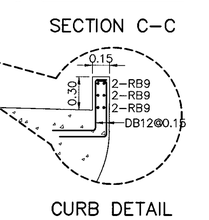

CURB DETAIL

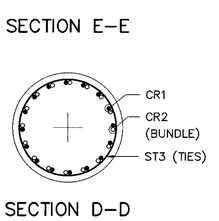

SECTION D–D

ADJUST LENGTH FOR SKEW BRIDGE

	VALUE OF SECθ IN CASE OF SKEW BRIDGE (SKEW, θ)									
SKEW ANGLE, θ (DEGREE)	0	5	10	15	20	25	30	35	40	45
SEC θ	1.0000	1.0038	1.0154	1.0353	1.0642	1.1034	1.1547	1.2208	1.3054	1.4142

1.HEIGHT ≤ 8.00 M.

1.1 DIMENSION OF SUBSTRUCTURE & REBAR OF COLUMN

Ln (M.)	W (M.)	NO.OF I-GIRDER (N_I)	DIMENSION (M.)							C (SIDEWALK WIDTH)		REBAR COLUMN					
			A	B	E	S	S1	S2	S3	SW=1.00 M.	SW=1.50 M.	D (M.)	CR1	CR2	ST3	CR3	ST4
15.00 M. SEISMIC LEVEL 1	13.00	8	15.00	5.30	2.20	1.86	2.40	2.90	1.00	1.00	1.50	0.80	25–DB25	25–DB25	DB12@0.15	25–DB25	DB12@0.30
	14.00	8	16.00	5.70	2.30	2.00	2.60	3.10	1.00	1.00	1.50	0.80	26–DB25	26–DB25	DB12@0.15	26–DB25	DB12@0.30
	15.00	8	16.00	5.70	2.30	2.00	2.60	3.10	1.00	1.00	–	0.80	28–DB25	28–DB25	DB12@0.15	22–DB28	DB12@0.30
15.00 M. SEISMIC LEVEL 2	13.00	8	15.00	5.30	2.20	1.86	2.40	2.90	1.00	1.00	1.50	0.80	25–DB25	25–DB25	DB12@0.15	25–DB25	DB12@0.30
	14.00	8	16.00	5.70	2.30	2.00	2.60	3.10	1.00	1.00	1.50	0.80	26–DB25	26–DB25	DB12@0.15	26–DB25	DB12@0.30
	15.00	8	16.00	5.70	2.30	2.00	2.60	3.10	1.00	1.00	–	0.80	28–DB25	28–DB25	DB12@0.15	22–DB28	DB12@0.30

1.2 REBAR OF CAP BEAM

Ln (M.)	W (M.)	b	h	SKEW 0–30						SKEW 31–45					
				T1	T2	B1	B2	ST1(STIRRUPS)	ST2(STIRRUPS)	T1	T2	B1	B2	ST1(STIRRUPS)	ST2(STIRRUPS)
15.00 M. SEISMIC LEVEL 1	13.00	1.00	0.80	13–DB25	–	13–DB25	–	5–DB12@0.15	4–DB12@0.30	13–DB25	–	13–DB25	–	5–DB12@0.15	4–DB12@0.30
	14.00	1.00	0.80	14–DB25	–	14–DB25	–	6–DB12@0.15	4–DB12@0.30	14–DB25	–	14–DB25	–	6–DB12@0.15	4–DB12@0.30
	15.00	1.00	0.80	14–DB25	–	14–DB25	–	6–DB12@0.15	4–DB12@0.30	14–DB25	–	14–DB25	–	6–DB12@0.15	4–DB12@0.30
15.00 M. SEISMIC LEVEL 2	13.00	1.00	0.80	13–DB25	–	13–DB25	–	5–DB12@0.15	4–DB12@0.30	13–DB25	–	13–DB25	–	5–DB12@0.15	4–DB12@0.30
	14.00	1.00	0.80	14–DB25	–	14–DB25	–	6–DB12@0.15	4–DB12@0.30	14–DB25	–	14–DB25	–	6–DB12@0.15	4–DB12@0.30
	15.00	1.00	0.80	14–DB25	–	14–DB25	–	6–DB12@0.15	4–DB12@0.30	14–DB25	–	14–DB25	–	6–DB12@0.15	4–DB12@0.30

1.3 FOUNDATION & PILE

Ln (M.)	W (M.)	PILE SIZING (MM.)	Nc1	Nc2	NO.OF PILE	FOOTING DIMENSION (M.)					BOTTOM REBAR		TOP REBAR	
						FL	FB	FD	f	g	BF1	BF2	TF1	TF2
15.00 M. SEISMIC LEVEL 1	13.00	☒ 400x400	7	2	14	14.00	2.40	1.20	2.03	1.60	DB25@0.14	DB25@0.20	DB25@0.14	DB20@0.25
	14.00	☒ 400x400	7	2	14	15.00	2.40	1.20	2.20	1.60	DB25@0.13	DB25@0.20	DB25@0.13	DB20@0.25
	15.00	☒ 400x400	7	2	14	15.00	2.40	1.20	2.20	1.60	DB25@0.13	DB25@0.20	DB25@0.13	DB20@0.25
15.00 M. SEISMIC LEVEL 2	13.00	☒ 400x400	7	2	14	14.00	2.40	1.20	2.03	1.60	DB25@0.14	DB25@0.20	DB25@0.14	DB20@0.25
	14.00	☒ 400x400	7	2	14	15.00	2.40	1.20	2.20	1.60	DB25@0.13	DB25@0.20	DB25@0.13	DB20@0.25
	15.00	☒ 400x400	7	2	14	15.00	2.40	1.20	2.20	1.60	DB25@0.13	DB25@0.20	DB25@0.13	DB20@0.25

2. 8.00 M. < HEIGHT ≤ 15.00 M.

2.1 DIMENSION OF SUBSTRUCTURE & REBAR OF COLUMN

Ln (M.)	W (M.)	NO.OF I-GIRDER (N_I)	DIMENSION (M.)							C (SIDEWALK WIDTH)		REBAR COLUMN					
			A	B	E	S	S1	S2	S3	SW=1.00 M.	SW=1.50 M.	D (M.)	CR1	CR2	ST3	CR3	ST4
15.00 M. SEISMIC LEVEL 1	13.00	8	15.00	5.30	2.20	1.86	2.40	2.90	1.00	1.00	1.50	1.00	29–DB25	27–DB25	DB12@0.15	29–DB25	DB12@0.30
	14.00	8	16.00	5.70	2.30	2.00	2.60	3.10	1.00	1.00	1.50	1.00	29–DB25	27–DB25	DB12@0.15	29–DB25	DB12@0.30
	15.00	8	16.00	5.70	2.30	2.00	2.60	3.10	1.00	1.00	–	1.00	29–DB25	27–DB25	DB12@0.15	29–DB25	DB12@0.30
15.00 M. SEISMIC LEVEL 2	13.00	8	15.00	5.30	2.20	1.86	2.40	2.90	1.00	1.00	1.50	1.00	29–DB25	27–DB25	DB12@0.15	29–DB25	DB12@0.30
	14.00	8	16.00	5.70	2.30	2.00	2.60	3.10	1.00	1.00	1.50	1.00	29–DB25	27–DB25	DB12@0.15	29–DB25	DB12@0.30
	15.00	8	16.00	5.70	2.30	2.00	2.60	3.10	1.00	1.00	–	1.00	29–DB25	27–DB25	DB12@0.15	29–DB25	DB12@0.30

2.2 REBAR OF CAP BEAM

Ln (M.)	W (M.)	b	h	SKEW 0–30						SKEW 31–45					
				T1	T2	B1	B2	ST1(STIRRUPS)	ST2(STIRRUPS)	T1	T2	B1	B2	ST1(STIRRUPS)	ST2(STIRRUPS)
15.00 M. SEISMIC LEVEL 1	13.00	1.20	1.00	11–DB25	–	11–DB25	–	4–DB12@0.15	4–DB12@0.30	11–DB25	–	11–DB25	–	4–DB12@0.15	4–DB12@0.30
	14.00	1.20	1.00	12–DB25	–	12–DB25	–	4–DB12@0.15	4–DB12@0.30	12–DB25	–	12–DB25	–	4–DB12@0.15	4–DB12@0.30
	15.00	1.20	1.00	12–DB25	–	12–DB25	–	4–DB12@0.15	4–DB12@0.30	12–DB25	–	12–DB25	–	4–DB12@0.15	4–DB12@0.30
15.00 M. SEISMIC LEVEL 2	13.00	1.20	1.00	11–DB25	–	11–DB25	–	4–DB12@0.15	4–DB12@0.30	11–DB25	–	11–DB25	–	4–DB12@0.15	4–DB12@0.30
	14.00	1.20	1.00	12–DB25	–	12–DB25	–	4–DB12@0.15	4–DB12@0.30	12–DB25	–	12–DB25	–	4–DB12@0.15	4–DB12@0.30
	15.00	1.20	1.00	12–DB25	–	12–DB25	–	4–DB12@0.15	4–DB12@0.30	12–DB25	–	12–DB25	–	4–DB12@0.15	4–DB12@0.30

2.3 FOUNDATION & PILE

Ln (M.)	W (M.)	PILE SIZING (MM.)	Nc1	Nc2	NO.OF PILE	FOOTING DIMENSION (M.)					BOTTOM REBAR		TOP REBAR	
						FL	FB	FD	f	g	BF1	BF2	TF1	TF2
15.00 M. SEISMIC LEVEL 1	13.00	☒ 400x400	8	2	16	14.00	2.60	1.20	1.74	1.80	DB25@0.14	DB25@0.20	DB25@0.14	DB20@0.25
	14.00	☒ 400x400	8	2	16	15.00	2.60	1.20	1.89	1.80	DB25@0.12	DB25@0.20	DB25@0.12	DB20@0.25
	15.00	☒ 400x400	8	2	16	15.00	2.60	1.20	1.89	1.80	DB25@0.12	DB25@0.20	DB25@0.12	DB20@0.25
15.00 M. SEISMIC LEVEL 2	13.00	☒ 400x400	8	2	16	14.00	2.60	1.20	1.74	1.80	DB25@0.14	DB25@0.20	DB25@0.14	DB20@0.25
	14.00	☒ 400x400	8	2	16	15.00	2.60	1.20	1.89	1.80	DB25@0.12	DB25@0.20	DB25@0.12	DB20@0.25
	15.00	☒ 400x400	8	2	16	15.00	2.60	1.20	1.89	1.80	DB25@0.12	DB25@0.20	DB25@0.12	DB20@0.25

NOTE :
1. ALL DIMENSIONS SHOWN ARE IN METERS UNLESS OTHERWISE INDICATED
2. LIVE LOADING : VEHICLE LOAD HL-93
3. A MINIMUM ULTIMATE COMPRESSIVE STRENGTH FOR A 150X150X150 MM. CUBE AT 28 DAYS AS FOLLOWS :
   A) FOR COLUMN AND CAP BEAM 35 MPa
   B) FOR FOOTING 35 MPa
4. REBARS SMALLER THAN RB9 MM. SHALL BE TIS 20 GRADE SR 24 PLAIN ROUND BARS, OTHERS SHALL BE TIS 24 GRADE SD40 DEFORMED BARS UNLESS OTHERWISE INDICATED.

REF.	REVISION	SIGNATURE	DATE

KINGDOM OF THAILAND

MINISTRY OF TRANSPORT
DEPARTMENT OF HIGHWAYS

STANDARD DRAWING

THREE COLUMNS PIER WITH SIDEWALK (FOR I-GIRDER)
ROADWAY WIDTH 13.00 – 15.00 M., 15.00 M. SPAN,
HEIGHT ≤ 15.00 M.

DESIGNED : D.O.H. & CONSULTANTS
CHECKED : BUREAU OF LOCATION & DESIGN
DATE : OCT 2015
SUBMITTED : (DIRECTOR OF LOCATION & DESIGN BUREAU)
SCALE : AS SHOWN
DWG NO. PC–216
APPROVED : (FOR DIRECTOR GENERAL)
SHEET NO. 276

D:\std dwg 2015\PC-216(REV00)

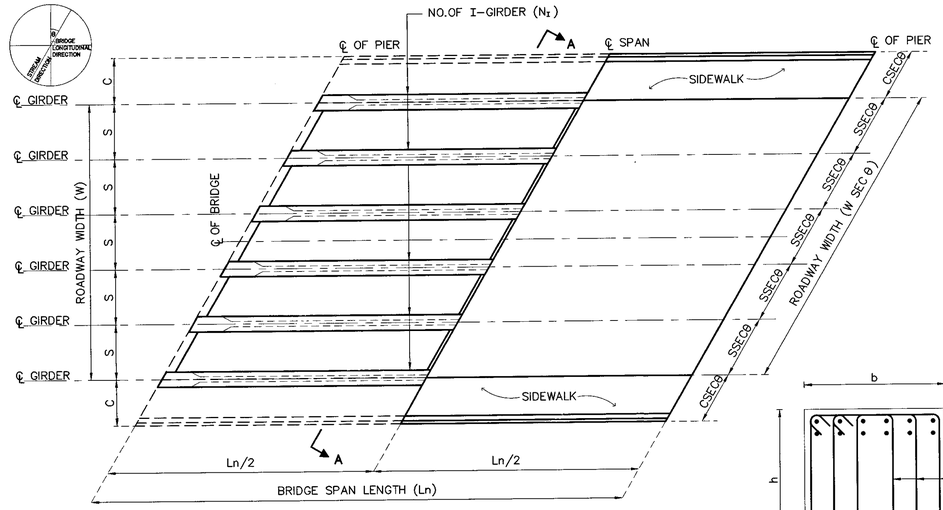

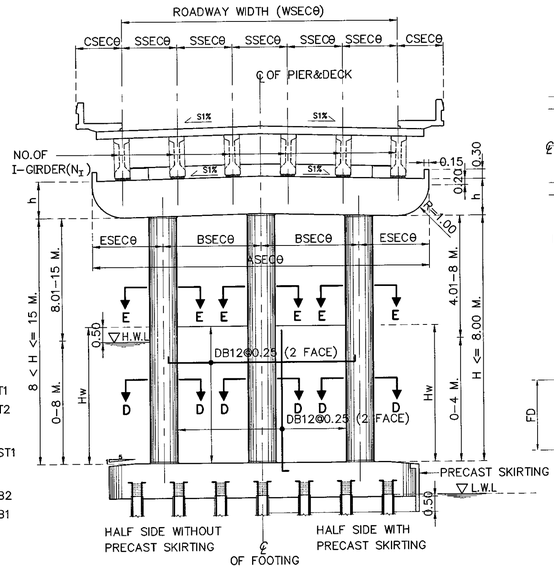

SECTION A–A

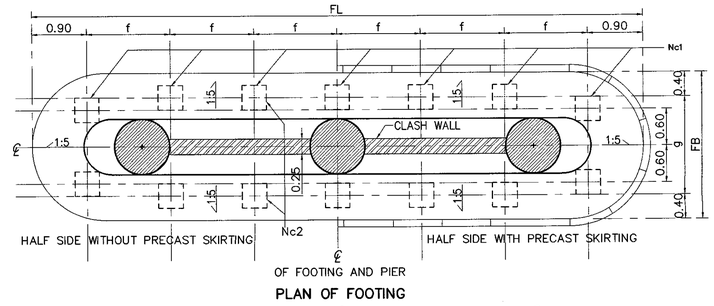

PLAN OF FOOTING

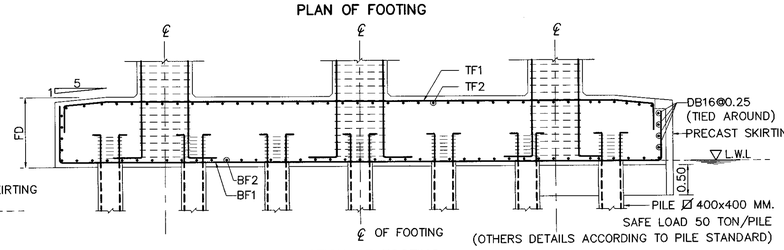

SECTION OF FOOTING

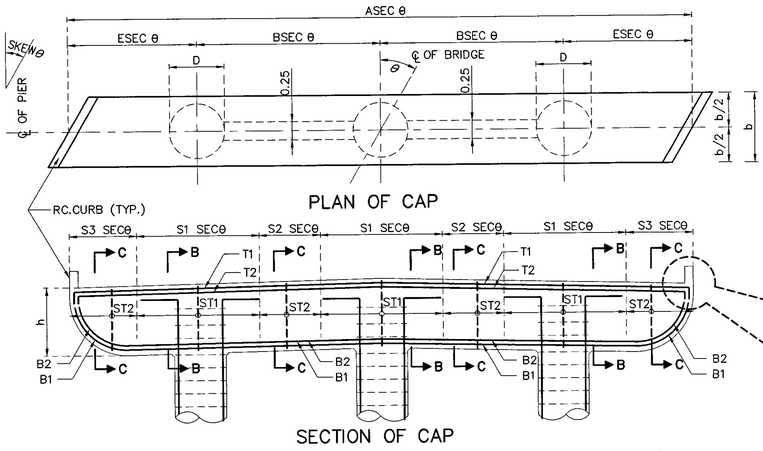

SECTION B–B

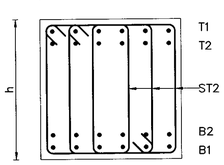

SECTION C–C

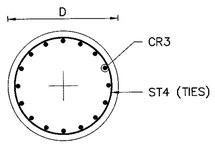

SECTION E–E

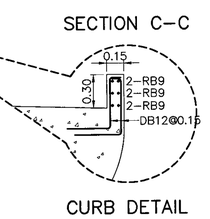

CURB DETAIL

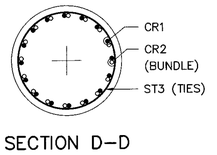

SECTION D–D

ADJUST LENGTH FOR SKEW BRIDGE

VALUE OF SECθ IN CASE OF SKEW BRIDGE (SKEW, θ)										
SKEW ANGLE, θ (DEGREE)	0	5	10	15	20	25	30	35	40	45
SEC θ	1.0000	1.0038	1.0154	1.0353	1.0642	1.1034	1.1547	1.2208	1.3054	1.4142

1.HEIGHT ≤ 8.00 M.

1.1 DIMENSION OF SUBSTRUCTURE & REBAR OF COLUMN

Ln (M.)	W (M.)	NO.OF I-GIRDER (N_I)	DIMENSION (M.)							C (SIDEWALK WIDTH)		REBAR COLUMN					
			A	B	E	S	S1	S2	S3	SW=1.00 M.	SW=1.50 M.	D (M.)	CR1	CR2	ST3	CR3	ST4
20.00 M. SEISMIC LEVEL 1	13.00	8	15.00	5.30	2.20	1.86	2.40	2.90	1.00	1.00	1.50	0.80	26–DB25	24–DB25	DB12@0.15	26–DB25	DB12@0.30
	14.00	8	16.00	5.70	2.30	2.00	2.60	3.10	1.00	1.00	1.50	0.80	26–DB25	24–DB25	DB12@0.15	26–DB25	DB12@0.30
	15.00	8	16.00	5.70	2.30	2.00	2.60	3.10	1.00	1.00	–	0.80	26–DB25	24–DB25	DB12@0.15	26–DB25	DB12@0.30
20.00 M. SEISMIC LEVEL 2	13.00	8	15.00	5.30	2.20	1.86	2.40	2.90	1.00	1.00	1.50	0.80	26–DB25	24–DB25	DB12@0.15	26–DB25	DB12@0.30
	14.00	8	16.00	5.70	2.30	2.00	2.60	3.10	1.00	1.00	1.50	0.80	26–DB25	24–DB25	DB12@0.15	26–DB25	DB12@0.30
	15.00	8	16.00	5.70	2.30	2.00	2.60	3.10	1.00	1.00	–	0.80	26–DB25	24–DB25	DB12@0.15	26–DB25	DB12@0.30

1.2 REBAR OF CAP BEAM

Ln (M.)	W (M.)	b	h	SKEW 0–30						SKEW 31–45					
				T1	T2	B1	B2	ST1(STIRRUPS)	ST2(STIRRUPS)	T1	T2	B1	B2	ST1(STIRRUPS)	ST2(STIRRUPS)
20.00 M. SEISMIC LEVEL 1	13.00	1.00	0.80	15–DB25	–	15–DB25	–	6–DB12@0.15	4–DB12@0.15	15–DB25	–	15–DB25	–	6–DB12@0.15	4–DB12@0.15
	14.00	1.00	0.80	14–DB25	3–DB25	14–DB25	3–DB25	7–DB12@0.15	4–DB12@0.15	14–DB25	3–DB25	14–DB25	3–DB25	7–DB12@0.15	4–DB12@0.15
	15.00	1.00	0.80	14–DB25	3–DB25	14–DB25	3–DB25	7–DB12@0.15	4–DB12@0.15	14–DB25	3–DB25	14–DB25	3–DB25	7–DB12@0.15	4–DB12@0.15
20.00 M. SEISMIC LEVEL 2	13.00	1.00	0.80	15–DB25	–	15–DB25	–	6–DB12@0.15	4–DB12@0.15	15–DB25	–	15–DB25	–	6–DB12@0.15	4–DB12@0.15
	14.00	1.00	0.80	14–DB25	3–DB25	14–DB25	3–DB25	7–DB12@0.15	4–DB12@0.15	14–DB25	3–DB25	14–DB25	3–DB25	7–DB12@0.15	4–DB12@0.15
	15.00	1.00	0.80	14–DB25	3–DB25	14–DB25	3–DB25	7–DB12@0.15	4–DB12@0.15	14–DB25	3–DB25	14–DB25	3–DB25	7–DB12@0.15	4–DB12@0.15

1.3 FOUNDATION & PILE

Ln (M.)	W (M.)	PILE SIZING (MM.)	Nc1	Nc2	NO.OF PILE	FOOTING DIMENSION (M.)					BOTTOM REBAR		TOP REBAR	
						FL	FB	FD	f	g	BF1	BF2	TF1	TF2
20.00 M. SEISMIC LEVEL 1	13.00	☒ 400x400	7	2	14	14.00	2.60	1.20	2.03	1.80	DB25@0.14	DB25@0.20	DB25@0.14	DB20@0.25
	14.00	☒ 400x400	8	2	16	15.00	2.60	1.20	1.89	1.80	DB25@0.14	DB25@0.20	DB25@0.14	DB20@0.25
	15.00	☒ 400x400	8	2	16	15.00	2.60	1.20	1.89	1.80	DB25@0.14	DB25@0.20	DB25@0.14	DB20@0.25
20.00 M. SEISMIC LEVEL 2	13.00	☒ 400x400	7	2	14	14.00	2.60	1.20	2.03	1.80	DB25@0.14	DB25@0.20	DB25@0.14	DB20@0.25
	14.00	☒ 400x400	8	2	16	15.00	2.60	1.20	1.89	1.80	DB25@0.14	DB25@0.20	DB25@0.14	DB20@0.25
	15.00	☒ 400x400	8	2	16	15.00	2.60	1.20	1.89	1.80	DB25@0.14	DB25@0.20	DB25@0.14	DB20@0.25

2. 8.00 M. < HEIGHT ≤ 15.00 M.

2.1 DIMENSION OF SUBSTRUCTURE & REBAR OF COLUMN

Ln (M.)	W (M.)	NO.OF I-GIRDER (N_I)	DIMENSION (M.)							C (SIDEWALK WIDTH)		REBAR COLUMN					
			A	B	E	S	S1	S2	S3	SW=1.00 M.	SW=1.50 M.	D (M.)	CR1	CR2	ST3	CR3	ST4
20.00 M. SEISMIC LEVEL 1	13.00	8	15.00	5.30	2.20	1.86	2.40	2.90	1.00	1.00	1.50	1.00	29–DB25	29–DB25	DB12@0.15	29–DB25	DB12@0.30
	14.00	8	16.00	5.70	2.30	2.00	2.60	3.10	1.00	1.00	1.50	1.00	29–DB25	29–DB25	DB12@0.15	29–DB25	DB12@0.30
	15.00	8	16.00	5.70	2.30	2.00	2.60	3.10	1.00	1.00	–	1.00	30–DB25	30–DB25	DB12@0.15	30–DB25	DB12@0.30
20.00 M. SEISMIC LEVEL 2	13.00	8	15.00	5.30	2.20	1.86	2.40	2.90	1.00	1.00	1.50	1.00	34–DB25	34–DB25	DB12@0.15	34–DB25	DB12@0.30
	14.00	8	16.00	5.70	2.30	2.00	2.60	3.10	1.00	1.00	1.50	1.00	34–DB25	34–DB25	DB12@0.15	34–DB25	DB12@0.30
	15.00	8	16.00	5.70	2.30	2.00	2.60	3.10	1.00	1.00	–	1.00	38–DB25	38–DB25	DB12@0.15	38–DB28	DB12@0.30

2.2 REBAR OF CAP BEAM

Ln (M.)	W (M.)	b	h	SKEW 0–30						SKEW 31–45					
				T1	T2	B1	B2	ST1(STIRRUPS)	ST2(STIRRUPS)	T1	T2	B1	B2	ST1(STIRRUPS)	ST2(STIRRUPS)
20.00 M. SEISMIC LEVEL 1	13.00	1.20	1.00	14–DB25	–	14–DB25	–	4–DB12@0.15	4–DB12@0.30	14–DB25	–	14–DB25	–	4–DB12@0.15	4–DB12@0.30
	14.00	1.20	1.00	14–DB25	–	14–DB25	–	5–DB12@0.15	4–DB12@0.30	14–DB25	–	14–DB25	–	5–DB12@0.15	4–DB12@0.30
	15.00	1.20	1.00	14–DB25	–	14–DB25	–	5–DB12@0.15	4–DB12@0.30	14–DB25	–	14–DB25	–	5–DB12@0.15	4–DB12@0.30
20.00 M. SEISMIC LEVEL 2	13.00	1.20	1.00	14–DB25	–	14–DB25	–	4–DB12@0.15	4–DB12@0.30	14–DB25	–	14–DB25	–	4–DB12@0.15	4–DB12@0.30
	14.00	1.20	1.00	14–DB25	–	14–DB25	–	5–DB12@0.15	4–DB12@0.30	14–DB25	–	14–DB25	–	5–DB12@0.15	4–DB12@0.30
	15.00	1.20	1.00	14–DB25	–	14–DB25	–	5–DB12@0.15	4–DB12@0.30	14–DB25	–	14–DB25	–	5–DB12@0.15	4–DB12@0.30

2.3 FOUNDATION & PILE

Ln (M.)	W (M.)	PILE SIZING (MM.)	Nc1	Nc2	NO.OF PILE	FOOTING DIMENSION (M.)					BOTTOM REBAR		TOP REBAR	
						FL	FB	FD	f	g	BF1	BF2	TF1	TF2
20.00 M. SEISMIC LEVEL 1	13.00	☒ 400x400	10	2	20	14.00	2.60	1.20	1.36	1.80	DB25@0.14	DB25@0.20	DB25@0.14	DB20@0.25
	14.00	☒ 400x400	10	2	20	15.00	2.60	1.20	1.47	1.80	DB25@0.13	DB25@0.20	DB25@0.13	DB20@0.25
	15.00	☒ 400x400	10	2	20	15.00	2.60	1.20	1.47	1.80	DB25@0.13	DB25@0.20	DB25@0.13	DB20@0.25
20.00 M. SEISMIC LEVEL 2	13.00	☒ 400x400	10	2	20	14.00	2.60	1.20	1.36	1.80	DB25@0.14	DB25@0.20	DB25@0.14	DB20@0.25
	14.00	☒ 400x400	10	2	20	15.00	2.60	1.20	1.47	1.80	DB25@0.13	DB25@0.20	DB25@0.13	DB20@0.25
	15.00	☒ 400x400	10	2	20	15.00	2.60	1.20	1.47	1.80	DB25@0.13	DB25@0.20	DB25@0.13	DB20@0.25

NOTE :
1. ALL DIMENSIONS SHOWN ARE IN METERS UNLESS OTHERWISE INDICATED
2. LIVE LOADING : VEHICLE LOAD HL-93
3. A MINIMUM ULTIMATE COMPRESSIVE STRENGTH FOR A 150X150X150 MM. CUBE AT 28 DAYS AS FOLLOWS :
   A) FOR COLUMN AND CAP BEAM 35 MPa
   B) FOR FOOTING 35 MPa
4. REBARS SMALLER THAN RB9 MM. SHALL BE TIS 20 GRADE SR 24 PLAIN ROUND BARS, OTHERS SHALL BE TIS 24 GRADE SD40 DEFORMED BARS UNLESS OTHERWISE INDICATED.

REF.	REVISION	SIGNATURE	DATE

KINGDOM OF THAILAND

MINISTRY OF TRANSPORT
DEPARTMENT OF HIGHWAYS

STANDARD DRAWING

THREE COLUMNS PIER WITH SIDEWALK (FOR I-GIRDER)
ROADWAY WIDTH 13.00 – 15.00 M., 20.00 M. SPAN,
HEIGHT ≤ 15.00 M.

DESIGNED : D.O.H. & CONSULTANTS
CHECKED : BUREAU OF LOCATION & DESIGN
DATE : OCT 2015
SUBMITTED : (DIRECTOR OF LOCATION & DESIGN BUREAU)
SCALE : AS SHOWN
APPROVED : (FOR DIRECTOR GENERAL)
DWG NO. PC–217
SHEET NO. 277

D:\std dwg 2015\PC-217(REV00)

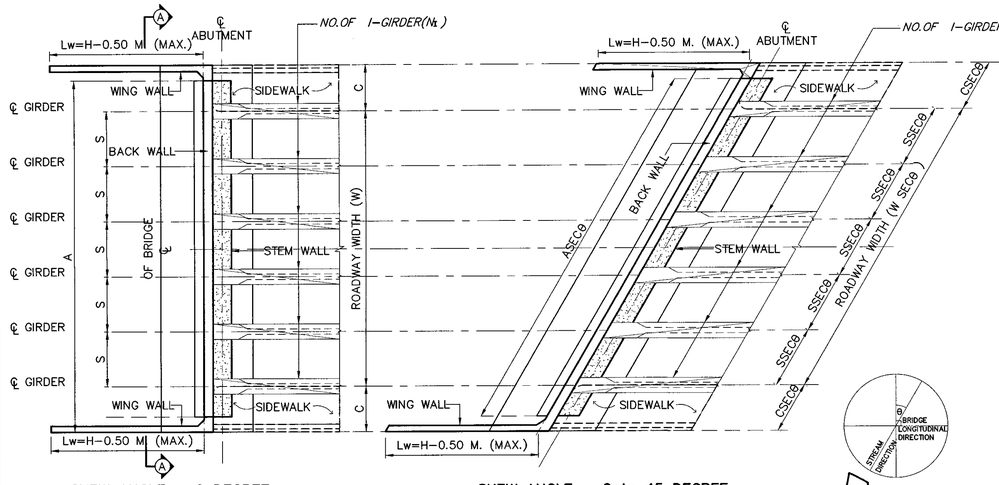

SKEW ANGLE = 0 DEGREE

SKEW ANGLE = 0 to 45 DEGREE

PLAN OF ABUTMENT

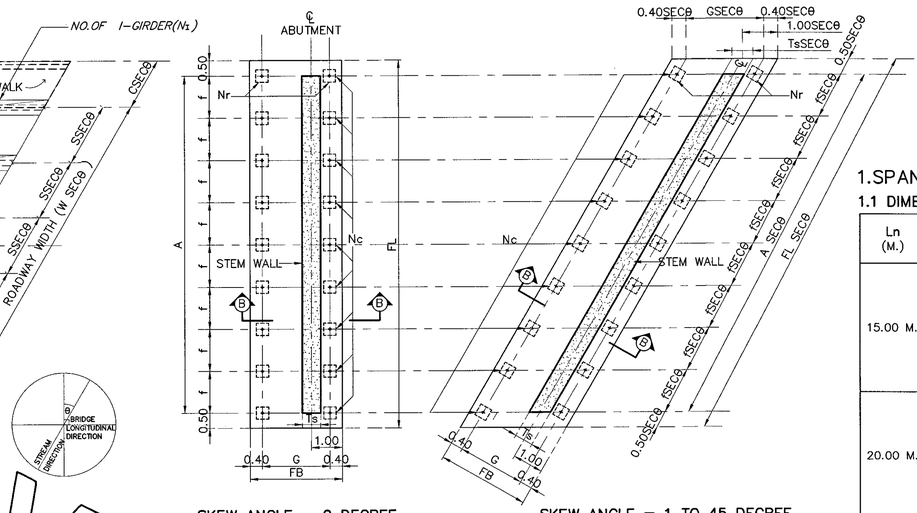

SKEW ANGLE = 0 DEGREE

SKEW ANGLE = 1 TO 45 DEGREE

PLAN OF FOOTING

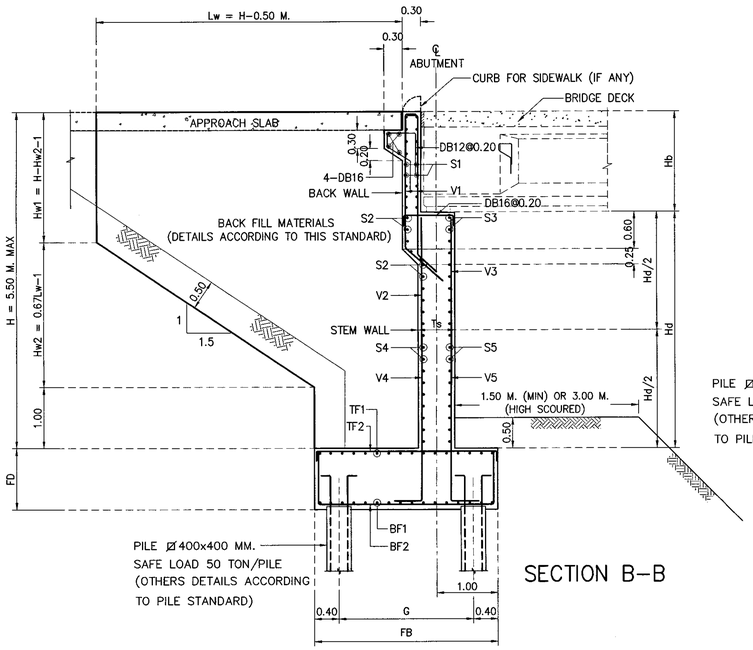

SECTION B-B

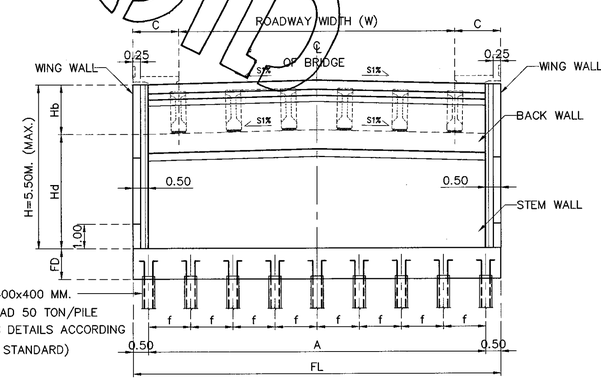

SECTION A-A

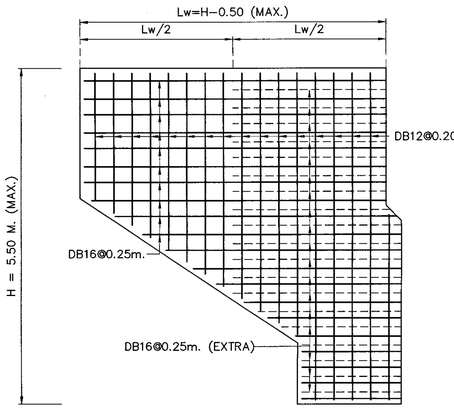

SECTION C-C

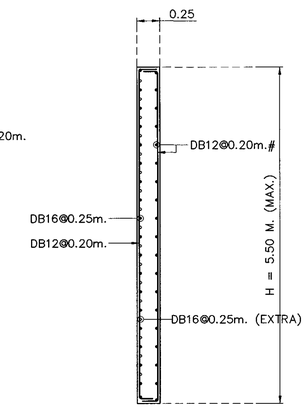

SECTION D-D

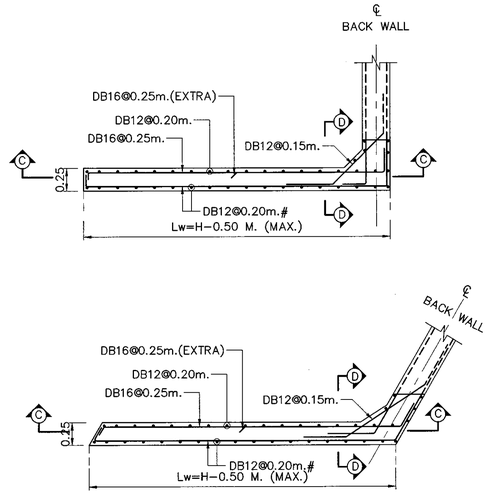

VOID

1.SPAN LENGTH 15.00 M. AND 20.00 M.

1.1 DIMENSION OF ABUTMENT

Ln (M.)	W (M.)	NO.OF I-GIRDER (N_2)	H(M.) (MAX)	DIMENSION (M.)					C (SIDEWALK WIDTH)	
				A	S	Hb	Hd	Ts	SW=1.00 M.	SW=1.50 M.
15.00 M.	9.00	6	5.50	11.00	1.80	1.03 *	4.47	0.60	1.00	1.50
	10.00	6	5.50	12.00	2.00	1.03 *	4.47	0.60	1.00	1.50
	11.00	7	5.50	13.00	1.83	1.03 *	4.47	0.60	1.00	1.50
	12.00	7	5.50	14.00	2.00	1.03 *	4.47	0.60	1.00	1.50
	13.00	8	5.50	15.00	1.86	1.03 *	4.47	0.60	1.00	1.50
	14.00	8	5.50	16.00	2.00	1.03 *	4.47	0.60	1.00	1.50
	15.00	8	5.50	17.00	2.00	1.03 *	4.47	0.60	1.00	–
20.00 M.	9.00	6	5.50	11.00	1.80	1.48 *	4.02	0.60	1.00	1.50
	10.00	6	5.50	12.00	2.00	1.48 *	4.02	0.60	1.00	1.50
	11.00	7	5.50	13.00	1.83	1.48 *	4.02	0.60	1.00	1.50
	12.00	7	5.50	14.00	2.00	1.48 *	4.02	0.60	1.00	1.50
	13.00	8	5.50	15.00	1.86	1.48 *	4.02	0.60	1.00	1.50
	14.00	8	5.50	16.00	2.00	1.48 *	4.02	0.60	1.00	1.50
	15.00	8	5.50	17.00	2.00	1.48 *	4.02	0.60	1.00	–

REMARK ; * = DEPENDS ON DEPTH OF GIRDER

1.2 REBAR IN ABUTMENT

Ln (M.)	W (M.)	SKEW 0-45 DEGREE									
		V1	V2	V3	V4	V5	S1	S2	S3	S4	S5
15.00 M.	9.00-15.00	DB20@0.20	DB20@0.20	DB16@0.20	DB20@0.10	DB16@0.20	DB16@0.20	DB16@0.20	DB16@0.20	DB16@0.20	DB16@0.20
20.00 M.	9.00-15.00	DB20@0.20	DB20@0.20	DB16@0.20	DB20@0.10	DB16@0.20	DB16@0.20	DB16@0.20	DB16@0.20	DB16@0.20	DB16@0.20

1.3 FOUNDATION & PILE

Ln (M.)	W (M.)	PILE SIZING (MM.)	Nc	Nr	NO.OF PILE	FOOTING DIMENSION (M.)					BOTTOM REBAR		TOP REBAR	
						FL	FB	FD	f	G	BF1	BF2	TF1	TF2
15.00 M.	9.00	Ø 400x400	9	2	18	12.00	3.50	1.00	1.40	2.70	DB20@0.15	DB25@0.15	DB20@0.30	DB20@0.30
	10.00	Ø 400x400	9	2	18	13.00	3.50	1.00	1.53	2.70	DB20@0.15	DB25@0.15	DB20@0.30	DB20@0.30
	11.00	Ø 400x400	10	2	20	14.00	3.50	1.00	1.47	2.70	DB20@0.15	DB25@0.15	DB20@0.30	DB20@0.30
	12.00	Ø 400x400	11	2	22	15.00	3.50	1.00	1.42	2.70	DB20@0.15	DB25@0.15	DB20@0.30	DB20@0.30
	13.00	Ø 400x400	11	2	22	16.00	3.50	1.00	1.52	2.70	DB20@0.15	DB25@0.15	DB20@0.30	DB20@0.30
	14.00	Ø 400x400	12	2	24	17.00	3.50	1.00	1.47	2.70	DB20@0.15	DB25@0.15	DB20@0.30	DB20@0.30
	15.00	Ø 400x400	12	2	24	18.00	3.50	1.00	1.56	2.70	DB20@0.15	DB25@0.15	DB20@0.30	DB20@0.30
20.00 M.	9.00	Ø 400x400	10	2	20	12.00	3.50	1.00	1.24	2.70	DB20@0.15	DB25@0.13	DB20@0.30	DB20@0.30
	10.00	Ø 400x400	10	2	20	13.00	3.50	1.00	1.36	2.70	DB20@0.15	DB25@0.13	DB20@0.30	DB20@0.30
	11.00	Ø 400x400	11	2	22	14.00	3.50	1.00	1.32	2.70	DB20@0.15	DB25@0.13	DB20@0.30	DB20@0.30
	12.00	Ø 400x400	12	2	24	15.00	3.50	1.00	1.29	2.70	DB20@0.15	DB25@0.13	DB20@0.30	DB20@0.30
	13.00	Ø 400x400	13	2	26	16.00	3.50	1.00	1.27	2.70	DB20@0.15	DB25@0.13	DB20@0.30	DB20@0.30
	14.00	Ø 400x400	13	2	26	17.00	3.50	1.00	1.35	2.70	DB20@0.15	DB25@0.13	DB20@0.30	DB20@0.30
	15.00	Ø 400x400	14	2	28	18.00	3.50	1.00	1.32	2.70	DB20@0.15	DB25@0.13	DB20@0.30	DB20@0.30

1.4 ADJUST LENGHT FOR SKEW BRIDGE

VALUE OF SEC θ IN CASE OF SKEW BRIDGE (SKEW, θ)										
SKEW ANGLE, θ (DEGREE)	0	5	10	15	20	25	30	35	40	45
SEC θ	1.0000	1.0038	1.0154	1.0353	1.0642	1.1034	1.1547	1.2208	1.3054	1.4142

NOTE :
1. ALL DIMENSIONS SHOWN ARE IN METERS UNLESS OTHERWISE INDICATED
2. LIVE LOADING : VEHICLE LOAD HL-93
3. A MINIMUM ULTIMATE COMPRESSIVE STRENGTH FOR A 150X150X150 MM. CUBE AT 28 DAYS AS FOLLOWS :
   A) FOR ABUTMENT/WINGWALL 35 MPa
   B) FOR FOOTING 35 MPa
4. REBARS SMALLER THAN RB9 MM. SHALL BE TIS 20 GRADE SR 24 PLAIN ROUND BARS, OTHERS SHALL BE TIS 24 GRADE SD40 DEFORMED BARS UNLESS OTHERWISE INDICATED.

REF.	REVISION	SIGNATURE	DATE

KINGDOM OF THAILAND

MINISTRY OF TRANSPORT

DEPARTMENT OF HIGHWAYS

STANDARD DRAWING

ABUTMENT WITH SIDEWALK (FOR I-GIRDER)
ROADWAY WIDTH 9.00 - 15.00 M., 15.00 M.
AND 20.00 M. SPAN, HEIGHT ≤ 5.50 M.

DESIGNED : D.O.H. & CONSULTANTS | CHECKED : BUREAU OF LOCATION & DESIGN | DATE : OCT 2015

SUBMITTED : (DIRECTOR OF LOCATION & DESIGN BUREAU) | SCALE : AS SHOWN

APPROVED : (FOR DIRECTOR GENERAL) | DWG NO. PC-218 | SHEET NO. 278

D:\std dwg 2015\PC-218(REV00)

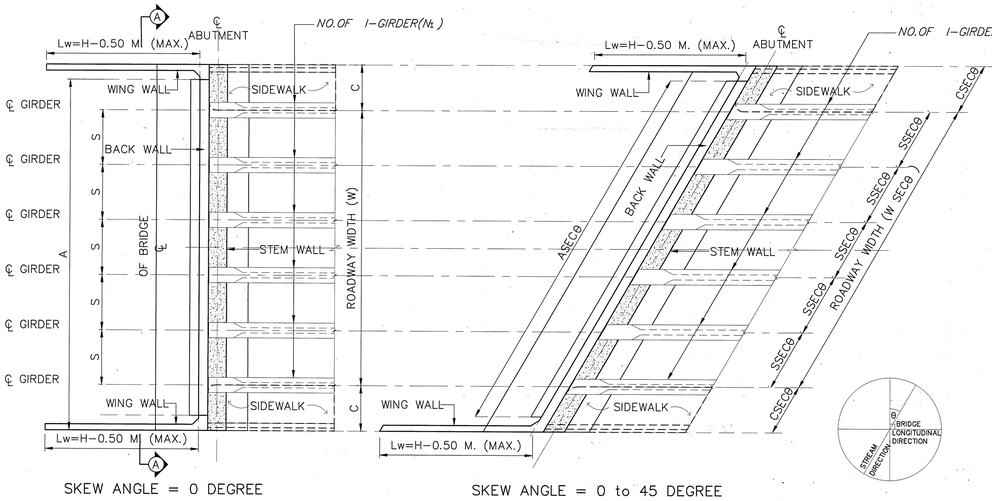

SKEW ANGLE = 0 DEGREE

SKEW ANGLE = 0 to 45 DEGREE

PLAN OF ABUTMENT

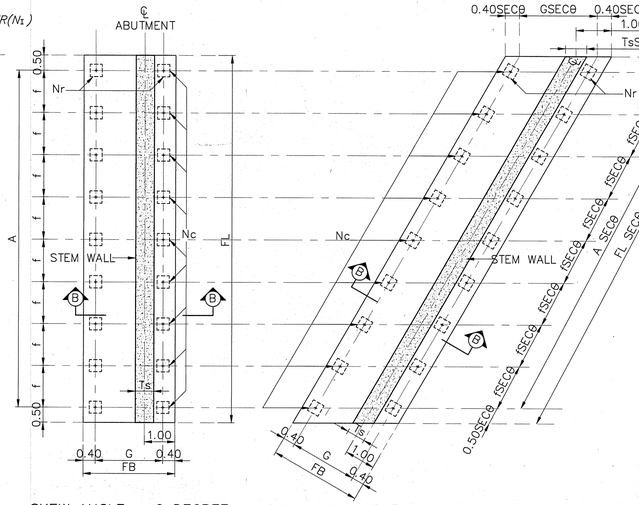

SKEW ANGLE = 0 DEGREE

SKEW ANGLE = 1 TO 45 DEGREE

PLAN OF FOOTING

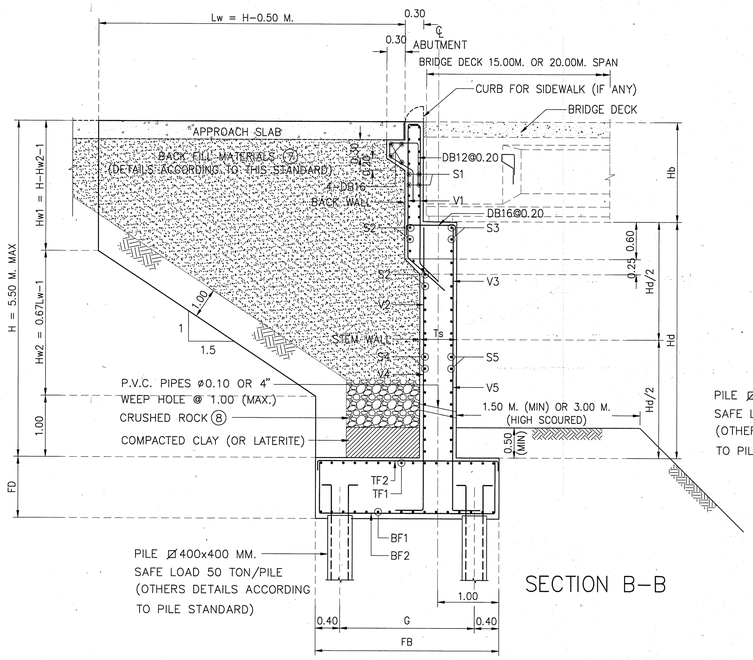

SECTION B–B

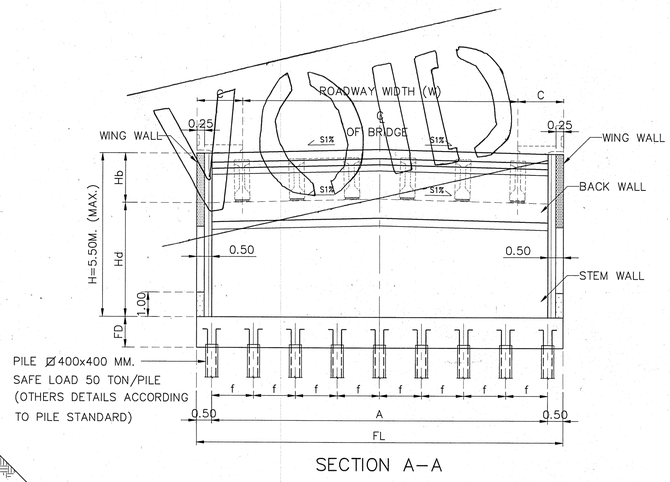

SECTION A–A

1.SPAN LENGTH 15.00 M. AND 20.00 M.

1.1 DIMENSION OF ABUTMENT

Ln (M.)	W (M.)	NO.OF I-GIRDER (N_2)	H(M.) (MAX)	DIMENSION (M.)					C (SIDEWALK WIDTH)	
				A	S	Hb	Hd	Ts	SW=1.00 M.	SW=1.50 M.
15.00 M.	9.00	6	5.50	11.00	1.80	1.03 *	4.47	0.60	1.00	1.50
	10.00	6	5.50	12.00	2.00	1.03 *	4.47	0.60	1.00	1.50
	11.00	7	5.50	13.00	1.83	1.03 *	4.47	0.60	1.00	1.50
	12.00	7	5.50	14.00	2.00	1.03 *	4.47	0.60	1.00	1.50
	13.00	8	5.50	15.00	1.86	1.03 *	4.47	0.60	1.00	1.50
	14.00	8	5.50	16.00	2.00	1.03 *	4.47	0.60	1.00	1.50
	15.00	8	5.50	17.00	2.00	1.03 *	4.47	0.60	1.00	–
20.00 M.	9.00	6	5.50	11.00	1.80	1.48 *	4.02	0.60	1.00	1.50
	10.00	6	5.50	12.00	2.00	1.48 *	4.02	0.60	1.00	1.50
	11.00	7	5.50	13.00	1.83	1.48 *	4.02	0.60	1.00	1.50
	12.00	7	5.50	14.00	2.00	1.48 *	4.02	0.60	1.00	1.50
	13.00	8	5.50	15.00	1.86	1.48 *	4.02	0.60	1.00	1.50
	14.00	8	5.50	16.00	2.00	1.48 *	4.02	0.60	1.00	1.50
	15.00	8	5.50	17.00	2.00	1.48 *	4.02	0.60	1.00	–

REMARK ; * = DEPENDS ON DEPTH OF GIRDER

1.2 REBAR IN ABUTMENT

Ln (M.)	W (M.)	SKEW 0–45 DEGREE									
		V1	V2	V3	V4	V5	S1	S2	S3	S4	S5
15.00 M.	9.00–15.00	DB20@0.20	DB20@0.20	DB16@0.20	DB20@0.10	DB16@0.20	DB16@0.20	DB16@0.20	DB16@0.20	DB16@0.20	DB16@0.20
20.00 M.	9.00–15.00	DB20@0.20	DB20@0.20	DB16@0.20	DB20@0.10	DB16@0.20	DB16@0.20	DB16@0.20	DB16@0.20	DB16@0.20	DB16@0.20

1.3 FOUNDATION & PILE

Ln (M.)	W (M.)	PILE SIZING (MM.)	Nc	Nr	NO.OF PILE	FOOTING DIMENSION (M.)					BOTTOM REBAR		TOP REBAR	
						FL	FB	FD	f	G	BF1	BF2	TF1	TF2
15.00 M.	9.00	⌀ 400x400	9	2	18	12.00	3.50	1.00	1.40	2.70	DB20@0.15	DB25@0.15	DB20@0.30	DB20@0.30
	10.00	⌀ 400x400	9	2	18	13.00	3.50	1.00	1.53	2.70	DB20@0.15	DB25@0.15	DB20@0.30	DB20@0.30
	11.00	⌀ 400x400	10	2	20	14.00	3.50	1.00	1.47	2.70	DB20@0.15	DB25@0.15	DB20@0.30	DB20@0.30
	12.00	⌀ 400x400	11	2	22	15.00	3.50	1.00	1.42	2.70	DB20@0.15	DB25@0.15	DB20@0.30	DB20@0.30
	13.00	⌀ 400x400	11	2	22	16.00	3.50	1.00	1.52	2.70	DB20@0.15	DB25@0.15	DB20@0.30	DB20@0.30
	14.00	⌀ 400x400	12	2	24	17.00	3.50	1.00	1.47	2.70	DB20@0.15	DB25@0.15	DB20@0.30	DB20@0.30
	15.00	⌀ 400x400	12	2	24	18.00	3.50	1.00	1.56	2.70	DB20@0.15	DB25@0.15	DB20@0.30	DB20@0.30
20.00 M.	9.00	⌀ 400x400	10	2	20	12.00	3.50	1.00	1.24	2.70	DB20@0.15	DB25@0.13	DB20@0.30	DB20@0.30
	10.00	⌀ 400x400	10	2	20	13.00	3.50	1.00	1.36	2.70	DB20@0.15	DB25@0.13	DB20@0.30	DB20@0.30
	11.00	⌀ 400x400	11	2	22	14.00	3.50	1.00	1.32	2.70	DB20@0.15	DB25@0.13	DB20@0.30	DB20@0.30
	12.00	⌀ 400x400	12	2	24	15.00	3.50	1.00	1.29	2.70	DB20@0.15	DB25@0.13	DB20@0.30	DB20@0.30
	13.00	⌀ 400x400	13	2	26	16.00	3.50	1.00	1.27	2.70	DB20@0.15	DB25@0.13	DB20@0.30	DB20@0.30
	14.00	⌀ 400x400	13	2	26	17.00	3.50	1.00	1.35	2.70	DB20@0.15	DB25@0.13	DB20@0.30	DB20@0.30
	15.00	⌀ 400x400	14	2	28	18.00	3.50	1.00	1.32	2.70	DB20@0.15	DB25@0.13	DB20@0.30	DB20@0.30

1.4 ADJUST LENGHT FOR SKEW BRIDGE

VALUE OF SEC θ IN CASE OF SKEW BRIDGE (SKEW, θ)										
SKEW ANGLE, θ (DEGREE)	0	5	10	15	20	25	30	35	40	45
SEC θ	1.0000	1.0038	1.0154	1.0353	1.0642	1.1034	1.1547	1.2208	1.3054	1.4142

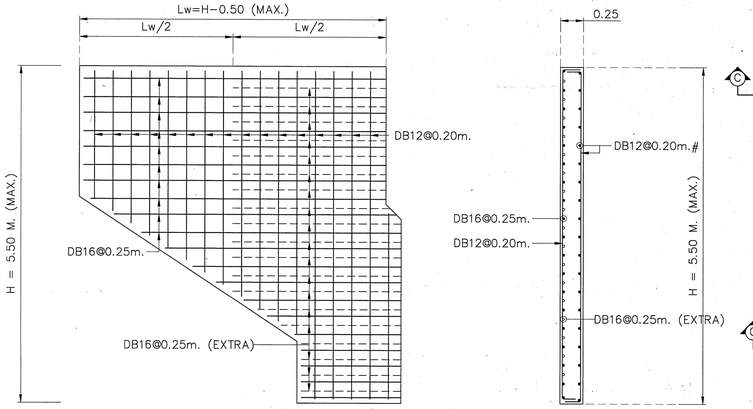

SECTION C–C

SECTION D–D

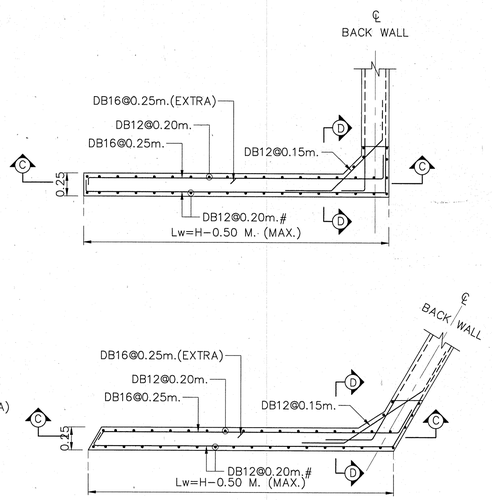

NOTES :

1. ALL DIMENSIONS SHOWN ARE IN METERS UNLESS OTHERWISE INDICATED.
2. DESIGN LIVE LOAD : HL-93
3. A MINIMUM ULTIMATE COMPRESSIVE STRENGTH FOR A 150x150x150 MM. CUBE AT 28 DAYS AS FOLLOWS:
   - A) FOR ABUTMENT AND WINGWALL 35 MPa. (357 KG/CM^2)
   - B) FOR FOOTING 35 MPa. (357 KG/CM^2)
   - C) FOR SIDEWALK AND BARRIER 35 MPa. (357 KG/CM^2)
4. REBAR SIZES SMALLER THAN 12 MM. SHALL BE TIS 20 GRADE SR 24 PLAIN ROUND BARS, OTHERS SHALL BE TIS 24 GRADE SD 40 DEFORMED BARS UNLESS OTHERWISE INDICATED.
5. R = 0.50 M. FOR THE BRIDGE WITHOUT SIDEWALK (P = 0.00). FOR THE BRIDGE WITH SIDEWALK OF P = 0.50 AND 1.00, R = 0.50 M. AND 1.00 M., RESPECTIVELY.
6. EACH SPREAD FOOTING SHALL BE LOCATED BELOW TO A DEPTH WHERE SCOUR WILL NOT AFFECT CAPACITY, THE MINIMUM ALLOWABLE BEARING CAPACITY OF 0.30 MPa (30 TON/M^2)
7. POROUS BACKFILL AND CRUSHED ROCK MATERIALS SHALL BE SUBMITTED FOR APPROVAL
8. 1" CRUSHED ROCK OR 1" GRAVEL FILL ALONG THE WALL.

REV.	REVISION	SIGNATURE	DATE
REV.1	REVISION 1/2018		JAN 2018

KINGDOM OF THAILAND
MINISTRY OF TRANSPORT
DEPARTMENT OF HIGHWAYS

STANDARD DRAWING
ABUTMENT WITH SIDEWALK (FOR I-GIRDER)
ROADWAY WIDTH 9.00 – 15.00 M., 15.00 M.
AND 20.00 M. SPAN, HEIGHT ≤ 5.50 M.

DESIGNED : D.O.H. & CONSULTANTS	**CHECKED :** BUREAU OF LOCATION & DESIGN		**DATE :** MAR 2018
SUBMITTED : (DIRECTOR OF LOCATION & DESIGN BUREAU)			**SCALE :** AS SHOWN
APPROVED : (FOR DIRECTOR GENERAL)			**DWG NO.** PC-218
			SHEET NO. 278/R1

D:\20141103_Team Group\12 2558\10P2045_STANDARD DRAWING DOH\Standard Drawing DOH_61.02.19\แก้ไขครั้งที่ 1(ผ่าน)_Revision 1.2017-JAN2018\ENG\STANDARD FINAL-1-CAD(ENG)\STRUCTURAL WORK\Structural Work-Sec. 1 Bridge Span Not More Than 20.00 M\PC-218(REV01)

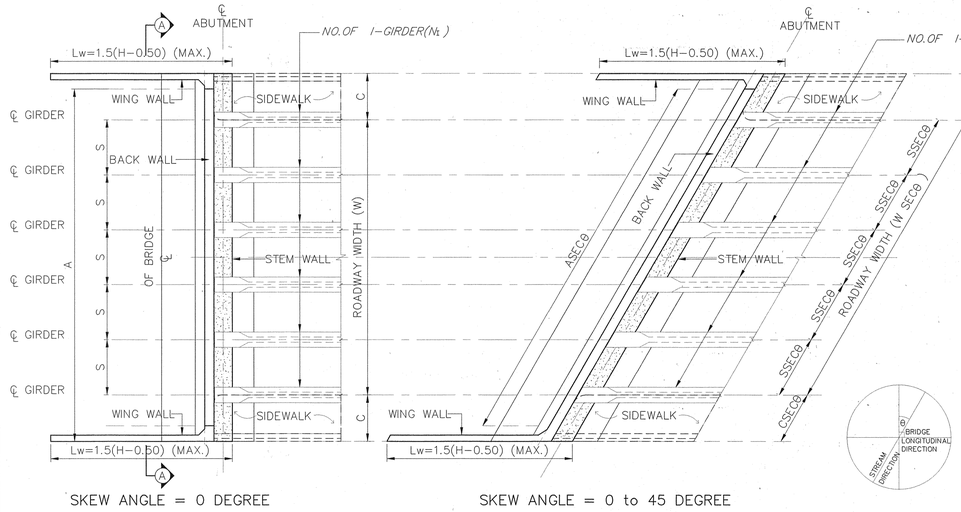

SKEW ANGLE = 0 DEGREE

SKEW ANGLE = 0 to 45 DEGREE

PLAN OF ABUTMENT

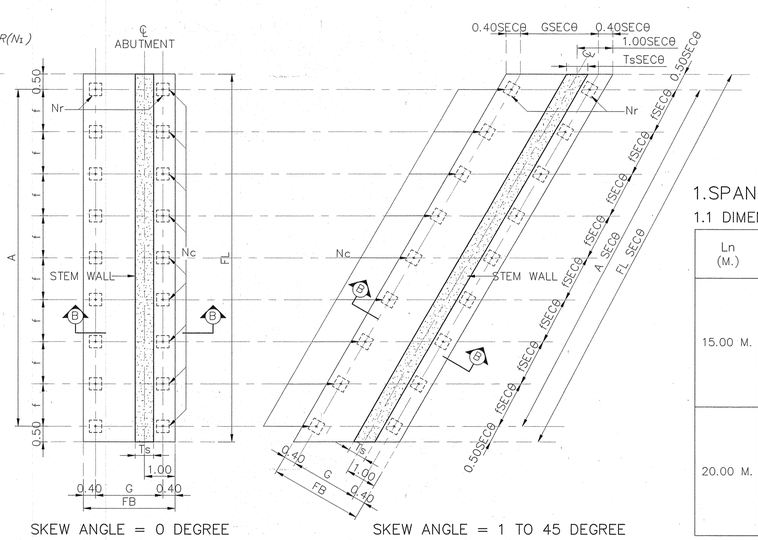

SKEW ANGLE = 0 DEGREE

SKEW ANGLE = 1 TO 45 DEGREE

PLAN OF FOOTING

1.SPAN LENGTH 15.00 M. AND 20.00 M.

1.1 DIMENSION OF ABUTMENT

Ln (M.)	W (M.)	NO.OF I-GIRDER (N_I)	H(M.) (MAX)	DIMENSION (M.)					C (SIDEWALK WIDTH)	
				A	S	Hb	Hd	Ts	SW=1.00 M.	SW=1.50 M.
15.00 M.	9.00	6	5.50	11.00	1.80	1.03 *	4.47	0.60	1.00	1.50
	10.00	6	5.50	12.00	2.00	1.03 *	4.47	0.60	1.00	1.50
	11.00	7	5.50	13.00	1.83	1.03 *	4.47	0.60	1.00	1.50
	12.00	7	5.50	14.00	2.00	1.03 *	4.47	0.60	1.00	1.50
	13.00	8	5.50	15.00	1.86	1.03 *	4.47	0.60	1.00	1.50
	14.00	8	5.50	16.00	2.00	1.03 *	4.47	0.60	1.00	1.50
	15.00	8	5.50	17.00	2.00	1.03 *	4.47	0.60	1.00	–
20.00 M.	9.00	6	5.50	11.00	1.80	1.48 *	4.02	0.60	1.00	1.50
	10.00	6	5.50	12.00	2.00	1.48 *	4.02	0.60	1.00	1.50
	11.00	7	5.50	13.00	1.83	1.48 *	4.02	0.60	1.00	1.50
	12.00	7	5.50	14.00	2.00	1.48 *	4.02	0.60	1.00	1.50
	13.00	8	5.50	15.00	1.86	1.48 *	4.02	0.60	1.00	1.50
	14.00	8	5.50	16.00	2.00	1.48 *	4.02	0.60	1.00	1.50
	15.00	8	5.50	17.00	2.00	1.48 *	4.02	0.60	1.00	–

REMARK ; * = DEPENDS ON DEPTH OF GIRDER

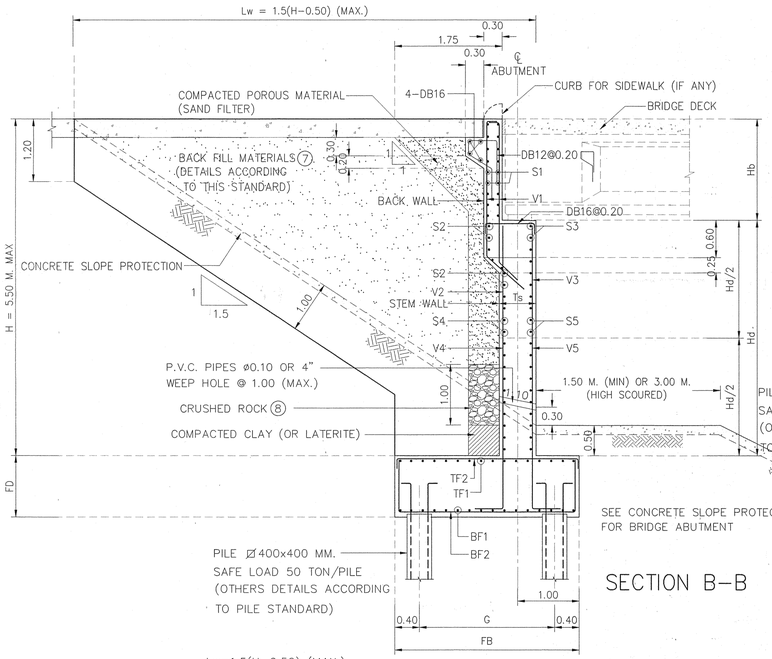

SECTION B-B

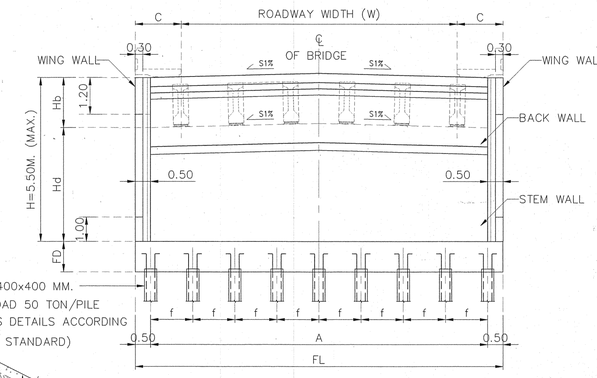

SECTION A-A

1.2 REBAR IN ABUTMENT

Ln (M.)	W (M.)	SKEW 0-45 DEGREE									
		V1	V2	V3	V4	V5	S1	S2	S3	S4	S5
15.00 M.	9.00-15.00	DB20@0.20	DB20@0.20	DB16@0.20	DB20@0.10	DB16@0.20	DB16@0.20	DB16@0.20	DB16@0.20	DB16@0.20	DB16@0.20
20.00 M.	9.00-15.00	DB20@0.20	DB20@0.20	DB16@0.20	DB20@0.10	DB16@0.20	DB16@0.20	DB16@0.20	DB16@0.20	DB16@0.20	DB16@0.20

1.3 FOUNDATION & PILE

Ln (M.)	W (M.)	PILE SIZING (MM.)	Nc	Nr	NO.OF PILE	FOOTING DIMENSION (M.)					BOTTOM REBAR		TOP REBAR	
						FL	FB	FD	f	G	BF1	BF2	TF1	TF2
15.00 M.	9.00	⍁ 400x400	9	2	18	12.00	3.50	1.00	1.40	2.70	DB20@0.15	DB25@0.15	DB20@0.30	DB20@0.30
	10.00	⍁ 400x400	9	2	18	13.00	3.50	1.00	1.53	2.70	DB20@0.15	DB25@0.15	DB20@0.30	DB20@0.30
	11.00	⍁ 400x400	10	2	20	14.00	3.50	1.00	1.47	2.70	DB20@0.15	DB25@0.15	DB20@0.30	DB20@0.30
	12.00	⍁ 400x400	11	2	22	15.00	3.50	1.00	1.42	2.70	DB20@0.15	DB25@0.15	DB20@0.30	DB20@0.30
	13.00	⍁ 400x400	11	2	22	16.00	3.50	1.00	1.52	2.70	DB20@0.15	DB25@0.15	DB20@0.30	DB20@0.30
	14.00	⍁ 400x400	12	2	24	17.00	3.50	1.00	1.47	2.70	DB20@0.15	DB25@0.15	DB20@0.30	DB20@0.30
	15.00	⍁ 400x400	12	2	24	18.00	3.50	1.00	1.56	2.70	DB20@0.15	DB25@0.15	DB20@0.30	DB20@0.30
20.00 M.	9.00	⍁ 400x400	10	2	20	12.00	3.50	1.00	1.24	2.70	DB20@0.15	DB25@0.13	DB20@0.30	DB20@0.30
	10.00	⍁ 400x400	10	2	20	13.00	3.50	1.00	1.36	2.70	DB20@0.15	DB25@0.13	DB20@0.30	DB20@0.30
	11.00	⍁ 400x400	11	2	22	14.00	3.50	1.00	1.32	2.70	DB20@0.15	DB25@0.13	DB20@0.30	DB20@0.30
	12.00	⍁ 400x400	12	2	24	15.00	3.50	1.00	1.29	2.70	DB20@0.15	DB25@0.13	DB20@0.30	DB20@0.30
	13.00	⍁ 400x400	13	2	26	16.00	3.50	1.00	1.27	2.70	DB20@0.15	DB25@0.13	DB20@0.30	DB20@0.30
	14.00	⍁ 400x400	13	2	26	17.00	3.50	1.00	1.35	2.70	DB20@0.15	DB25@0.13	DB20@0.30	DB20@0.30
	15.00	⍁ 400x400	14	2	28	18.00	3.50	1.00	1.32	2.70	DB20@0.15	DB25@0.13	DB20@0.30	DB20@0.30

1.4 ADJUST LENGHT FOR SKEW BRIDGE

VALUE OF SEC θ IN CASE OF SKEW BRIDGE (SKEW, θ)										
SKEW ANGLE, θ (DEGREE)	0	5	10	15	20	25	30	35	40	45
SEC θ	1.0000	1.0038	1.0154	1.0353	1.0642	1.1034	1.1547	1.2208	1.3054	1.4142

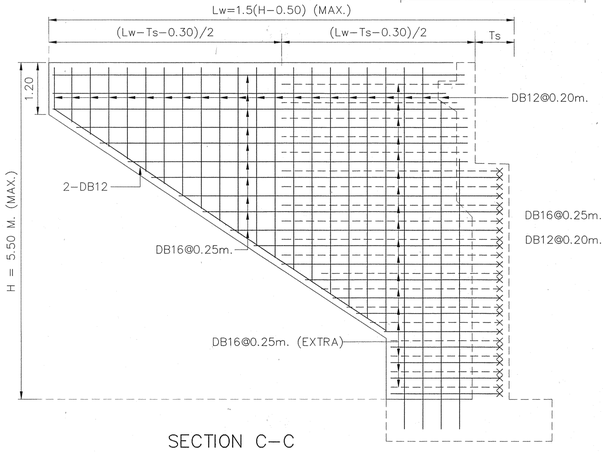

SECTION C-C

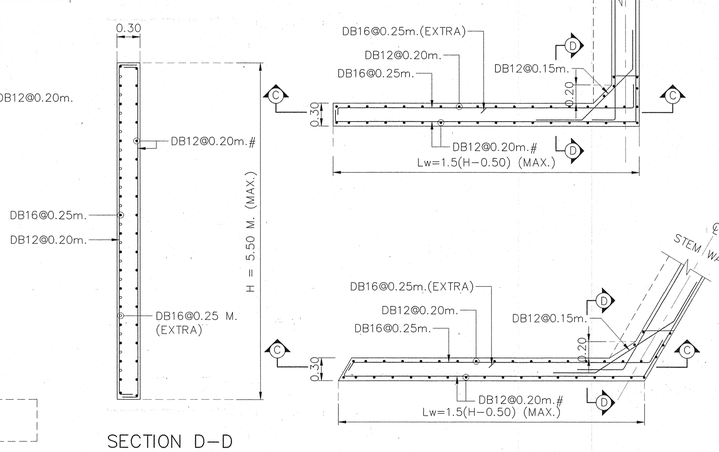

SECTION D-D

NOTES :

1. ALL DIMENSIONS SHOWN ARE IN METERS UNLESS OTHERWISE INDICATED.
2. DESIGN LIVE LOAD : HL-93
3. A MINIMUM ULTIMATE COMPRESSIVE STRENGTH FOR A 150x150x150 MM. CUBE AT 28 DAYS AS FOLLOWS:
   A) FOR ABUTMENT AND WINGWALL 35 MPa. (357 KG/CM^2)
   B) FOR FOOTING 35 MPa. (357 KG/CM^2)
   C) FOR SIDEWALK AND BARRIER 35 MPa. (357 KG/CM^2)
4. REBAR SIZES SMALLER THAN 12 MM. SHALL BE TIS 20 GRADE SR 24 PLAIN ROUND BARS, OTHERS SHALL BE TIS 24 GRADE SD 40 DEFORMED BARS UNLESS OTHERWISE INDICATED.
5. R = 0.50 M. FOR THE BRIDGE WITHOUT SIDEWALK (P = 0.00). FOR THE BRIDGE WITH SIDEWALK OF P = 0.50 AND 1.00, R = 0.50 M. AND 1.00 M., RESPECTIVELY.
6. EACH SPREAD FOOTING SHALL BE LOCATED BELOW TO A DEPTH WHERE SCOUR WILL NOT AFFECT CAPACITY, THE MINIMUM ALLOWABLE BEARING CAPACITY OF 0.30 MPa (30 TON/M^2)
7. POROUS BACKFILL AND CRUSHED ROCK MATERIALS SHALL BE SUBMITTED FOR APPROVAL
8. 1" CRUSHED ROCK OR 1" GRAVEL FILL ALONG THE WALL.

REV.	REVISION	SIGNATURE	DATE
REV.2	REVISION 2/2021		JAN 2021
REV.1	REVISION 1/2018		JAN 2018

KINGDOM OF THAILAND
MINISTRY OF TRANSPORT
DEPARTMENT OF HIGHWAYS

STANDARD DRAWING

ABUTMENT WITH SIDEWALK (FOR I-GIRDER)
ROADWAY WIDTH 9.00 – 15.00 M., 15.00 M.
AND 20.00 M. SPAN, HEIGHT ≤ 5.50 M.

DESIGNED : D.O.H. & CONSULTANTS **CHECKED :** BUREAU OF LOCATION & DESIGN **DATE :** OCT 2015

SUBMITTED : (DIRECTOR OF LOCATION & DESIGN BUREAU) **SCALE :** AS SHOWN

APPROVED : (FOR DIRECTOR GENERAL) **DWG NO.** PC-218

SHEET NO. 278/R2

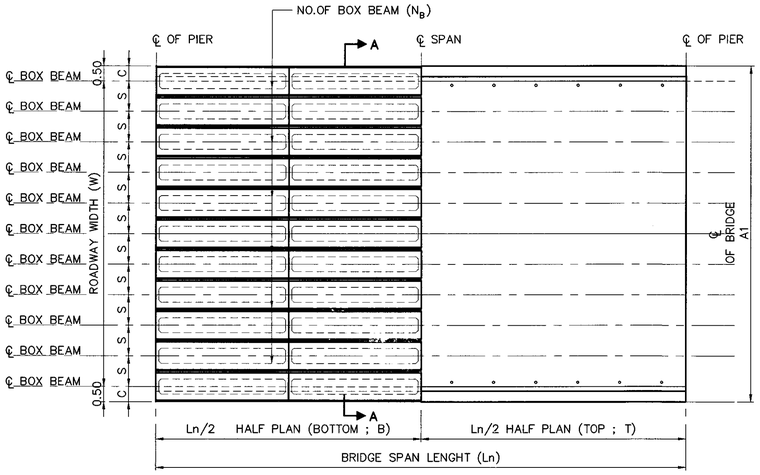

PLAN OF BRIDGE DECK

NOTE :
1. ALL DIMENSIONS SHOWN ARE IN METERS UNLESS OTHERWISE INDICATED
2. LIVE LOADING : VEHICLE LOAD HL-93
3. A MINIMUM ULTIMATE COMPRESSIVE STRENGTH FOR A 150X150X150 MM. CUBE AT 28 DAYS AS FOLLOWS :
   A) FOR COLUMN AND CAP BEAM 35 MPa
   B) FOR FOOTING 35 MPa
4. REBARS SMALLER THAN RB9 MM. SHALL BE TIS 20 GRADE SR 24 PLAIN ROUND BARS, OTHERS SHALL BE TIS 24 GRADE SD50 DEFORMED BARS UNLESS OTHERWISE INDICATED.

1.SPAN LENGTH 15.00 M., 8.00 M. < HEIGHT ≤ 15.00 M.

Ln (M.)	W (M.)	NO.OF BOXBEAM (N_B)	DIMENSION (M.)								C		REBAR COLUMN					
			A1	A2	A3	b	e	S	h1	h2	STRAIGHT	CURVED	Dx1.5D(M.)	CR1	CR2	ST3	CR3	ST4
15.00 M. SEISMIC LEVEL 1	9.00	10	10.00	1.30	1.60	1.60	1.40	2.00	1.00	1.50	1.00	1.00-1.25	1.20x1.80	66-DB28	–	DB12@0.15	38-DB28	DB12@0.30
	10.00	11	11.00	1.40	1.80	1.60	1.45	1.80	1.00	1.50	1.00	1.00-1.25	1.30x1.95	66-DB28	–	DB12@0.15	38-DB28	DB12@0.30
	11.00	12	12.00	1.50	2.00	1.60	1.45	2.00	1.00	1.50	1.00	1.00-1.25	1.30x1.95	66-DB28	–	DB12@0.15	38-DB28	DB12@0.30
	12.00	13	13.00	1.60	2.20	1.60	1.45	1.83	1.00	1.50	1.00	1.00-1.25	1.30x1.95	72-DB28	–	DB12@0.15	38-DB28	DB12@0.30
	13.00	14	14.00	1.70	2.30	1.80	1.60	2.00	1.00	1.70	1.00	1.00-1.25	1.40x2.10	66-DB28	–	DB12@0.15	44-DB28	DB12@0.30
	14.00	15	15.00	1.80	2.50	1.80	1.60	1.86	1.00	1.70	1.00	1.00-1.25	1.40x2.10	66-DB28	–	DB12@0.15	44-DB28	DB12@0.30
	15.00	16	16.00	2.00	2.70	1.80	1.60	2.00	1.00	1.70	1.00	1.00-1.25	1.40x2.10	66-DB28	–	DB12@0.15	44-DB28	DB12@0.30
15.00 M. SEISMIC LEVEL 2	9.00	10	10.00	1.30	1.60	1.60	1.40	2.00	1.00	1.50	1.00	1.00-1.25	1.20x1.80	38-DB28	38-DB28	DB12@0.15	38-DB28	DB12@0.30
	10.00	11	11.00	1.40	1.80	1.60	1.45	1.80	1.00	1.50	1.00	1.00-1.25	1.30x1.95	72-DB28	–	DB12@0.15	38-DB28	DB12@0.30
	11.00	12	12.00	1.50	2.00	1.60	1.45	2.00	1.00	1.50	1.00	1.00-1.25	1.30x1.95	39-DB28	39-DB28	DB12@0.15	39-DB28	DB12@0.30
	12.00	13	13.00	1.60	2.20	1.60	1.45	1.83	1.00	1.50	1.00	1.00-1.25	1.30x1.95	46-DB28	46-DB28	DB12@0.15	38-DB28	DB12@0.30
	13.00	14	14.00	1.70	2.30	1.80	1.60	2.00	1.00	1.70	1.00	1.00-1.25	1.40x2.10	47-DB28	47-DB28	DB12@0.15	47-DB28	DB12@0.30
	14.00	15	15.00	1.80	2.50	1.80	1.60	1.86	1.00	1.70	1.00	1.00-1.25	1.40x2.10	48-DB28	48-DB28	DB12@0.15	48-DB28	DB12@0.30
	15.00	16	16.00	2.00	2.70	1.80	1.60	2.00	1.00	1.70	1.00	1.00-1.25	1.40x2.10	51-DB28	51-DB28	DB12@0.15	51-DB28	DB12@0.30

Ln (M.)	W (M.)	REBAR CAP BEAM						PILE SIZING, PS (MM.)	Nc1	Nc2	NO.OF PILE	FOOTING SKEW 0°-15°					FOOTING SKEW 16°-45°				
		T1	T2	T3	B1	ST1(STIRRUPS)	ST2(STIRRUPS)					FL	FB	FD	f	g	FL	FB	FD	f	g
15.00 M. SEISMIC LEVEL 1	9.00	16-DB25	16-DB25	–	10-DB20	3-DB12@0.20	4-DB12@0.15	⌀ 650x650	6	2	12	10.50	3.25	1.75	1.82	1.95	10.50	3.75	1.75	1.82	2.45
	10.00	15-DB28	15-DB28	–	10-DB20	3-DB12@0.20	4-DB12@0.15	⌀ 650x650	6	2	12	11.00	3.25	1.85	1.92	1.95	11.00	3.75	1.85	1.92	2.45
	11.00	18-DB28	18-DB28	–	10-DB20	3-DB12@0.20	4-DB12@0.15	⌀ 650x650	6	2	12	12.00	3.25	2.00	2.12	1.95	12.00	3.75	2.00	2.12	2.45
	12.00	14-DB28	14-DB28	14-DB28	10-DB20	3-DB12@0.20	4-DB12@0.15	⌀ 650x650	7	2	14	13.00	3.25	2.00	1.93	1.95	13.00	3.75	2.00	1.93	2.45
	13.00	15-DB28	15-DB28	15-DB28	10-DB20	3-DB12@0.20	4-DB12@0.15	⌀ 650x650	7	2	14	14.00	3.25	2.20	2.10	1.95	14.00	3.75	2.20	2.10	2.45
	14.00	16-DB28	16-DB28	16-DB28	12-DB20	3-DB12@0.20	4-DB12@0.15	⌀ 650x650	7	2	14	15.00	3.25	2.30	2.27	1.95	15.00	3.75	2.30	2.27	2.45
	15.00	18-DB28	18-DB28	18-DB28	12-DB20	3-DB12@0.20	4-DB12@0.125	⌀ 650x650	8	2	16	16.00	3.25	2.30	2.09	1.95	16.00	3.75	2.30	2.09	2.45
15.00 M. SEISMIC LEVEL 2	9.00	16-DB25	16-DB25	–	10-DB20	3-DB12@0.20	4-DB12@0.15	⌀ 650x650	6	2	12	10.50	3.25	1.75	1.82	1.95	10.50	3.75	1.75	1.82	2.45
	10.00	15-DB28	15-DB28	–	10-DB20	3-DB12@0.20	4-DB12@0.15	⌀ 650x650	6	2	12	11.00	3.25	1.85	1.92	1.95	11.00	3.75	1.85	1.92	2.45
	11.00	18-DB28	18-DB28	–	10-DB20	3-DB12@0.20	4-DB12@0.15	⌀ 650x650	6	2	12	12.00	3.25	2.00	2.12	1.95	12.00	3.75	2.00	2.12	2.45
	12.00	14-DB28	14-DB28	14-DB28	10-DB20	3-DB12@0.20	4-DB12@0.15	⌀ 650x650	7	2	14	13.00	3.25	2.00	1.93	1.95	13.00	3.75	2.00	1.93	2.45
	13.00	15-DB28	15-DB28	15-DB28	10-DB20	3-DB12@0.20	4-DB12@0.15	⌀ 650x650	7	2	14	14.00	3.25	2.20	2.10	1.95	14.00	3.75	2.20	2.10	2.45
	14.00	16-DB28	16-DB28	16-DB28	12-DB20	3-DB12@0.20	4-DB12@0.15	⌀ 650x650	7	2	14	15.00	3.25	2.30	2.27	1.95	15.00	3.75	2.30	2.27	2.45
	15.00	18-DB28	18-DB28	18-DB28	12-DB20	3-DB12@0.20	4-DB12@0.125	⌀ 650x650	8	2	16	16.00	3.25	2.30	2.09	1.95	16.00	3.75	2.30	2.09	2.45

REMARK ; ** = 2 LAYERS

Ln (M.)	W (M.)	BOTTOM REBAR		TOP REBAR	
		BF1	BF2	TF1	TF2
15.00 M. SEISMIC LEVEL 1	9.00	DB28@0.12 **	DB25@0.15	DB20@0.18	DB20@0.18
	10.00	DB28@0.11 **	DB25@0.14	DB20@0.18	DB20@0.18
	11.00	DB28@0.10 **	DB25@0.14	DB20@0.18	DB20@0.18
	12.00	DB28@0.08 **	DB25@0.13	DB20@0.16	DB20@0.17
	13.00	DB28@0.07 **	DB25@0.13	DB20@0.16	DB20@0.17
	14.00	DB28@0.07 **	DB25@0.13	DB20@0.16	DB20@0.17
	15.00	DB28@0.07 **	DB25@0.12	DB20@0.16	DB20@0.17
15.00 M. SEISMIC LEVEL 2	9.00	DB28@0.12 **	DB25@0.15	DB20@0.18	DB20@0.18
	10.00	DB28@0.11 **	DB25@0.14	DB20@0.18	DB20@0.18
	11.00	DB28@0.10 **	DB25@0.14	DB20@0.18	DB20@0.18
	12.00	DB28@0.08 **	DB25@0.13	DB20@0.16	DB20@0.17
	13.00	DB28@0.07 **	DB25@0.13	DB20@0.16	DB20@0.17
	14.00	DB32@0.08 **	DB25@0.13	DB20@0.16	DB20@0.17
	15.00	DB32@0.08 **	DB25@0.12	DB20@0.14	DB20@0.15

ADJUST LENGHT FOR SKEW BRIDGE

VALUE OF SEC θ IN CASE OF SKEW BRIDGE (SKEW, θ)					
SKEW ANGLE, θ (DEGREE)	0	5	10	15	20
SEC θ	1.0000	1.0038	1.0154	1.0353	1.0642
SKEW ANGLE, θ (DEGREE)	25	30	35	40	45
SEC θ	1.1034	1.1547	1.2208	1.3054	1.4142

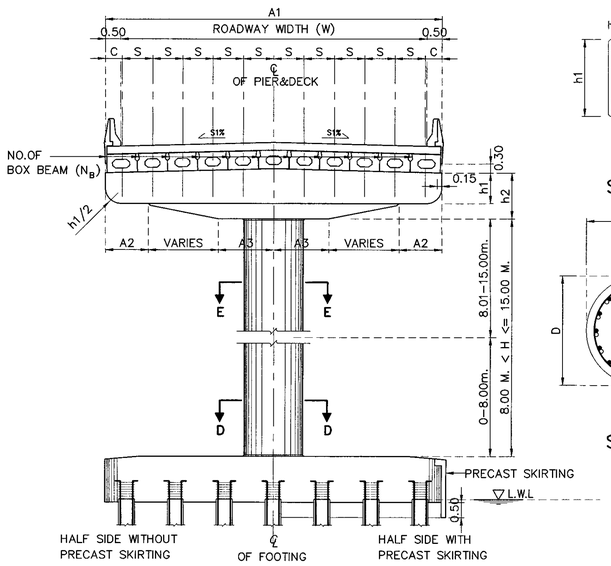

SECTION A-A

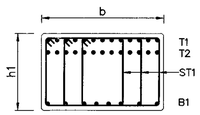

SECTION B-B

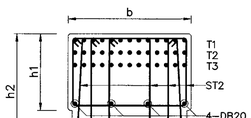

SECTION C-C

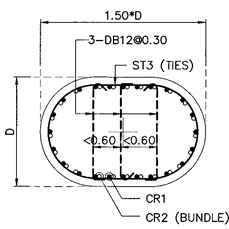

SECTION D-D

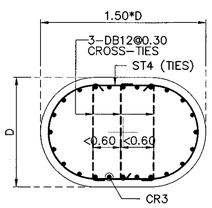

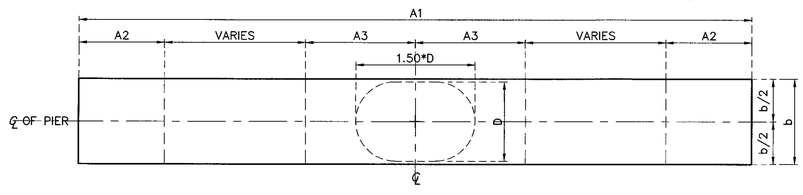

PLAN OF CAP

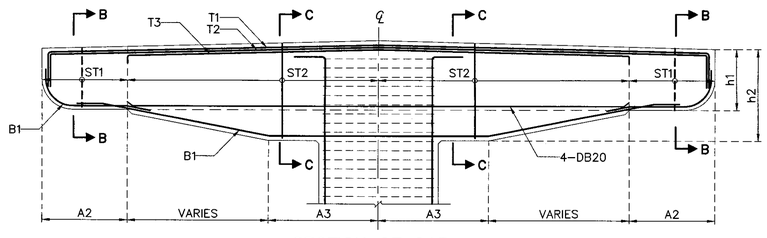

SECTION OF CAP

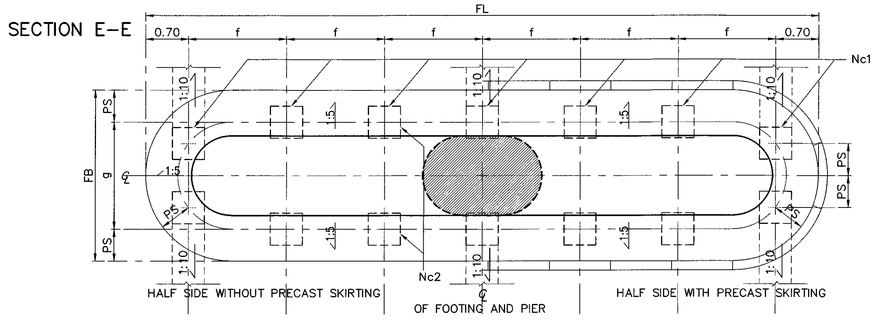

SECTION E-E

PLAN OF FOOTING

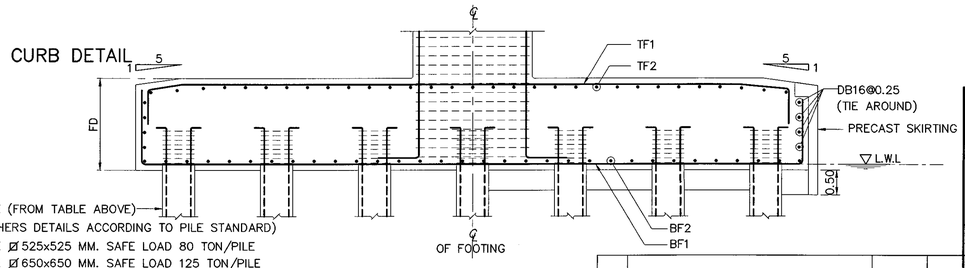

SECTION OF FOOTING

REF.	REVISION	SIGNATURE	DATE

KINGDOM OF THAILAND

MINISTRY OF TRANSPORT

DEPARTMENT OF HIGHWAYS

STANDARD DRAWING

SINGLE COLUMN PIER WITHOUT SIDEWALK (FOR BOX BEAM)
ROADWAY WIDTH 9.00 – 15.00 M., 15.00 M. SPAN,
8.00 M. < HEIGHT ≤ 15.00 M.

DESIGNED : D.O.H. & CONSULTANTS | CHECKED : BUREAU OF LOCATION & DESIGN | DATE : OCT 2015

SUBMITTED : (DIRECTOR OF LOCATION & DESIGN BUREAU) | SCALE : AS SHOWN

APPROVED : (FOR DIRECTOR GENERAL) | DWG NO. PC-219

SHEET NO. 279

D:\std dwg 2015\PC-219(REV00)

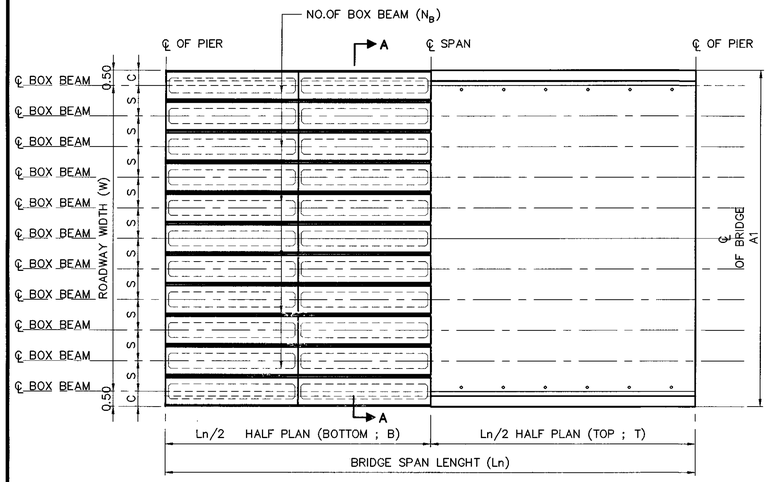

PLAN OF BRIDGE DECK

NOTE :
1. ALL DIMENSIONS SHOWN ARE IN METERS UNLESS OTHERWISE INDICATED
2. LIVE LOADING : VEHICLE LOAD HL-93
3. A MINIMUM ULTIMATE COMPRESSIVE STRENGTH FOR A 150X150X150 MM. CUBE AT 28 DAYS AS FOLLOWS :
   A) FOR COLUMN AND CAP BEAM 35 MPa
   B) FOR FOOTING 35 MPa
4. REBARS SMALLER THAN RB9 MM. SHALL BE TIS 20 GRADE SR 24 PLAIN ROUND BARS, OTHERS SHALL BE TIS 24 GRADE SD50 DEFORMED BARS UNLESS OTHERWISE INDICATED.

1.SPAN LENGTH 20.00 M., 8.00 M. < HEIGHT ≤ 15.00 M.

Ln (M.)	W (M.)	NO.OF BOXBEAM (N_B)	DIMENSION (M.)								C		REBAR COLUMN					
			A1	A2	A3	b	e	S	h1	h2	STRAIGHT	CURVED	Dx1.5D(M.)	CR1	CR2	ST3	CR3	ST4
20.00 M. SEISMIC LEVEL 1	9.00	10	10.00	1.30	1.60	1.60	1.40	2.00	1.00	1.50	1.00	1.00-1.50	1.30x1.95	52-DB28	–	DB12@0.15	38-DB28	DB12@0.30
	10.00	11	11.00	1.40	1.80	1.60	1.45	1.80	1.00	1.50	1.00	1.00-1.50	1.30x1.95	54-DB28	–	DB12@0.15	38-DB28	DB12@0.30
	11.00	12	12.00	1.50	2.00	1.60	1.45	2.00	1.00	1.50	1.00	1.00-1.50	1.30x1.95	66-DB28	–	DB12@0.15	38-DB28	DB12@0.30
	12.00	13	13.00	1.60	2.20	1.60	1.45	1.83	1.00	1.50	1.00	1.00-1.50	1.40x2.10	66-DB28	–	DB12@0.15	44-DB28	DB12@0.30
	13.00	14	14.00	1.70	2.30	1.80	1.60	2.00	1.00	1.70	1.00	1.00-1.50	1.50x2.25	50-DB28	–	DB12@0.15	50-DB28	DB12@0.30
	14.00	15	15.00	1.80	2.50	1.80	1.60	1.86	1.00	1.70	1.00	1.00-1.50	1.50x2.25	50-DB28	–	DB12@0.15	50-DB28	DB12@0.30
	15.00	16	16.00	2.00	2.70	1.80	1.60	2.00	1.00	1.70	1.00	1.00-1.50	1.50x2.25	50-DB28	–	DB12@0.15	50-DB28	DB12@0.30
20.00 M. SEISMIC LEVEL 2	9.00	10	10.00	1.30	1.60	1.60	1.40	2.00	1.00	1.50	1.00	1.00-1.50	1.30x1.95	45-DB28	45-DB28	DB12@0.15	38-DB28	DB12@0.30
	10.00	11	11.00	1.40	1.80	1.60	1.45	1.80	1.00	1.50	1.00	1.00-1.50	1.30x1.95	48-DB28	48-DB28	DB12@0.15	38-DB28	DB12@0.30
	11.00	12	12.00	1.50	2.00	1.60	1.45	2.00	1.00	1.50	1.00	1.00-1.50	1.30x1.95	58-DB28	58-DB28	DB12@0.15	44-DB28	DB12@0.30
	12.00	13	13.00	1.60	2.20	1.60	1.45	1.83	1.00	1.50	1.00	1.00-1.50	1.40x2.10	54-DB28	54-DB28	DB12@0.15	44-DB28	DB12@0.30
	13.00	14	14.00	1.70	2.30	1.80	1.60	2.00	1.00	1.70	1.00	1.00-1.50	1.50x2.25	50-DB28	50-DB28	DB12@0.15	50-DB28	DB12@0.30
	14.00	15	15.00	1.80	2.50	1.80	1.60	1.86	1.00	1.70	1.00	1.00-1.50	1.50x2.25	55-DB28	55-DB28	DB12@0.15	50-DB28	DB12@0.30
	15.00	16	16.00	2.00	2.70	1.80	1.60	2.00	1.00	1.70	1.00	1.00-1.50	1.50x2.25	60-DB28	60-DB28	DB12@0.15	50-DB28	DB12@0.30

Ln (M.)	W (M.)	REBAR CAP BEAM						PILE SIZING, PS (MM.)	Nc1	Nc2	NO.OF PILE	FOOTING SKEW 0°-15°					FOOTING SKEW 16°-45°				
		T1	T2	T3	B1	ST1(STIRRUPS)	ST2(STIRRUPS)					FL	FB	FD	f	g	FL	FB	FD	f	g
20.00 M. SEISMIC LEVEL 1	9.00	16-DB25	16-DB25	–	10-DB20	3-DB12@0.20	4-DB12@0.15	Ø 650x650	6	2	12	10.50	3.25	1.75	1.82	1.95	10.50	3.75	1.75	1.82	2.45
	10.00	16-DB28	16-DB28	–	10-DB20	3-DB12@0.20	4-DB12@0.125	Ø 650x650	6	2	12	11.00	3.25	1.85	1.92	1.95	11.00	3.75	1.85	1.92	2.45
	11.00	15-DB28	15-DB28	15-DB28	12-DB20	3-DB12@0.20	4-DB12@0.125	Ø 650x650	7	2	14	12.00	3.25	2.00	1.77	1.95	12.00	3.75	2.00	1.77	2.45
	12.00	17-DB28	17-DB28	17-DB28	12-DB20	3-DB12@0.15	5-DB12@0.125	Ø 650x650	7	2	14	13.00	3.25	2.00	1.93	1.95	13.00	3.75	2.00	1.93	2.45
	13.00	18-DB28	18-DB28	18-DB28	12-DB20	3-DB12@0.15	5-DB12@0.125	Ø 650x650	8	2	16	14.00	3.25	2.20	1.80	1.95	14.00	3.75	2.20	1.80	2.45
	14.00	19-DB28	19-DB28	19-DB28	12-DB20	3-DB12@0.15	5-DB12@0.125	Ø 650x650	8	2	16	15.00	3.25	2.30	1.94	1.95	15.00	3.75	2.30	1.94	2.45
	15.00	22-DB28	22-DB28	22-DB28	12-DB20	3-DB12@0.15	5-DB12@0.125	Ø 650x650	8	2	16	16.00	3.25	2.45	2.09	1.95	16.00	3.75	2.45	2.09	2.45
20.00 M. SEISMIC LEVEL 2	9.00	16-DB28	16-DB28	–	10-DB20	3-DB12@0.20	4-DB12@0.15	Ø 650x650	6	2	12	10.50	3.25	1.75	1.82	1.95	10.50	3.75	1.75	1.82	2.45
	10.00	16-DB28	16-DB28	–	10-DB20	3-DB12@0.20	4-DB12@0.125	Ø 650x650	6	2	12	11.00	3.25	1.85	1.92	1.95	11.00	3.75	1.85	1.92	2.45
	11.00	15-DB28	15-DB28	15-DB28	12-DB20	3-DB12@0.20	4-DB12@0.125	Ø 650x650	7	2	14	12.00	3.25	2.00	1.77	1.95	12.00	3.75	2.00	1.77	2.45
	12.00	17-DB28	17-DB28	17-DB28	12-DB20	3-DB12@0.15	5-DB12@0.125	Ø 650x650	7	2	14	13.00	3.25	2.00	1.93	1.95	13.00	3.75	2.00	1.93	2.45
	13.00	18-DB28	18-DB28	18-DB28	12-DB20	3-DB12@0.15	5-DB12@0.125	Ø 650x650	8	2	16	14.00	3.25	2.20	1.80	1.95	14.00	3.75	2.20	1.80	2.45
	14.00	19-DB28	19-DB28	19-DB28	12-DB20	3-DB12@0.15	5-DB12@0.125	Ø 650x650	8	2	16	15.00	3.25	2.30	1.94	1.95	15.00	3.75	2.30	1.94	2.45
	15.00	22-DB28	22-DB28	22-DB28	12-DB20	3-DB12@0.15	5-DB12@0.125	Ø 650x650	8	2	16	16.00	3.25	2.45	2.09	1.95	16.00	3.75	2.45	2.09	2.45

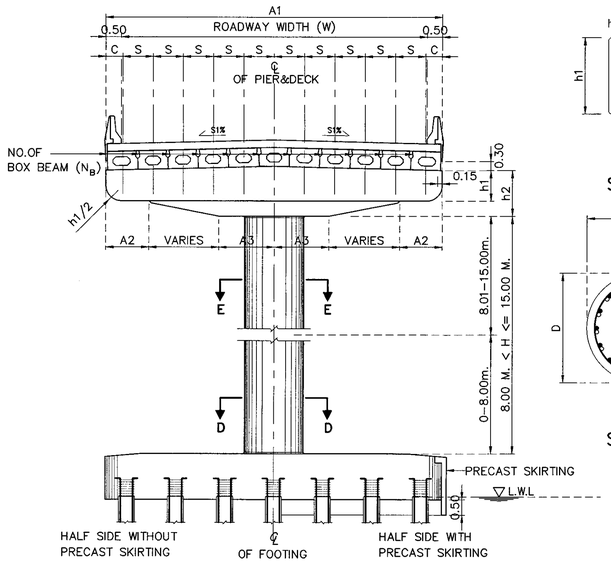

SECTION A-A

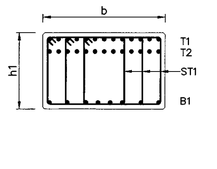

SECTION B-B

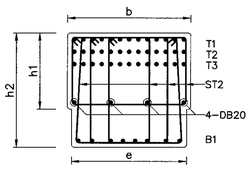

SECTION C-C

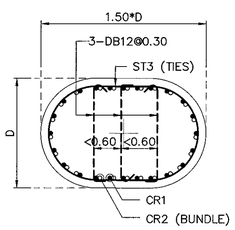

SECTION D-D

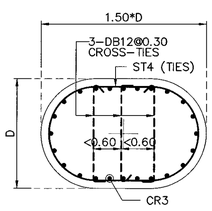

SECTION E-E

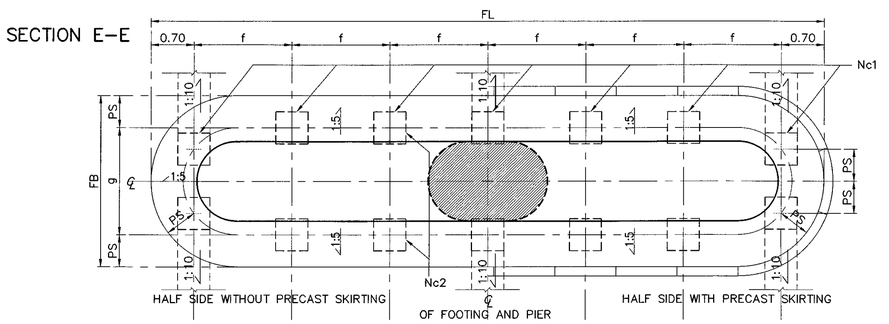

PLAN OF FOOTING

Ln (M.)	W (M.)	BOTTOM REBAR		TOP REBAR	
		BF1	BF2	TF1	TF2
20.00 M. SEISMIC LEVEL 1	9.00	DB28@0.12 **	DB25@0.15	DB20@0.18	DB20@0.20
	10.00	DB28@0.11 **	DB25@0.14	DB20@0.18	DB20@0.18
	11.00	DB28@0.09 **	DB25@0.14	DB20@0.18	DB20@0.18
	12.00	DB32@0.10 **	DB25@0.13	DB20@0.16	DB20@0.17
	13.00	DB32@0.10 **	DB25@0.13	DB20@0.16	DB20@0.17
	14.00	DB32@0.10 **	DB25@0.12	DB20@0.14	DB20@0.15
	15.00	DB32@0.09 **	DB25@0.12	DB20@0.14	DB20@0.15
20.00 M. SEISMIC LEVEL 2	9.00	DB28@0.10 **	DB25@0.15	DB20@0.18	DB20@0.20
	10.00	DB28@0.09 **	DB25@0.14	DB20@0.18	DB20@0.18
	11.00	DB28@0.08 **	DB25@0.14	DB20@0.18	DB20@0.18
	12.00	DB32@0.08 **	DB25@0.13	DB20@0.16	DB20@0.17
	13.00	DB32@0.08 **	DB25@0.13	DB20@0.16	DB20@0.17
	14.00	DB32@0.07 **	DB25@0.12	DB20@0.14	DB20@0.15
	15.00	DB32@0.07 **	DB25@0.12	DB20@0.14	DB20@0.15

REMARK ; ** = 2 LAYERS

ADJUST LENGHT FOR SKEW BRIDGE

VALUE OF SEC θ IN CASE OF SKEW BRIDGE (SKEW, θ)					
SKEW ANGLE, θ (DEGREE)	0	5	10	15	20
SEC θ	1.0000	1.0038	1.0154	1.0353	1.0642
SKEW ANGLE, θ (DEGREE)	25	30	35	40	45
SEC θ	1.1034	1.1547	1.2208	1.3054	1.4142

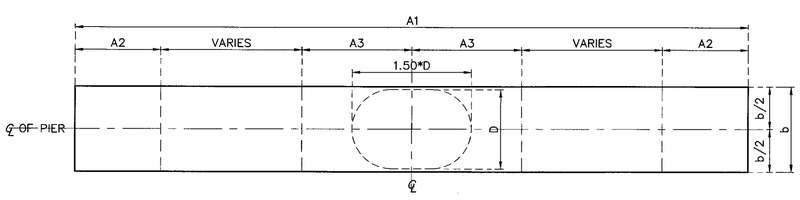

PLAN OF CAP

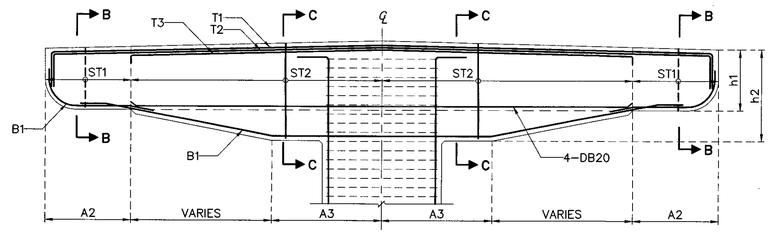

SECTION OF CAP

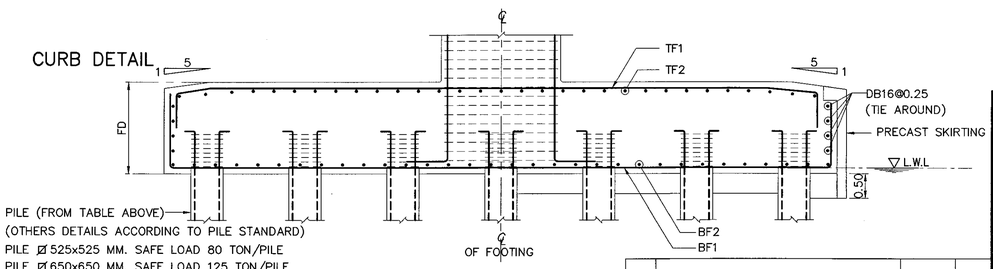

SECTION OF FOOTING

REF.	REVISION	SIGNATURE	DATE

KINGDOM OF THAILAND

MINISTRY OF TRANSPORT

DEPARTMENT OF HIGHWAYS

STANDARD DRAWING

SINGLE COLUMN PIER WITHOUT SIDEWALK (FOR BOX BEAM)
ROADWAY WIDTH 9.00 – 15.00 M., 20.00 M. SPAN,
8.00 M. < HEIGHT ≤ 15.00 M.

DESIGNED : D.O.H. & CONSULTANTS	CHECKED : BUREAU OF LOCATION & DESIGN	DATE : OCT 2015
SUBMITTED : (DIRECTOR OF LOCATION & DESIGN BUREAU)		SCALE : AS SHOWN
APPROVED : (FOR DIRECTOR GENERAL)		DWG NO. PC-220
		SHEET NO. 280

D:\std dwg 2015\PC-220(REV00)

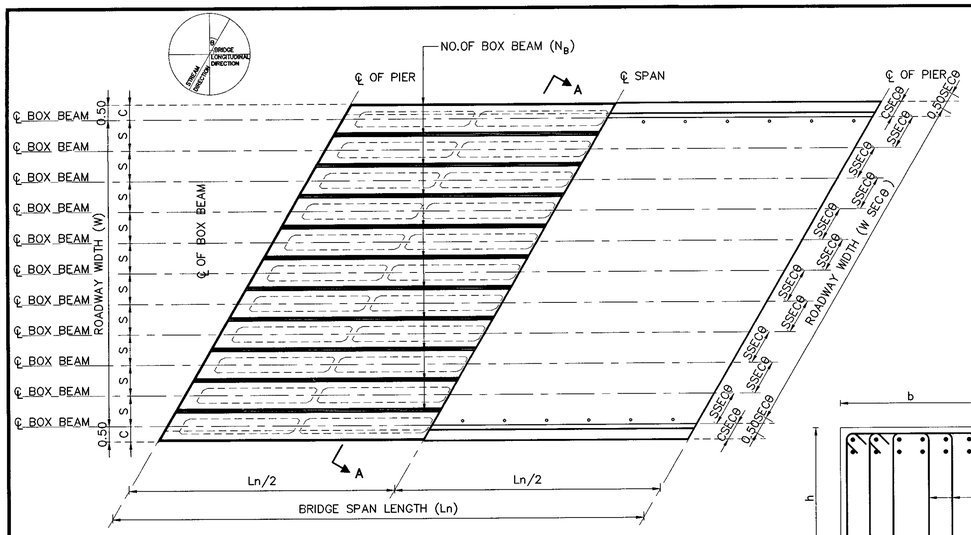

PLAN OF BRIDGE DECK

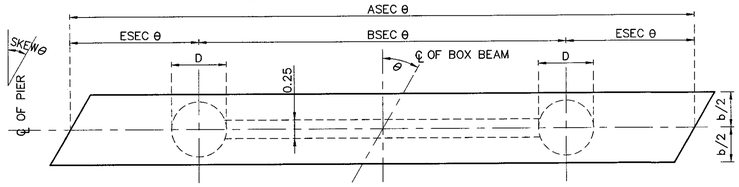

PLAN OF CAP

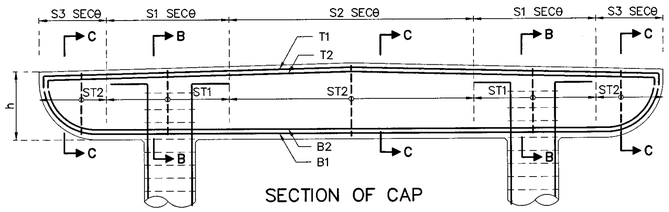

SECTION OF CAP

SECTION B–B

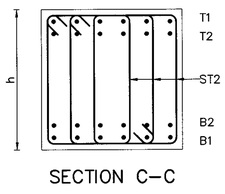

SECTION C–C

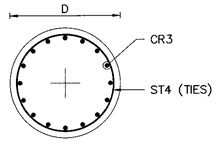

SECTION E–E

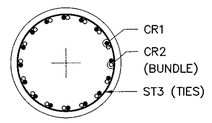

SECTION D–D

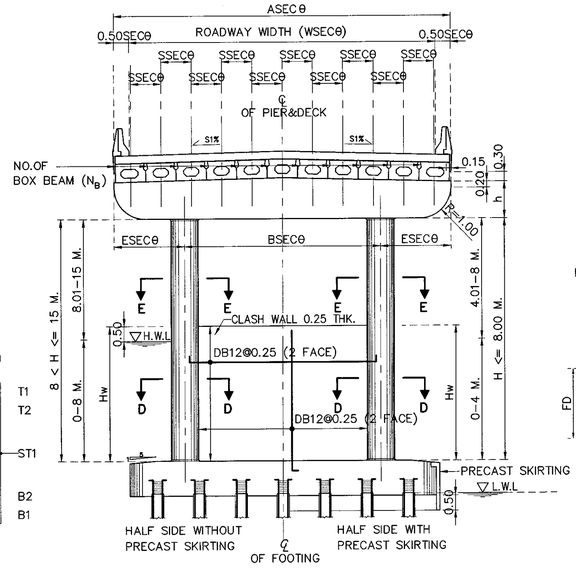

SECTION A–A

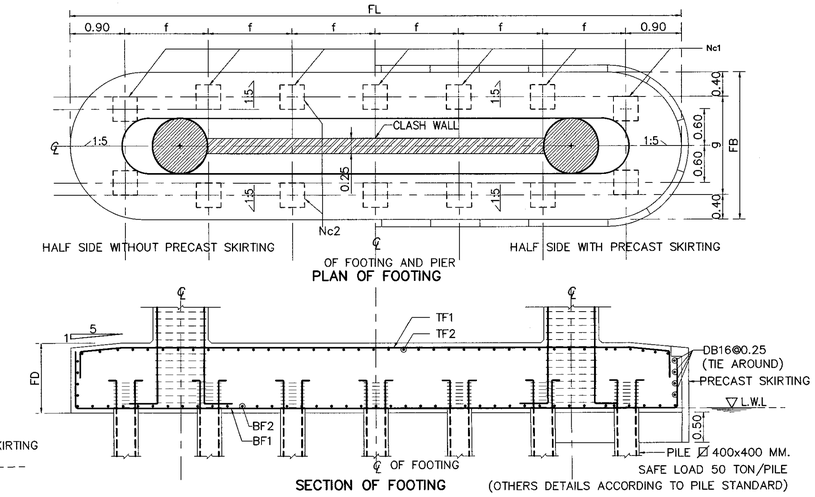

ADJUST LENGTH FOR SKEW BRIDGE

VALUE OF SECθ IN CASE OF SKEW BRIDGE (SKEW, θ)										
SKEW ANGLE, θ (DEGREE)	0	5	10	15	20	25	30	35	40	45
SEC θ	1.0000	1.0038	1.0154	1.0353	1.0642	1.1034	1.1547	1.2208	1.3054	1.4142

1. SPAN 15.00 M., HEIGHT ≤ 15.00 M.

1.1 DIMENSION OF SUBSTRUCTURE & REBAR OF COLUMN

Ln (M.)	W (M.)	NO.OF BOXBEAM (N_B)	DIMENSION (M.)							C		REBAR COLUMN					
			A	B	E	S	S1	S2	S3	STRAIGHT	CURVED	D (M.)	CR1	CR2	ST3	CR3	ST4
15.00 M. SEISMIC LEVEL 1	9.00	10	10.00	5.80	2.10	1.00	2.20	3.60	1.00	1.00	1.00–1.50	1.10	24–DB25	24–DB25	DB12@0.15	24–DB25	DB12@0.30
	10.00	11	11.00	6.40	2.30	1.00	4.60	1.80	–	1.00	1.00–1.50	1.10	25–DB25	25–DB25	DB12@0.15	25–DB25	DB12@0.30
	11.00	12	12.00	7.00	2.50	1.00	5.00	2.00	–	1.00	1.00–1.50	1.20	26–DB25	26–DB25	DB12@0.15	26–DB25	DB12@0.30
	12.00	13	13.00	7.30	2.85	1.00	3.70	3.60	1.00	1.00	1.00–1.50	1.20	28–DB25	28–DB25	DB12@0.15	28–DB25	DB12@0.30
15.00 M. SEISMIC LEVEL 2	9.00	10	10.00	5.80	2.10	1.00	2.20	3.60	1.00	1.00	1.00–1.50	1.10	28–DB25	28–DB25	DB12@0.15	28–DB25	DB12@0.30
	10.00	11	11.00	6.40	2.30	1.00	4.60	1.80	–	1.00	1.00–1.50	1.10	30–DB25	30–DB25	DB12@0.15	30–DB25	DB12@0.30
	11.00	12	12.00	7.00	2.50	1.00	5.00	2.00	–	1.00	1.00–1.50	1.20	31–DB25	31–DB25	DB12@0.15	31–DB25	DB12@0.30
	12.00	13	13.00	7.30	2.85	1.00	3.70	3.60	1.00	1.00	1.00–1.50	1.20	32–DB25	32–DB25	DB12@0.15	32–DB25	DB12@0.30

1.2 REBAR OF CAP BEAM

Ln (M.)	W (M.)	b	h	SKEW 0–30 DEGREE						SKEW 31–45 DEGREE					
				T1	T2	B1	B2	ST1(STIRRUPS)	ST2(STIRRUPS)	T1	T2	B1	B2	ST1(STIRRUPS)	ST2(STIRRUPS)
15.00 M. SEISMIC LEVEL 1	9.00	1.30	1.20	13–DB25	–	13–DB25	–	4–DB12@0.150	2–DB12@0.150	14–DB25	–	14–DB25	–	4–DB12@0.150	2–DB12@0.150
	10.00	1.30	1.20	14–DB25	–	14–DB25	–	4–DB12@0.150	2–DB12@0.150	15–DB25	–	15–DB25	–	4–DB12@0.150	2–DB12@0.150
	11.00	1.40	1.20	15–DB25	–	15–DB25	–	4–DB12@0.150	2–DB12@0.150	16–DB25	–	16–DB25	–	4–DB12@0.150	2–DB12@0.150
	12.00	1.40	1.20	16–DB25	–	16–DB25	–	4–DB12@0.150	2–DB12@0.150	18–DB25	–	18–DB25	–	4–DB12@0.150	2–DB12@0.150
15.00 M. SEISMIC LEVEL 2	9.00	1.30	1.20	13–DB25	–	13–DB25	–	4–DB12@0.150	2–DB12@0.150	14–DB25	–	14–DB25	–	4–DB12@0.150	2–DB12@0.150
	10.00	1.30	1.20	14–DB25	–	14–DB25	–	4–DB12@0.150	2–DB12@0.150	15–DB25	–	15–DB25	–	4–DB12@0.150	2–DB12@0.150
	11.00	1.40	1.20	15–DB25	–	15–DB25	–	4–DB12@0.150	2–DB12@0.150	16–DB25	–	16–DB25	–	4–DB12@0.150	2–DB12@0.150
	12.00	1.40	1.20	16–DB25	–	16–DB25	–	4–DB12@0.150	2–DB12@0.150	18–DB25	–	18–DB25	–	4–DB12@0.150	2–DB12@0.150

1.3 FOUNDATION & PILE

Ln (M.)	W (M.)	PILE SIZING (MM.)	Nc1	Nc2	NO.OF PILE	FOOTING DIMENSION (M.)					BOTTOM REBAR		TOP REBAR	
						FL	FB	FD	f	g	BF1	BF2	TF1	TF2
15.00 M. SEISMIC LEVEL 1	9.00	⌀ 400x400	7	2	14	10.00	2.60	1.50	1.37	1.80	DB25@0.10	DB25@0.175	DB25@0.10	DB20@0.20.
	10.00	⌀ 400x400	7	2	14	10.50	2.60	1.50	1.45	1.80	DB28@0.10	DB25@0.175	DB28@0.10	DB20@0.20.
	11.00	⌀ 400x400	8	2	16	11.00	2.60	1.50	1.31	1.80	DB28@0.15 **	DB25@0.175	DB28@0.15 **	DB20@0.20.
	12.00	⌀ 400x400	8	2	16	12.00	2.60	1.50	1.46	1.80	DB28@0.125 **	DB25@0.175	DB28@0.125 **	DB20@0.20.
15.00 M. SEISMIC LEVEL 2	9.00	⌀ 400x400	7	2	14	10.00	2.60	1.50	1.37	1.80	DB25@0.10	DB25@0.175	DB25@0.10	DB20@0.20.
	10.00	⌀ 400x400	7	2	14	10.50	2.60	1.50	1.45	1.80	DB28@0.10	DB25@0.175	DB28@0.10	DB20@0.20.
	11.00	⌀ 400x400	8	2	16	11.00	2.60	1.50	1.31	1.80	DB28@0.15 **	DB25@0.175	DB28@0.15 **	DB20@0.20.
	12.00	⌀ 400x400	8	2	16	12.00	2.60	1.50	1.46	1.80	DB28@0.125 **	DB25@0.175	DB28@0.125 **	DB20@0.20.

2.SPAN 20.00 M., HEIGHT ≤ 15.00 M.

2.1 DIMENSION OF SUBSTRUCTURE & REBAR OF COLUMN

Ln (M.)	W (M.)	NO.OF BOXBEAM (N_B)	DIMENSION (M.)							C		REBAR COLUMN					
			A	B	E	S	S1	S2	S3	STRAIGHT	CURVED	D (M.)	CR1	CR2	ST3	CR3	ST4
20.00 M. SEISMIC LEVEL 1	9.00	10	10.00	5.80	2.10	1.00	2.20	3.60	1.00	1.00	1.00–1.50	1.10	24–DB25	24–DB25	DB12@0.15	24–DB25	DB12@0.30
	10.00	11	11.00	6.40	2.30	1.00	4.60	1.80	–	1.00	1.00–1.50	1.10	25–DB25	25–DB25	DB12@0.15	25–DB25	DB12@0.30
	11.00	12	12.00	7.00	2.50	1.00	5.00	2.00	–	1.00	1.00–1.50	1.20	26–DB25	26–DB25	DB12@0.15	26–DB25	DB12@0.30
	12.00	13	13.00	7.30	2.85	1.00	3.70	3.60	1.00	1.00	1.00–1.50	1.20	27–DB25	27–DB25	DB12@0.15	27–DB25	DB12@0.30
20.00 M. SEISMIC LEVEL 2	9.00	10	10.00	5.80	2.10	1.00	2.20	3.60	1.00	1.00	1.00–1.50	1.10	38–DB25	38–DB25	DB12@0.15	38–DB25	DB12@0.30
	10.00	11	11.00	6.40	2.30	1.00	4.60	1.80	–	1.00	1.00–1.50	1.10	42–DB25	42–DB25	DB12@0.15	42–DB25	DB12@0.30
	11.00	12	12.00	7.00	2.50	1.00	5.00	2.00	–	1.00	1.00–1.50	1.20	42–DB25	42–DB25	DB12@0.15	42–DB25	DB12@0.30
	12.00	13	13.00	7.30	2.85	1.00	3.70	3.60	1.00	1.00	1.00–1.50	1.20	42–DB25	42–DB25	DB12@0.15	42–DB25	DB12@0.30

2.2 REBAR OF CAP BEAM

Ln (M.)	W (M.)	b	h	SKEW 0–30 DEGREE						SKEW 31–45 DEGREE					
				T1	T2	B1	B2	ST1(STIRRUPS)	ST2(STIRRUPS)	T1	T2	B1	B2	ST1(STIRRUPS)	ST2(STIRRUPS)
20.00 M. SEISMIC LEVEL 1	9.00	1.30	1.20	14–DB25	–	14–DB25	–	4–DB12@0.175	3–DB12@0.15	14–DB25	–	14–DB25	–	4–DB12@0.175	3–DB12@0.15
	10.00	1.30	1.20	15–DB25	–	15–DB25	–	4–DB12@0.175	3–DB12@0.15	15–DB25	–	15–DB25	–	4–DB12@0.175	3–DB12@0.15
	11.00	1.40	1.20	17–DB25	–	17–DB25	–	4–DB12@0.15	3–DB12@0.15	17–DB25	–	17–DB25	–	4–DB12@0.15	3–DB12@0.15
	12.00	1.40	1.20	18–DB25	–	18–DB25	–	5–DB12@0.15	3–DB12@0.15	18–DB25	–	18–DB25	–	5–DB12@0.15	3–DB12@0.15
20.00 M. SEISMIC LEVEL 2	9.00	1.30	1.20	14–DB25	–	14–DB25	–	4–DB12@0.175	3–DB12@0.15	14–DB25	–	14–DB25	–	4–DB12@0.175	3–DB12@0.15
	10.00	1.30	1.20	15–DB25	–	15–DB25	–	4–DB12@0.175	3–DB12@0.15	15–DB25	–	15–DB25	–	4–DB12@0.175	3–DB12@0.15
	11.00	1.40	1.20	17–DB25	–	17–DB25	–	4–DB12@0.15	3–DB12@0.15	17–DB25	–	17–DB25	–	4–DB12@0.15	3–DB12@0.15
	12.00	1.40	1.20	18–DB25	–	18–DB25	–	5–DB12@0.15	3–DB12@0.15	18–DB25	–	18–DB25	–	5–DB12@0.15	3–DB12@0.15

2.3 FOUNDATION & PILE

Ln (M.)	W (M.)	PILE SIZING (MM.)	Nc1	Nc2	NO.OF PILE	FOOTING DIMENSION (M.)					BOTTOM REBAR		TOP REBAR	
						FL	FB	FD	f	g	BF1	BF2	TF1	TF2
20.00 M. SEISMIC LEVEL 1	9.00	⌀ 400x400	8	2	16	10.00	2.60	1.50	1.17	1.80	DB25@0.10	DB25@0.175	DB25@0.10	DB20@0.20.
	10.00	⌀ 400x400	8	2	16	11.00	2.60	1.50	1.31	1.80	DB28@0.10	DB25@0.175	DB28@0.10	DB20@0.20.
	11.00	⌀ 400x400	9	2	18	11.00	2.60	1.50	1.15	1.80	DB28@0.125 **	DB25@0.175	DB28@0.125 **	DB20@0.20.
	12.00	⌀ 400x400	9	2	18	12.50	2.60	1.50	1.34	1.80	DB28@0.10 **	DB25@0.175	DB28@0.10 **	DB20@0.20.
20.00 M. SEISMIC LEVEL 2	9.00	⌀ 400x400	8	2	16	10.00	2.60	1.50	1.17	1.80	DB25@0.10	DB25@0.175	DB25@0.10	DB20@0.20.
	10.00	⌀ 400x400	8	2	16	11.00	2.60	1.50	1.31	1.80	DB28@0.10	DB25@0.175	DB28@0.10	DB20@0.20.
	11.00	⌀ 400x400	9	2	18	11.00	2.60	1.50	1.15	1.80	DB28@0.125 **	DB25@0.175	DB28@0.125 **	DB20@0.20.
	12.00	⌀ 400x400	9	2	18	12.50	2.60	1.50	1.34	1.80	DB28@0.10 **	DB25@0.175	DB28@0.10 **	DB20@0.20.

REMARK ; ** = 2 LAYERS

NOTE :
1. ALL DIMENSIONS SHOWN ARE IN METERS UNLESS OTHERWISE INDICATED
2. LIVE LOADING : VEHICLE LOAD HL-93
3. A MINIMUM ULTIMATE COMPRESSIVE STRENGTH FOR A 150X150X150 MM. CUBE AT 28 DAYS AS FOLLOWS :
   A) FOR COLUMN AND CAP BEAM 35 MPa
   B) FOR FOOTING 35 MPa
4. REBARS SMALLER THAN RB9 MM. SHALL BE TIS 20 GRADE SR 24 PLAIN ROUND BARS, OTHERS SHALL BE TIS 24 GRADE SD40 DEFORMED BARS UNLESS OTHERWISE INDICATED.

REF.	REVISION	SIGNATURE	DATE

KINGDOM OF THAILAND

MINISTRY OF TRANSPORT

DEPARTMENT OF HIGHWAYS

STANDARD DRAWING

TWO COLUMNS PIER WITHOUT SIDEWALK (FOR BOX BEAM)
ROADWAY WIDTH 9.00 – 12.00 M., 15.00 M.
AND 20.00 M. SPAN, HEIGHT ≤ 15.00 M.

DESIGNED : D.O.H. & CONSULTANTS	CHECKED : BUREAU OF LOCATION & DESIGN	DATE : OCT 2015
SUBMITTED : (DIRECTOR OF LOCATION & DESIGN BUREAU)		SCALE : AS SHOWN
APPROVED : (FOR DIRECTOR GENERAL)		DWG NO. PC–221
		SHEET NO. 281

D:\std dwg 2015\PC-221(REV00)

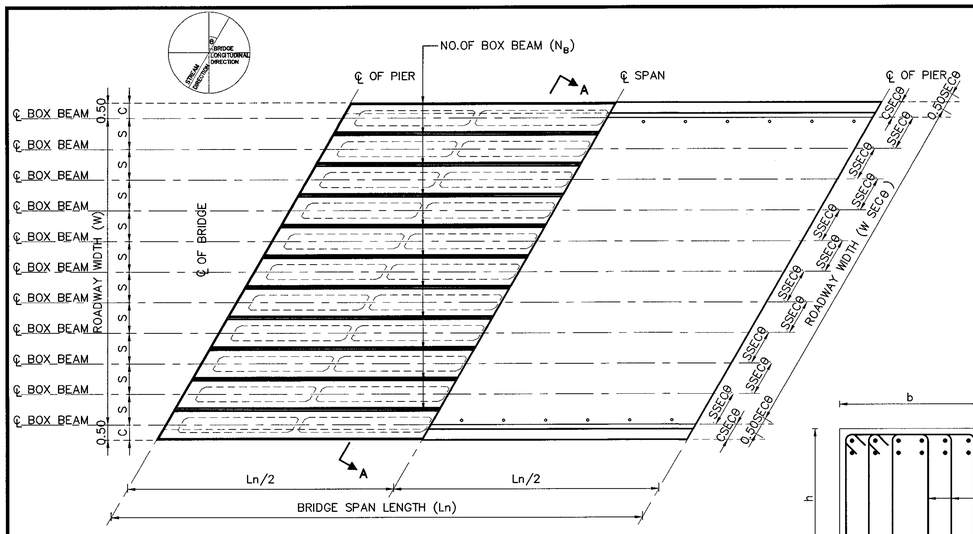

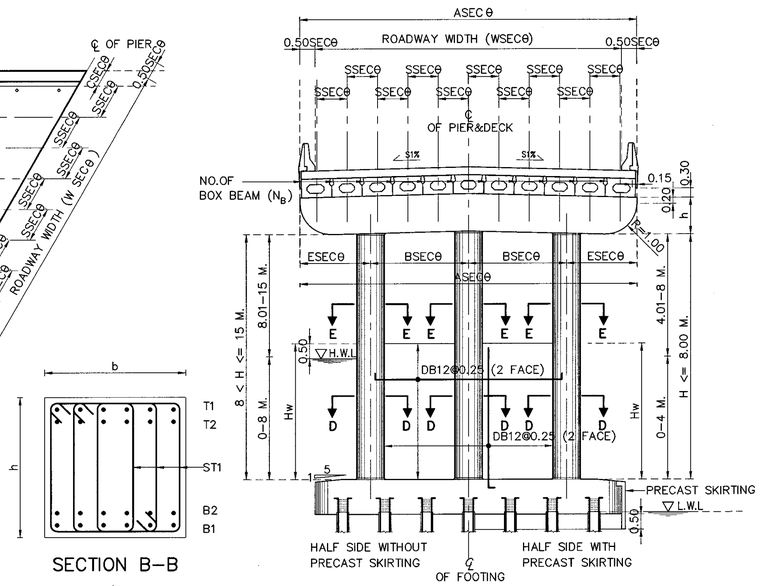

SECTION A–A

SECTION B–B

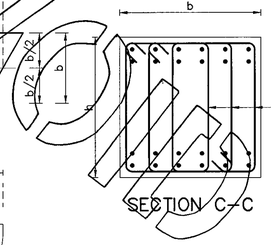

SECTION C–C

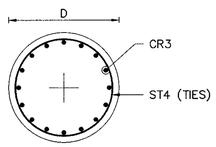

SECTION E–E

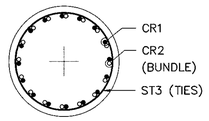

SECTION D–D

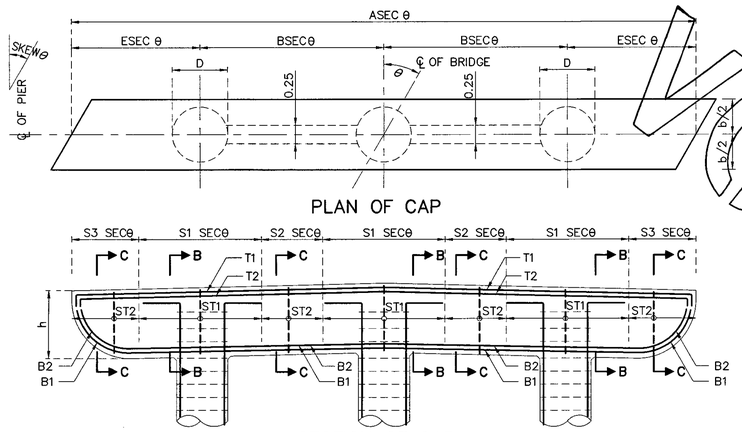

PLAN OF CAP

SECTION OF CAP

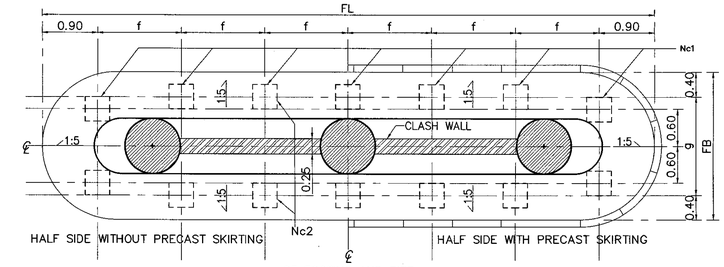

PLAN OF FOOTING

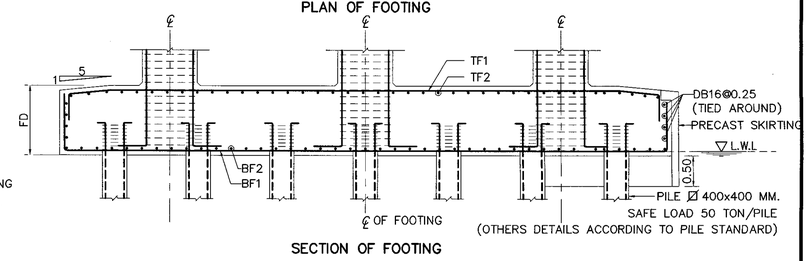

SECTION OF FOOTING

ADJUST LENGTH FOR SKEW BRIDGE

VALUE OF SECθ IN CASE OF SKEW BRIDGE (SKEW, θ)									
SKEW ANGLE, θ (DEGREE)	0	5	10	15	20	25	30	35	40	45
SEC θ	1.0000	1.0038	1.0154	1.0353	1.0642	1.1034	1.1547	1.2208	1.3054	1.4142

1.SPAN 15.00 M., HEIGHT ≤ 15.00 M.

1.1 DIMENSION OF SUBSTRUCTURE & REBAR OF COLUMN

Ln (M.)	W (M.)	NO.OF BOXBEAM (N_B)	DIMENSION (M.)							C		REBAR COLUMN					
			A	B	E	S	S1	S2	S3	STRAIGHT	CURVED	D (M.)	CR1	CR2	ST3	CR3	ST4
15.00 M. SEISMIC LEVEL 1	13.00	14	14.00	5.10	1.90	1.00	3.80	1.30	–	1.00	1.00–1.25	1.00	25–DB25	25–DB25	DB12@0.15	25–DB25	DB12@0.30
	14.00	15	15.00	5.30	2.20	1.00	2.40	2.90	1.00	1.00	1.00–1.25	1.00	26–DB25	26–DB25	DB12@0.15	26–DB25	DB12@0.30
	15.00	16	16.00	5.70	2.30	1.00	2.60	3.10	1.00	1.00	1.00–1.25	1.00	27–DB25	27–DB58	DB12@0.15	27–DB25	DB12@0.30
15.00 M. SEISMIC LEVEL 2	13.00	14	14.00	5.10	1.90	1.00	3.80	1.30	–	1.00	1.00–1.25	1.00	29–DB25	29–DB25	DB12@0.15	29–DB25	DB12@0.30
	14.00	15	15.00	5.30	2.20	1.00	2.40	2.90	1.00	1.00	1.00–1.25	1.00	31–DB25	31–DB25	DB12@0.15	31–DB25	DB12@0.30
	15.00	16	16.00	5.70	2.30	1.00	2.60	3.10	1.00	1.00	1.00–1.25	1.00	33–DB25	33–DB25	DB12@0.15	33–DB25	DB12@0.30

1.2 REBAR OF CAP BEAM

Ln (M.)	W (M.)	b	h	SKEW 0–30						SKEW 31–45					
				T1	T2	B1	B2	ST1(STIRRUPS)	ST2(STIRRUPS)	T1	T2	B1	B2	ST1(STIRRUPS)	ST2(STIRRUPS)
15.00 M. SEISMIC LEVEL 1	13.00	1.20	1.00		–	11–DB25	–	4–DB12@0.15	4–DB12@0.30		–	11–DB25	–	4–DB12@0.15	4–DB12@0.30
	14.00	1.20	1.00		–	13–DB25	–	4–DB12@0.15	4–DB12@0.30		–	13–DB25	–	4–DB12@0.15	4–DB12@0.30
	15.00	1.20	1.00		–	14–DB25	–	4–DB12@0.15	4–DB12@0.30		–	14–DB25	–	4–DB12@0.15	4–DB12@0.30
15.00 M. SEISMIC LEVEL 2	13.00	1.20	1.00		–	11–DB25	–	4–DB12@0.15	4–DB12@0.30		–	11–DB25	–	4–DB12@0.15	4–DB12@0.30
	14.00	1.20	1.00		–	13–DB25	–	4–DB12@0.15	4–DB12@0.30		–	13–DB25	–	4–DB12@0.15	4–DB12@0.30
	15.00	1.20	1.00		–	14–DB25	–	4–DB12@0.15	4–DB12@0.30		–	14–DB25	–	4–DB12@0.15	4–DB12@0.30

1.3 FOUNDATION & PILE

Ln (M.)	W (M.)	PILE SIZING (MM.)	Nc1	Nc2	NO.OF PILE	FOOTING DIMENSION (M.)					BOTTOM REBAR		TOP REBAR	
						FL	FB	FD	f	g	BF1	BF2	TF1	TF2
15.00 M. SEISMIC LEVEL 1	13.00	Ø 400x400	8	2	16	14.00	2.60	1.20	1.74	1.80	DB25@0.15	DB25@0.20	DB25@0.15	DB20@0.25
	14.00	Ø 400x400	8	2	16	15.00	2.60	1.20	1.89	1.80	DB25@0.14	DB25@0.20	DB25@0.14	DB20@0.25
	15.00	Ø 400x400	9	2	18	16.00	2.60	1.20	1.78	1.80	DB25@0.13	DB25@0.20	DB25@0.13	DB20@0.25
15.00 M. SEISMIC LEVEL 2	13.00	Ø 400x400	8	2	16	14.00	2.60	1.20	1.74	1.80	DB25@0.14	DB25@0.20	DB25@0.14	DB20@0.25
	14.00	Ø 400x400	8	2	16	15.00	2.60	1.20	1.89	1.80	DB25@0.13	DB25@0.20	DB25@0.13	DB20@0.25
	15.00	Ø 400x400	9	2	18	16.00	2.60	1.20	1.78	1.80	DB25@0.12	DB25@0.20	DB25@0.12	DB20@0.25

2.SPAN 20.00 M., HEIGHT ≤ 15.00 M.

2.1 DIMENSION OF SUBSTRUCTURE & REBAR OF COLUMN

Ln (M.)	W (M.)	NO.OF BOXBEAM (N_B)	DIMENSION (M.)							C		REBAR COLUMN					
			A	B	E	S	S1	S2	S3	STRAIGHT	CURVED	D (M.)	CR1	CR2	ST3	CR3	ST4
20.00 M. SEISMIC LEVEL 1	13.00	14	14.00	5.10	1.90	1.00	3.80	1.30	–	1.00	1.00–1.25	1.00	26–DB25	26–DB25	DB12@0.15	26–DB25	DB12@0.30
	14.00	15	15.00	5.30	2.20	1.00	2.40	2.90	1.00	1.00	1.00–1.25	1.00	27–DB25	27–DB25	DB12@0.15	27–DB25	DB12@0.30
	15.00	16	16.00	5.70	2.30	1.00	2.60	3.10	1.00	1.00	1.00–1.25	1.00	28–DB25	28–DB25	DB12@0.15	28–DB25	DB12@0.30
20.00 M. SEISMIC LEVEL 2	13.00	14	14.00	5.10	1.90	1.00	3.80	1.30	–	1.00	1.00–1.25	1.00	33–DB28	33–DB28	DB12@0.15	33–DB28	DB12@0.30
	14.00	15	15.00	5.30	2.20	1.00	2.40	2.90	1.00	1.00	1.00–1.25	1.00	35–DB28	35–DB28	DB12@0.15	35–DB28	DB12@0.30
	15.00	16	16.00	5.70	2.30	1.00	2.60	3.10	1.00	1.00	1.00–1.25	1.00	36–DB28	36–DB28	DB12@0.15	36–DB28	DB12@0.30

2.2 REBAR OF CAP BEAM

Ln (M.)	W (M.)	b	h	SKEW 0–30						SKEW 31–45					
				T1	T2	B1	B2	ST1(STIRRUPS)	ST2(STIRRUPS)	T1	T2	B1	B2	ST1(STIRRUPS)	ST2(STIRRUPS)
20.00 M. SEISMIC LEVEL 1	13.00	1.20	1.00	11–DB25	–	11–DB25	–	4–DB12@0.15	4–DB12@0.30	11–DB25	–	11–DB25	–	4–DB12@0.15	4–DB12@0.30
	14.00	1.20	1.00	13–DB25	–	13–DB25	–	4–DB12@0.15	4–DB12@0.20	13–DB25	–	13–DB25	–	4–DB12@0.15	4–DB12@0.20
	15.00	1.20	1.00	14–DB25	–	14–DB25	–	4–DB12@0.15	4–DB12@0.20	14–DB25	–	14–DB25	–	4–DB12@0.15	4–DB12@0.20
20.00 M. SEISMIC LEVEL 2	13.00	1.20	1.00	13–DB25	–	13–DB25	–	4–DB12@0.15	4–DB12@0.30	13–DB25	–	13–DB25	–	4–DB12@0.15	4–DB12@0.30
	14.00	1.20	1.00	13–DB25	–	13–DB25	–	4–DB12@0.15	4–DB12@0.20	13–DB25	–	13–DB25	–	4–DB12@0.15	4–DB12@0.20
	15.00	1.20	1.00	14–DB25	–	14–DB25	–	4–DB12@0.15	4–DB12@0.20	14–DB25	–	14–DB25	–	4–DB12@0.15	4–DB12@0.20

2.3 FOUNDATION & PILE

Ln (M.)	W (M.)	PILE SIZING (MM.)	Nc1	Nc2	NO.OF PILE	FOOTING DIMENSION (M.)					BOTTOM REBAR		TOP REBAR	
						FL	FB	FD	f	g	BF1	BF2	TF1	TF2
20.00 M. SEISMIC LEVEL 1	13.00	Ø 400x400	10	2	20	14.00	2.60	1.20	1.36	1.80	DB25@0.15	DB25@0.20	DB25@0.15	DB20@0.25
	14.00	Ø 400x400	10	2	20	15.00	2.60	1.20	1.47	1.80	DB25@0.14	DB25@0.20	DB25@0.14	DB20@0.25
	15.00	Ø 400x400	11	2	22	16.00	2.60	1.20	1.42	1.80	DB25@0.13	DB25@0.20	DB25@0.13	DB20@0.25
20.00 M. SEISMIC LEVEL 2	13.00	Ø 400x400	10	2	20	14.00	2.60	1.20	1.36	1.80	DB25@0.14	DB25@0.20	DB25@0.14	DB20@0.25
	14.00	Ø 400x400	10	2	20	15.00	2.60	1.20	1.47	1.80	DB25@0.13	DB25@0.20	DB25@0.13	DB20@0.25
	15.00	Ø 400x400	11	2	22	16.00	2.60	1.20	1.42	1.80	DB25@0.12	DB25@0.20	DB25@0.12	DB20@0.25

NOTE :
1. ALL DIMENSIONS SHOWN ARE IN METERS UNLESS OTHERWISE INDICATED
2. LIVE LOADING : VEHICLE LOAD HL–93
3. A MINIMUM ULTIMATE COMPRESSIVE STRENGTH FOR A 150X150X150 MM. CUBE AT 28 DAYS AS FOLLOWS :
   A) FOR COLUMN AND CAP BEAM 35 MPa
   B) FOR FOOTING 35 MPa
4. REBARS SMALLER THAN RB9 MM. SHALL BE TIS 20 GRADE SR 24 PLAIN ROUND BARS, OTHERS SHALL BE TIS 24 GRADE SD40 DEFORMED BARS UNLESS OTHERWISE INDICATED.

REF.	REVISION	SIGNATURE	DATE

KINGDOM OF THAILAND

MINISTRY OF TRANSPORT

DEPARTMENT OF HIGHWAYS

STANDARD DRAWING

THREE COLUMNS PIER WITHOUT SIDEWALK (FOR BOX BEAM)
ROADWAY WIDTH 13.00 – 15.00 M., 15.00 M.
AND 20.00 M. SPAN, HEIGHT ≤ 15.00 M.

DESIGNED : D.O.H. & CONSULTANTS | CHECKED : BUREAU OF LOCATION & DESIGN | DATE : OCT 2015

SUBMITTED : (DIRECTOR OF LOCATION & DESIGN BUREAU) | SCALE : AS SHOWN

APPROVED : (FOR DIRECTOR GENERAL) | DWG NO. PC–222 | SHEET NO. 282

D:\std dwg 2015\PC–222(REV00)

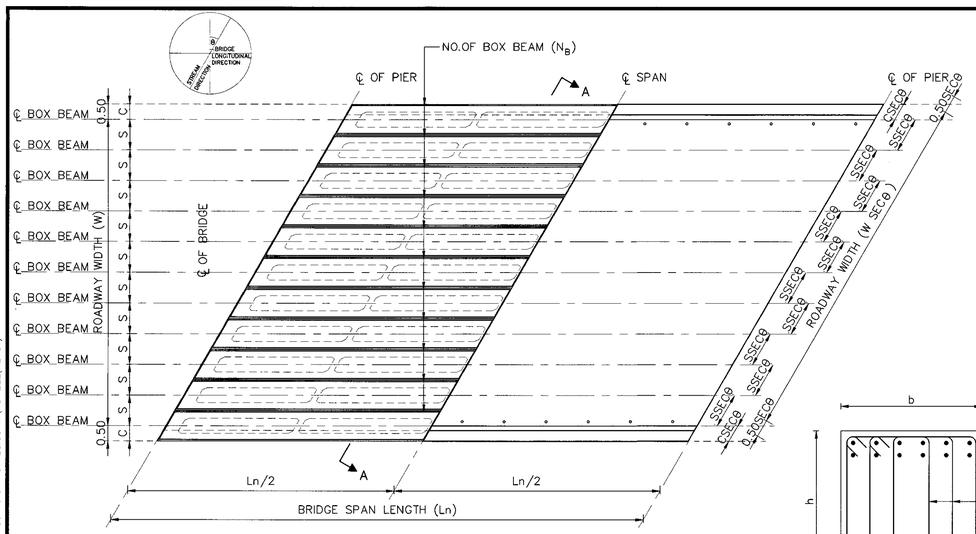

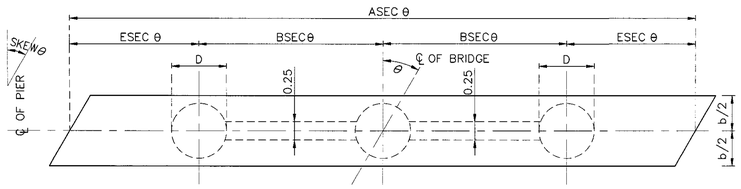

PLAN OF CAP

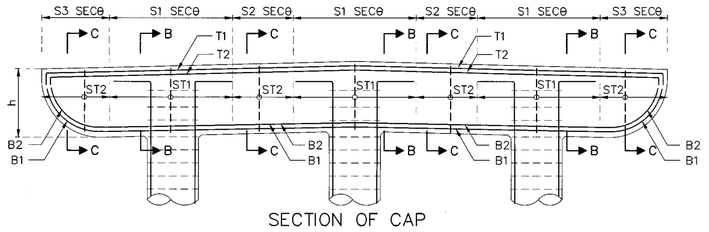

SECTION OF CAP

SECTION B–B

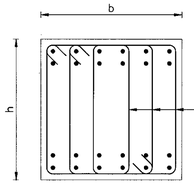

SECTION C–C

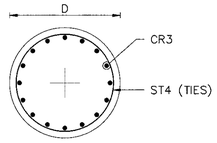

SECTION E–E

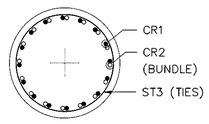

SECTION D–D

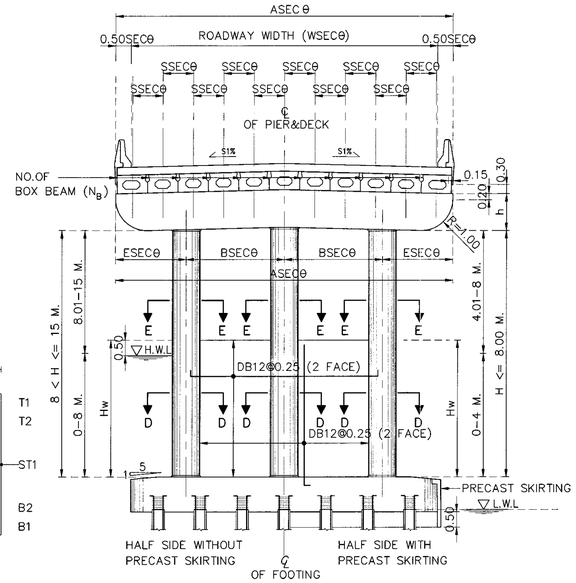

SECTION A–A

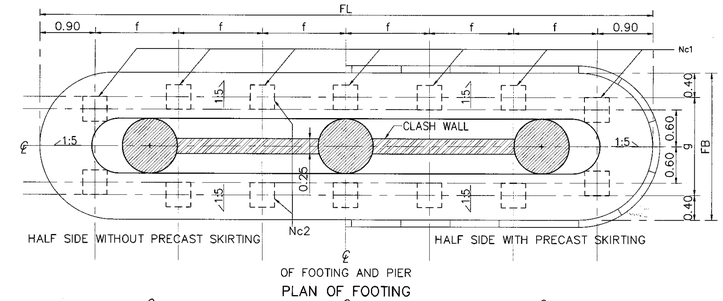

PLAN OF FOOTING

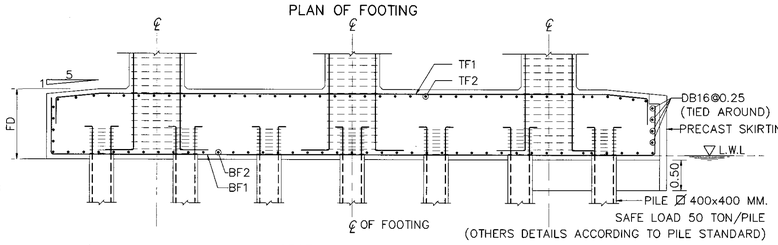

SECTION OF FOOTING

ADJUST LENGTH FOR SKEW BRIDGE

	VALUE OF SECθ IN CASE OF SKEW BRIDGE (SKEW, θ)									
SKEW ANGLE, θ (DEGREE)	0	5	10	15	20	25	30	35	40	45
SEC θ	1.0000	1.0038	1.0154	1.0353	1.0642	1.1034	1.1547	1.2208	1.3054	1.4142

1.SPAN 15.00 M., HEIGHT ≤ 15.00 M.

1.1 DIMENSION OF SUBSTRUCTURE & REBAR OF COLUMN

Ln (M.)	W (M.)	NO.OF BOXBEAM (N_B)	DIMENSION (M.)							C		REBAR COLUMN					
			A	B	E	S	S1	S2	S3	STRAIGHT	CURVED	D (M.)	CR1	CR2	ST3	CR3	ST4
15.00 M. SEISMIC LEVEL 1	13.00	14	14.00	5.10	1.90	1.00	3.80	1.30	–	1.00	1.00–1.25	1.00	25–DB25	25–DB25	DB12@0.15	25–DB25	DB12@0.30
	14.00	15	15.00	5.30	2.20	1.00	2.40	2.90	1.00	1.00	1.00–1.25	1.00	26–DB25	26–DB25	DB12@0.15	26–DB25	DB12@0.30
	15.00	16	16.00	5.70	2.30	1.00	2.60	3.10	1.00	1.00	1.00–1.25	1.00	27–DB25	27–DB58	DB12@0.15	27–DB25	DB12@0.30
15.00 M. SEISMIC LEVEL 2	13.00	14	14.00	5.10	1.90	1.00	3.80	1.30	–	1.00	1.00–1.25	1.00	29–DB25	29–DB25	DB12@0.15	29–DB25	DB12@0.30
	14.00	15	15.00	5.30	2.20	1.00	2.40	2.90	1.00	1.00	1.00–1.25	1.00	31–DB25	31–DB25	DB12@0.15	31–DB25	DB12@0.30
	15.00	16	16.00	5.70	2.30	1.00	2.60	3.10	1.00	1.00	1.00–1.25	1.00	33–DB25	33–DB25	DB12@0.15	33–DB25	DB12@0.30

1.2 REBAR OF CAP BEAM

Ln (M.)	W (M.)	b	h	SKEW 0–30						SKEW 31–45					
				T1	T2	B1	B2	ST1(STIRRUPS)	ST2(STIRRUPS)	T1	T2	B1	B2	ST1(STIRRUPS)	ST2(STIRRUPS)
15.00 M. SEISMIC LEVEL 1	13.00	1.20	1.00		–	11–DB25	–	4–DB12@0.15	4–DB12@0.30		–	11–DB25	–	4–DB12@0.15	4–DB12@0.30
	14.00	1.20	1.00		–	13–DB25	–	4–DB12@0.15	4–DB12@0.30		–	13–DB25	–	4–DB12@0.15	4–DB12@0.30
	15.00	1.20	1.00		–	14–DB25	–	4–DB12@0.15	4–DB12@0.30		–	14–DB25	–	4–DB12@0.15	4–DB12@0.30
15.00 M. SEISMIC LEVEL 2	13.00	1.20	1.00		–	11–DB25	–	4–DB12@0.15	4–DB12@0.30		–	11–DB25	–	4–DB12@0.15	4–DB12@0.30
	14.00	1.20	1.00		–	13–DB25	–	4–DB12@0.15	4–DB12@0.30		–	13–DB25	–	4–DB12@0.15	4–DB12@0.30
	15.00	1.20	1.00		–	14–DB25	–	4–DB12@0.15	4–DB12@0.30		–	14–DB25	–	4–DB12@0.15	4–DB12@0.30

1.3 FOUNDATION & PILE

Ln (M.)	W (M.)	PILE SIZING (MM.)	Nc1	Nc2	NO.OF PILE	FOOTING DIMENSION (M.)					BOTTOM REBAR		TOP REBAR	
						FL	FB	FD	f	g	BF1	BF2	TF1	TF2
15.00 M. SEISMIC LEVEL 1	13.00	⊠ 400x400	8	2	16	14.00	2.60	1.20	1.74	1.80	DB25@0.15	DB25@0.20	DB25@0.15	DB20@0.25
	14.00	⊠ 400x400	8	2	16	15.00	2.60	1.20	1.89	1.80	DB25@0.14	DB25@0.20	DB25@0.14	DB20@0.25
	15.00	⊠ 400x400	9	2	18	16.00	2.60	1.20	1.78	1.80	DB25@0.13	DB25@0.20	DB25@0.13	DB20@0.25
15.00 M. SEISMIC LEVEL 2	13.00	⊠ 400x400	8	2	16	14.00	2.60	1.20	1.74	1.80	DB25@0.14	DB25@0.20	DB25@0.14	DB20@0.25
	14.00	⊠ 400x400	8	2	16	15.00	2.60	1.20	1.89	1.80	DB25@0.13	DB25@0.20	DB25@0.13	DB20@0.25
	15.00	⊠ 400x400	9	2	18	16.00	2.60	1.20	1.78	1.80	DB25@0.12	DB25@0.20	DB25@0.12	DB20@0.25

2.SPAN 20.00 M., HEIGHT ≤ 15.00 M.

2.1 DIMENSION OF SUBSTRUCTURE & REBAR OF COLUMN

Ln (M.)	W (M.)	NO.OF BOXBEAM (N_B)	DIMENSION (M.)							C		REBAR COLUMN					
			A	B	E	S	S1	S2	S3	STRAIGHT	CURVED	D (M.)	CR1	CR2	ST3	CR3	ST4
20.00 M. SEISMIC LEVEL 1	13.00	14	14.00	5.10	1.90	1.00	3.80	1.30	–	1.00	1.00–1.25	1.00	26–DB25	26–DB25	DB12@0.15	26–DB25	DB12@0.30
	14.00	15	15.00	5.30	2.20	1.00	2.40	2.90	1.00	1.00	1.00–1.25	1.00	27–DB25	27–DB25	DB12@0.15	27–DB25	DB12@0.30
	15.00	16	16.00	5.70	2.30	1.00	2.60	3.10	1.00	1.00	1.00–1.25	1.00	28–DB25	28–DB25	DB12@0.15	28–DB25	DB12@0.30
20.00 M. SEISMIC LEVEL 2	13.00	14	14.00	5.10	1.90	1.00	3.80	1.30	–	1.00	1.00–1.25	1.00	33–DB25	33–DB25	DB12@0.15	33–DB25	DB12@0.30
	14.00	15	15.00	5.30	2.20	1.00	2.40	2.90	1.00	1.00	1.00–1.25	1.00	35–DB25	35–DB25	DB12@0.15	35–DB25	DB12@0.30
	15.00	16	16.00	5.70	2.30	1.00	2.60	3.10	1.00	1.00	1.00–1.25	1.00	38–DB25	36–DB25	DB12@0.15	38–DB25	DB12@0.30

2.2 REBAR OF CAP BEAM

Ln (M.)	W (M.)	b	h	SKEW 0–30						SKEW 31–45					
				T1	T2	B1	B2	ST1(STIRRUPS)	ST2(STIRRUPS)	T1	T2	B1	B2	ST1(STIRRUPS)	ST2(STIRRUPS)
20.00 M. SEISMIC LEVEL 1	13.00	1.20	1.00	11–DB25	–	11–DB25	–	4–DB12@0.15	4–DB12@0.30	11–DB25	–	11–DB25	–	4–DB12@0.15	4–DB12@0.30
	14.00	1.20	1.00	13–DB25	–	13–DB25	–	4–DB12@0.15	4–DB12@0.20	13–DB25	–	13–DB25	–	4–DB12@0.15	4–DB12@0.20
	15.00	1.20	1.00	14–DB25	–	14–DB25	–	4–DB12@0.15	4–DB12@0.20	14–DB25	–	14–DB25	–	4–DB12@0.15	4–DB12@0.20
20.00 M. SEISMIC LEVEL 2	13.00	1.20	1.00	13–DB25	–	13–DB25	–	4–DB12@0.15	4–DB12@0.30	13–DB25	–	13–DB25	–	4–DB12@0.15	4–DB12@0.30
	14.00	1.20	1.00	13–DB25	–	13–DB25	–	4–DB12@0.15	4–DB12@0.20	13–DB25	–	13–DB25	–	4–DB12@0.15	4–DB12@0.20
	15.00	1.20	1.00	14–DB25	–	14–DB25	–	4–DB12@0.15	4–DB12@0.20	14–DB25	–	14–DB25	–	4–DB12@0.15	4–DB12@0.20

2.3 FOUNDATION & PILE

Ln (M.)	W (M.)	PILE SIZING (MM.)	Nc1	Nc2	NO.OF PILE	FOOTING DIMENSION (M.)					BOTTOM REBAR		TOP REBAR	
						FL	FB	FD	f	g	BF1	BF2	TF1	TF2
20.00 M. SEISMIC LEVEL 1	13.00	⊠ 400x400	10	2	20	14.00	2.60	1.20	1.36	1.80	DB25@0.15	DB25@0.20	DB25@0.15	DB20@0.25
	14.00	⊠ 400x400	10	2	20	15.00	2.60	1.20	1.47	1.80	DB25@0.14	DB25@0.20	DB25@0.14	DB20@0.25
	15.00	⊠ 400x400	11	2	22	16.00	2.60	1.20	1.42	1.80	DB25@0.13	DB25@0.20	DB25@0.13	DB20@0.25
20.00 M. SEISMIC LEVEL 2	13.00	⊠ 400x400	10	2	20	14.00	2.60	1.20	1.36	1.80	DB25@0.14	DB25@0.20	DB25@0.14	DB20@0.25
	14.00	⊠ 400x400	10	2	20	15.00	2.60	1.20	1.47	1.80	DB25@0.13	DB25@0.20	DB25@0.13	DB20@0.25
	15.00	⊠ 400x400	11	2	22	16.00	2.60	1.20	1.42	1.80	DB25@0.12	DB25@0.20	DB25@0.12	DB20@0.25

NOTES :

1. ALL DIMENSIONS SHOWN ARE IN METERS UNLESS OTHERWISE INDICATED.
2. DESIGN LIVE LOAD : HL–93
3. A MINIMUM ULTIMATE COMPRESSIVE STRENGTH FOR A 150x150x150 MM. CUBE AT 28 DAYS AS FOLLOWS:
   A) FOR ABUTMENT AND WINGWALL 35 MPa. (357 KG/CM^2)
   B) FOR FOOTING 35 MPa. (357 KG/CM^2)
   C) FOR SIDEWALK AND BARRIER 35 MPa. (357 KG/CM^2)
4. REBAR SIZES SMALLER THAN 12 MM. SHALL BE TIS 20 GRADE SR 24 PLAIN ROUND BARS, OTHERS SHALL BE TIS 24 GRADE SD 40 DEFORMED BARS UNLESS OTHERWISE INDICATED.

REV.	REVISION	SIGNATURE	DATE
REV.1	REVISION 1/2018		JAN 2018

KINGDOM OF THAILAND

MINISTRY OF TRANSPORT

DEPARTMENT OF HIGHWAYS

STANDARD DRAWING

THREE COLUMNS PIER WITHOUT SIDEWALK (FOR BOX BEAM)
ROADWAY WIDTH 13.00 – 15.00 M., 15.00 M.
AND 20.00 M. SPAN, HEIGHT ≤ 15.00 M.

DESIGNED : D.O.H. & CONSULTANTS **CHECKED :** BUREAU OF LOCATION & DESIGN **DATE :** MAR 2018

SUBMITTED : (DIRECTOR OF LOCATION & DESIGN BUREAU) **SCALE :** AS SHOWN

APPROVED : (FOR DIRECTOR GENERAL) **DWG NO.** PC–222

SHEET NO. 282/R1

D:\20141103_Term Group\[T 2558\10P2045_STANDARD DRAWING DOH\Standard Drawing DOH_61.02.19\แบบมาตรฐาน(ENG)_Revision 1.2017–JAN2018\ENG\STANDARD FINAL–1–CAD(ENG)\STRUCTURAL WORK\Structural Work–Sec. 1 Bridge Span Not More Than 20.00 M\PC–222(REV01)

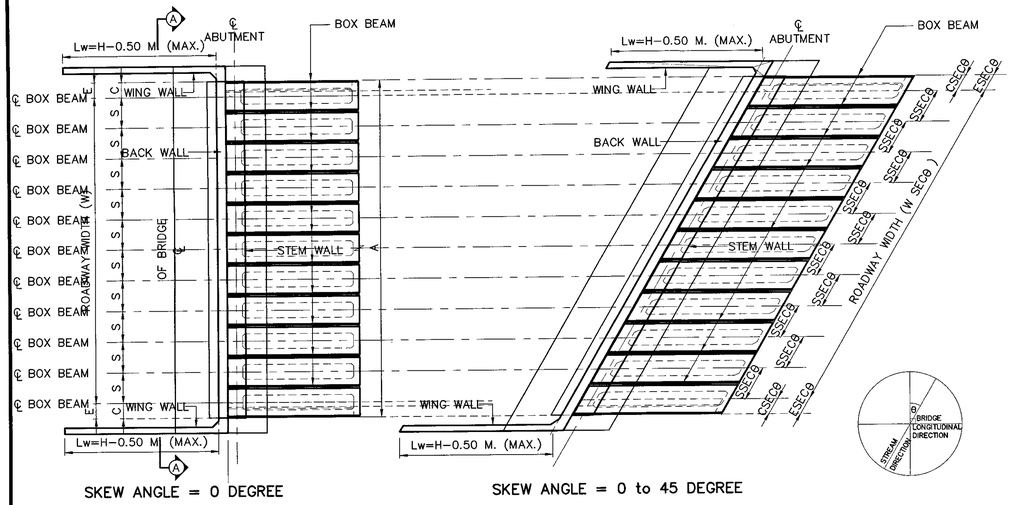

PLAN OF ABUTMENT

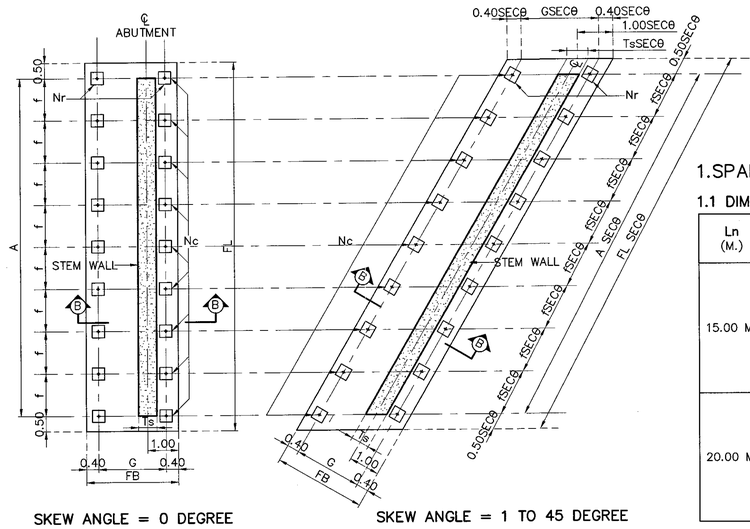

PLAN OF FOOTING

1.SPAN LENGTH 15.00 M. AND 20.00 M.

1.1 DIMENSION OF ABUTMENT

Ln (M.)	W (M.)	NO.OF BOXBEAM (N_B)	H(M.) (MAX)	DIMENSION (M.)						C	
				A	E	S	Hb	Hd	Ts	STRAIGHT	CURVED
15.00 M.	9.00	10	5.50	10.00	0.50	1.00	0.73 *	4.77	0.60	1.00	1.00–1.25
	10.00	11	5.50	11.00	0.50	1.00	0.73 *	4.77	0.60	1.00	1.00–1.25
	11.00	12	5.50	12.00	0.50	1.00	0.73 *	4.77	0.60	1.00	1.00–1.25
	12.00	13	5.50	13.00	0.50	1.00	0.73 *	4.77	0.60	1.00	1.00–1.25
	13.00	14	5.50	14.00	0.50	1.00	0.73 *	4.77	0.60	1.00	1.00–1.25
	14.00	15	5.50	15.00	0.50	1.00	0.73 *	4.77	0.60	1.00	1.00–1.25
	15.00	16	5.50	16.00	0.50	1.00	0.73 *	4.77	0.60	1.00	1.00–1.50
20.00 M.	9.00	10	5.50	10.00	0.50	1.00	0.83 *	4.67	0.60	1.00	1.00–1.50
	10.00	11	5.50	11.00	0.50	1.00	0.83 *	4.67	0.60	1.00	1.00–1.50
	11.00	12	5.50	12.00	0.50	1.00	0.83 *	4.67	0.60	1.00	1.00–1.50
	12.00	13	5.50	13.00	0.50	1.00	0.83 *	4.67	0.60	1.00	1.00–1.50
	13.00	14	5.50	14.00	0.50	1.00	0.83 *	4.67	0.60	1.00	1.00–1.50
	14.00	15	5.50	15.00	0.50	1.00	0.83 *	4.67	0.60	1.00	1.00–1.50
	15.00	16	5.50	16.00	0.50	1.00	0.83 *	4.67	0.60	1.00	1.00–1.50

REMARK ; * = DEPENDS ON DEPTH OF BOXBEAM

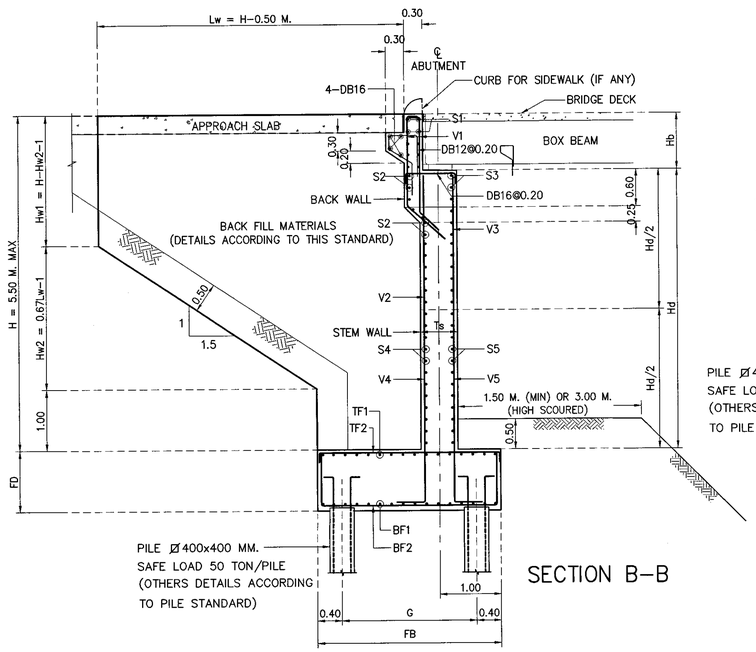

SECTION B–B

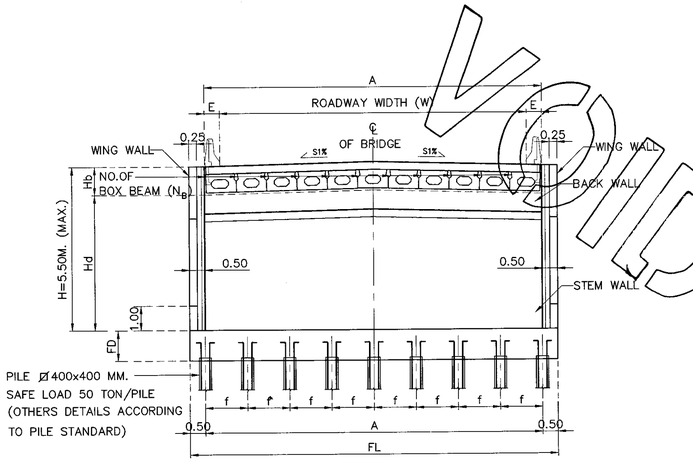

SECTION A–A

1.2 REBAR IN ABUTMENT

Ln (M.)	W (M.)	SKEW 0–45 DEGREE									
		V1	V2	V3	V4	V5	S1	S2	S3	S4	S5
15.00 M.	9.00–15.00	DB20@0.20	DB20@0.20	DB16@0.20	DB20@0.10	DB16@0.20	DB16@0.20	DB16@0.20	DB16@0.20	DB16@0.20	DB16@0.20
20.00 M.	9.00–15.00	DB20@0.20	DB20@0.20	DB16@0.20	DB20@0.10	DB16@0.20	DB16@0.20	DB16@0.20	DB16@0.20	DB16@0.20	DB16@0.20

1.3 FOUNDATION & PILE

Ln (M.)	W (M.)	PILE SIZING (MM.)	Nc	Nr	NO.OF PILE	FOOTING DIMENSION (M.)					BOTTOM REBAR		TOP REBAR	
						FL	FB	FD	f	G	BF1	BF2	TF1	TF2
15.00 M.	9.00	Ø 400x400	10	2	20	11.60	3.50	1.00	1.20	2.70	DB20@0.15	DB25@0.125	DB20@0.30	DB20@0.30
	10.00	Ø 400x400	10	2	20	12.00	3.50	1.00	1.24	2.70	DB20@0.15	DB25@0.125	DB20@0.30	DB20@0.30
	11.00	Ø 400x400	11	2	22	13.00	3.50	1.00	1.22	2.70	DB20@0.15	DB25@0.125	DB20@0.30	DB20@0.30
	12.00	Ø 400x400	12	2	24	14.00	3.50	1.00	1.20	2.70	DB20@0.15	DB25@0.125	DB20@0.30	DB20@0.30
	13.00	Ø 400x400	13	2	26	15.20	3.50	1.00	1.20	2.70	DB20@0.15	DB25@0.125	DB20@0.30	DB20@0.30
	14.00	Ø 400x400	13	2	26	16.00	3.50	1.00	1.27	2.70	DB20@0.15	DB25@0.125	DB20@0.30	DB20@0.30
	15.00	Ø 400x400	14	2	28	17.00	3.50	1.00	1.25	2.70	DB20@0.15	DB25@0.125	DB20@0.30	DB20@0.30
20.00 M.	9.00	Ø 525x525	7	2	14	11.00	3.50	1.00	1.70	2.70	DB20@0.15	DB25@0.12	DB20@0.30	DB20@0.30
	10.00	Ø 525x525	7	2	14	12.00	3.50	1.00	1.87	2.70	DB20@0.15	DB25@0.12	DB20@0.30	DB20@0.30
	11.00	Ø 525x525	8	2	16	13.00	3.50	1.00	1.74	2.70	DB20@0.15	DB25@0.12	DB20@0.30	DB20@0.30
	12.00	Ø 525x525	9	2	18	14.00	3.50	1.00	1.65	2.70	DB20@0.15	DB25@0.12	DB20@0.30	DB20@0.30
	13.00	Ø 525x525	9	2	18	15.00	3.50	1.00	1.78	2.70	DB20@0.15	DB25@0.12	DB20@0.30	DB20@0.30
	14.00	Ø 525x525	10	2	20	16.00	3.50	1.00	1.69	2.70	DB20@0.15	DB25@0.12	DB20@0.30	DB20@0.30
	15.00	Ø 525x525	10	2	20	17.00	3.50	1.00	1.80	2.70	DB20@0.15	DB25@0.12	DB20@0.30	DB20@0.30

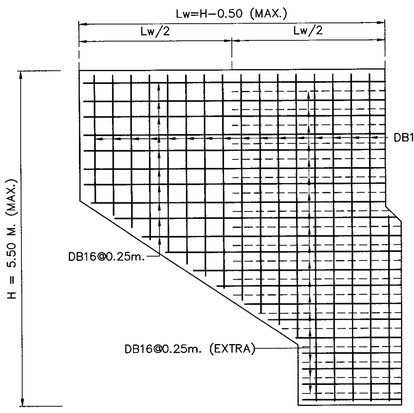

SECTION C–C

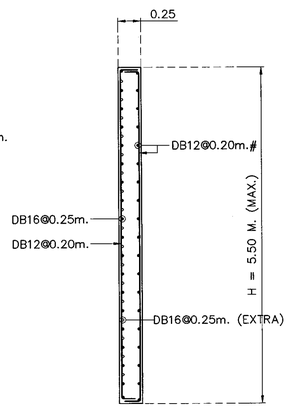

SECTION D–D

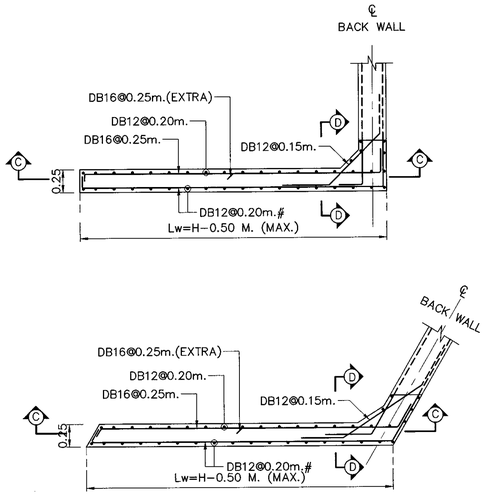

1.4 ADJUST LENGTH FOR SKEW BRIDGE

	VALUE OF SEC θ IN CASE OF SKEW BRIDGE (SKEW, θ)									
SKEW ANGLE, θ (DEGREE)	0	5	10	15	20	25	30	35	40	45
SEC θ	1.0000	1.0038	1.0154	1.0353	1.0642	1.1034	1.1547	1.2208	1.3054	1.4142

NOTE :
1. ALL DIMENSIONS SHOWN ARE IN METERS UNLESS OTHERWISE INDICATED
2. LIVE LOADING : VEHICLE LOAD HL–93
3. A MINIMUM ULTIMATE COMPRESSIVE STRENGTH FOR A 150X150X150 MM. CUBE AT 28 DAYS AS FOLLOWS :
   A) FOR ABUTMENT/WINGWALL 35 MPa
   B) FOR FOOTING 35 MPa
4. REBARS SMALLER THAN RB9 MM. SHALL BE TIS 20 GRADE SR 24 PLAIN ROUND BARS, OTHERS SHALL BE TIS 24 GRADE SD40 DEFORMED BARS UNLESS OTHERWISE INDICATED.

REF.	REVISION	SIGNATURE	DATE

KINGDOM OF THAILAND

MINISTRY OF TRANSPORT

DEPARTMENT OF HIGHWAYS

STANDARD DRAWING

ABUTMENT WITHOUT SIDEWALK (FOR BOX BEAM)
ROADWAY WIDTH 9.00 – 15.00 M., 15.00 M.
AND 20.00 M. SPAN, HEIGHT ≤ 5.50 M.

DESIGNED : D.O.H. & CONSULTANTS	CHECKED : BUREAU OF LOCATION & DESIGN	DATE : OCT 2015
SUBMITTED : (DIRECTOR OF LOCATION & DESIGN BUREAU)		SCALE : AS SHOWN
APPROVED : (FOR DIRECTOR GENERAL)		DWG NO. PC–223
		SHEET NO. 283

D:\std dwg 2015\PC-223(REV00)

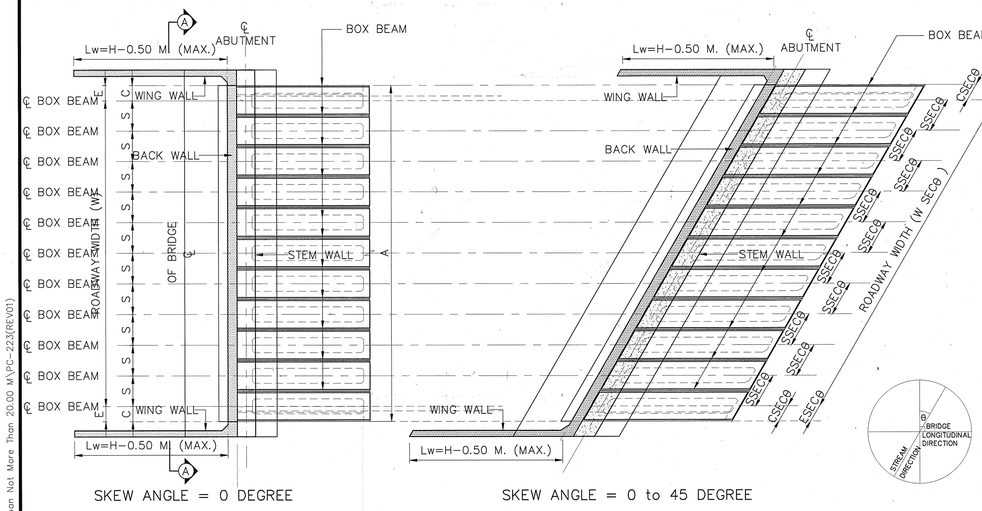

SKEW ANGLE = 0 DEGREE

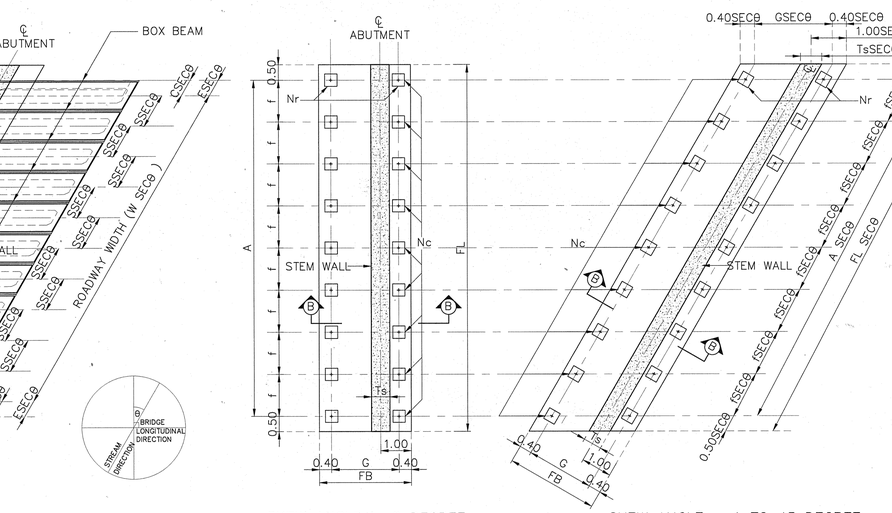

SKEW ANGLE = 0 to 45 DEGREE

PLAN OF ABUTMENT

SKEW ANGLE = 0 DEGREE

SKEW ANGLE = 1 TO 45 DEGREE

PLAN OF FOOTING

1.SPAN LENGTH 15.00 M. AND 20.00 M.

1.1 DIMENSION OF ABUTMENT

Ln (M.)	W (M.)	NO.OF BOXBEAM (N_B)	H(M.) (MAX)	DIMENSION (M.)						C	
				A	E	S	Hb	Hd	Ts	STRAIGHT	CURVED
15.00 M.	9.00	10	5.50	10.00	0.50	1.00	0.73 *	4.77	0.60	1.00	1.00–1.25
	10.00	11	5.50	11.00	0.50	1.00	0.73 *	4.77	0.60	1.00	1.00–1.25
	11.00	12	5.50	12.00	0.50	1.00	0.73 *	4.77	0.60	1.00	1.00–1.25
	12.00	13	5.50	13.00	0.50	1.00	0.73 *	4.77	0.60	1.00	1.00–1.25
	13.00	14	5.50	14.00	0.50	1.00	0.73 *	4.77	0.60	1.00	1.00–1.25
	14.00	15	5.50	15.00	0.50	1.00	0.73 *	4.77	0.60	1.00	1.00–1.25
	15.00	16	5.50	16.00	0.50	1.00	0.73 *	4.77	0.60	1.00	1.00–1.50
20.00 M.	9.00	10	5.50	10.00	0.50	1.00	0.83 *	4.67	0.60	1.00	1.00–1.50
	10.00	11	5.50	11.00	0.50	1.00	0.83 *	4.67	0.60	1.00	1.00–1.50
	11.00	12	5.50	12.00	0.50	1.00	0.83 *	4.67	0.60	1.00	1.00–1.50
	12.00	13	5.50	13.00	0.50	1.00	0.83 *	4.67	0.60	1.00	1.00–1.50
	13.00	14	5.50	14.00	0.50	1.00	0.83 *	4.67	0.60	1.00	1.00–1.50
	14.00	15	5.50	15.00	0.50	1.00	0.83 *	4.67	0.60	1.00	1.00–1.50
	15.00	16	5.50	16.00	0.50	1.00	0.83 *	4.67	0.60	1.00	1.00–1.50

REMARK ; * = DEPENDS ON DEPTH OF BOXBEAM

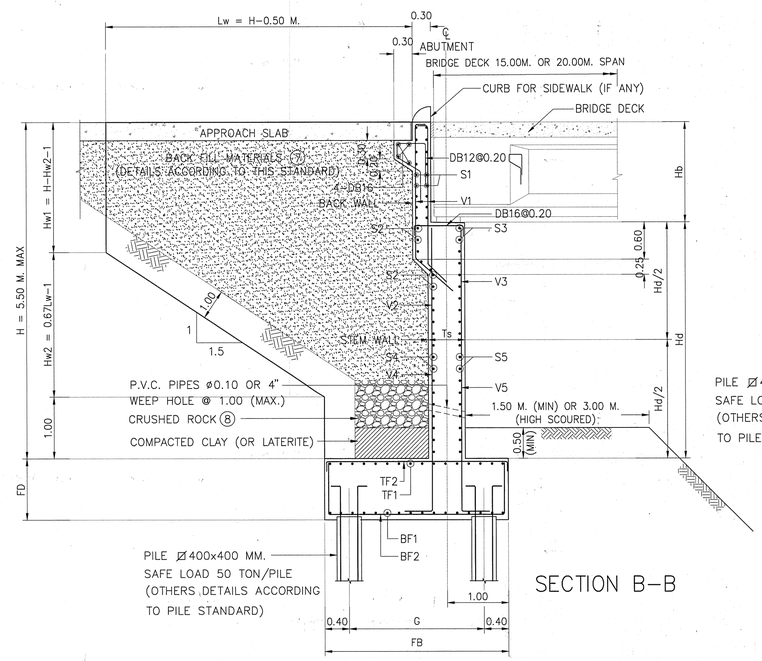

SECTION B–B

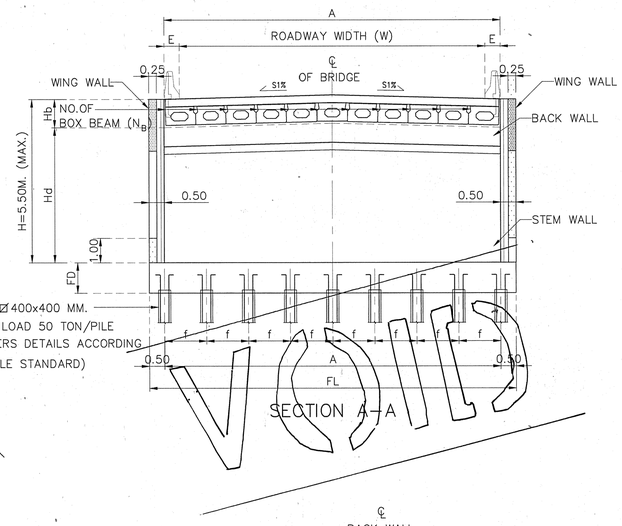

SECTION A–A

1.2 REBAR IN ABUTMENT

Ln (M.)	W (M.)	SKEW 0–45 DEGREE									
		V1	V2	V3	V4	V5	S1	S2	S3	S4	S5
15.00 M.	9.00–15.00	DB20@0.20	DB20@0.20	DB16@0.20	DB20@0.10	DB16@0.20	DB16@0.20	DB16@0.20	DB16@0.20	DB16@0.20	DB16@0.20
20.00 M.	9.00–15.00	DB20@0.20	DB20@0.20	DB16@0.20	DB20@0.10	DB16@0.20	DB16@0.20	DB16@0.20	DB16@0.20	DB16@0.20	DB16@0.20

1.3 FOUNDATION & PILE

Ln (M.)	W (M.)	PILE SIZING (MM.)	Nc	Nr	NO.OF PILE	FOOTING DIMENSION (M.)					BOTTOM REBAR		TOP REBAR	
						FL	FB	FD	f	G	BF1	BF2	TF1	TF2
15.00 M.	9.00	⊠ 400x400	10	2	20	11.60	3.50	1.00	1.20	2.70	DB20@0.15	DB25@0.125	DB20@0.30	DB20@0.30
	10.00	⊠ 400x400	10	2	20	12.00	3.50	1.00	1.24	2.70	DB20@0.15	DB25@0.125	DB20@0.30	DB20@0.30
	11.00	⊠ 400x400	11	2	22	13.00	3.50	1.00	1.22	2.70	DB20@0.15	DB25@0.125	DB20@0.30	DB20@0.30
	12.00	⊠ 400x400	12	2	24	14.00	3.50	1.00	1.20	2.70	DB20@0.15	DB25@0.125	DB20@0.30	DB20@0.30
	13.00	⊠ 400x400	13	2	26	15.20	3.50	1.00	1.20	2.70	DB20@0.15	DB25@0.125	DB20@0.30	DB20@0.30
	14.00	⊠ 400x400	13	2	26	16.00	3.50	1.00	1.27	2.70	DB20@0.15	DB25@0.125	DB20@0.30	DB20@0.30
	15.00	⊠ 400x400	14	2	28	17.00	3.50	1.00	1.25	2.70	DB20@0.15	DB25@0.125	DB20@0.30	DB20@0.30
20.00 M.	9.00	⊠ 525x525	7	2	14	11.00	3.50	1.00	1.70	2.70	DB20@0.15	DB25@0.12	DB20@0.30	DB20@0.30
	10.00	⊠ 525x525	7	2	14	12.00	3.50	1.00	1.87	2.70	DB20@0.15	DB25@0.12	DB20@0.30	DB20@0.30
	11.00	⊠ 525x525	8	2	16	13.00	3.50	1.00	1.74	2.70	DB20@0.15	DB25@0.12	DB20@0.30	DB20@0.30
	12.00	⊠ 525x525	9	2	18	14.00	3.50	1.00	1.65	2.70	DB20@0.15	DB25@0.12	DB20@0.30	DB20@0.30
	13.00	⊠ 525x525	9	2	18	15.00	3.50	1.00	1.78	2.70	DB20@0.15	DB25@0.12	DB20@0.30	DB20@0.30
	14.00	⊠ 525x525	10	2	20	16.00	3.50	1.00	1.69	2.70	DB20@0.15	DB25@0.12	DB20@0.30	DB20@0.30
	15.00	⊠ 525x525	10	2	20	17.00	3.50	1.00	1.80	2.70	DB20@0.15	DB25@0.12	DB20@0.30	DB20@0.30

1.4 ADJUST LENGTH FOR SKEW BRIDGE

	VALUE OF SEC θ IN CASE OF SKEW BRIDGE (SKEW, θ)									
SKEW ANGLE, θ (DEGREE)	0	5	10	15	20	25	30	35	40	45
SEC θ	1.0000	1.0038	1.0154	1.0353	1.0642	1.1034	1.1547	1.2208	1.3054	1.4142

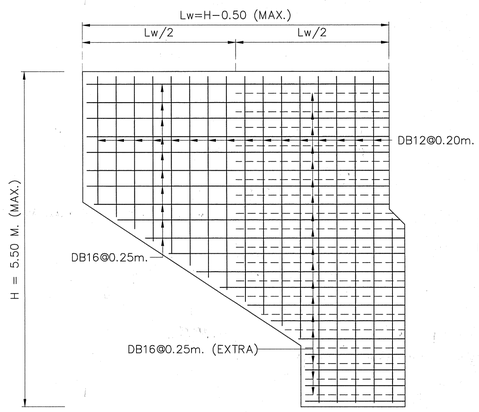

SECTION C–C

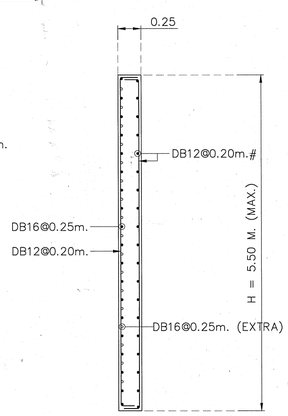

SECTION D–D

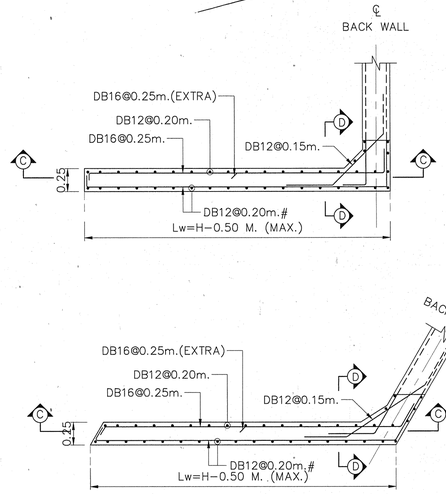

NOTES :

1. ALL DIMENSIONS SHOWN ARE IN METERS UNLESS OTHERWISE INDICATED.
2. DESIGN LIVE LOAD : HL–93
3. A MINIMUM ULTIMATE COMPRESSIVE STRENGTH FOR A 150x150x150 MM. CUBE AT 28 DAYS AS FOLLOWS:
   A) FOR ABUTMENT AND WINGWALL 35 MPa. (357 KG/CM^2)
   B) FOR FOOTING 35 MPa. (357 KG/CM^2)
   C) FOR SIDEWALK AND BARRIER 35 MPa. (357 KG/CM^2)
4. REBAR SIZES SMALLER THAN 12 MM. SHALL BE TIS 20 GRADE SR 24 PLAIN ROUND BARS, OTHERS SHALL BE TIS 24 GRADE SD 40 DEFORMED BARS UNLESS OTHERWISE INDICATED.
5. R = 0.50 M. FOR THE BRIDGE WITHOUT SIDEWALK (P = 0.00). FOR THE BRIDGE WITH SIDEWALK OF P = 0.50 AND 1.00, R = 0.50 M. AND 1.00 M., RESPECTIVELY.
6. EACH SPREAD FOOTING SHALL BE LOCATED BELOW TO A DEPTH WHERE SCOUR WILL NOT AFFECT CAPACITY, THE MINIMUM ALLOWABLE BEARING CAPACITY OF 0.30 MPa (30 TON/M^2)
7. POROUS BACKFILL AND CRUSHED ROCK MATERIALS SHALL BE SUBMITTED FOR APPROVAL
8. "1" CRUSHED ROCK OR 1" GRAVEL FILL ALONG THE WALL.

KINGDOM OF THAILAND

MINISTRY OF TRANSPORT

DEPARTMENT OF HIGHWAYS

STANDARD DRAWING

ABUTMENT WITHOUT SIDEWALK (FOR BOX BEAM)
ROADWAY WIDTH 9.00 – 15.00 M., 15.00 M.
AND 20.00 M. SPAN, HEIGHT ≤ 5.50 M.

DESIGNED : D.O.H. & CONSULTANTS	**CHECKED :** BUREAU OF LOCATION & DESIGN		**DATE :** MAR 2018
SUBMITTED : (DIRECTOR OF LOCATION & DESIGN BUREAU)			**SCALE :** AS SHOWN
APPROVED : (FOR DIRECTOR GENERAL)			**DWG NO.** PC–223
			SHEET NO. 283/R1

REV.	REVISION	SIGNATURE	DATE
REV.1	REVISION 1/2018		JAN 2018

D:\20141103_Team Group\โ 2558\10P2045_STANDARD DRAWING DOH\Standard Drawing DOH_61.02.19\แบบมาตรฐาน(ENG)_Revision 1.2017–JAN2018\ENG\STANDARD FINAL–1–CAD(ENG)\STRUCTURAL WORK\Structural Work–Sec. 1 Bridge Span Not More Than 20.00 M\PC–223(REV01)

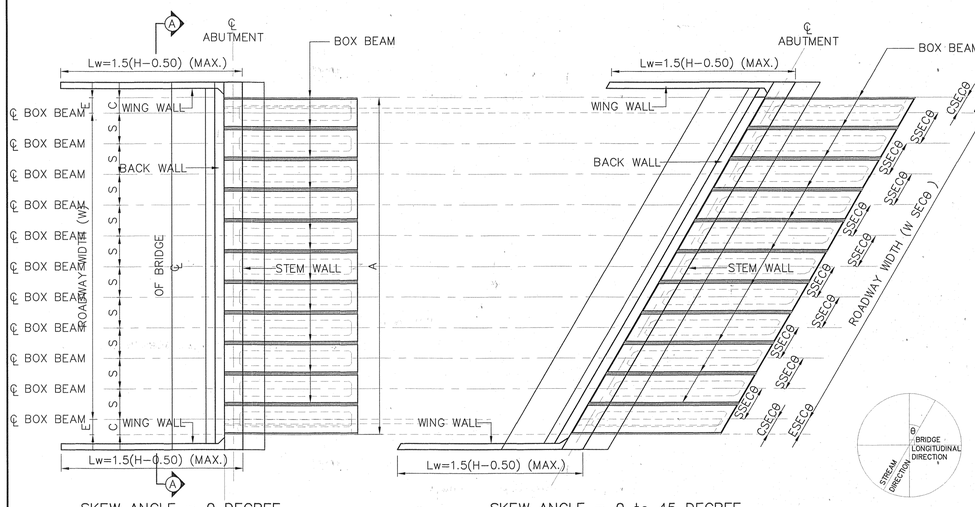

SKEW ANGLE = 0 DEGREE

SKEW ANGLE = 0 to 45 DEGREE

PLAN OF ABUTMENT

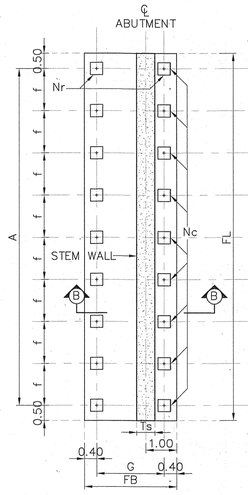

SKEW ANGLE = 0 DEGREE

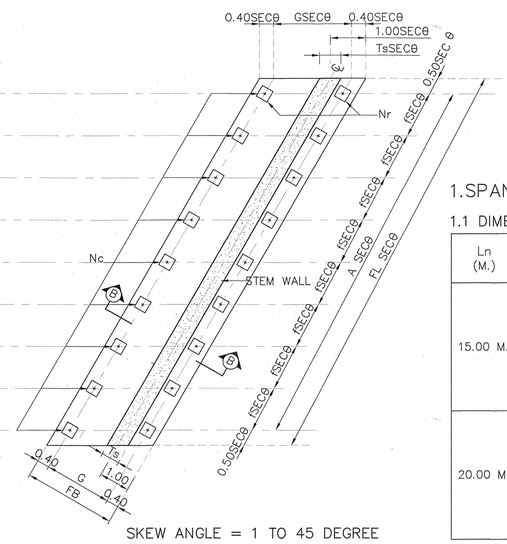

SKEW ANGLE = 1 TO 45 DEGREE

PLAN OF FOOTING

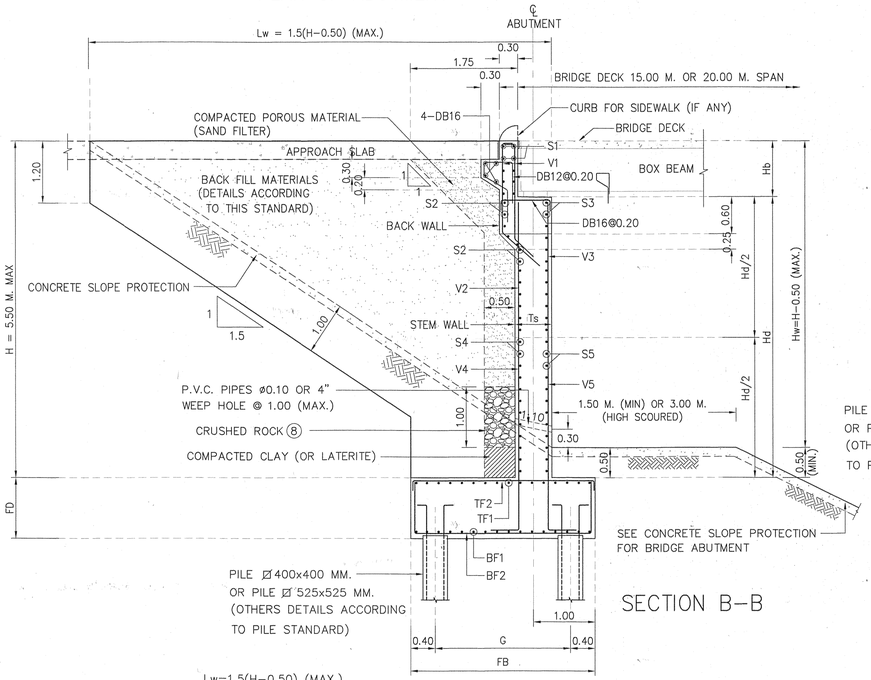

SECTION B-B

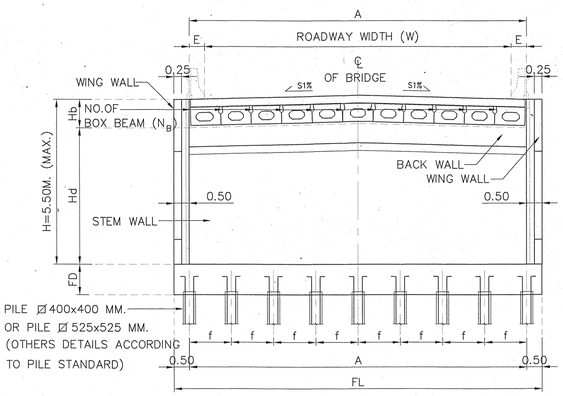

SECTION A-A

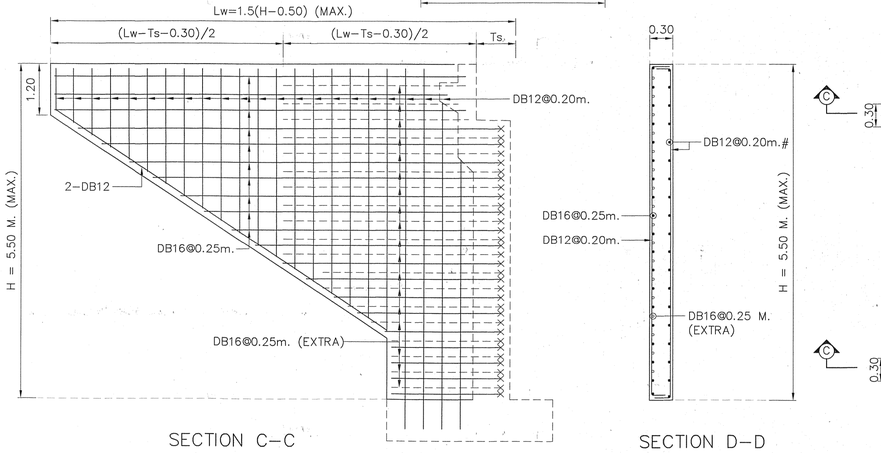

SECTION C-C

SECTION D-D

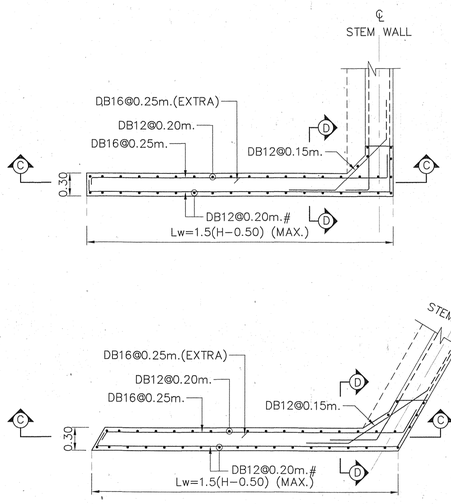

1.SPAN LENGTH 15.00 M. AND 20.00 M.

1.1 DIMENSION OF ABUTMENT

Ln (M.)	W (M.)	NO.OF BOXBEAM (N_B)	H(M.) (MAX)	DIMENSION (M.)						C	
				A	E	S	Hb	Hd	Ts	STRAIGHT	CURVED
15.00 M.	9.00	10	5.50	10.00	0.50	1.00	0.73 *	4.77	0.60	1.00	1.00-1.25
	10.00	11	5.50	11.00	0.50	1.00	0.73 *	4.77	0.60	1.00	1.00-1.25
	11.00	12	5.50	12.00	0.50	1.00	0.73 *	4.77	0.60	1.00	1.00-1.25
	12.00	13	5.50	13.00	0.50	1.00	0.73 *	4.77	0.60	1.00	1.00-1.25
	13.00	14	5.50	14.00	0.50	1.00	0.73 *	4.77	0.60	1.00	1.00-1.25
	14.00	15	5.50	15.00	0.50	1.00	0.73 *	4.77	0.60	1.00	1.00-1.25
	15.00	16	5.50	16.00	0.50	1.00	0.73 *	4.77	0.60	1.00	1.00-1.50
20.00 M.	9.00	10	5.50	10.00	0.50	1.00	0.83 *	4.67	0.60	1.00	1.00-1.50
	10.00	11	5.50	11.00	0.50	1.00	0.83 *	4.67	0.60	1.00	1.00-1.50
	11.00	12	5.50	12.00	0.50	1.00	0.83 *	4.67	0.60	1.00	1.00-1.50
	12.00	13	5.50	13.00	0.50	1.00	0.83 *	4.67	0.60	1.00	1.00-1.50
	13.00	14	5.50	14.00	0.50	1.00	0.83 *	4.67	0.60	1.00	1.00-1.50
	14.00	15	5.50	15.00	0.50	1.00	0.83 *	4.67	0.60	1.00	1.00-1.50
	15.00	16	5.50	16.00	0.50	1.00	0.83 *	4.67	0.60	1.00	1.00-1.50

REMARK ; * = DEPENDS ON DEPTH OF BOXBEAM

1.2 REBAR IN ABUTMENT

Ln (M.)	W (M.)	SKEW 0-45 DEGREE									
		V1	V2	V3	V4	V5	S1	S2	S3	S4	S5
15.00 M.	9.00-15.00	DB20@0.20	DB20@0.20	DB16@0.20	DB20@0.10	DB16@0.20	DB16@0.20	DB16@0.20	DB16@0.20	DB16@0.20	DB16@0.20
20.00 M.	9.00-15.00	DB20@0.20	DB20@0.20	DB16@0.20	DB20@0.10	DB16@0.20	DB16@0.20	DB16@0.20	DB16@0.20	DB16@0.20	DB16@0.20

1.3 FOUNDATION & PILE

Ln (M.)	W (M.)	PILE SIZING (MM.)	Nc	Nr	NO.OF PILE	FOOTING DIMENSION (M.)					BOTTOM REBAR		TOP REBAR	
						FL	FB	FD	f	G	BF1	BF2	TF1	TF2
15.00 M.	9.00	⊠ 400x400	10	2	20	11.60	3.50	1.00	1.20	2.70	DB20@0.15	DB25@0.125	DB20@0.30	DB20@0.30
	10.00	⊠ 400x400	10	2	20	12.00	3.50	1.00	1.24	2.70	DB20@0.15	DB25@0.125	DB20@0.30	DB20@0.30
	11.00	⊠ 400x400	11	2	22	13.00	3.50	1.00	1.22	2.70	DB20@0.15	DB25@0.125	DB20@0.30	DB20@0.30
	12.00	⊠ 400x400	12	2	24	14.00	3.50	1.00	1.20	2.70	DB20@0.15	DB25@0.125	DB20@0.30	DB20@0.30
	13.00	⊠ 400x400	13	2	26	15.20	3.50	1.00	1.20	2.70	DB20@0.15	DB25@0.125	DB20@0.30	DB20@0.30
	14.00	⊠ 400x400	13	2	26	16.00	3.50	1.00	1.27	2.70	DB20@0.15	DB25@0.125	DB20@0.30	DB20@0.30
	15.00	⊠ 400x400	14	2	28	17.00	3.50	1.00	1.25	2.70	DB20@0.15	DB25@0.125	DB20@0.30	DB20@0.30
20.00 M.	9.00	⊠ 525x525	7	2	14	11.00	3.50	1.00	1.70	2.70	DB20@0.15	DB25@0.12	DB20@0.30	DB20@0.30
	10.00	⊠ 525x525	7	2	14	12.00	3.50	1.00	1.87	2.70	DB20@0.15	DB25@0.12	DB20@0.30	DB20@0.30
	11.00	⊠ 525x525	8	2	16	13.00	3.50	1.00	1.74	2.70	DB20@0.15	DB25@0.12	DB20@0.30	DB20@0.30
	12.00	⊠ 525x525	9	2	18	14.00	3.50	1.00	1.65	2.70	DB20@0.15	DB25@0.12	DB20@0.30	DB20@0.30
	13.00	⊠ 525x525	9	2	18	15.00	3.50	1.00	1.78	2.70	DB20@0.15	DB25@0.12	DB20@0.30	DB20@0.30
	14.00	⊠ 525x525	10	2	20	16.00	3.50	1.00	1.69	2.70	DB20@0.15	DB25@0.12	DB20@0.30	DB20@0.30
	15.00	⊠ 525x525	10	2	20	17.00	3.50	1.00	1.80	2.70	DB20@0.15	DB25@0.12	DB20@0.30	DB20@0.30

1.4 ADJUST LENGTH FOR SKEW BRIDGE

VALUE OF SEC θ IN CASE OF SKEW BRIDGE (SKEW, θ)										
SKEW ANGLE, θ (DEGREE)	0	5	10	15	20	25	30	35	40	45
SEC θ	1.0000	1.0038	1.0154	1.0353	1.0642	1.1034	1.1547	1.2208	1.3054	1.4142

NOTES :

1. ALL DIMENSIONS SHOWN ARE IN METERS UNLESS OTHERWISE INDICATED.
2. DESIGN LIVE LOAD : HL-93
3. A MINIMUM ULTIMATE COMPRESSIVE STRENGTH FOR A 150x150x150 MM. CUBE AT 28 DAYS AS FOLLOWS:
   A) FOR ABUTMENT AND WINGWALL 35 MPa. (357 KG/CM^2)
   B) FOR FOOTING 35 MPa. (357 KG/CM^2)
   C) FOR SIDEWALK AND BARRIER 35 MPa. (357 KG/CM^2)
4. REBAR SIZES SMALLER THAN 12 MM. SHALL BE TIS 20 GRADE SR 24 PLAIN ROUND BARS, OTHERS SHALL BE TIS 24 GRADE SD 40 DEFORMED BARS UNLESS OTHERWISE INDICATED.
5. R = 0.50 M. FOR THE BRIDGE WITHOUT SIDEWALK (P = 0.00). FOR THE BRIDGE WITH SIDEWALK OF P = 0.50 AND 1.00, R = 0.50 M. AND 1.00 M., RESPECTIVELY.
6. EACH SPREAD FOOTING SHALL BE LOCATED BELOW TO A DEPTH WHERE SCOUR WILL NOT AFFECT CAPACITY, THE MINIMUM ALLOWABLE BEARING CAPACITY OF 0.30 MPa (30 TON/M^2)
7. POROUS BACKFILL AND CRUSHED ROCK MATERIALS SHALL BE SUBMITTED FOR APPROVAL
8. 1" CRUSHED ROCK OR 1" GRAVEL FILL ALONG THE WALL.

REV.	REVISION	SIGNATURE	DATE
REV.2	REVISION 2/2019		DEC 2019
REV.1	REVISION 1/2018		JAN 2018

KINGDOM OF THAILAND

MINISTRY OF TRANSPORT

DEPARTMENT OF HIGHWAYS

STANDARD DRAWING

ABUTMENT WITHOUT SIDEWALK (FOR BOX BEAM)
ROADWAY WIDTH 9.00 - 15.00 M., 15.00 M.
AND 20.00 M. SPAN, HEIGHT ≤ 5.50 M.

DESIGNED : D.O.H. & CONSULTANTS **CHECKED :** BUREAU OF LOCATION & DESIGN **DATE :** OCT 2015

SUBMITTED : (DIRECTOR OF LOCATION & DESIGN BUREAU) **SCALE :** AS SHOWN

APPROVED : (FOR DIRECTOR GENERAL) **DWG NO.** PC-223

SHEET NO. 283/R2

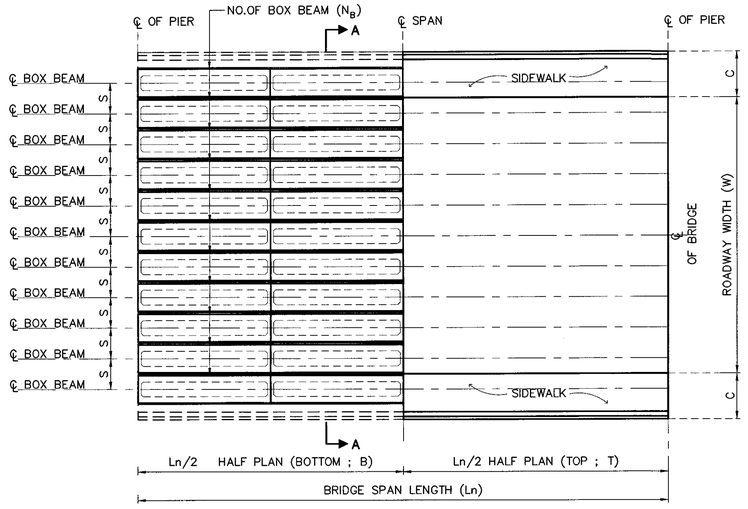

PLAN OF BRIDGE DECK

NOTE :
1. ALL DIMENSIONS SHOWN ARE IN METERS UNLESS OTHERWISE INDICATED
2. LIVE LOADING : VEHICLE LOAD HL-93
3. A MINIMUM ULTIMATE COMPRESSIVE STRENGTH FOR A 150X150X150 MM. CUBE AT 28 DAYS AS FOLLOWS :
   A) FOR COLUMN AND CAP BEAM 35 MPa
   B) FOR FOOTING 35 MPa
4. REBARS SMALLER THAN RB9 MM. SHALL BE TIS 20 GRADE SR 24 PLAIN ROUND BARS, OTHERS SHALL BE TIS 24 GRADE SD50 DEFORMED BARS UNLESS OTHERWISE INDICATED.

1.SPAN LENGTH 15.00 M., 8.00 M. < HEIGHT ≤ 15.00 M.

Ln (M.)	W (M.)	NO.OF BOXBEAM (N_B)	DIMENSION (M.)								C (SIDE WALK WIDTH)		REBAR COLUMN					
			A1	A2	A3	b	e	S	h1	h2	SW=1.00 M.	SW=1.50 M.	Dx1.5D(M.)	CR1	CR2	ST3	CR3	ST4
15.00 M. SEISMIC LEVEL 1	9.00	11	11.00	1.40	1.80	1.60	1.45	1.80	1.00	1.50	1.00	1.50	1.30x1.95	66-DB28	–	DB12@0.15	38-DB28	DB12@0.30
	10.00	12	12.00	1.50	2.00	1.60	1.45	2.00	1.00	1.50	1.00	1.50	1.30x1.95	66-DB28	–	DB12@0.15	38-DB28	DB12@0.30
	11.00	13	13.00	1.60	2.20	1.60	1.45	1.83	1.00	1.50	1.00	1.50	1.30x1.95	72-DB28	–	DB12@0.15	38-DB28	DB12@0.30
	12.00	14	14.00	1.70	2.30	1.80	1.60	2.00	1.00	1.70	1.00	1.50	1.40x2.10	66-DB28	–	DB12@0.15	44-DB28	DB12@0.30
	13.00	15	15.00	1.80	2.50	1.80	1.60	1.86	1.00	1.70	1.00	1.50	1.40x2.10	66-DB28	–	DB12@0.15	44-DB28	DB12@0.30
	14.00	16	16.00	2.00	2.70	1.80	1.60	2.00	1.00	1.70	1.00	1.50	1.40x2.10	66-DB28	–	DB12@0.15	44-DB28	DB12@0.30
	15.00	16	16.00	2.00	2.70	1.80	1.60	2.00	1.00	1.70	1.00	–	1.40x2.10	66-DB28	–	DB12@0.15	44-DB28	DB12@0.30
15.00 M. SEISMIC LEVEL 2	9.00	11	11.00	1.40	1.80	1.60	1.45	1.80	1.00	1.50	1.00	1.50	1.30x1.95	72-DB28	–	DB12@0.15	38-DB28	DB12@0.30
	10.00	12	12.00	1.50	2.00	1.60	1.45	2.00	1.00	1.50	1.00	1.50	1.30x1.95	39-DB28	39-DB28	DB12@0.15	39-DB28	DB12@0.30
	11.00	13	13.00	1.60	2.20	1.60	1.45	1.83	1.00	1.50	1.00	1.50	1.30x1.95	46-DB28	46-DB28	DB12@0.15	38-DB28	DB12@0.30
	12.00	14	14.00	1.70	2.30	1.80	1.60	2.00	1.00	1.70	1.00	1.50	1.40x2.10	47-DB28	47-DB28	DB12@0.15	47-DB28	DB12@0.30
	13.00	15	15.00	1.80	2.50	1.80	1.60	1.86	1.00	1.70	1.00	1.50	1.40x2.10	48-DB28	48-DB28	DB12@0.15	48-DB28	DB12@0.30
	14.00	16	16.00	2.00	2.70	1.80	1.60	2.00	1.00	1.70	1.00	1.50	1.40x2.10	51-DB28	51-DB28	DB12@0.15	51-DB28	DB12@0.30
	15.00	16	16.00	2.00	2.70	1.80	1.60	2.00	1.00	1.70	1.00	–	1.40x2.10	51-DB28	51-DB28	DB12@0.15	51-DB28	DB12@0.30

Ln (M.)	W (M.)	REBAR CAP BEAM						PILE SIZING, PS (MM.)	Nc1	Nc2	NO.OF PILE	FOOTING SKEW 0-15					FOOTING SKEW 16-45				
		T1	T2	T3	B1	ST1(STIRRUPS)	ST2(STIRRUPS)					FL	FB	FD	f	g	FL	FB	FD	f	g
15.00 M. SEISMIC LEVEL 1	9.00	15-DB28	15-DB28	–	10-DB20	3-DB12@0.20	4-DB12@0.15	Ø 650x650	6	2	12	11.00	3.25	1.85	1.92	1.95	11.00	3.75	1.85	1.92	2.45
	10.00	18-DB28	18-DB28	–	10-DB20	3-DB12@0.20	4-DB12@0.15	Ø 650x650	6	2	12	12.00	3.25	2.00	2.12	1.95	12.00	3.75	2.00	2.12	2.45
	11.00	14-DB28	14-DB28	14-DB28	10-DB20	3-DB12@0.20	4-DB12@0.15	Ø 650x650	7	2	14	13.00	3.25	2.00	1.93	1.95	13.00	3.75	2.00	1.93	2.45
	12.00	15-DB28	15-DB28	15-DB28	10-DB20	3-DB12@0.20	4-DB12@0.15	Ø 650x650	7	2	14	14.00	3.25	2.20	2.10	1.95	14.00	3.75	2.20	2.10	2.45
	13.00	16-DB28	16-DB28	16-DB28	12-DB20	3-DB12@0.20	4-DB12@0.15	Ø 650x650	7	2	14	15.00	3.25	2.30	2.27	1.95	15.00	3.75	2.30	2.27	2.45
	14.00	18-DB28	18-DB28	18-DB28	12-DB20	3-DB12@0.20	4-DB12@0.125	Ø 650x650	8	2	16	16.00	3.25	2.30	2.09	1.95	16.00	3.75	2.30	2.09	2.45
	15.00	18-DB28	18-DB28	18-DB28	12-DB20	3-DB12@0.20	4-DB12@0.125	Ø 650x650	8	2	16	16.00	3.25	2.25	2.09	1.95	16.00	3.75	2.25	2.09	2.45
15.00 M. SEISMIC LEVEL 2	9.00	15-DB28	15-DB28	–	10-DB20	3-DB12@0.20	4-DB12@0.15	Ø 650x650	6	2	12	11.00	3.25	1.85	1.92	1.95	11.00	3.75	1.85	1.92	2.45
	10.00	18-DB28	18-DB28	–	10-DB20	3-DB12@0.20	4-DB12@0.15	Ø 650x650	6	2	12	12.00	3.25	2.00	2.12	1.95	12.00	3.75	2.00	2.12	2.45
	11.00	14-DB28	14-DB28	14-DB28	10-DB20	3-DB12@0.20	4-DB12@0.15	Ø 650x650	7	2	14	13.00	3.25	2.00	1.93	1.95	13.00	3.75	2.00	1.93	2.45
	12.00	15-DB28	15-DB28	15-DB28	10-DB20	3-DB12@0.20	4-DB12@0.15	Ø 650x650	7	2	14	14.00	3.25	2.20	2.10	1.95	14.00	3.75	2.20	2.10	2.45
	13.00	16-DB28	16-DB28	16-DB28	12-DB20	3-DB12@0.20	4-DB12@0.15	Ø 650x650	7	2	14	15.00	3.25	2.30	2.27	1.95	15.00	3.75	2.30	2.27	2.45
	14.00	18-DB28	18-DB28	18-DB28	12-DB20	3-DB12@0.20	4-DB12@0.125	Ø 650x650	8	2	16	16.00	3.25	2.30	2.09	1.95	16.00	3.75	2.30	2.09	2.45
	15.00	18-DB28	18-DB28	18-DB28	12-DB20	3-DB12@0.20	4-DB12@0.125	Ø 650x650	8	2	16	16.00	3.25	2.30	2.09	1.95	16.00	3.75	2.30	2.09	2.45

Ln (M.)	W (M.)	BOTTOM REBAR		TOP REBAR	
		BF1	BF2	TF1	TF2
15.00 M. SEISMIC LEVEL 1	9.00	DB28@0.11 **	DB25@0.14	DB20@0.18	DB20@0.18
	10.00	DB28@0.10 **	DB25@0.14	DB20@0.18	DB20@0.18
	11.00	DB28@0.08 **	DB25@0.13	DB20@0.16	DB20@0.17
	12.00	DB28@0.07 **	DB25@0.13	DB20@0.16	DB20@0.17
	13.00	DB28@0.07 **	DB25@0.13	DB20@0.16	DB20@0.17
	14.00	DB28@0.07 **	DB25@0.12	DB20@0.16	DB20@0.17
	15.00	DB28@0.07 **	DB25@0.12	DB20@0.16	DB20@0.17
15.00 M. SEISMIC LEVEL 2	9.00	DB28@0.11 **	DB25@0.14	DB20@0.18	DB20@0.18
	10.00	DB28@0.10 **	DB25@0.14	DB20@0.18	DB20@0.18
	11.00	DB28@0.08 **	DB25@0.13	DB20@0.16	DB20@0.17
	12.00	DB28@0.07 **	DB25@0.13	DB20@0.16	DB20@0.17
	13.00	DB32@0.08 **	DB25@0.13	DB20@0.16	DB20@0.17
	14.00	DB32@0.08 **	DB25@0.12	DB20@0.14	DB20@0.15
	15.00	DB32@0.08 **	DB25@0.12	DB20@0.14	DB20@0.15

REMARK ; ** = 2 LAYERS

ADJUST LENGTH FOR SKEW BRIDGE

VALUE OF SEC θ IN CASE OF SKEW BRIDGE (SKEW, θ)					
SKEW ANGLE, θ (DEGREE)	0	5	10	15	20
SEC θ	1.0000	1.0038	1.0154	1.0353	1.0642
SKEW ANGLE, θ (DEGREE)	25	30	35	40	45
SEC θ	1.1034	1.1547	1.2208	1.3054	1.4142

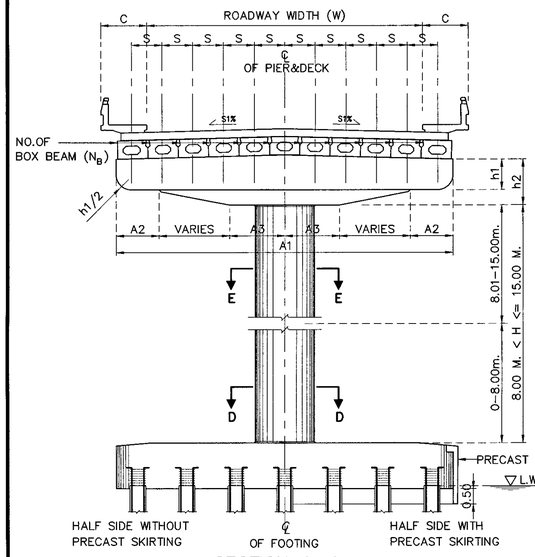

SECTION A-A

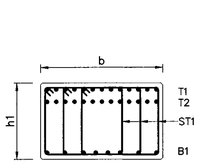

SECTION B-B

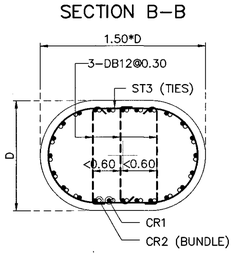

SECTION D-D

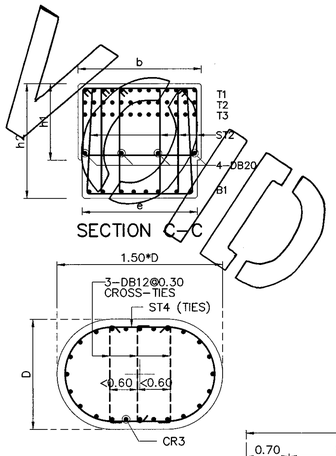

SECTION C-C

SECTION E-E

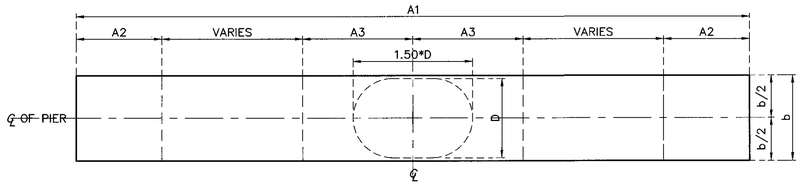

PLAN OF CAP

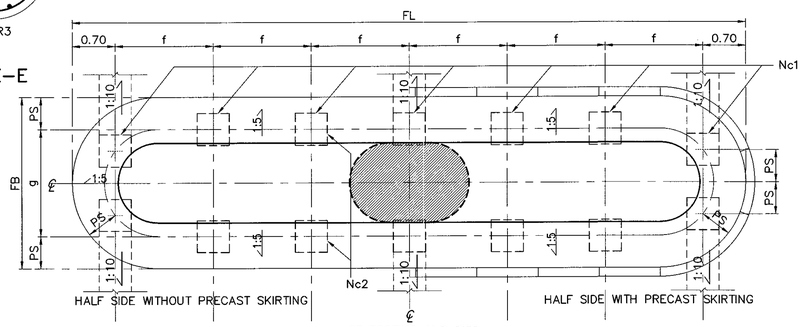

PLAN OF FOOTING

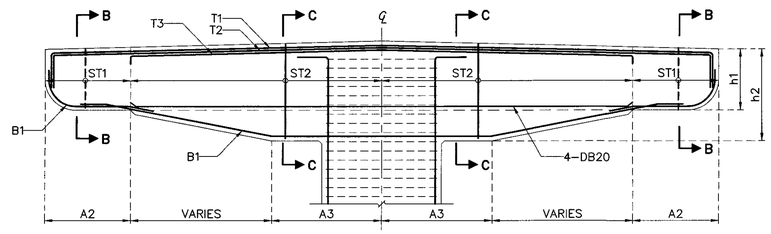

SECTION OF CAP

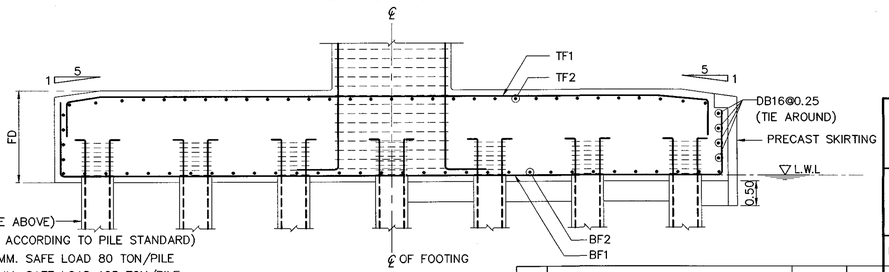

PILE (FROM TABLE ABOVE)
(OTHERS DETAILS ACCORDING TO PILE STANDARD)
PILE Ø 525x525 MM. SAFE LOAD 80 TON/PILE
PILE Ø 650x650 MM. SAFE LOAD 125 TON/PILE

SECTION OF FOOTING

REF.	REVISION	SIGNATURE	DATE

KINGDOM OF THAILAND

MINISTRY OF TRANSPORT
DEPARTMENT OF HIGHWAYS

STANDARD DRAWING

SINGLE COLUMN PIER WITH SIDEWALK (FOR BOX BEAM)
ROADWAY WIDTH 9.00 – 15.00 M., 15.00 M. SPAN,
8.00 M. < HEIGHT ≤ 15.00 M.

DESIGNED : D.O.H. & CONSULTANTS	CHECKED : BUREAU OF LOCATION & DESIGN	DATE : OCT 2015
SUBMITTED : (DIRECTOR OF LOCATION & DESIGN BUREAU)		SCALE : AS SHOWN
APPROVED : (FOR DIRECTOR GENERAL)		DWG NO. PC-224
		SHEET NO. 284

D:\std dwg 2015\PC-224(REV00)

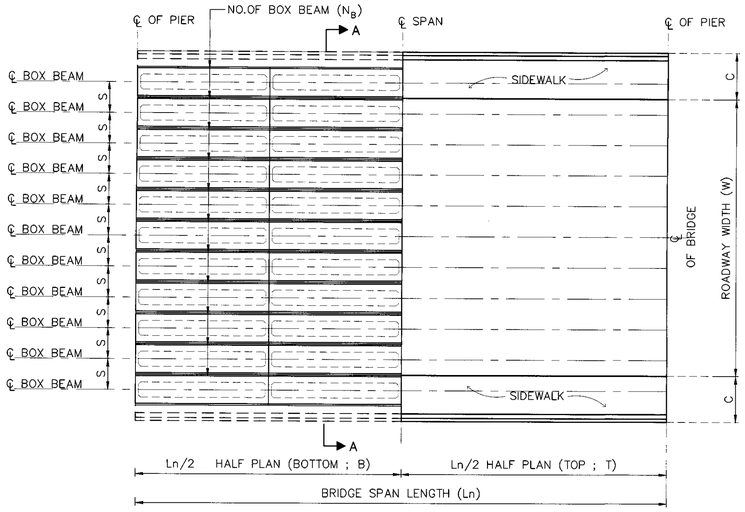

PLAN OF BRIDGE DECK

NOTE :
1. ALL DIMENSIONS SHOWN ARE IN METERS UNLESS OTHERWISE INDICATED
2. LIVE LOADING : VEHICLE LOAD HL-93
3. A MINIMUM ULTIMATE COMPRESSIVE STRENGTH FOR A 150X150X150 MM. CUBE AT 28 DAYS AS FOLLOWS :
   A) FOR COLUMN AND CAP BEAM 35 MPa
   B) FOR FOOTING 35 MPa
4. REBARS SMALLER THAN RB9 MM. SHALL BE TIS 20 GRADE SR 24 PLAIN ROUND BARS, OTHERS SHALL BE TIS 24 GRADE SD50 DEFORMED BARS UNLESS OTHERWISE INDICATED.

1.SPAN LENGTH 15.00 M., 8.00 M. < HEIGHT ≤ 15.00 M.

Ln (M.)	W (M.)	NO.OF BOXBEAM (N_B)	DIMENSION (M.)								C (SIDE WALK WIDTH)		REBAR COLUMN					
			A1	A2	A3	b	e	S	h1	h2	SW=1.00 M.	SW=1.50 M.	Dx1.5D(M.)	CR1	CR2	ST3	CR3	ST4
15.00 M. SEISMIC LEVEL 1	9.00	11	11.00	1.40	1.80	1.60	1.45	1.80	1.00	1.50	1.00	1.50	1.30x1.95	66-DB28	–	DB12@0.15	38-DB28	DB12@0.30
	10.00	12	12.00	1.50	2.00	1.60	1.45	2.00	1.00	1.50	1.00	1.50	1.30x1.95	66-DB28	–	DB12@0.15	38-DB28	DB12@0.30
	11.00	13	13.00	1.60	2.20	1.60	1.45	1.83	1.00	1.50	1.00	1.50	1.30x1.95	72-DB28	–	DB12@0.15	38-DB28	DB12@0.30
	12.00	14	14.00	1.70	2.30	1.80	1.60	2.00	1.00	1.70	1.00	1.50	1.40x2.10	66-DB28	–	DB12@0.15	44-DB28	DB12@0.30
	13.00	15	15.00	1.80	2.50	1.80	1.60	1.86	1.00	1.70	1.00	1.50	1.40x2.10	66-DB28	–	DB12@0.15	44-DB28	DB12@0.30
	14.00	16	16.00	2.00	2.70	1.80	1.60	2.00	1.00	1.70	1.00	1.50	1.40x2.10	66-DB28	–	DB12@0.15	44-DB28	DB12@0.30
	15.00	16	16.00	2.00	2.70	1.80	1.60	2.00	1.00	1.70	1.00	–	1.40x2.10	66-DB28	–	DB12@0.15	44-DB28	DB12@0.30
15.00 M. SEISMIC LEVEL 2	9.00	11	11.00	1.40	1.80	1.60	1.45	1.80	1.00	1.50	1.00	1.50	1.30x1.95	72-DB28	–	DB12@0.15	38-DB28	DB12@0.30
	10.00	12	12.00	1.50	2.00	1.60	1.45	2.00	1.00	1.50	1.00	1.50	1.30x1.95	39-DB28	39-DB28	DB12@0.15	39-DB28	DB12@0.30
	11.00	13	13.00	1.60	2.20	1.60	1.45	1.83	1.00	1.50	1.00	1.50	1.30x1.95	46-DB28	46-DB28	DB12@0.15	46-DB28	DB12@0.30
	12.00	14	14.00	1.70	2.30	1.80	1.60	2.00	1.00	1.70	1.00	1.50	1.40x2.10	47-DB28	47-DB28	DB12@0.15	47-DB28	DB12@0.30
	13.00	15	15.00	1.80	2.50	1.80	1.60	1.86	1.00	1.70	1.00	1.50	1.40x2.10	48-DB28	48-DB28	DB12@0.15	48-DB28	DB12@0.30
	14.00	16	16.00	2.00	2.70	1.80	1.60	2.00	1.00	1.70	1.00	1.50	1.40x2.10	51-DB28	51-DB28	DB12@0.15	51-DB28	DB12@0.30
	15.00	16	16.00	2.00	2.70	1.80	1.60	2.00	1.00	1.70	1.00	–	1.40x2.10	51-DB28	51-DB28	DB12@0.15	51-DB28	DB12@0.30

Ln (M.)	W (M.)	REBAR CAP BEAM						PILE SIZING, PS (MM.)	Nc1	Nc2	NO.OF PILE	FOOTING SKEW 0-15					FOOTING SKEW 16-45				
		T1	T2	T3	B1	ST1(STIRRUPS)	ST2(STIRRUPS)					FL	FB	FD	f	g	FL	FB	FD	f	g
15.00 M. SEISMIC LEVEL 1	9.00	15-DB28	15-DB28	--	10-DB20	3-DB12@0.20	4-DB12@0.15	Ø 650x650	6	2	12	11.00	3.25	1.85	1.92	1.95	11.00	3.75	1.85	1.92	2.45
	10.00	18-DB28	18-DB28	--	10-DB20	3-DB12@0.20	4-DB12@0.15	Ø 650x650	6	2	12	12.00	3.25	2.00	2.12	1.95	12.00	3.75	2.00	2.12	2.45
	11.00	14-DB28	14-DB28	14-DB28	10-DB20	3-DB12@0.20	4-DB12@0.15	Ø 650x650	7	2	14	13.00	3.25	2.00	1.93	1.95	13.00	3.75	2.00	1.93	2.45
	12.00	15-DB28	15-DB28	15-DB28	10-DB20	3-DB12@0.20	4-DB12@0.15	Ø 650x650	7	2	14	14.00	3.25	2.20	2.10	1.95	14.00	3.75	2.20	2.10	2.45
	13.00	16-DB28	16-DB28	16-DB28	12-DB20	3-DB12@0.20	4-DB12@0.15	Ø 650x650	7	2	14	15.00	3.25	2.30	2.27	1.95	15.00	3.75	2.30	2.27	2.45
	14.00	18-DB28	18-DB28	18-DB28	12-DB20	3-DB12@0.20	4-DB12@0.125	Ø 650x650	8	2	16	16.00	3.25	2.30	2.09	1.95	16.00	3.75	2.30	2.09	2.45
	15.00	18-DB28	18-DB28	18-DB28	12-DB20	3-DB12@0.20	4-DB12@0.125	Ø 650x650	8	2	16	16.00	3.25	2.30	2.09	1.95	16.00	3.75	2.30	2.09	2.45
15.00 M. SEISMIC LEVEL 2	9.00	15-DB28	15-DB28	--	10-DB20	3-DB12@0.20	4-DB12@0.15	Ø 650x650	6	2	12	11.00	3.25	1.85	1.92	1.95	11.00	3.75	1.85	1.92	2.45
	10.00	18-DB28	18-DB28	--	10-DB20	3-DB12@0.20	4-DB12@0.15	Ø 650x650	6	2	12	12.00	3.25	2.00	2.12	1.95	12.00	3.75	2.00	2.12	2.45
	11.00	14-DB28	14-DB28	14-DB28	10-DB20	3-DB12@0.20	4-DB12@0.15	Ø 650x650	7	2	14	13.00	3.25	2.00	1.93	1.95	13.00	3.75	2.00	1.93	2.45
	12.00	15-DB28	15-DB28	15-DB28	10-DB20	3-DB12@0.20	4-DB12@0.15	Ø 650x650	7	2	14	14.00	3.25	2.20	2.10	1.95	14.00	3.75	2.20	2.10	2.45
	13.00	16-DB28	16-DB28	16-DB28	12-DB20	3-DB12@0.20	4-DB12@0.15	Ø 650x650	7	2	14	15.00	3.25	2.30	2.27	1.95	15.00	3.75	2.30	2.27	2.45
	14.00	18-DB28	18-DB28	18-DB28	12-DB20	3-DB12@0.20	4-DB12@0.125	Ø 650x650	8	2	16	16.00	3.25	2.30	2.09	1.95	16.00	3.75	2.30	2.09	2.45
	15.00	18-DB28	18-DB28	18-DB28	12-DB20	3-DB12@0.20	4-DB12@0.125	Ø 650x650	8	2	16	16.00	3.25	2.30	2.09	1.95	16.00	3.75	2.30	2.09	2.45

Ln (M.)	W (M.)	BOTTOM REBAR		TOP REBAR	
		BF1	BF2	TF1	TF2
15.00 M. SEISMIC LEVEL 1	9.00	DB28@0.11 **	DB25@0.14	DB20@0.18	DB20@0.18
	10.00	DB28@0.10 **	DB25@0.14	DB20@0.18	DB20@0.18
	11.00	DB28@0.08 **	DB25@0.13	DB20@0.16	DB20@0.17
	12.00	DB28@0.07 **	DB25@0.13	DB20@0.16	DB20@0.17
	13.00	DB28@0.07 **	DB25@0.13	DB20@0.16	DB20@0.17
	14.00	DB28@0.07 **	DB25@0.12	DB20@0.16	DB20@0.17
	15.00	DB28@0.07 **	DB25@0.12	DB20@0.16	DB20@0.17
15.00 M. SEISMIC LEVEL 2	9.00	DB28@0.11 **	DB25@0.14	DB20@0.18	DB20@0.18
	10.00	DB28@0.10 **	DB25@0.14	DB20@0.18	DB20@0.18
	11.00	DB28@0.08 **	DB25@0.13	DB20@0.16	DB20@0.17
	12.00	DB28@0.07 **	DB25@0.13	DB20@0.16	DB20@0.17
	13.00	DB32@0.08 **	DB25@0.13	DB20@0.16	DB20@0.17
	14.00	DB32@0.08 **	DB25@0.12	DB20@0.14	DB20@0.15
	15.00	DB32@0.08 **	DB25@0.12	DB20@0.14	DB20@0.15

REMARK ; ** = 2 LAYERS

ADJUST LENGTH FOR SKEW BRIDGE

VALUE OF SEC θ IN CASE OF SKEW BRIDGE (SKEW, θ)					
SKEW ANGLE, θ (DEGREE)	0	5	10	15	20
SEC θ	1.0000	1.0038	1.0154	1.0353	1.0642
SKEW ANGLE, θ (DEGREE)	25	30	35	40	45
SEC θ	1.1034	1.1547	1.2208	1.3054	1.4142

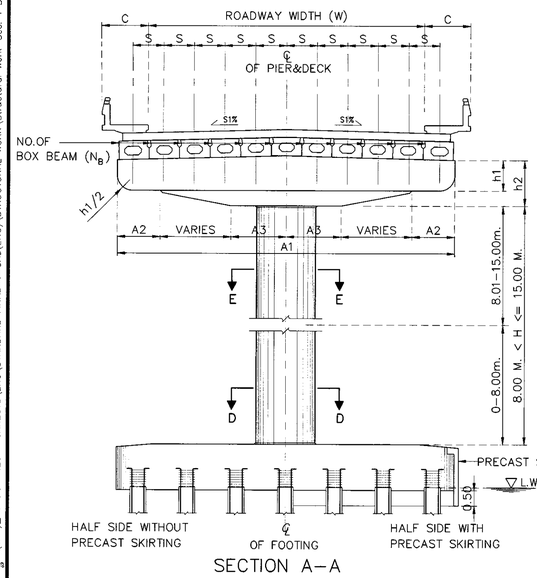

SECTION A-A

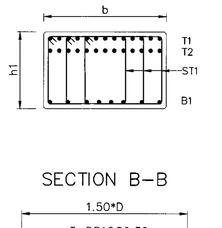

SECTION B-B

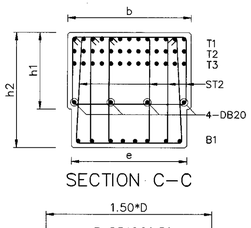

SECTION C-C

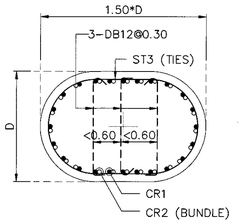

SECTION D-D

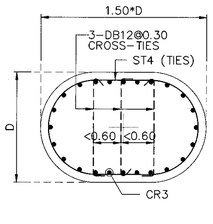

SECTION E-E

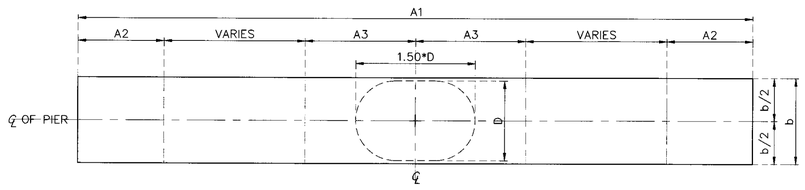

PLAN OF CAP

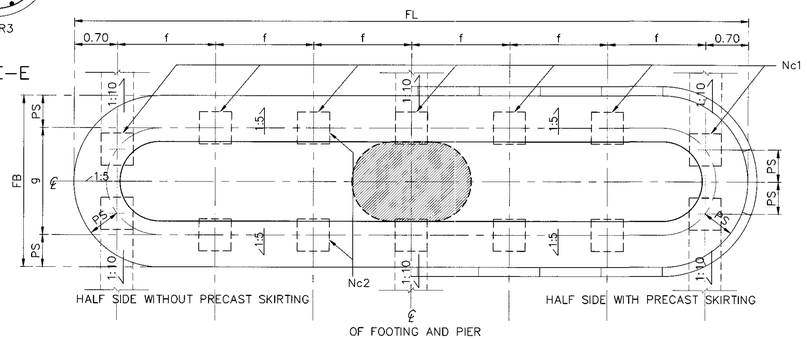

PLAN OF FOOTING

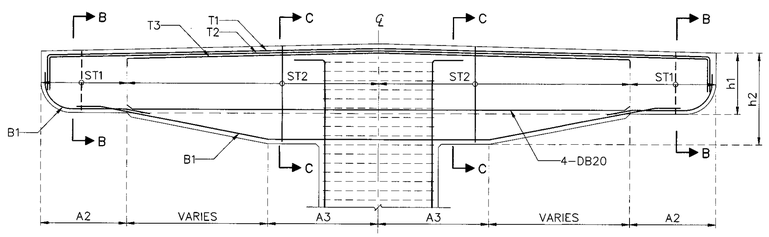

SECTION OF CAP

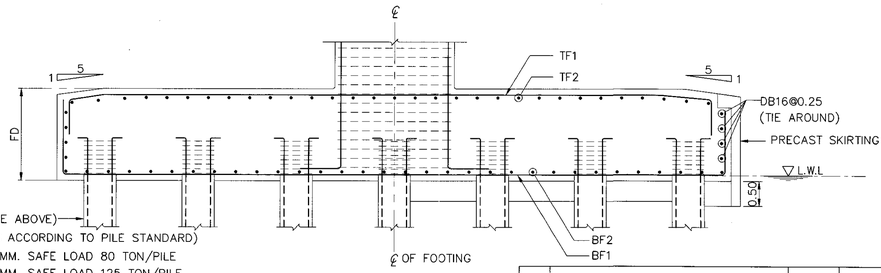

PILE (FROM TABLE ABOVE)
(OTHERS DETAILS ACCORDING TO PILE STANDARD)
PILE Ø 525x525 MM. SAFE LOAD 80 TON/PILE
PILE Ø 650x650 MM. SAFE LOAD 125 TON/PILE

SECTION OF FOOTING

KINGDOM OF THAILAND

MINISTRY OF TRANSPORT
DEPARTMENT OF HIGHWAYS

STANDARD DRAWING

SINGLE COLUMN PIER WITH SIDEWALK (FOR BOX BEAM)
ROADWAY WIDTH 9.00 – 15.00 M., 15.00 M. SPAN,
8.00 M. < HEIGHT ≤ 15.00 M.

DESIGNED : D.O.H. & CONSULTANTS	**CHECKED :** BUREAU OF LOCATION & DESIGN		**DATE :** MAR 2018
SUBMITTED : (DIRECTOR OF LOCATION & DESIGN BUREAU)			**SCALE :** AS SHOWN
APPROVED : (FOR DIRECTOR GENERAL)			**DWG NO.** PC-224
			SHEET NO. 284/R1

REV.	REVISION	SIGNATURE	DATE
REV.1	REVISION 1/2018		JAN 2018

D:\20141103_Team Group\11 2558\10P2045_STANDARD DRAWING DOH\Standard Drawing DOH_61 02 19\61\1\DRAWING\PC(W9)_Revision 1.2017-JAN2018\ENG\STANDARD FINAL-1-CAD(ENG)\STRUCTURAL WORK\Structural Work-Sec. 1 Bridge Span Not More Than 20.00 M\PC-224(REV01)

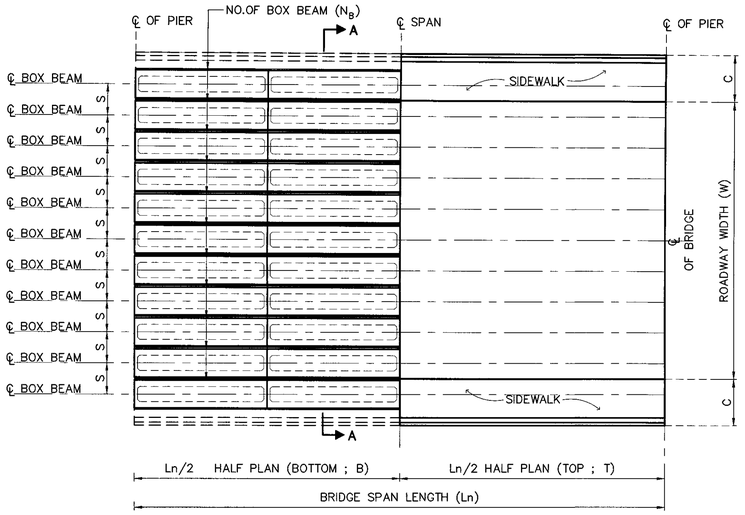

PLAN OF BRIDGE DECK

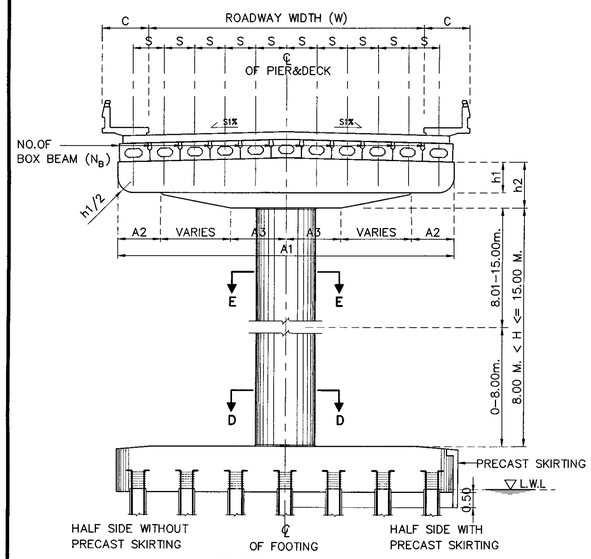

SECTION A-A

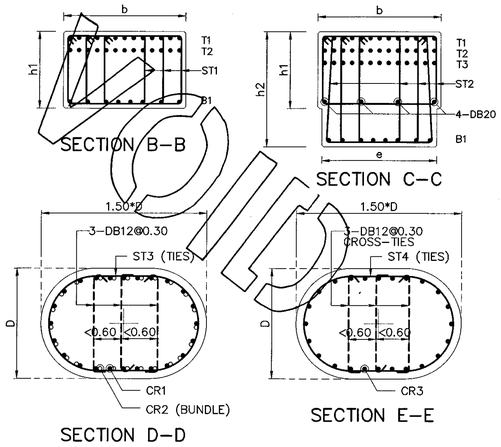

NOTE :
1. ALL DIMENSIONS SHOWN ARE IN METERS UNLESS OTHERWISE INDICATED
2. LIVE LOADING : VEHICLE LOAD HL-93
3. A MINIMUM ULTIMATE COMPRESSIVE STRENGTH FOR A 150X150X150 MM. CUBE AT 28 DAYS AS FOLLOWS :
   A) FOR COLUMN AND CAP BEAM 35 MPa
   B) FOR FOOTING 35 MPa
4. REBARS SMALLER THAN RB9 MM. SHALL BE TIS 20 GRADE SR 24 PLAIN ROUND BARS, OTHERS SHALL BE TIS 24 GRADE SD50 DEFORMED BARS UNLESS OTHERWISE INDICATED.

1.SPAN LENGTH 20.00 M., 8.00 M. < HEIGHT ≤ 15.00 M.

Ln (M.)	W (M.)	NO.OF BOXBEAM (N_B)	DIMENSION (M.)								C (SIDE WALK WIDTH)		REBAR COLUMN					
			A1	A2	A3	b	e	S	h1	h2	SW=1.00 M.	SW=1.50 M.	Dx1.5D(M.)	CR1	CR2	ST3	CR3	ST4
20.00 M. SEISMIC LEVEL 1	9.00	11	11.00	1.40	1.80	1.60	1.45	1.80	1.00	1.50	1.00	1.50	1.30x1.95	54-DB28	–	DB12@0.15	38-DB28	DB12@0.30
	10.00	12	12.00	1.50	2.00	1.60	1.45	2.00	1.00	1.50	1.00	1.50	1.30x1.95	66-DB28	–	DB12@0.15	38-DB28	DB12@0.30
	11.00	13	13.00	1.60	2.20	1.60	1.45	1.83	1.00	1.50	1.00	1.50	1.40x2.10	66-DB28	–	DB12@0.15	44-DB28	DB12@0.30
	12.00	14	14.00	1.70	2.30	1.80	1.60	2.00	1.00	1.70	1.00	1.50	1.50x2.25	50-DB28	–	DB12@0.15	50-DB28	DB12@0.30
	13.00	15	15.00	1.80	2.50	1.80	1.60	1.86	1.00	1.70	1.00	1.50	1.50x2.25	50-DB28	–	DB12@0.15	50-DB28	DB12@0.30
	14.00	16	16.00	2.00	2.70	1.80	1.60	2.00	1.00	1.70	1.00	1.50	1.50x2.25	50-DB28	–	DB12@0.15	50-DB28	DB12@0.30
	15.00	16	16.00	2.00	2.70	1.80	1.60	2.00	1.00	1.70	1.00	–	1.50x2.25	50-DB28	–	DB12@0.15	50-DB28	DB12@0.30
20.00 M. SEISMIC LEVEL 2	9.00	11	11.00	1.40	1.80	1.60	1.45	1.80	1.00	1.50	1.00	1.50	1.30x1.95	48-DB28	48-DB28	DB12@0.15	38-DB28	DB12@0.30
	10.00	12	12.00	1.50	2.00	1.60	1.45	2.00	1.00	1.50	1.00	1.50	1.30x1.95	58-DB28	58-DB28	DB12@0.15	44-DB28	DB12@0.30
	11.00	13	13.00	1.60	2.20	1.60	1.45	1.83	1.00	1.50	1.00	1.50	1.40x2.10	54-DB28	54-DB28	DB12@0.15	44-DB28	DB12@0.30
	12.00	14	14.00	1.70	2.30	1.80	1.60	2.00	1.00	1.70	1.00	1.50	1.50x2.25	50-DB28	50-DB28	DB12@0.15	50-DB28	DB12@0.30
	13.00	15	15.00	1.80	2.50	1.80	1.60	1.86	1.00	1.70	1.00	1.50	1.50x2.25	55-DB28	55-DB28	DB12@0.15	50-DB28	DB12@0.30
	14.00	16	16.00	2.00	2.70	1.80	1.60	2.00	1.00	1.70	1.00	1.50	1.50x2.25	60-DB28	60-DB28	DB12@0.15	50-DB28	DB12@0.30
	15.00	16	16.00	2.00	2.70	1.80	1.60	2.00	1.00	1.70	1.00	–	1.50x2.25	60-DB28	60-DB28	DB12@0.15	50-DB28	DB12@0.30

Ln (M.)	W (M.)	REBAR CAP BEAM						PILE SIZING, PS (MM.)	Nc1	Nc2	NO.OF PILE	FOOTING SKEW 0°-15°					FOOTING SKEW 16°-45°				
		T1	T2	T3	B1	ST1(STIRRUPS)	ST2(STIRRUPS)					FL	FB	FD	f	g	FL	FB	FD	f	g
20.00 M. SEISMIC LEVEL 1	9.00	16-DB28	16-DB28	–	10-DB20	3-DB12@0.20	4-DB12@0.125	Ø 650x650	6	2	12	11.00	3.25	1.85	1.92	1.95	11.00	3.75	1.85	1.92	2.45
	10.00	15-DB28	15-DB28	15-DB28	12-DB20	3-DB12@0.20	4-DB12@0.125	Ø 650x650	7	2	14	12.00	3.25	2.00	1.77	1.95	12.00	3.75	2.00	1.77	2.45
	11.00	17-DB28	17-DB28	17-DB28	12-DB20	3-DB12@0.15	5-DB12@0.125	Ø 650x650	7	2	14	13.00	3.25	2.00	1.93	1.95	13.00	3.75	2.00	1.93	2.45
	12.00	18-DB28	18-DB28	18-DB28	12-DB20	3-DB12@0.15	5-DB12@0.125	Ø 650x650	8	2	16	14.00	3.25	2.20	1.80	1.95	14.00	3.75	2.20	1.80	2.45
	13.00	19-DB28	19-DB28	19-DB28	12-DB20	3-DB12@0.15	5-DB12@0.125	Ø 650x650	8	2	16	15.00	3.25	2.20	1.94	1.95	15.00	3.75	2.20	1.94	2.45
	14.00	22-DB28	22-DB28	22-DB28	12-DB20	3-DB12@0.15	5-DB12@0.125	Ø 650x650	8	2	16	16.00	3.25	2.45	2.09	1.95	16.00	3.75	2.45	2.09	2.45
	15.00	22-DB28	22-DB28	22-DB28	12-DB20	3-DB12@0.15	5-DB12@0.125	Ø 650x650	8	2	16	16.00	3.25	2.45	2.09	1.95	16.00	3.75	2.45	2.09	2.45
20.00 M. SEISMIC LEVEL 2	9.00	16-DB28	16-DB28	–	10-DB20	3-DB12@0.20	4-DB12@0.125	Ø 650x650	6	2	12	11.00	3.25	1.85	1.92	1.95	11.00	3.75	1.85	1.92	2.45
	10.00	15-DB28	15-DB28	15-DB28	12-DB20	3-DB12@0.20	4-DB12@0.125	Ø 650x650	7	2	14	12.00	3.25	2.00	1.77	1.95	12.00	3.75	2.00	1.77	2.45
	11.00	17-DB28	17-DB28	17-DB28	12-DB20	3-DB12@0.15	5-DB12@0.125	Ø 650x650	7	2	14	13.00	3.25	2.00	1.93	1.95	13.00	3.75	2.00	1.93	2.45
	12.00	18-DB28	18-DB28	18-DB28	12-DB20	3-DB12@0.15	5-DB12@0.125	Ø 650x650	8	2	16	14.00	3.25	2.20	1.80	1.95	14.00	3.75	2.20	1.80	2.45
	13.00	19-DB28	19-DB28	19-DB28	12-DB20	3-DB12@0.15	5-DB12@0.125	Ø 650x650	8	2	16	15.00	3.25	2.20	1.94	1.95	15.00	3.75	2.20	1.94	2.45
	14.00	22-DB28	22-DB28	22-DB28	12-DB20	3-DB12@0.15	5-DB12@0.125	Ø 650x650	8	2	16	16.00	3.25	2.45	2.09	1.95	16.00	3.75	2.45	2.09	2.45
	15.00	22-DB28	22-DB28	22-DB28	12-DB20	3-DB12@0.15	5-DB12@0.125	Ø 650x650	8	2	16	16.00	3.25	2.45	2.09	1.95	16.00	3.75	2.45	2.09	2.45

Ln (M.)	W (M.)	BOTTOM REBAR		TOP REBAR	
		BF1	BF2	TF1	TF2
20.00 M. SEISMIC LEVEL 1	9.00	DB28@0.11 **	DB25@0.14	DB20@0.18	DB20@0.18
	10.00	DB28@0.09 **	DB25@0.14	DB20@0.18	DB20@0.18
	11.00	DB32@0.10 **	DB25@0.13	DB20@0.16	DB20@0.17
	12.00	DB32@0.10 **	DB25@0.13	DB20@0.16	DB20@0.17
	13.00	DB32@0.10 **	DB25@0.12	DB20@0.14	DB20@0.15
	14.00	DB32@0.10 **	DB25@0.12	DB20@0.14	DB20@0.15
	15.00	DB32@0.13 **	DB25@0.12	DB20@0.14	DB20@0.15
20.00 M. SEISMIC LEVEL 2	9.00	DB28@0.09 **	DB25@0.14	DB20@0.18	DB20@0.18
	10.00	DB28@0.08 **	DB25@0.14	DB20@0.18	DB20@0.18
	11.00	DB32@0.08 **	DB25@0.13	DB20@0.16	DB20@0.17
	12.00	DB32@0.08 **	DB25@0.13	DB20@0.16	DB20@0.17
	13.00	DB32@0.07 **	DB25@0.12	DB20@0.14	DB20@0.15
	14.00	DB32@0.07 **	DB25@0.12	DB20@0.14	DB20@0.15
	15.00	DB32@0.07 **	DB25@0.12	DB20@0.14	DB20@0.15

REMARK ; ** = 2 LAYERS

ADJUST LENGTH FOR SKEW BRIDGE

VALUE OF SEC θ IN CASE OF SKEW BRIDGE (SKEW, θ)					
SKEW ANGLE, θ (DEGREE)	0	5	10	15	20
SEC θ	1.0000	1.0038	1.0154	1.0353	1.0642
SKEW ANGLE, θ (DEGREE)	25	30	35	40	45
SEC θ	1.1034	1.1547	1.2208	1.3054	1.4142

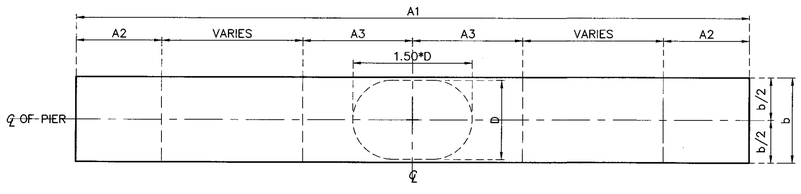

PLAN OF CAP

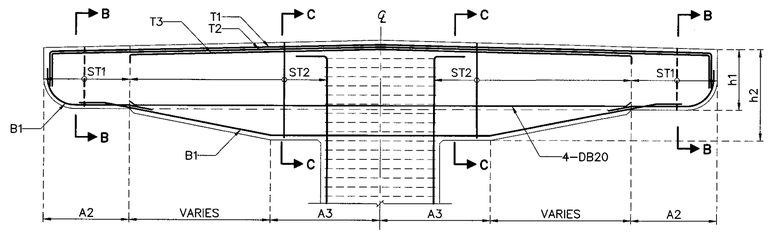

SECTION OF CAP

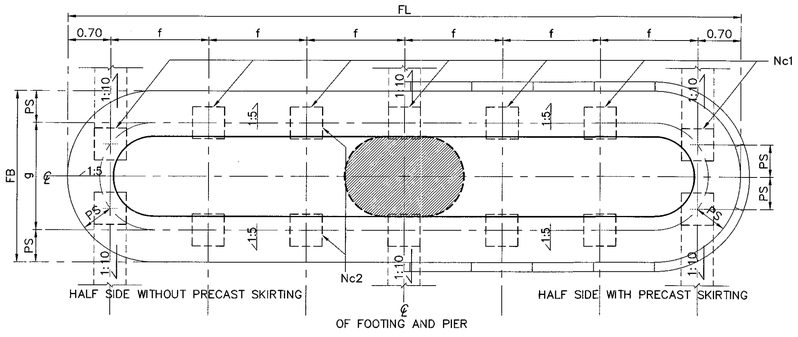

PLAN OF FOOTING

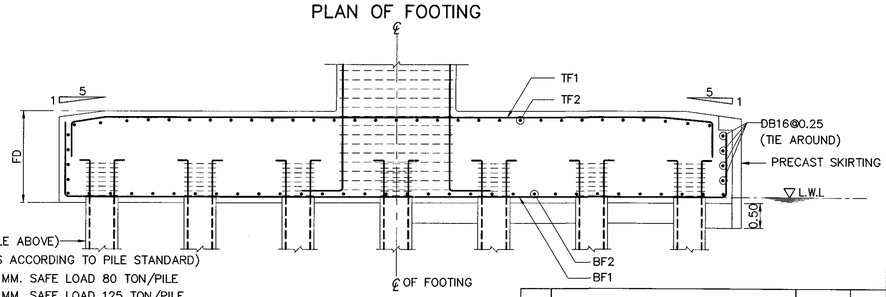

PILE (FROM TABLE ABOVE)
(OTHERS DETAILS ACCORDING TO PILE STANDARD)
PILE Ø 525x525 MM. SAFE LOAD 80 TON/PILE
PILE Ø 650x650 MM. SAFE LOAD 125 TON/PILE

SECTION OF FOOTING

REF.	REVISION	SIGNATURE	DATE

KINGDOM OF THAILAND

MINISTRY OF TRANSPORT
DEPARTMENT OF HIGHWAYS

STANDARD DRAWING

SINGLE COLUMN PIER WITH SIDEWALK (FOR BOX BEAM)
ROADWAY WIDTH 9.00 - 15.00 M., 20.00 M. SPAN,
8.00 M. < HEIGHT ≤ 15.00 M.

DESIGNED : D.O.H. & CONSULTANTS	CHECKED : BUREAU OF LOCATION & DESIGN	DATE : OCT 2015
SUBMITTED : (DIRECTOR OF LOCATION & DESIGN BUREAU)		SCALE : AS SHOWN
APPROVED : (FOR DIRECTOR GENERAL)		DWG NO. PC-225
		SHEET NO. 285

D:\std dwg 2015\PC-225(REV00)

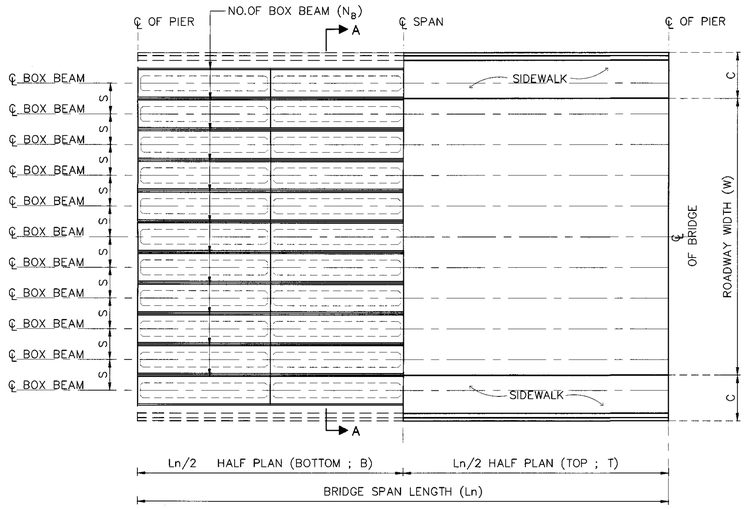

PLAN OF BRIDGE DECK

NOTES :

1. ALL DIMENSIONS SHOWN ARE IN METERS UNLESS OTHERWISE INDICATED.
2. DESIGN LIVE LOAD : HL-93
3. A MINIMUM ULTIMATE COMPRESSIVE STRENGTH FOR A 150x150x150 MM. CUBE AT 28 DAYS AS FOLLOWS:
   - A) FOR ABUTMENT AND WINGWALL 35 MPa. (357 KG/CM^2)
   - B) FOR FOOTING 35 MPa. (357 KG/CM^2)
   - C) FOR SIDEWALK AND BARRIER 35 MPa. (357 KG/CM^2)
4. REBAR SIZES SMALLER THAN 12 MM. SHALL BE TIS 20 GRADE SR 24 PLAIN ROUND BARS, OTHERS SHALL BE TIS 24 GRADE SD 40 DEFORMED BARS UNLESS OTHERWISE INDICATED.

1.SPAN LENGTH 20.00 M., 8.00 M. < HEIGHT ≤ 15.00 M.

Ln (M.)	W (M.)	NO.OF BOXBEAM (N_B)	DIMENSION (M.)								C (SIDE WALK WIDTH)		REBAR COLUMN					
			A1	A2	A3	b	e	S	h1	h2	SW=1.00 M.	SW=1.50 M.	Dx1.5D(M.)	CR1	CR2	ST3	CR3	ST4
20.00 M. SEISMIC LEVEL 1	9.00	11	11.00	1.40	1.80	1.60	1.45	1.80	1.00	1.50	1.00	1.50	1.30x1.95	54-DB28	–	DB12@0.15	38-DB28	DB12@0.30
	10.00	12	12.00	1.50	2.00	1.60	1.45	2.00	1.00	1.50	1.00	1.50	1.30x1.95	66-DB28	–	DB12@0.15	38-DB28	DB12@0.30
	11.00	13	13.00	1.60	2.20	1.60	1.45	1.83	1.00	1.50	1.00	1.50	1.40x2.10	66-DB28	–	DB12@0.15	44-DB28	DB12@0.30
	12.00	14	14.00	1.70	2.30	1.80	1.60	2.00	1.00	1.70	1.00	1.50	1.50x2.25	50-DB28	–	DB12@0.15	50-DB28	DB12@0.30
	13.00	15	15.00	1.80	2.50	1.80	1.60	1.86	1.00	1.70	1.00	1.50	1.50x2.25	50-DB28	–	DB12@0.15	50-DB28	DB12@0.30
	14.00	16	16.00	2.00	2.70	1.80	1.60	2.00	1.00	1.70	1.00	1.50	1.50x2.25	50-DB28	–	DB12@0.15	50-DB28	DB12@0.30
	15.00	16	16.00	2.00	2.70	1.80	1.60	2.00	1.00	1.70	1.00	–	1.50x2.25	50-DB28	–	DB12@0.15	50-DB28	DB12@0.30
20.00 M. SEISMIC LEVEL 2	9.00	11	11.00	1.40	1.80	1.60	1.45	1.80	1.00	1.50	1.00	1.50	1.30x1.95	48-DB28	48-DB28	DB12@0.15	38-DB28	DB12@0.30
	10.00	12	12.00	1.50	2.00	1.60	1.45	2.00	1.00	1.50	1.00	1.50	1.30x1.95	58-DB28	58-DB28	DB12@0.15	44-DB28	DB12@0.30
	11.00	13	13.00	1.60	2.20	1.60	1.45	1.83	1.00	1.50	1.00	1.50	1.40x2.10	54-DB28	54-DB28	DB12@0.15	44-DB28	DB12@0.30
	12.00	14	14.00	1.70	2.30	1.80	1.60	2.00	1.00	1.70	1.00	1.50	1.50x2.25	50-DB28	50-DB28	DB12@0.15	50-DB28	DB12@0.30
	13.00	15	15.00	1.80	2.50	1.80	1.60	1.86	1.00	1.70	1.00	1.50	1.50x2.25	55-DB28	55-DB28	DB12@0.15	50-DB28	DB12@0.30
	14.00	16	16.00	2.00	2.70	1.80	1.60	2.00	1.00	1.70	1.00	1.50	1.50x2.25	60-DB28	60-DB28	DB12@0.15	50-DB28	DB12@0.30
	15.00	16	16.00	2.00	2.70	1.80	1.60	2.00	1.00	1.70	1.00	–	1.50x2.25	60-DB28	60-DB28	DB12@0.15	50-DB28	DB12@0.30

Ln (M.)	W (M.)	REBAR CAP BEAM						PILE SIZING, PS (MM.)	Nc1	Nc2	NO.OF PILE	FOOTING SKEW 0°-15°					FOOTING SKEW 16°-45°				
		T1	T2	T3	B1	ST1(STIRRUPS)	ST2(STIRRUPS)					FL	FB	FD	f	g	FL	FB	FD	f	g
20.00 M. SEISMIC LEVEL 1	9.00	16-DB28	16-DB28	–	10-DB20	3-DB12@0.20	4-DB12@0.125	Ø 650x650	6	2	12	11.00	3.25	1.85	1.92	1.95	11.00	3.75	1.85	1.92	2.45
	10.00	15-DB28	15-DB28	15-DB28	12-DB20	3-DB12@0.20	4-DB12@0.125	Ø 650x650	7	2	14	12.00	3.25	2.00	1.77	1.95	12.00	3.75	2.00	1.77	2.45
	11.00	17-DB28	17-DB28	17-DB28	12-DB20	3-DB12@0.15	5-DB12@0.125	Ø 650x650	7	2	14	13.00	3.25	2.00	1.93	1.95	13.00	3.75	2.00	1.93	2.45
	12.00	18-DB28	18-DB28	18-DB28	12-DB20	3-DB12@0.15	5-DB12@0.125	Ø 650x650	8	2	16	14.00	3.25	2.20	1.80	1.95	14.00	3.75	2.20	1.80	2.45
	13.00	19-DB28	19-DB28	19-DB28	12-DB20	3-DB12@0.15	5-DB12@0.125	Ø 650x650	8	2	16	15.00	3.25	2.20	1.94	1.95	15.00	3.75	2.20	1.94	2.45
	14.00	22-DB28	22-DB28	22-DB28	12-DB20	3-DB12@0.15	5-DB12@0.125	Ø 650x650	8	2	16	16.00	3.25	2.45	2.09	1.95	16.00	3.75	2.45	2.09	2.45
	15.00	22-DB28	22-DB28	22-DB28	12-DB20	3-DB12@0.15	5-DB12@0.125	Ø 650x650	8	2	16	16.00	3.25	2.45	2.09	1.95	16.00	3.75	2.45	2.09	2.45
20.00 M. SEISMIC LEVEL 2	9.00	16-DB28	16-DB28	–	10-DB20	3-DB12@0.20	4-DB12@0.125	Ø 650x650	6	2	12	11.00	3.25	1.85	1.92	1.95	11.00	3.75	1.85	1.92	2.45
	10.00	15-DB28	15-DB28	15-DB28	12-DB20	3-DB12@0.20	4-DB12@0.125	Ø 650x650	7	2	14	12.00	3.25	2.00	1.77	1.95	12.00	3.75	2.00	1.77	2.45
	11.00	17-DB28	17-DB28	17-DB28	12-DB20	3-DB12@0.15	5-DB12@0.125	Ø 650x650	7	2	14	13.00	3.25	2.00	1.93	1.95	13.00	3.75	2.00	1.93	2.45
	12.00	18-DB28	18-DB28	18-DB28	12-DB20	3-DB12@0.15	5-DB12@0.125	Ø 650x650	8	2	16	14.00	3.25	2.20	1.80	1.95	14.00	3.75	2.20	1.80	2.45
	13.00	19-DB28	19-DB28	19-DB28	12-DB20	3-DB12@0.15	5-DB12@0.125	Ø 650x650	8	2	16	15.00	3.25	2.20	1.94	1.95	15.00	3.75	2.20	1.94	2.45
	14.00	22-DB28	22-DB28	22-DB28	12-DB20	3-DB12@0.15	5-DB12@0.125	Ø 650x650	8	2	16	16.00	3.25	2.45	2.09	1.95	16.00	3.75	2.45	2.09	2.45
	15.00	22-DB28	22-DB28	22-DB28	12-DB20	3-DB12@0.15	5-DB12@0.125	Ø 650x650	8	2	16	16.00	3.25	2.45	2.09	1.95	16.00	3.75	2.45	2.09	2.45

Ln (M.)	W (M.)	BOTTOM REBAR		TOP REBAR	
		BF1	BF2	TF1	TF2
20.00 M. SEISMIC LEVEL 1	9.00	DB28@0.11 **	DB25@0.14	DB20@0.18	DB20@0.18
	10.00	DB28@0.09 **	DB25@0.14	DB20@0.18	DB20@0.18
	11.00	DB32@0.10 **	DB25@0.13	DB20@0.16	DB20@0.17
	12.00	DB32@0.10 **	DB25@0.13	DB20@0.16	DB20@0.17
	13.00	DB32@0.10 **	DB25@0.12	DB20@0.14	DB20@0.15
	14.00	DB32@0.10 **	DB25@0.12	DB20@0.14	DB20@0.15
	15.00	DB32@0.13 **	DB25@0.12	DB20@0.14	DB20@0.15
20.00 M. SEISMIC LEVEL 2	9.00	DB28@0.09 **	DB25@0.14	DB20@0.18	DB20@0.18
	10.00	DB28@0.08 **	DB25@0.14	DB20@0.18	DB20@0.18
	11.00	DB32@0.08 **	DB25@0.13	DB20@0.16	DB20@0.17
	12.00	DB32@0.08 **	DB25@0.13	DB20@0.16	DB20@0.17
	13.00	DB32@0.07 **	DB25@0.12	DB20@0.14	DB20@0.15
	14.00	DB32@0.07 **	DB25@0.12	DB20@0.14	DB20@0.15
	15.00	DB32@0.07 **	DB25@0.12	DB20@0.14	DB20@0.15

REMARK ; ** = 2 LAYERS

ADJUST LENGTH FOR SKEW BRIDGE

VALUE OF SEC θ IN CASE OF SKEW BRIDGE (SKEW, θ)					
SKEW ANGLE, θ (DEGREE)	0	5	10	15	20
SEC θ	1.0000	1.0038	1.0154	1.0353	1.0642
SKEW ANGLE, θ (DEGREE)	25	30	35	40	45
SEC θ	1.1034	1.1547	1.2208	1.3054	1.4142

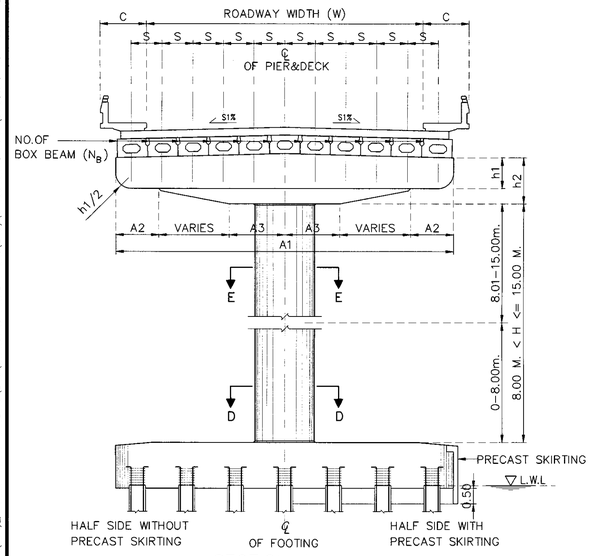

SECTION A-A

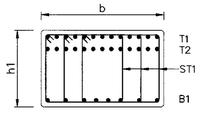

SECTION B-B

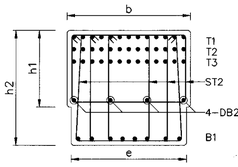

SECTION C-C

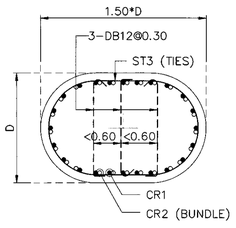

SECTION D-D

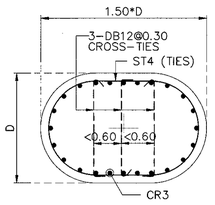

SECTION E-E

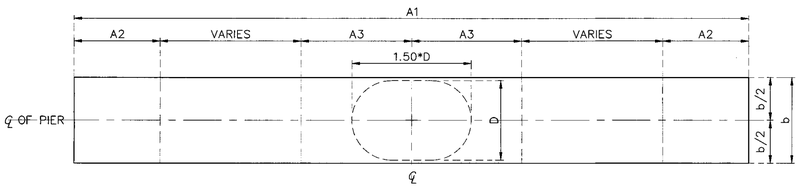

PLAN OF CAP

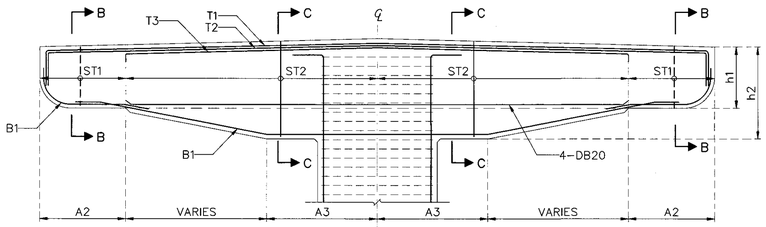

SECTION OF CAP

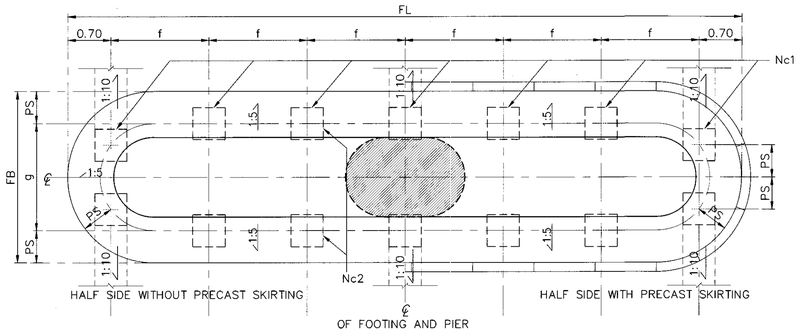

PLAN OF FOOTING

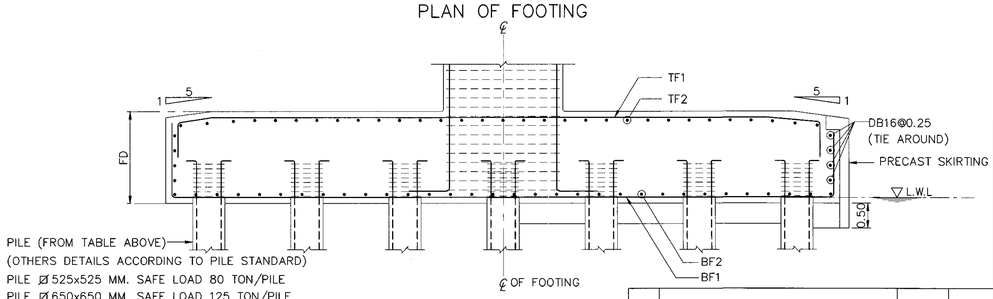

SECTION OF FOOTING

KINGDOM OF THAILAND

MINISTRY OF TRANSPORT

DEPARTMENT OF HIGHWAYS

STANDARD DRAWING

SINGLE COLUMN PIER WITH SIDEWALK (FOR BOX BEAM)
ROADWAY WIDTH 9.00 – 15.00 M., 20.00 M. SPAN,
8.00 M. < HEIGHT ≤ 15.00 M.

DESIGNED : D.O.H. & CONSULTANTS	**CHECKED :** BUREAU OF LOCATION & DESIGN		**DATE :** MAR 2018
SUBMITTED : (DIRECTOR OF LOCATION & DESIGN BUREAU)			**SCALE :** AS SHOWN
APPROVED : (FOR DIRECTOR GENERAL)			**DWG NO.** PC-225
			SHEET NO. 285/R1

REV.	REVISION	SIGNATURE	DATE
REV.1	REVISION 1/2018		JAN 2018

D:\20141103_Team Group\โปรเจค 2558\10P2045_STANDARD DRAWING DOH\Standard Drawing DOH_61.02.19\แก้ไขครั้งที่ 1(ม.ค.61)_Revision 1.2017-JAN2018\ENG\STANDARD FINAL-1-CAD(ENG)\STRUCTURAL WORK\Structural Work-Sec. 1 Bridge Span Not More Than 20.00 M\PC-225(REV01)

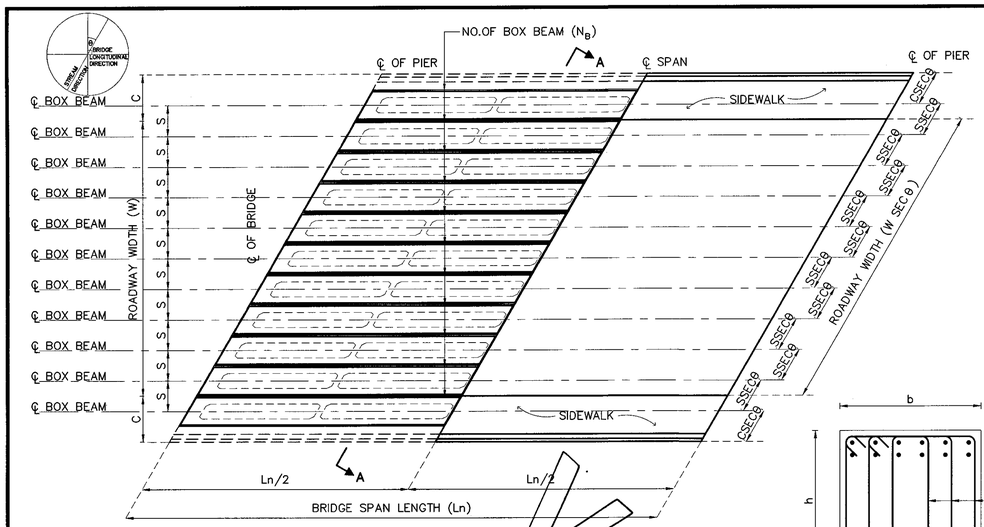

PLAN OF BRIDGE DECK

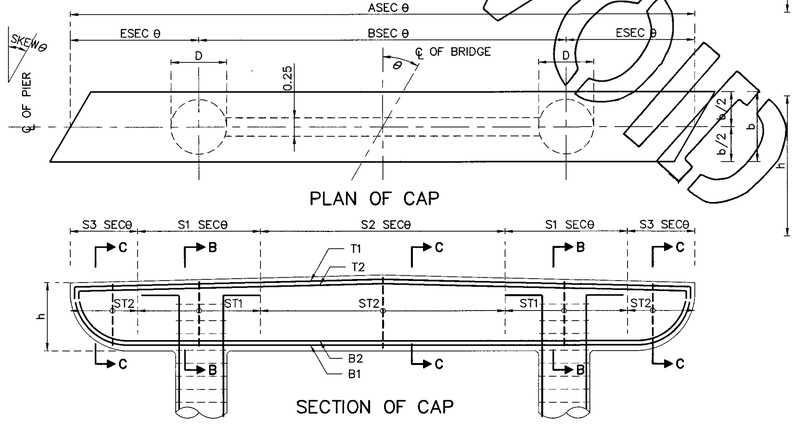

PLAN OF CAP

SECTION OF CAP

SECTION B–B

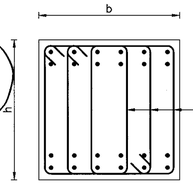

SECTION C–C

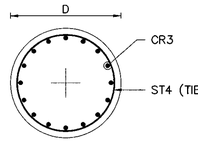

SECTION E–E

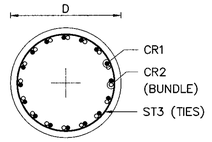

SECTION D–D

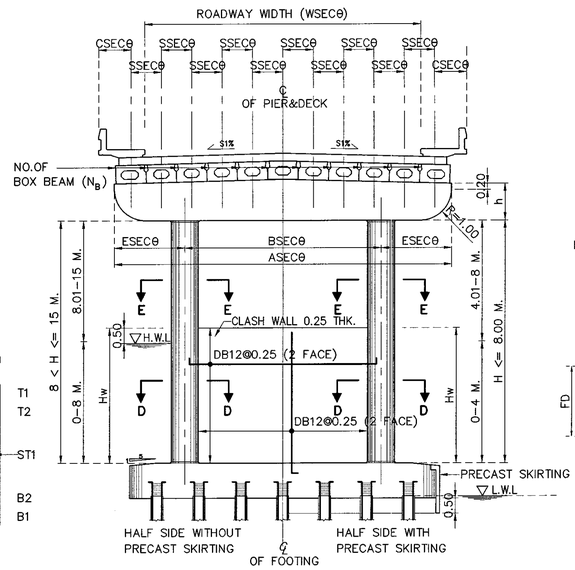

SECTION A–A

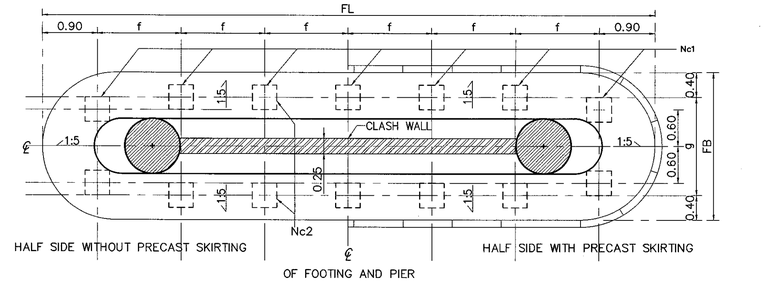

PLAN OF FOOTING

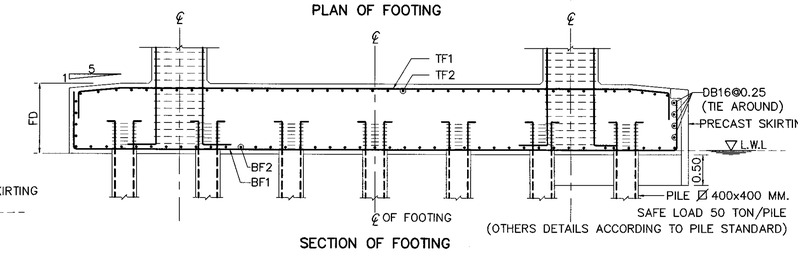

SECTION OF FOOTING

ADJUST LENGTH FOR SKEW BRIDGE

	VALUE OF SECθ IN CASE OF SKEW BRIDGE (SKEW, θ)									
SKEW ANGLE, θ (DEGREE)	0	5	10	15	20	25	30	35	40	45
SEC θ	1.0000	1.0038	1.0154	1.0353	1.0642	1.1034	1.1547	1.2208	1.3054	1.4142

1.SPAN 15.00 M., HEIGHT ≤ 15.00 M.

1.1 DIMENSION OF SUBSTRUCTURE & REBAR OF COLUMN

Ln (M.)	W (M.)	NO.OF BOXBEAM (N_B)	DIMENSION (M.)							C (SIDEWALK WIDTH)		REBAR COLUMN					
			A	B	E	S	S1	S2	S3	SW=1.00 M.	SW=1.50 M.	D (M.)	CR1	CR2	ST3	CR3	ST4
15.00 M. SEISMIC LEVEL 1	9.00	11	11.00	6.80	2.10	1.00	2.20	4.60	1.00	1.00	1.50	1.10	24–DB25	24–DB25	DB12@0.15	24–DB25	DB12@0.30
	10.00	12	12.00	7.40	2.30	1.00	3.60	2.80	1.00	1.00	1.50	1.10	25–DB25	25–DB25	DB12@0.15	25–DB25	DB12@0.30
	11.00	13	13.00	8.00	2.50	1.00	4.00	3.00	1.00	1.00	1.50	1.20	26–DB25	26–DB25	DB12@0.15	26–DB25	DB12@0.30
	12.00	14	14.00	8.30	2.85	1.00	3.70	4.60	1.00	1.00	1.50	1.20	27–DB25	27–DB25	DB12@0.15	27–DB25	DB12@0.30
15.00 M. SEISMIC LEVEL 2	9.00	11	11.00	6.80	2.10	1.00	2.20	4.60	1.00	1.00	1.50	1.10	30–DB25	30–DB25	DB12@0.15	30–DB25	DB12@0.30
	10.00	12	12.00	7.40	2.30	1.00	3.60	2.80	1.00	1.00	1.50	1.10	32–DB25	32–DB25	DB12@0.15	32–DB25	DB12@0.30
	11.00	13	13.00	8.00	2.50	1.00	4.00	3.00	1.00	1.00	1.50	1.20	33–DB25	33–DB25	DB12@0.15	33–DB25	DB12@0.30
	12.00	14	14.00	8.30	2.85	1.00	3.70	4.60	1.00	1.00	1.50	1.20	34–DB25	34–DB25	DB12@0.15	34–DB25	DB12@0.30

1.2 REBAR OF CAP BEAM

Ln (M.)	W (M.)	b	h	SKEW 0–30 DEGREE						SKEW 31–45 DEGREE					
				T1	T2	B1	B2	ST1(STIRRUPS)	ST2(STIRRUPS)	T1	T2	B1	B2	ST1(STIRRUPS)	ST2(STIRRUPS)
15.00 M. SEISMIC LEVEL 1	9.00	1.30	1.20	15–DB25	–	15–DB25	–	4–DB12@0.15	4–DB12@0.30	15–DB25	–	15–DB25	–	4–DB12@0.15	4–DB12@0.30
	10.00	1.30	1.20	17–DB25	–	17–DB25	–	4–DB12@0.15	4–DB12@0.30	17–DB25	–	17–DB25	–	4–DB12@0.15	4–DB12@0.30
	11.00	1.40	1.20	18–DB25	–	18–DB25	–	4–DB12@0.15	4–DB12@0.30	18–DB25	–	18–DB25	–	4–DB12@0.15	4–DB12@0.30
	12.00	1.40	1.20	19–DB25	–	19–DB25	–	4–DB12@0.15	4–DB12@0.30	19–DB25	–	19–DB25	–	4–DB12@0.15	4–DB12@0.30
15.00 M. SEISMIC LEVEL 2	9.00	1.30	1.20	15–DB25	–	15–DB25	–	4–DB12@0.15	4–DB12@0.30	15–DB25	–	15–DB25	–	4–DB12@0.15	4–DB12@0.30
	10.00	1.30	1.20	17–DB25	–	17–DB25	–	4–DB12@0.15	4–DB12@0.30	17–DB25	–	17–DB25	–	4–DB12@0.15	4–DB12@0.30
	11.00	1.40	1.20	18–DB25	–	18–DB25	–	4–DB12@0.15	4–DB12@0.30	18–DB25	–	18–DB25	–	4–DB12@0.15	4–DB12@0.30
	12.00	1.40	1.20	19–DB25	–	19–DB25	–	4–DB12@0.15	4–DB12@0.30	19–DB25	–	19–DB25	–	4–DB12@0.15	4–DB12@0.30

1.3 FOUNDATION & PILE

Ln (M.)	W (M.)	PILE SIZING (MM.)	Nc1	Nc2	NO.OF PILE	FOOTING DIMENSION (M.)					BOTTOM REBAR		TOP REBAR	
						FL	FB	FD	f	g	BF1	BF2	TF1	TF2
15.00 M. SEISMIC LEVEL 1	9.00	⊠ 400x400	7	2	14	10.00	2.80	1.50	1.37	2.00	DB25@0.125 **	DB25@0.175	DB25@0.125 **	DB20@0.200
	10.00	⊠ 400x400	7	2	14	11.00	2.80	1.50	1.53	2.00	DB28@0.15 **	DB25@0.175	DB28@0.15 **	DB20@0.200
	11.00	⊠ 400x400	8	2	16	12.00	2.80	1.50	1.46	2.00	DB28@0.125 **	DB25@0.175	DB28@0.125 **	DB20@0.200
	12.00	⊠ 400x400	8	2	16	13.00	2.80	1.50	1.60	2.00	DB28@0.10 **	DB25@0.175	DB28@0.10 **	DB20@0.200
15.00 M. SEISMIC LEVEL 2	9.00	⊠ 400x400	7	2	14	10.00	2.80	1.50	1.37	2.00	DB25@0.125 **	DB25@0.175	DB25@0.125 **	DB20@0.200
	10.00	⊠ 400x400	7	2	14	11.00	2.80	1.50	1.53	2.00	DB28@0.15 **	DB25@0.175	DB28@0.15 **	DB20@0.200
	11.00	⊠ 400x400	8	2	16	12.00	2.80	1.50	1.46	2.00	DB28@0.125 **	DB25@0.175	DB28@0.125 **	DB20@0.200
	12.00	⊠ 400x400	8	2	16	13.00	2.80	1.50	1.60	2.00	DB28@0.10 **	DB25@0.175	DB28@0.10 **	DB20@0.200

2.SPAN 20.00 M., HEIGHT ≤ 15.00 M.

2.1 DIMENSION OF SUBSTRUCTURE & REBAR OF COLUMN

Ln (M.)	W (M.)	NO.OF BOXBEAM (N_B)	DIMENSION (M.)							C (SIDEWALK WIDTH)		REBAR COLUMN					
			A	B	E	S	S1	S2	S3	SW=1.00 M.	SW=1.50 M.	D (M.)	CR1	CR2	ST3	CR3	ST4
20.00 M. SEISMIC LEVEL 1	9.00	11	11.00	6.80	2.10	1.00	2.20	4.60	1.00	1.00	1.50	1.10	24–DB25	24–DB25	DB12@0.15	24–DB25	DB12@0.30
	10.00	12	12.00	7.40	2.30	1.00	3.60	2.80	1.00	1.00	1.50	1.10	25–DB25	25–DB25	DB12@0.15	25–DB25	DB12@0.30
	11.00	13	13.00	8.00	2.50	1.00	4.00	3.00	1.00	1.00	1.50	1.20	26–DB25	26–DB25	DB12@0.15	26–DB25	DB12@0.30
	12.00	13	14.00	8.30	2.85	1.00	3.70	4.60	1.00	1.00	1.50	1.20	27–DB25	27–DB25	DB12@0.15	27–DB25	DB12@0.30
20.00 M. SEISMIC LEVEL 2	9.00	11	11.00	6.80	2.10	1.00	2.20	4.60	1.00	1.00	1.50	1.10	42–DB25	42–DB25	DB12@0.15	42–DB25	DB12@0.30
	10.00	12	12.00	7.40	2.30	1.00	3.60	2.80	1.00	1.00	1.50	1.10	46–DB25	46–DB25	DB12@0.15	46–DB25	DB12@0.30
	11.00	13	13.00	8.00	2.50	1.00	4.00	3.00	1.00	1.00	1.50	1.20	46–DB25	46–DB25	DB12@0.15	46–DB25	DB12@0.30
	12.00	13	14.00	8.30	2.85	1.00	3.70	4.60	1.00	1.00	1.50	1.20	47–DB25	47–DB25	DB12@0.15	47–DB25	DB12@0.30

2.2 REBAR OF CAP BEAM

Ln (M.)	W (M.)	b	h	SKEW 0–30 DEGREE						SKEW 31–45 DEGREE					
				T1	T2	B1	B2	ST1(STIRRUPS)	ST2(STIRRUPS)	T1	T2	B1	B2	ST1(STIRRUPS)	ST2(STIRRUPS)
20.00 M. SEISMIC LEVEL 1	9.00	1.30	1.20	18–DB25	–	18–DB25	–	4–DB12@0.15	4–DB12@0.20	18–DB25	–	18–DB25	–	4–DB12@0.15	4–DB12@0.20
	10.00	1.30	1.20	18–DB25	–	12–DB25	12–DB25	4–DB12@0.15	4–DB12@0.20	18–DB25	–	12–DB25	12–DB25	4–DB12@0.15	4–DB12@0.20
	11.00	1.40	1.20	18–DB25	–	13–DB25	13–DB25	5–DB12@0.15	4–DB12@0.20	18–DB25	–	13–DB25	13–DB25	5–DB12@0.15	4–DB12@0.20
	12.00	1.40	1.20	18–DB25	–	14–DB25	14–DB25	5–DB12@0.15	4–DB12@0.20	18–DB25	–	14–DB25	14–DB25	5–DB12@0.15	4–DB12@0.20
20.00 M. SEISMIC LEVEL 2	9.00	1.30	1.20	18–DB25	–	18–DB25	–	4–DB12@0.15	4–DB12@0.20	18–DB25	–	18–DB25	–	4–DB12@0.15	4–DB12@0.20
	10.00	1.30	1.20	18–DB25	–	12–DB25	12–DB25	4–DB12@0.15	4–DB12@0.20	18–DB25	–	12–DB25	12–DB25	4–DB12@0.15	4–DB12@0.20
	11.00	1.40	1.20	18–DB25	–	13–DB25	13–DB25	5–DB12@0.15	4–DB12@0.20	18–DB25	–	13–DB25	13–DB25	5–DB12@0.15	4–DB12@0.20
	12.00	1.40	1.20	18–DB25	–	14–DB25	14–DB25	5–DB12@0.15	4–DB12@0.20	18–DB25	–	14–DB25	14–DB25	5–DB12@0.15	4–DB12@0.20

2.3 FOUNDATION & PILE

Ln (M.)	W (M.)	PILE SIZING (MM.)	Nc1	Nc2	NO.OF PILE	FOOTING DIMENSION (M.)					BOTTOM REBAR		TOP REBAR	
						FL	FB	FD	f	g	BF1	BF2	TF1	TF2
20.00 M. SEISMIC LEVEL 1	9.00	⊠ 400x400	8	2	16	10.00	2.80	1.50	1.17	2.00	DB25@0.125 **	DB25@0.175	DB25@0.125 **	DB20@0.200
	10.00	⊠ 400x400	8	2	16	11.00	2.80	1.50	1.31	2.00	DB28@0.15 **	DB25@0.175	DB28@0.15 **	DB20@0.200
	11.00	⊠ 400x400	9	2	18	12.50	2.80	1.50	1.34	2.00	DB28@0.125 **	DB25@0.175	DB28@0.125 **	DB20@0.200
	12.00	⊠ 400x400	10	2	20	13.00	2.80	1.50	1.24	2.00	DB28@0.10 **	DB25@0.175	DB28@0.10 **	DB20@0.200
20.00 M. SEISMIC LEVEL 2	9.00	⊠ 400x400	8	2	16	10.00	2.80	1.50	1.17	2.00	DB25@0.125 **	DB25@0.175	DB25@0.125 **	DB20@0.200
	10.00	⊠ 400x400	8	2	16	11.00	2.80	1.50	1.31	2.00	DB28@0.15 **	DB25@0.175	DB28@0.15 **	DB20@0.200
	11.00	⊠ 400x400	9	2	18	12.50	2.80	1.50	1.34	2.00	DB28@0.125 **	DB25@0.175	DB28@0.125 **	DB20@0.200
	12.00	⊠ 400x400	10	2	20	13.00	2.80	1.50	1.24	2.00	DB28@0.10 **	DB25@0.175	DB28@0.10 **	DB20@0.200

REMARK ; ** = 2 LAYERS

NOTE :
1. ALL DIMENSIONS SHOWN ARE IN METERS UNLESS OTHERWISE INDICATED
2. LIVE LOADING : VEHICLE LOAD HL–93
3. A MINIMUM ULTIMATE COMPRESSIVE STRENGTH FOR A 150X150X150 MM. CUBE AT 28 DAYS AS FOLLOWS :
   A) FOR COLUMN AND CAP BEAM 35 MPa
   B) FOR FOOTING 35 MPa
4. REBARS SMALLER THAN RB9 MM. SHALL BE TIS 20 GRADE SR 24 PLAIN ROUND BARS, OTHERS SHALL BE TIS 24 GRADE SD40 DEFORMED BARS UNLESS OTHERWISE INDICATED.

REF.	REVISION	SIGNATURE	DATE

KINGDOM OF THAILAND

MINISTRY OF TRANSPORT

DEPARTMENT OF HIGHWAYS

STANDARD DRAWING

TWO COLUMNS PIER WITH SIDEWALK (FOR BOX BEAM)
ROADWAY WIDTH 9.00 – 12.00 M., 15.00 M.
AND 20.00 M. SPAN HEIGHT ≤ 15.00 M.

DESIGNED : D.O.H. & CONSULTANTS	CHECKED : BUREAU OF LOCATION & DESIGN	DATE : OCT 2015
SUBMITTED : (DIRECTOR OF LOCATION & DESIGN BUREAU)		SCALE : AS SHOWN
APPROVED : (FOR DIRECTOR GENERAL)		DWG NO. PC–226
		SHEET NO. 286

D:\std dwg 2015\PC-226(REV00)

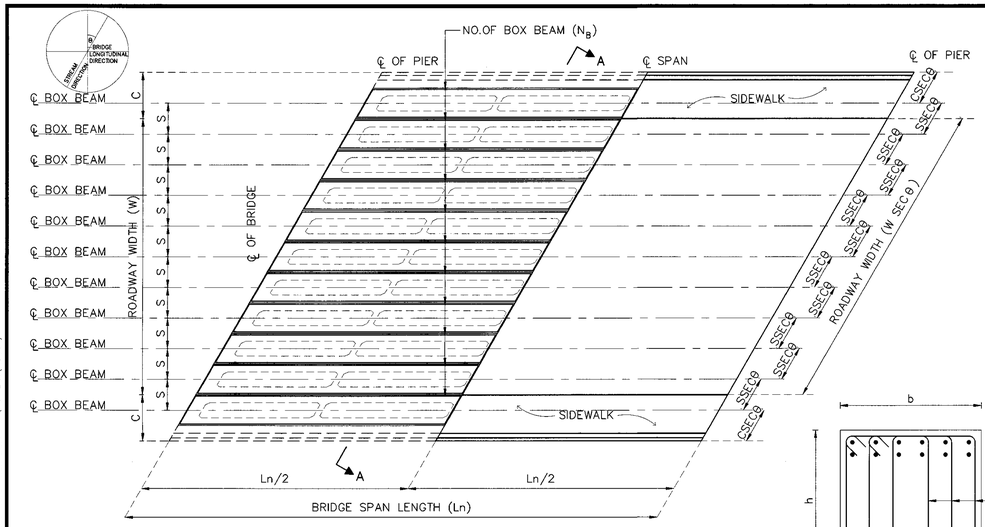

PLAN OF BRIDGE DECK

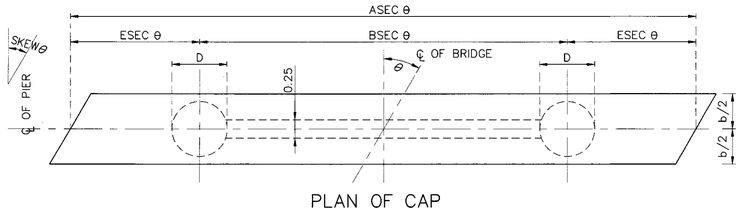

PLAN OF CAP

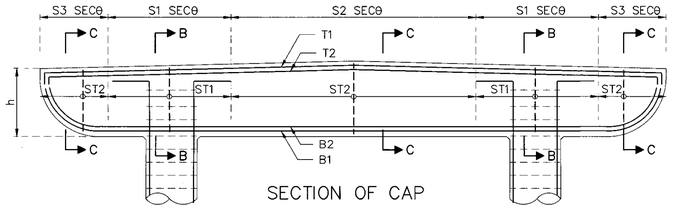

SECTION OF CAP

SECTION B–B

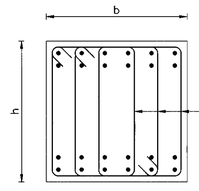

SECTION C–C

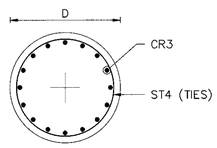

SECTION E–E

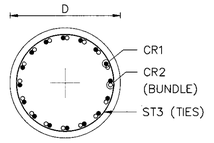

SECTION D–D

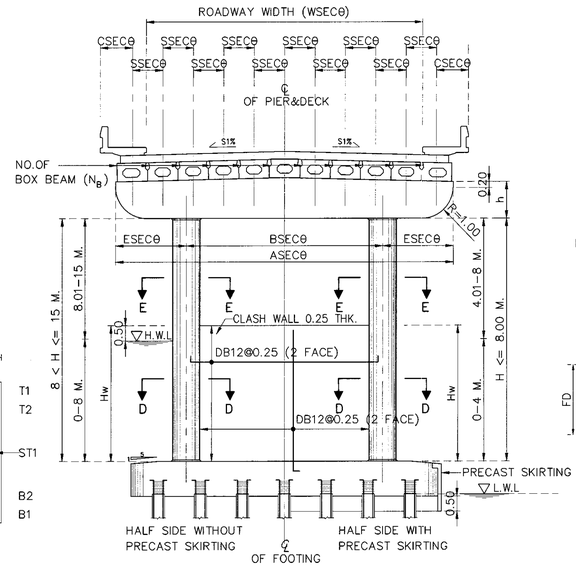

SECTION A–A

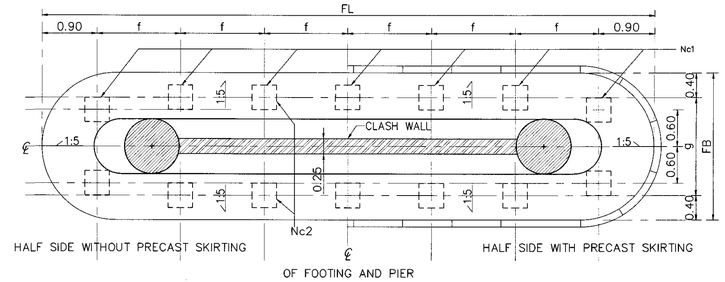

PLAN OF FOOTING

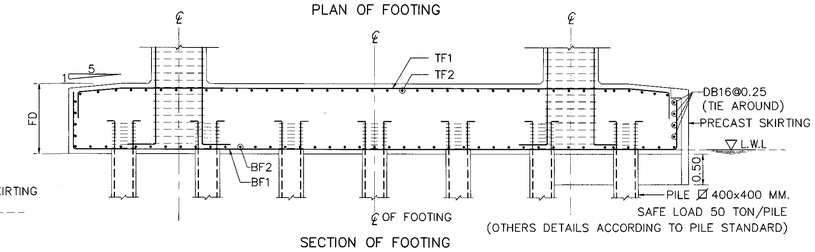

SECTION OF FOOTING

ADJUST LENGTH FOR SKEW BRIDGE

VALUE OF SECθ IN CASE OF SKEW BRIDGE (SKEW, θ)										
SKEW ANGLE, θ (DEGREE)	0	5	10	15	20	25	30	35	40	45
SEC θ	1.0000	1.0038	1.0154	1.0353	1.0642	1.1034	1.1547	1.2208	1.3054	1.4142

1.SPAN 15.00 M., HEIGHT ≤ 15.00 M.

1.1 DIMENSION OF SUBSTRUCTURE & REBAR OF COLUMN

Ln (M.)	W (M.)	NO.OF BOXBEAM (N_B)	DIMENSION (M.)							C (SIDEWALK WIDTH)		REBAR COLUMN					
			A	B	E	S	S1	S2	S3	SW=1.00 M.	SW=1.50 M.	D (M.)	CR1	CR2	ST3	CR3	ST4
15.00 M. SEISMIC LEVEL 1	9.00	11	11.00	6.80	2.10	1.00	2.20	4.60	1.00	1.00	1.50	1.10	24–DB25	24–DB25	DB12@0.15	24–DB25	DB12@0.30
	10.00	12	12.00	7.40	2.30	1.00	3.60	2.80	1.00	1.00	1.50	1.10	25–DB25	25–DB25	DB12@0.15	25–DB25	DB12@0.30
	11.00	13	13.00	8.00	2.50	1.00	4.00	3.00	1.00	1.00	1.50	1.20	26–DB25	26–DB25	DB12@0.15	26–DB25	DB12@0.30
	12.00	14	14.00	8.30	2.85	1.00	3.70	4.60	1.00	1.00	1.50	1.20	27–DB25	27–DB25	DB12@0.15	27–DB25	DB12@0.30
15.00 M. SEISMIC LEVEL 2	9.00	11	11.00	6.80	2.10	1.00	2.20	4.60	1.00	1.00	1.50	1.10	30–DB25	30–DB25	DB12@0.15	30–DB25	DB12@0.30
	10.00	12	12.00	7.40	2.30	1.00	3.60	2.80	1.00	1.00	1.50	1.10	32–DB25	32–DB25	DB12@0.15	32–DB25	DB12@0.30
	11.00	13	13.00	8.00	2.50	1.00	4.00	3.00	1.00	1.00	1.50	1.20	33–DB25	33–DB25	DB12@0.15	33–DB25	DB12@0.30
	12.00	14	14.00	8.30	2.85	1.00	3.70	4.60	1.00	1.00	1.50	1.20	34–DB25	34–DB25	DB12@0.15	34–DB25	DB12@0.30

1.2 REBAR OF CAP BEAM

Ln (M.)	W (M.)	b	h	SKEW 0–30 DEGREE						SKEW 31–45 DEGREE					
				T1	T2	B1	B2	ST1(STIRRUPS)	ST2(STIRRUPS)	T1	T2	B1	B2	ST1(STIRRUPS)	ST2(STIRRUPS)
15.00 M. SEISMIC LEVEL 1	9.00	1.30	1.20	15–DB25	–	15–DB25	–	4–DB12@0.15	4–DB12@0.30	15–DB25	–	15–DB25	–	4–DB12@0.15	4–DB12@0.30
	10.00	1.30	1.20	17–DB25	–	17–DB25	–	4–DB12@0.15	4–DB12@0.30	17–DB25	–	17–DB25	–	4–DB12@0.15	4–DB12@0.30
	11.00	1.40	1.20	18–DB25	–	18–DB25	–	4–DB12@0.15	4–DB12@0.30	18–DB25	–	18–DB25	–	4–DB12@0.15	4–DB12@0.30
	12.00	1.40	1.20	19–DB25	–	19–DB25	–	4–DB12@0.15	4–DB12@0.30	19–DB25	–	19–DB25	–	4–DB12@0.15	4–DB12@0.30
15.00 M. SEISMIC LEVEL 2	9.00	1.30	1.20	15–DB25	–	15–DB25	–	4–DB12@0.15	4–DB12@0.30	15–DB25	–	15–DB25	–	4–DB12@0.15	4–DB12@0.30
	10.00	1.30	1.20	17–DB25	–	17–DB25	–	4–DB12@0.15	4–DB12@0.30	17–DB25	–	17–DB25	–	4–DB12@0.15	4–DB12@0.30
	11.00	1.40	1.20	18–DB25	–	18–DB25	–	4–DB12@0.15	4–DB12@0.30	18–DB25	–	18–DB25	–	4–DB12@0.15	4–DB12@0.30
	12.00	1.40	1.20	19–DB25	–	19–DB25	–	4–DB12@0.15	4–DB12@0.30	19–DB25	–	19–DB25	–	4–DB12@0.15	4–DB12@0.30

1.3 FOUNDATION & PILE

Ln (M.)	W (M.)	PILE SIZING (MM.)	Nc1	Nc2	NO.OF PILE	FOOTING DIMENSION (M.)					BOTTOM REBAR		TOP REBAR	
						FL	FB	FD	f	g	BF1	BF2	TF1	TF2
15.00 M. SEISMIC LEVEL 1	9.00	Ø 400x400	7	2	14	10.00	2.80	1.50	1.37	2.00	DB25@0.125 **	DB25@0.175	DB25@0.125 **	DB20@0.200
	10.00	Ø 400x400	7	2	14	11.00	2.80	1.50	1.53	2.00	DB28@0.15 **	DB25@0.175	DB28@0.15 **	DB20@0.200
	11.00	Ø 400x400	8	2	16	12.00	2.80	1.50	1.46	2.00	DB28@0.125 **	DB25@0.175	DB28@0.125 **	DB20@0.200
	12.00	Ø 400x400	8	2	16	13.00	2.80	1.50	1.60	2.00	DB28@0.10 **	DB25@0.175	DB28@0.10 **	DB20@0.200
15.00 M. SEISMIC LEVEL 2	9.00	Ø 400x400	7	2	14	10.00	2.80	1.50	1.37	2.00	DB25@0.125 **	DB25@0.175	DB25@0.125 **	DB20@0.200
	10.00	Ø 400x400	7	2	14	11.00	2.80	1.50	1.53	2.00	DB28@0.15 **	DB25@0.175	DB28@0.15 **	DB20@0.200
	11.00	Ø 400x400	8	2	16	12.00	2.80	1.50	1.46	2.00	DB28@0.125 **	DB25@0.175	DB28@0.125 **	DB20@0.200
	12.00	Ø 400x400	8	2	16	13.00	2.80	1.50	1.60	2.00	DB28@0.10 **	DB25@0.175	DB28@0.10 **	DB20@0.200

2.SPAN 20.00 M., HEIGHT ≤ 15.00 M.

2.1 DIMENSION OF SUBSTRUCTURE & REBAR OF COLUMN

Ln (M.)	W (M.)	NO.OF BOXBEAM (N_B)	DIMENSION (M.)							C (SIDEWALK WIDTH)		REBAR COLUMN					
			A	B	E	S	S1	S2	S3	SW=1.00 M.	SW=1.50 M.	D (M.)	CR1	CR2	ST3	CR3	ST4
20.00 M. SEISMIC LEVEL 1	9.00	11	11.00	6.80	2.10	1.00	2.20	4.60	1.00	1.00	1.50	1.10	24–DB25	24–DB25	DB12@0.15	24–DB25	DB12@0.30
	10.00	12	12.00	7.40	2.30	1.00	3.60	2.80	1.00	1.00	1.50	1.10	25–DB25	25–DB25	DB12@0.15	25–DB25	DB12@0.30
	11.00	13	13.00	8.00	2.50	1.00	4.00	3.00	1.00	1.00	1.50	1.20	26–DB25	26–DB25	DB12@0.15	26–DB25	DB12@0.30
	12.00	13	14.00	8.30	2.85	1.00	3.70	4.60	1.00	1.00	1.50	1.20	27–DB25	27–DB25	DB12@0.15	27–DB25	DB12@0.30
20.00 M. SEISMIC LEVEL 2	9.00	11	11.00	6.80	2.10	1.00	2.20	4.60	1.00	1.00	1.50	1.10	42–DB25	42–DB25	DB12@0.15	42–DB25	DB12@0.30
	10.00	12	12.00	7.40	2.30	1.00	3.60	2.80	1.00	1.00	1.50	1.10	46–DB25	46–DB25	DB12@0.15	46–DB25	DB12@0.30
	11.00	13	13.00	8.00	2.50	1.00	4.00	3.00	1.00	1.00	1.50	1.20	46–DB25	46–DB25	DB12@0.15	46–DB25	DB12@0.30
	12.00	13	14.00	8.30	2.85	1.00	3.70	4.60	1.00	1.00	1.50	1.20	47–DB25	47–DB25	DB12@0.15	47–DB25	DB12@0.30

2.2 REBAR OF CAP BEAM

Ln (M.)	W (M.)	b	h	SKEW 0–30 DEGREE						SKEW 31–45 DEGREE					
				T1	T2	B1	B2	ST1(STIRRUPS)	ST2(STIRRUPS)	T1	T2	B1	B2	ST1(STIRRUPS)	ST2(STIRRUPS)
20.00 M. SEISMIC LEVEL 1	9.00	1.30	1.20	18–DB25	–	18–DB25	–	4–DB12@0.15	4–DB12@0.20	18–DB25	–	18–DB25	–	4–DB12@0.15	4–DB12@0.20
	10.00	1.30	1.20	18–DB25	–	12–DB25	12–DB25	4–DB12@0.15	4–DB12@0.20	18–DB25	–	12–DB25	12–DB25	4–DB12@0.15	4–DB12@0.20
	11.00	1.40	1.20	18–DB25	–	13–DB25	13–DB25	5–DB12@0.15	4–DB12@0.20	18–DB25	–	13–DB25	13–DB25	5–DB12@0.15	4–DB12@0.20
	12.00	1.40	1.20	18–DB25	–	14–DB25	14–DB25	5–DB12@0.15	4–DB12@0.20	18–DB25	–	14–DB25	14–DB25	5–DB12@0.15	4–DB12@0.20
20.00 M. SEISMIC LEVEL 2	9.00	1.30	1.20	18–DB25	–	18–DB25	–	4–DB12@0.15	4–DB12@0.20	18–DB25	–	18–DB25	–	4–DB12@0.15	4–DB12@0.20
	10.00	1.30	1.20	18–DB25	–	12–DB25	12–DB25	4–DB12@0.15	4–DB12@0.20	18–DB25	–	12–DB25	12–DB25	4–DB12@0.15	4–DB12@0.20
	11.00	1.40	1.20	18–DB25	–	13–DB25	13–DB25	5–DB12@0.15	4–DB12@0.20	18–DB25	–	13–DB25	13–DB25	5–DB12@0.15	4–DB12@0.20
	12.00	1.40	1.20	18–DB25	–	14–DB25	14–DB25	5–DB12@0.15	4–DB12@0.20	18–DB25	–	14–DB25	14–DB25	5–DB12@0.15	4–DB12@0.20

2.3 FOUNDATION & PILE

Ln (M.)	W (M.)	PILE SIZING (MM.)	Nc1	Nc2	NO.OF PILE	FOOTING DIMENSION (M.)					BOTTOM REBAR		TOP REBAR	
						FL	FB	FD	f	g	BF1	BF2	TF1	TF2
20.00 M. SEISMIC LEVEL 1	9.00	Ø 400x400	8	2	16	10.00	2.80	1.50	1.17	2.00	DB25@0.125 **	DB25@0.175	DB25@0.125 **	DB20@0.200
	10.00	Ø 400x400	8	2	16	11.00	2.80	1.50	1.31	2.00	DB28@0.15 **	DB25@0.175	DB28@0.15 **	DB20@0.200
	11.00	Ø 400x400	9	2	18	12.50	2.80	1.50	1.34	2.00	DB28@0.125 **	DB25@0.175	DB28@0.125 **	DB20@0.200
	12.00	Ø 400x400	10	2	20	13.00	2.80	1.50	1.24	2.00	DB28@0.10 **	DB25@0.175	DB28@0.10 **	DB20@0.200
20.00 M. SEISMIC LEVEL 2	9.00	Ø 400x400	8	2	16	10.00	2.80	1.50	1.17	2.00	DB25@0.125 **	DB25@0.175	DB25@0.125 **	DB20@0.200
	10.00	Ø 400x400	8	2	16	11.00	2.80	1.50	1.31	2.00	DB28@0.15 **	DB25@0.175	DB28@0.15 **	DB20@0.200
	11.00	Ø 400x400	9	2	18	12.50	2.80	1.50	1.34	2.00	DB28@0.125 **	DB25@0.175	DB28@0.125 **	DB20@0.200
	12.00	Ø 400x400	10	2	20	13.00	2.80	1.50	1.24	2.00	DB28@0.10 **	DB25@0.175	DB28@0.10 **	DB20@0.200

REMARK ; ** = 2 LAYERS

NOTES :

1. ALL DIMENSIONS SHOWN ARE IN METERS UNLESS OTHERWISE INDICATED.
2. DESIGN LIVE LOAD : HL-93
3. A MINIMUM ULTIMATE COMPRESSIVE STRENGTH FOR A 150x150x150 MM. CUBE AT 28 DAYS AS FOLLOWS:
   A) FOR ABUTMENT AND WINGWALL 35 MPa. (357 KG/CM^2)
   B) FOR FOOTING 35 MPa. (357 KG/CM^2)
   C) FOR SIDEWALK AND BARRIER 35 MPa. (357 KG/CM^2)
4. REBAR SIZES SMALLER THAN 12 MM. SHALL BE TIS 20 GRADE SR 24 PLAIN ROUND BARS, OTHERS SHALL BE TIS 24 GRADE SD 40 DEFORMED BARS UNLESS OTHERWISE INDICATED.

REV.	REVISION	SIGNATURE	DATE
REV.1	REVISION 1/2018		JAN 2018

KINGDOM OF THAILAND

MINISTRY OF TRANSPORT

DEPARTMENT OF HIGHWAYS

STANDARD DRAWING

TWO COLUMNS PIER WITH SIDEWALK (FOR BOX BEAM)
ROADWAY WIDTH 9.00 – 12.00 M., 15.00 M.
AND 20.00 M. SPAN HEIGHT ≤ 15.00 M.

DESIGNED : D.O.H. & CONSULTANTS **CHECKED :** BUREAU OF LOCATION & DESIGN **DATE :** MAR 2018

SUBMITTED : (DIRECTOR OF LOCATION & DESIGN BUREAU) **SCALE :** AS SHOWN

APPROVED : (FOR DIRECTOR GENERAL) **DWG NO.** PC–226

SHEET NO. 286/R1

D:\20141103_Team Group\โปรเจค 2558\10P2045_STANDARD DRAWING DOH\Standard Drawing DOH_61.02.19\แก้ไขครั้งที่ 1\ENG\STANDARD FINAL-1-CAD(ENG)\STRUCTURAL WORK\Structural Work-Sec. 1 Bridge Span Not More Than 20.00 M\PC-226(REV01)

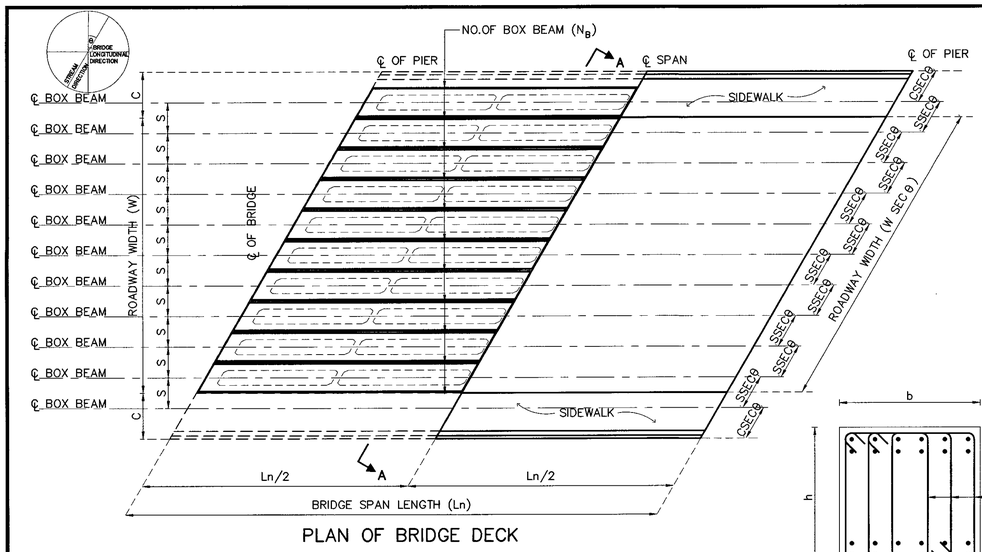

PLAN OF BRIDGE DECK

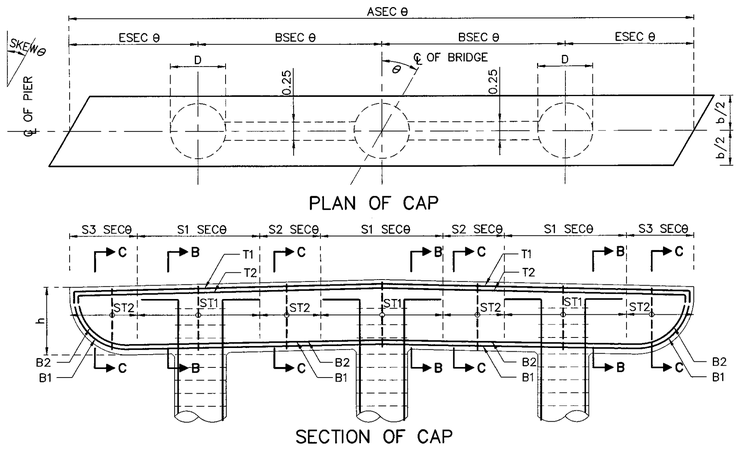

PLAN OF CAP

SECTION OF CAP

SECTION B–B

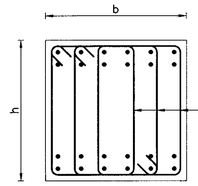

SECTION C–C

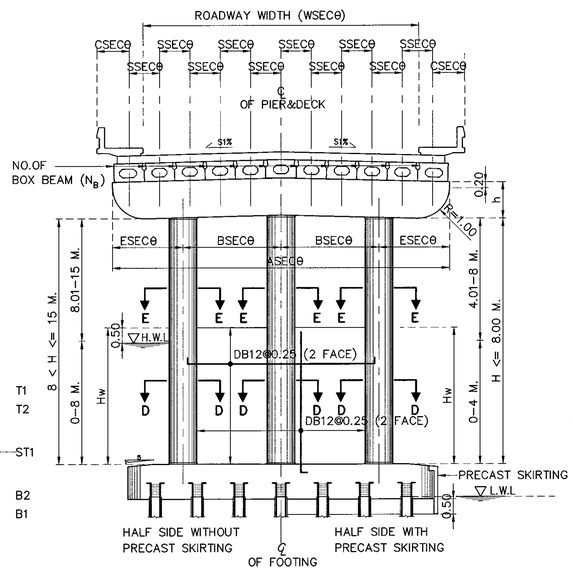

SECTION A–A

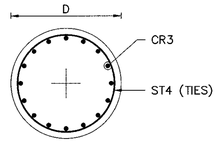

SECTION E–E

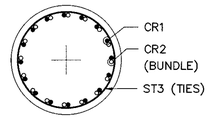

SECTION D–D

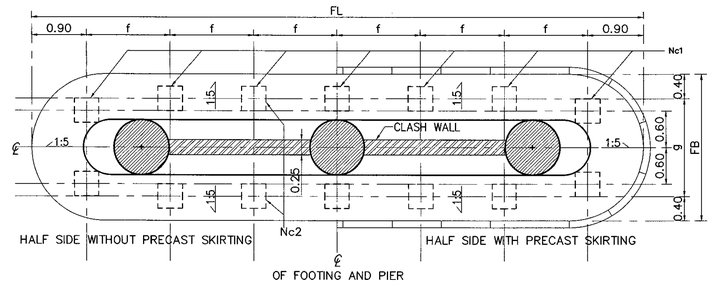

PLAN OF FOOTING

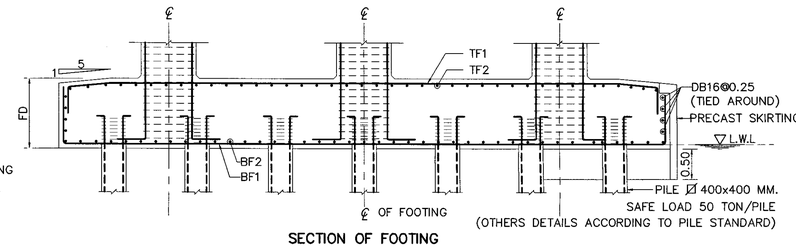

SECTION OF FOOTING

ADJUST LENGTH FOR SKEW BRIDGE

VALUE OF SECθ IN CASE OF SKEW BRIDGE (SKEW, θ)										
SKEW ANGLE, θ (DEGREE)	0	5	10	15	20	25	30	35	40	45
SEC θ	1.0000	1.0038	1.0154	1.0353	1.0642	1.1034	1.1547	1.2208	1.3054	1.4142

1.SPAN LENGTH 15.00 M., HEIGHT ≤ 15.00 M.

1.1 DIMENSION OF SUBSTRUCTURE & REBAR OF COLUMN

Ln (M.)	W (M.)	NO.OF BOXBEAM (N_B)	DIMENSION (M.)							C (SIDEWALK WIDTH)		REBAR COLUMN					
			A	B	E	S	S1	S2	S3	SW=1.00 M.	SW=1.50 M.	D (M.)	CR1	CR2	ST3	CR3	ST4
15.00 M. SEISMIC LEVEL 1	13.00	15	15.00	5.60	1.90	1.00	2.40	2.90	1.00	1.00	1.50	1.00	26–DB25	26–DB25	DB12@0.15	26–DB25	DB12@0.30
	14.00	16	16.00	5.80	2.20	1.00	2.60	3.10	1.00	1.00	1.50	1.00	27–DB25	27–DB25	DB12@0.15	27–DB25	DB12@0.30
	15.00	17	17.00	6.20	2.30	1.00	2.80	3.30	1.00	1.00	1.50	1.00	28–DB25	28–DB25	DB12@0.15	28–DB25	DB12@0.30
15.00 M. SEISMIC LEVEL 2	13.00	15	15.00	5.60	1.90	1.00	2.40	2.90	1.00	1.00	1.50	1.00	32–DB25	32–DB25	DB12@0.15	32–DB25	DB12@0.30
	14.00	16	16.00	5.80	2.20	1.00	2.60	3.10	1.00	1.00	1.50	1.00	34–DB25	34–DB25	DB12@0.15	34–DB25	DB12@0.30
	15.00	17	17.00	6.20	2.30	1.00	2.80	3.30	1.00	1.00	1.50	1.00	35–DB25	35–DB25	DB12@0.15	35–DB25	DB12@0.30

1.2 REBAR OF CAP BEAM

Ln (M.)	W (M.)	b	h	SKEW 0–30						SKEW 31–45					
				T1	T2	B1	B2	ST1(STIRRUPS)	ST2(STIRRUPS)	T1	T2	B1	B2	ST1(STIRRUPS)	ST2(STIRRUPS)
15.00 M. SEISMIC LEVEL 1	13.00	1.20	1.00	13–DB25	–	13–DB25	–	4–DB12@0.15	4–DB12@0.30	13–DB25	–	13–DB25	–	4–DB12@0.15	4–DB12@0.30
	14.00	1.20	1.00	14–DB25	–	14–DB25	–	4–DB12@0.15	4–DB12@0.30	14–DB25	–	14–DB25	–	4–DB12@0.15	4–DB12@0.30
	15.00	1.20	1.00	15–DB25	–	15–DB25	–	5–DB12@0.125	4–DB12@0.30	15–DB25	–	15–DB25	–	5–DB12@0.125	4–DB12@0.30
15.00 M. SEISMIC LEVEL 2	13.00	1.20	1.00	13–DB25	–	13–DB25	–	4–DB12@0.15	4–DB12@0.30	13–DB25	–	13–DB25	–	4–DB12@0.15	4–DB12@0.30
	14.00	1.20	1.00	14–DB25	–	14–DB25	–	4–DB12@0.15	4–DB12@0.30	14–DB25	–	14–DB25	–	4–DB12@0.15	4–DB12@0.30
	15.00	1.20	1.00	15–DB25	–	15–DB25	–	5–DB12@0.125	4–DB12@0.30	15–DB25	–	15–DB25	–	5–DB12@0.125	4–DB12@0.30

1.3 FOUNDATION & PILE

Ln (M.)	W (M.)	PILE SIZING (MM.)	Nc1	Nc2	NO.OF PILE	FOOTING DIMENSION (M.)					BOTTOM REBAR		TOP REBAR	
						FL	FB	FD	f	g	BF1	BF2	TF1	TF2
15.00 M. SEISMIC LEVEL 1	13.00	Ø 400x400	9	2	18	15.00	2.60	1.20	1.65	1.80	DB25@0.14	DB25@0.20	DB25@0.14	DB20@0.25
	14.00	Ø 400x400	9	2	18	15.00	2.60	1.20	1.65	1.80	DB25@0.13	DB25@0.20	DB25@0.13	DB20@0.25
	15.00	Ø 400x400	9	2	18	16.00	2.60	1.20	1.78	1.80	DB25@0.12	DB25@0.20	DB25@0.12	DB20@0.25
15.00 M. SEISMIC LEVEL 2	13.00	Ø 400x400	9	2	18	15.00	2.60	1.20	1.65	1.80	DB25@0.14	DB25@0.20	DB25@0.14	DB20@0.25
	14.00	Ø 400x400	9	2	18	15.00	2.60	1.20	1.65	1.80	DB25@0.13	DB25@0.20	DB25@0.13	DB20@0.25
	15.00	Ø 400x400	9	2	18	16.00	2.60	1.20	1.78	1.80	DB25@0.12	DB25@0.20	DB25@0.12	DB20@0.25

2.SPAN LENGTH 20.00 M., HEIGHT ≤ 15.00 M.

2.1 DIMENSION OF SUBSTRUCTURE & REBAR OF COLUMN

Ln (M.)	W (M.)	NO.OF BOXBEAM (N_B)	DIMENSION (M.)							C (SIDEWALK WIDTH)		REBAR COLUMN					
			A	B	E	S	S1	S2	S3	SW=1.00 M.	SW=1.50 M.	D (M.)	CR1	CR2	ST3	CR3	ST4
20.00 M. SEISMIC LEVEL 1	13.00	15	15.00	5.60	1.90	1.00	2.40	2.90	1.00	1.00	1.50	1.20	24–DB25	24–DB25	DB12@0.15	24–DB25	DB12@0.30
	14.00	16	16.00	5.80	2.20	1.00	2.60	3.10	1.00	1.00	1.50	1.20	25–DB25	25–DB25	DB12@0.15	25–DB25	DB12@0.30
	15.00	17	17.00	6.20	2.30	1.00	2.80	3.30	1.00	1.00	1.50	1.20	26–DB25	26–DB25	DB12@0.15	26–DB25	DB12@0.30
20.00 M. SEISMIC LEVEL 2	13.00	15	15.00	5.60	1.90	1.00	2.40	2.90	1.00	1.00	1.50	1.20	27–DB25	27–DB25	DB12@0.15	27–DB25	DB12@0.30
	14.00	16	16.00	5.80	2.20	1.00	2.60	3.10	1.00	1.00	1.50	1.20	28–DB25	28–DB25	DB12@0.15	28–DB25	DB12@0.30
	15.00	17	17.00	6.20	2.30	1.00	2.80	3.30	1.00	1.00	1.50	1.20	30–DB25	30–DB25	DB12@0.15	30–DB25	DB12@0.30

2.2 REBAR OF CAP BEAM

Ln (M.)	W (M.)	b	h	SKEW 0–30						SKEW 31–45					
				T1	T2	B1	B2	ST1(STIRRUPS)	ST2(STIRRUPS)	T1	T2	B1	B2	ST1(STIRRUPS)	ST2(STIRRUPS)
20.00 M. SEISMIC LEVEL 1	13.00	1.40	1.00	13–DB25	–	13–DB25	–	4–DB12@0.15	4–DB12@0.30	13–DB25	–	13–DB25	–	4–DB12@0.15	4–DB12@0.30
	14.00	1.40	1.00	14–DB25	–	14–DB25	–	4–DB12@0.15	4–DB12@0.20	14–DB25	–	14–DB25	–	4–DB12@0.15	4–DB12@0.20
	15.00	1.40	1.00	15–DB25	–	15–DB25	–	4–DB12@0.15	4–DB12@0.20	15–DB25	–	15–DB25	–	4–DB12@0.15	4–DB12@0.20
20.00 M. SEISMIC LEVEL 2	13.00	1.40	1.00	13–DB25	–	13–DB25	–	4–DB12@0.15	4–DB12@0.30	13–DB25	–	13–DB25	–	4–DB12@0.15	4–DB12@0.30
	14.00	1.40	1.00	14–DB25	–	14–DB25	–	4–DB12@0.15	4–DB12@0.20	14–DB25	–	14–DB25	–	4–DB12@0.15	4–DB12@0.20
	15.00	1.40	1.00	15–DB25	–	15–DB25	–	4–DB12@0.15	4–DB12@0.20	15–DB25	–	15–DB25	–	4–DB12@0.15	4–DB12@0.20

2.3 FOUNDATION & PILE

Ln (M.)	W (M.)	PILE SIZING (MM.)	Nc1	Nc2	NO.OF PILE	FOOTING DIMENSION (M.)					BOTTOM REBAR		TOP REBAR	
						FL	FB	FD	f	g	BF1	BF2	TF1	TF2
20.00 M. SEISMIC LEVEL 1	13.00	Ø 400x400	11	2	22	15.00	2.80	1.20	1.32	2.00	DB25@0.15	DB25@0.20	DB25@0.15	DB20@0.25
	14.00	Ø 400x400	11	2	22	15.00	2.80	1.20	1.32	2.00	DB25@0.14	DB25@0.20	DB25@0.14	DB20@0.25
	15.00	Ø 400x400	11	2	22	16.00	2.80	1.20	1.42	2.00	DB25@0.12	DB25@0.20	DB25@0.12	DB20@0.25
20.00 M. SEISMIC LEVEL 2	13.00	Ø 400x400	11	2	22	15.00	2.80	1.20	1.32	2.00	DB25@0.13	DB25@0.20	DB25@0.13	DB20@0.25
	14.00	Ø 400x400	11	2	22	15.00	2.80	1.20	1.32	2.00	DB25@0.12	DB25@0.20	DB25@0.12	DB20@0.25
	15.00	Ø 400x400	11	2	22	16.00	2.80	1.20	1.42	2.00	DB25@0.12	DB25@0.20	DB25@0.12	DB20@0.25

NOTE :
1. ALL DIMENSIONS SHOWN ARE IN METERS UNLESS OTHERWISE INDICATED
2. LIVE LOADING : VEHICLE LOAD HL–93
3. A MINIMUM ULTIMATE COMPRESSIVE STRENGTH FOR A 150X150X150 MM. CUBE AT 28 DAYS AS FOLLOWS :
   A) FOR COLUMN AND CAP BEAM 35 MPa
   B) FOR FOOTING 35 MPa
4. REBARS SMALLER THAN RB9 MM. SHALL BE TIS 20 GRADE SR 24 PLAIN ROUND BARS, OTHERS SHALL BE TIS 24 GRADE SD40 DEFORMED BARS UNLESS OTHERWISE INDICATED.

REF.	REVISION	SIGNATURE	DATE

KINGDOM OF THAILAND

MINISTRY OF TRANSPORT

DEPARTMENT OF HIGHWAYS

STANDARD DRAWING

THREE COLUMNS PIER WITH SIDEWALK (FOR BOX BEAM)
ROADWAY WIDTH 13.00 – 15.00 M., 15.00 M.
AND 20.00 M. SPAN, HEIGHT ≤ 15.00 M.

DESIGNED : D.O.H. & CONSULTANTS	CHECKED : BUREAU OF LOCATION & DESIGN	DATE : OCT 2015
SUBMITTED : (DIRECTOR OF LOCATION & DESIGN BUREAU)		SCALE : AS SHOWN
APPROVED : (FOR DIRECTOR GENERAL)		DWG NO. PC–227
		SHEET NO. 287

D:\std dwg 2015\PC-227(REV00)

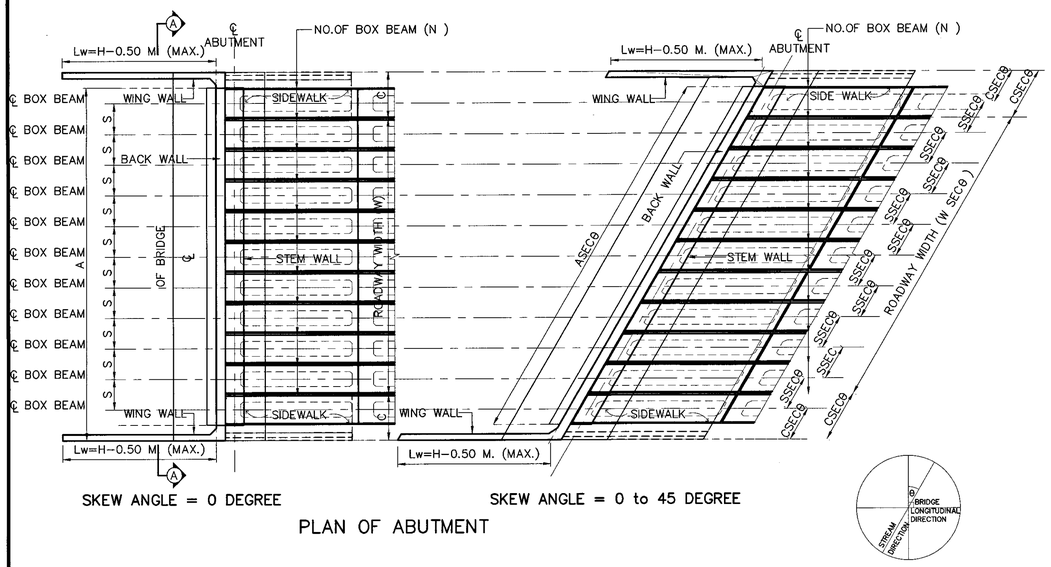

SKEW ANGLE = 0 DEGREE

SKEW ANGLE = 0 to 45 DEGREE

PLAN OF ABUTMENT

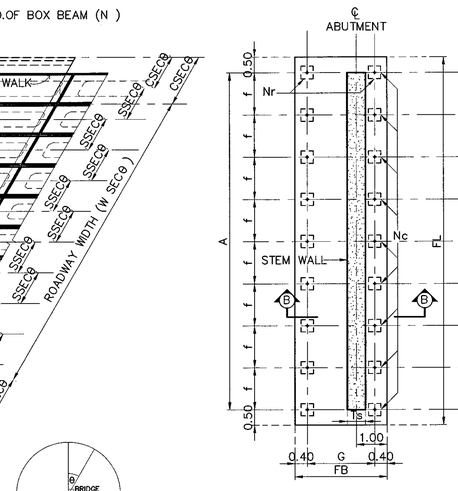

SKEW ANGLE = 0 DEGREE

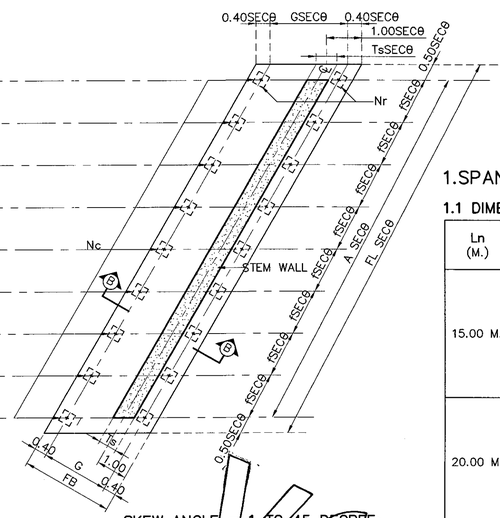

SKEW ANGLE = 1 TO 45 DEGREE

PLAN OF FOOTING

1.SPAN LENGTH 15.00 M. AND 20.00 M.

1.1 DIMENSION OF ABUTMENT

Ln (M.)	W (M.)	NO.OF BOXBEAM (N_B)	H(M.) (MAX)	DIMENSION (M.)					C (SIDE WALK WIDTH)	
				A	S	Hb	Hd	Ts	SW=1.00 M.	SW=1.50 M.
15.00 M.	9.00	11	5.50	11.00	1.00	0.73 *	4.77	0.60	1.00	1.50
	10.00	12	5.50	12.00	1.00	0.73 *	4.77	0.60	1.00	1.50
	11.00	13	5.50	13.00	1.00	0.73 *	4.77	0.60	1.00	1.50
	12.00	14	5.50	14.00	1.00	0.73 *	4.77	0.60	1.00	1.50
	13.00	15	5.50	15.00	1.00	0.73 *	4.77	0.60	1.00	1.50
	14.00	16	5.50	16.00	1.00	0.73 *	4.77	0.60	1.00	1.50
	15.00	17	5.50	17.00	1.00	0.73 *	4.77	0.60	1.00	1.50
20.00 M.	9.00	11	5.50	11.00	1.00	0.83 *	4.67	0.60	1.00	1.50
	10.00	12	5.50	12.00	1.00	0.83 *	4.67	0.60	1.00	1.50
	11.00	13	5.50	13.00	1.00	0.83 *	4.67	0.60	1.00	1.50
	12.00	14	5.50	14.00	1.00	0.83 *	4.67	0.60	1.00	1.50
	13.00	15	5.50	15.00	1.00	0.83 *	4.67	0.60	1.00	1.50
	14.00	16	5.50	16.00	1.00	0.83 *	4.67	0.60	1.00	1.50
	15.00	17	5.50	17.00	1.00	0.83 *	4.67	0.60	1.00	1.50

REMARK ; * = DEPENDS ON DEPTH OF GIRDER

Void

1.2 REBAR IN ABUTMENT

Ln (M.)	W (M.)	SKEW 0–45 DEGREE									
		V1	V2	V3	V4	V5	S1	S2	S3	S4	S5
15.00 M.	9.00–15.00	DB20@0.20	DB20@0.20	DB16@0.20	DB20@0.10	DB16@0.20	DB16@0.20	DB16@0.20	DB16@0.20	DB16@0.20	DB16@0.20
20.00 M.	9.00–15.00	DB20@0.20	DB20@0.20	DB16@0.20	DB20@0.10	DB16@0.20	DB16@0.20	DB16@0.20	DB16@0.20	DB16@0.20	DB16@0.20

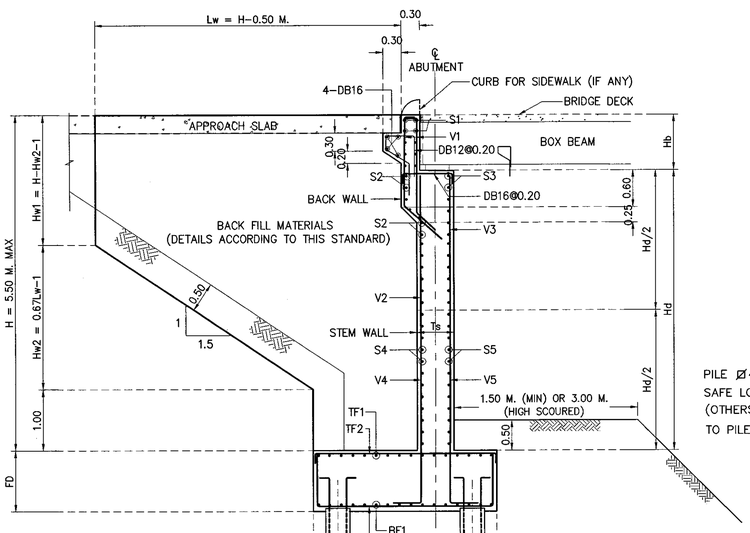

SECTION B–B

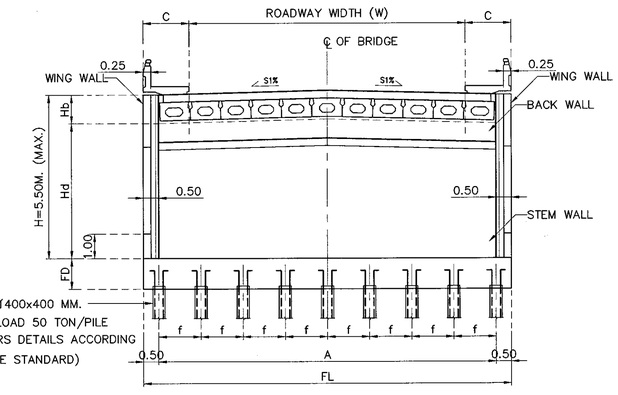

SECTION A–A

1.3 FOUNDATION & PILE

Ln (M.)	W (M.)	PILE SIZING (MM.)	Nc	Nr	NO.OF PILE	FOOTING DIMENSION (M.)					BOTTOM REBAR		TOP REBAR	
						FL	FB	FD	f	G	BF1	BF2	TF1	TF2
15.00 M.	9.00	Ø 400x400	10	2	20	12.00	3.50	1.00	1.24	2.70	DB20@0.15	DB25@0.13	DB20@0.30	DB20@0.30
	10.00	Ø 400x400	10	2	20	13.00	3.50	1.00	1.36	2.70	DB20@0.15	DB25@0.13	DB20@0.30	DB20@0.30
	11.00	Ø 400x400	11	2	22	14.00	3.50	1.00	1.32	2.70	DB20@0.15	DB25@0.13	DB20@0.30	DB20@0.30
	12.00	Ø 400x400	12	2	24	15.00	3.50	1.00	1.29	2.70	DB20@0.15	DB25@0.13	DB20@0.30	DB20@0.30
	13.00	Ø 400x400	13	2	26	16.00	3.50	1.00	1.27	2.70	DB20@0.15	DB25@0.13	DB20@0.30	DB20@0.30
	14.00	Ø 400x400	13	2	26	17.00	3.50	1.00	1.35	2.70	DB20@0.15	DB25@0.13	DB20@0.30	DB20@0.30
	15.00	Ø 400x400	14	2	28	18.00	3.50	1.00	1.32	2.70	DB20@0.15	DB25@0.13	DB20@0.30	DB20@0.30
20.00 M.	9.00	Ø 525x525	7	2	14	12.00	3.50	1.00	1.87	2.70	DB20@0.15	DB25@0.12	DB20@0.30	DB20@0.30
	10.00	Ø 525x525	8	2	16	13.00	3.50	1.00	1.74	2.70	DB20@0.15	DB25@0.12	DB20@0.30	DB20@0.30
	11.00	Ø 525x525	9	2	18	14.00	3.50	1.00	1.65	2.70	DB20@0.15	DB25@0.12	DB20@0.30	DB20@0.30
	12.00	Ø 525x525	9	2	18	15.00	3.50	1.00	1.78	2.70	DB20@0.15	DB25@0.12	DB20@0.30	DB20@0.30
	13.00	Ø 525x525	9	2	18	16.00	3.50	1.00	1.90	2.70	DB20@0.15	DB25@0.12	DB20@0.30	DB20@0.30
	14.00	Ø 525x525	10	2	20	17.00	3.50	1.00	1.80	2.70	DB20@0.15	DB25@0.12	DB20@0.30	DB20@0.30
	15.00	Ø 525x525	10	2	20	18.00	3.50	1.00	1.91	2.70	DB20@0.15	DB25@0.12	DB20@0.30	DB20@0.30

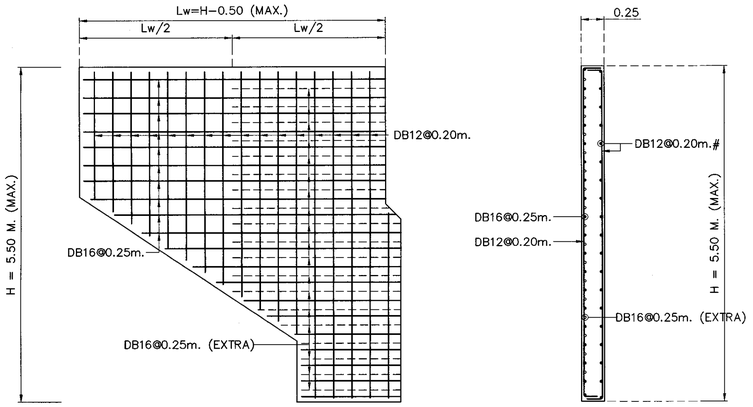

SECTION C–C

SECTION D–D

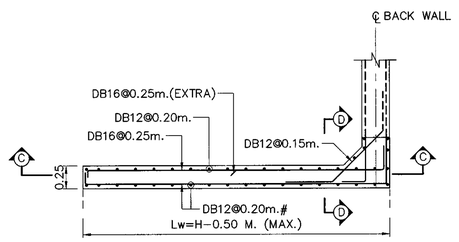

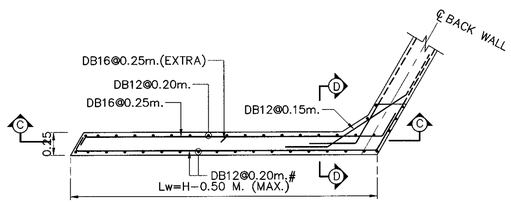

1.4 ADJUST LENGHT FOR SKEW BRIDGE

	VALUE OF SEC θ IN CASE OF SKEW BRIDGE (SKEW, θ)									
SKEW ANGLE, θ (DEGREE)	0	5	10	15	20	25	30	35	40	45
SEC θ	1.0000	1.0038	1.0154	1.0353	1.0642	1.1034	1.1547	1.2208	1.3054	1.4142

NOTE :
1. ALL DIMENSIONS SHOWN ARE IN METERS UNLESS OTHERWISE INDICATED
2. LIVE LOADING : VEHICLE LOAD HL–93
3. A MINIMUM ULTIMATE COMPRESSIVE STRENGTH FOR A 150X150X150 MM. CUBE AT 28 DAYS AS FOLLOWS :
   A) FOR ABUTMENT/WINGWALL 35 MPa
   B) FOR FOOTING 35 MPa
4. REBARS SMALLER THAN RB9 MM. SHALL BE TIS 20 GRADE SR 24 PLAIN ROUND BARS, OTHERS SHALL BE TIS 24 GRADE SD40 DEFORMED BARS UNLESS OTHERWISE INDICATED.

REF.	REVISION	SIGNATURE	DATE

KINGDOM OF THAILAND
MINISTRY OF TRANSPORT
DEPARTMENT OF HIGHWAYS

STANDARD DRAWING
ABUTMENT WITH SIDEWALK (FOR BOX BEAM)
ROADWAY WIDTH 9.00 – 15.00 M., 15.00 M.
AND 20.00 M. SPAN, HEIGHT ≤ 5.50 M.

DESIGNED : D.O.H. & CONSULTANTS
CHECKED : BUREAU OF LOCATION & DESIGN
DATE : OCT 2015
SUBMITTED : (DIRECTOR OF LOCATION & DESIGN BUREAU)
SCALE : AS SHOWN
APPROVED : (FOR DIRECTOR GENERAL)
DWG NO. PC–228
SHEET NO. 288

D:\std dwg 2015\PC-228(REV00)

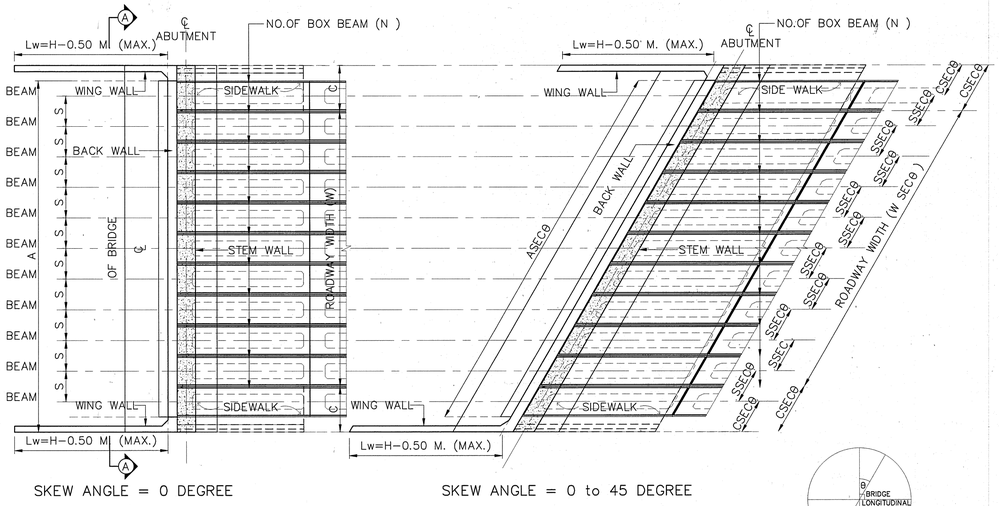

SKEW ANGLE = 0 DEGREE SKEW ANGLE = 0 to 45 DEGREE

PLAN OF ABUTMENT

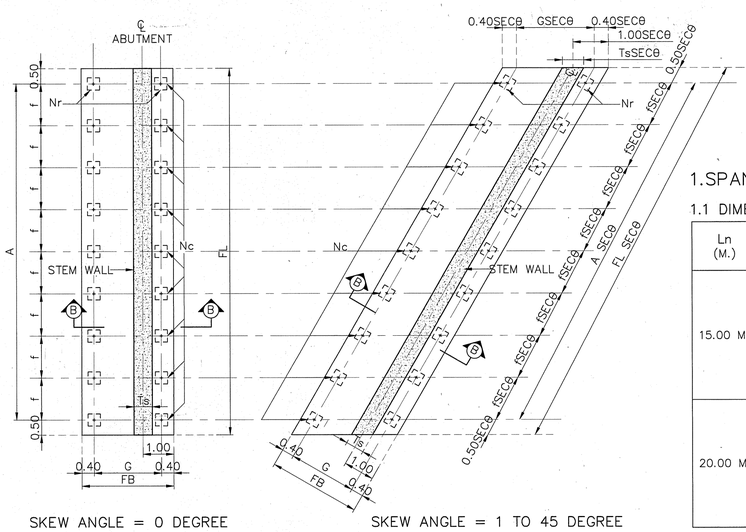

SKEW ANGLE = 0 DEGREE SKEW ANGLE = 1 TO 45 DEGREE

PLAN OF FOOTING

1.SPAN LENGTH 15.00 M. AND 20.00 M.

1.1 DIMENSION OF ABUTMENT

Ln (M.)	W (M.)	NO.OF BOXBEAM (N_B)	H(M.) (MAX)	DIMENSION (M.)					C (SIDE WALK WIDTH)	
				A	S	Hb	Hd	Ts	SW=1.00 M.	SW=1.50 M.
15.00 M.	9.00	11	5.50	11.00	1.00	0.73 *	4.77	0.60	1.00	1.50
	10.00	12	5.50	12.00	1.00	0.73 *	4.77	0.60	1.00	1.50
	11.00	13	5.50	13.00	1.00	0.73 *	4.77	0.60	1.00	1.50
	12.00	14	5.50	14.00	1.00	0.73 *	4.77	0.60	1.00	1.50
	13.00	15	5.50	15.00	1.00	0.73 *	4.77	0.60	1.00	1.50
	14.00	16	5.50	16.00	1.00	0.73 *	4.77	0.60	1.00	1.50
	15.00	17	5.50	17.00	1.00	0.73 *	4.77	0.60	1.00	1.50
20.00 M.	9.00	11	5.50	11.00	1.00	0.83 *	4.67	0.60	1.00	1.50
	10.00	12	5.50	12.00	1.00	0.83 *	4.67	0.60	1.00	1.50
	11.00	13	5.50	13.00	1.00	0.83 *	4.67	0.60	1.00	1.50
	12.00	14	5.50	14.00	1.00	0.83 *	4.67	0.60	1.00	1.50
	13.00	15	5.50	15.00	1.00	0.83 *	4.67	0.60	1.00	1.50
	14.00	16	5.50	16.00	1.00	0.83 *	4.67	0.60	1.00	1.50
	15.00	17	5.50	17.00	1.00	0.83 *	4.67	0.60	1.00	1.50

REMARK ; * = DEPENDS ON DEPTH OF GIRDER

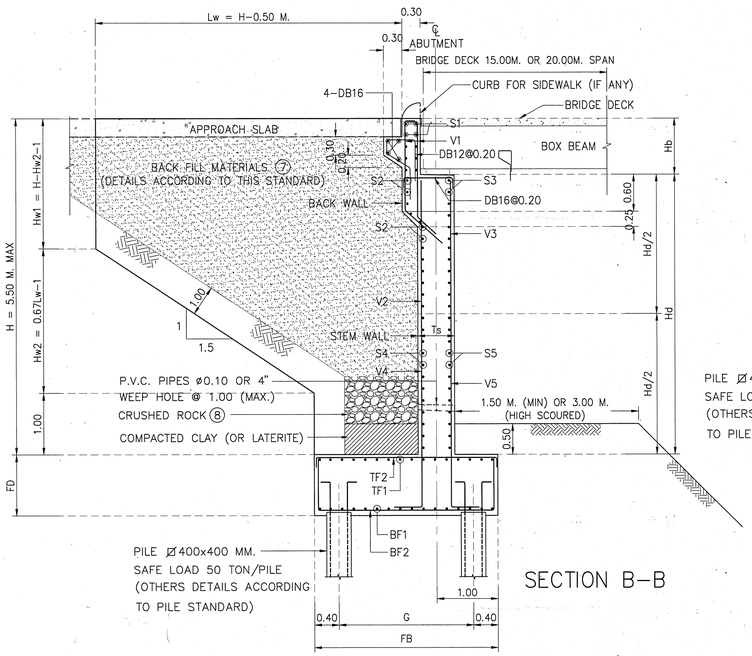

SECTION B−B

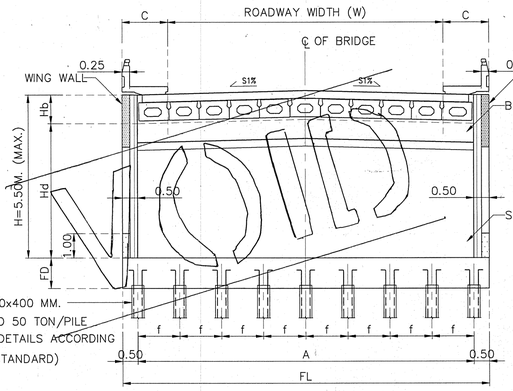

SECTION A−A

1.2 REBAR IN ABUTMENT

Ln (M.)	W (M.)	SKEW 0−45 DEGREE									
		V1	V2	V3	V4	V5	S1	S2	S3	S4	S5
15.00 M.	9.00−15.00	DB20@0.20	DB20@0.20	DB16@0.20	DB20@0.10	DB16@0.20	DB16@0.20	DB16@0.20	DB16@0.20	DB16@0.20	DB16@0.20
20.00 M.	9.00−15.00	DB20@0.20	DB20@0.20	DB16@0.20	DB20@0.10	DB16@0.20	DB16@0.20	DB16@0.20	DB16@0.20	DB16@0.20	DB16@0.20

1.3 FOUNDATION & PILE

Ln (M.)	W (M.)	PILE SIZING (MM.)	Nc	Nr	NO.OF PILE	FOOTING DIMENSION (M.)					BOTTOM REBAR		TOP REBAR	
						FL	FB	FD	f	G	BF1	BF2	TF1	TF2
15.00 M.	9.00	⊠ 400x400	10	2	20	12.00	3.50	1.00	1.24	2.70	DB20@0.15	DB25@0.13	DB20@0.30	DB20@0.30
	10.00	⊠ 400x400	10	2	20	13.00	3.50	1.00	1.36	2.70	DB20@0.15	DB25@0.13	DB20@0.30	DB20@0.30
	11.00	⊠ 400x400	11	2	22	14.00	3.50	1.00	1.32	2.70	DB20@0.15	DB25@0.13	DB20@0.30	DB20@0.30
	12.00	⊠ 400x400	12	2	24	15.00	3.50	1.00	1.29	2.70	DB20@0.15	DB25@0.13	DB20@0.30	DB20@0.30
	13.00	⊠ 400x400	13	2	26	16.00	3.50	1.00	1.27	2.70	DB20@0.15	DB25@0.13	DB20@0.30	DB20@0.30
	14.00	⊠ 400x400	13	2	26	17.00	3.50	1.00	1.35	2.70	DB20@0.15	DB25@0.13	DB20@0.30	DB20@0.30
	15.00	⊠ 400x400	14	2	28	18.00	3.50	1.00	1.32	2.70	DB20@0.15	DB25@0.13	DB20@0.30	DB20@0.30
20.00 M.	9.00	⊠ 525x525	7	2	14	12.00	3.50	1.00	1.87	2.70	DB20@0.15	DB25@0.12	DB20@0.30	DB20@0.30
	10.00	⊠ 525x525	8	2	16	13.00	3.50	1.00	1.74	2.70	DB20@0.15	DB25@0.12	DB20@0.30	DB20@0.30
	11.00	⊠ 525x525	9	2	18	14.00	3.50	1.00	1.65	2.70	DB20@0.15	DB25@0.12	DB20@0.30	DB20@0.30
	12.00	⊠ 525x525	9	2	18	15.00	3.50	1.00	1.78	2.70	DB20@0.15	DB25@0.12	DB20@0.30	DB20@0.30
	13.00	⊠ 525x525	9	2	18	16.00	3.50	1.00	1.90	2.70	DB20@0.15	DB25@0.12	DB20@0.30	DB20@0.30
	14.00	⊠ 525x525	10	2	20	17.00	3.50	1.00	1.80	2.70	DB20@0.15	DB25@0.12	DB20@0.30	DB20@0.30
	15.00	⊠ 525x525	10	2	20	18.00	3.50	1.00	1.91	2.70	DB20@0.15	DB25@0.12	DB20@0.30	DB20@0.30

1.4 ADJUST LENGHT FOR SKEW BRIDGE

SKEW ANGLE, θ (DEGREE)	VALUE OF SEC θ IN CASE OF SKEW BRIDGE (SKEW, θ)									
	0	5	10	15	20	25	30	35	40	45
SEC θ	1.0000	1.0038	1.0154	1.0353	1.0642	1.1034	1.1547	1.2208	1.3054	1.4142

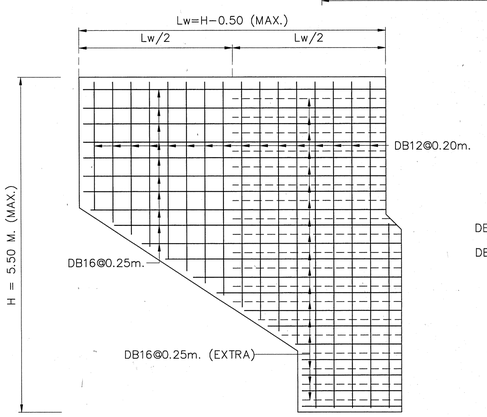

SECTION C−C

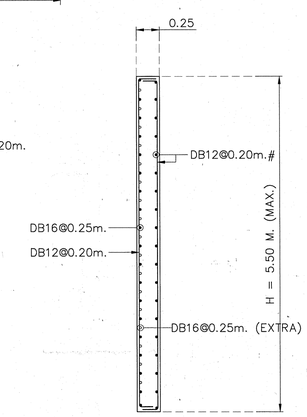

SECTION D−D

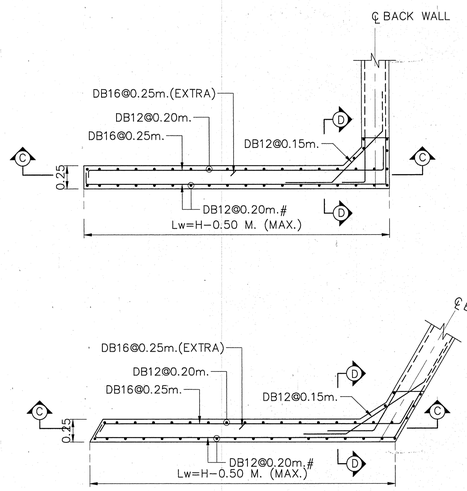

NOTES :

1. ALL DIMENSIONS SHOWN ARE IN METERS UNLESS OTHERWISE INDICATED.
2. DESIGN LIVE LOAD : HL−93
3. A MINIMUM ULTIMATE COMPRESSIVE STRENGTH FOR A 150x150x150 MM. CUBE AT 28 DAYS AS FOLLOWS:
   A) FOR ABUTMENT AND WINGWALL 35 MPa. (357 KG/CM^2)
   B) FOR FOOTING 35 MPa. (357 KG/CM^2)
   C) FOR SIDEWALK AND BARRIER 35 MPa. (357 KG/CM^2)
4. REBAR SIZES SMALLER THAN 12 MM. SHALL BE TIS 20 GRADE SR 24 PLAIN ROUND BARS, OTHERS SHALL BE TIS 24 GRADE SD 40 DEFORMED BARS UNLESS OTHERWISE INDICATED.
5. R = 0.50 M. FOR THE BRIDGE WITHOUT SIDEWALK (P = 0.00). FOR THE BRIDGE WITH SIDEWALK OF P = 0.50 AND 1.00, R = 0.50 M. AND 1.00 M., RESPECTIVELY.
6. EACH SPREAD FOOTING SHALL BE LOCATED BELOW TO A DEPTH WHERE SCOUR WILL NOT AFFECT CAPACITY, THE MINIMUM ALLOWABLE BEARING CAPACITY OF 0.30 MPa (30 TON/M^2)
7. POROUS BACKFILL AND CRUSHED ROCK MATERIALS SHALL BE SUBMITTED FOR APPROVAL
8. 1" CRUSHED ROCK OR 1" GRAVEL FILL ALONG THE WALL.

KINGDOM OF THAILAND

MINISTRY OF TRANSPORT

DEPARTMENT OF HIGHWAYS

STANDARD DRAWING

ABUTMENT WITH SIDEWALK (FOR BOX BEAM)
ROADWAY WIDTH 9.00 − 15.00 M., 15.00 M.
AND 20.00 M. SPAN, HEIGHT ≤ 5.50 M.

DESIGNED : D.O.H. & CONSULTANTS	**CHECKED :** BUREAU OF LOCATION & DESIGN		**DATE :** MAR 2018
SUBMITTED : (DIRECTOR OF LOCATION & DESIGN BUREAU)			**SCALE :** AS SHOWN
APPROVED : (FOR DIRECTOR GENERAL)			**DWG NO.** PC−228
			SHEET NO. 288/R1

REV.	REVISION	SIGNATURE	DATE
REV.1	REVISION 1/2018		JAN 2018

D:\20141103_Team Group\โ 2558\10P2045_STANDARD DRAWING DOH\Standard Drawing DOH_61.02.19\แปลงที่ 1\(แบบ)_Revision 1.2017−JAN2018\ENG\STANDARD_FINAL−1−CAD(ENG)\STRUCTURAL WORK\Structural Work−Sec. 1 Bridge Span Not More Than 20.00 M\PC−228(REV01)

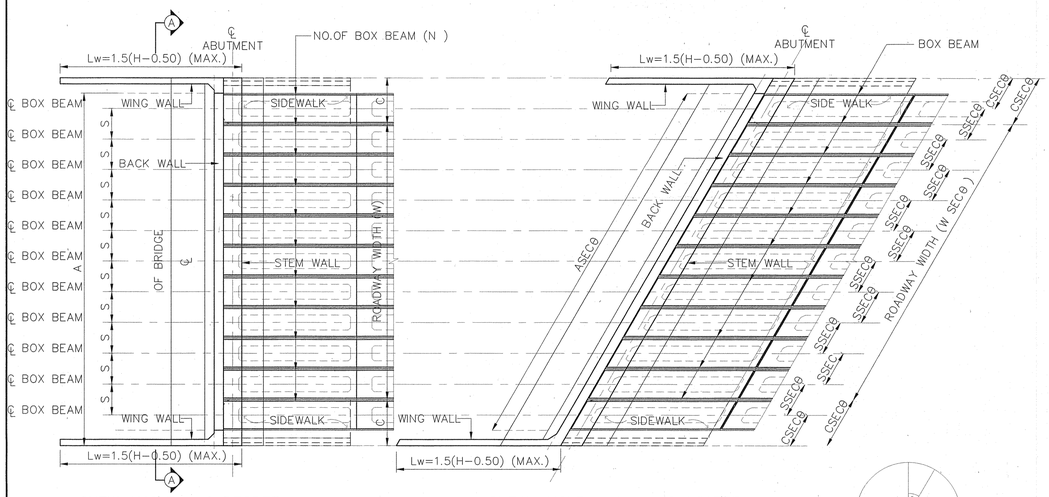

SKEW ANGLE = 0 DEGREE

SKEW ANGLE = 0 to 45 DEGREE

PLAN OF ABUTMENT

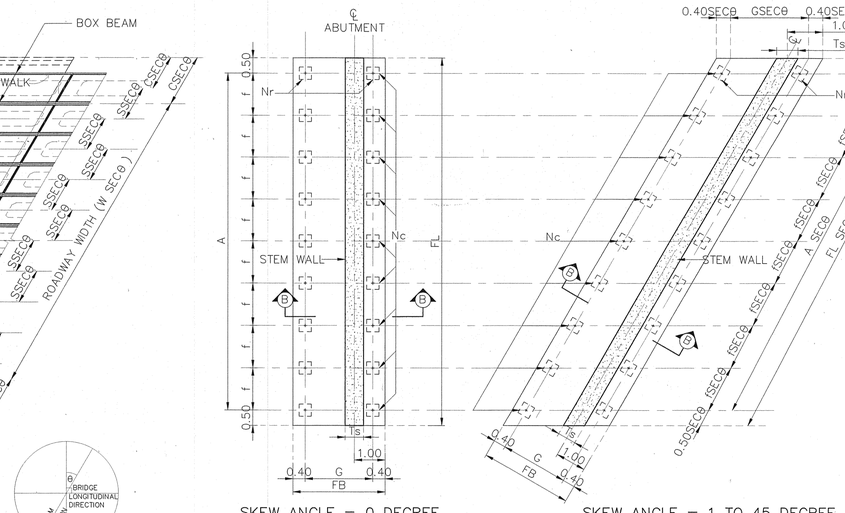

SKEW ANGLE = 0 DEGREE

SKEW ANGLE = 1 TO 45 DEGREE

PLAN OF FOOTING

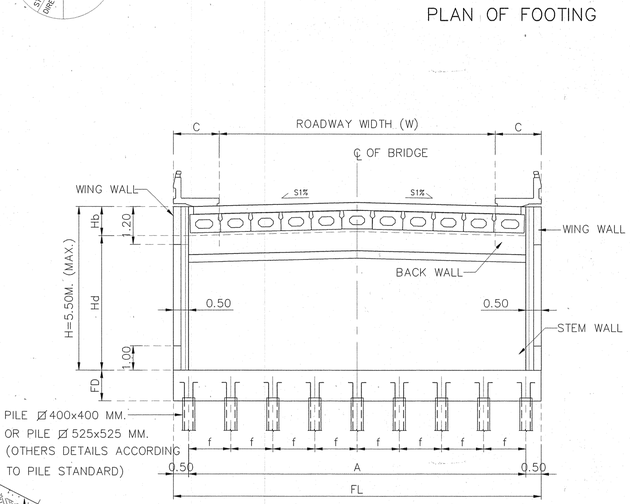

SECTION A−A

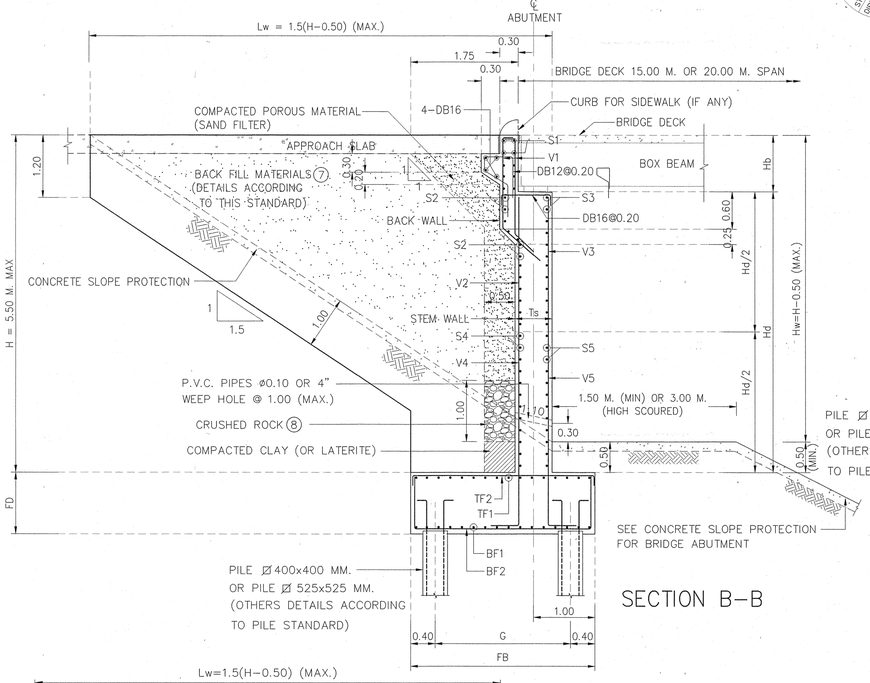

SECTION B−B

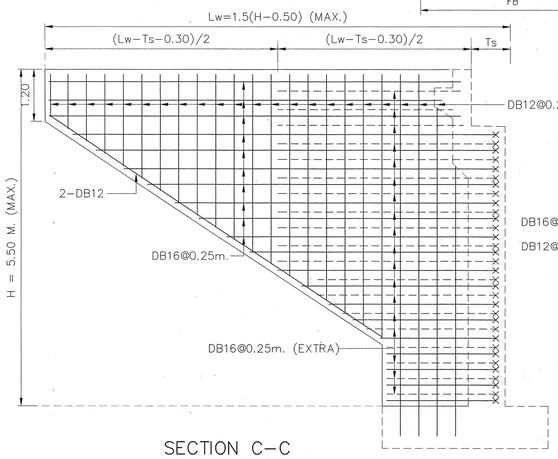

SECTION C−C

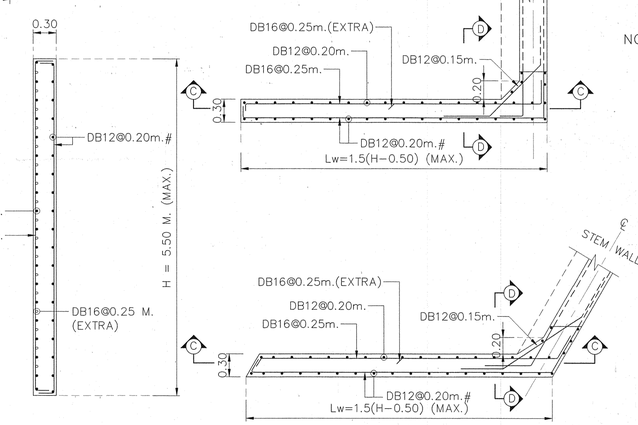

SECTION D−D

1.SPAN LENGTH 15.00 M. AND 20.00 M.

1.1 DIMENSION OF ABUTMENT

Ln (M.)	W (M.)	NO.OF BOXBEAM (N_B)	H(M.) (MAX)	DIMENSION (M.)					C (SIDE WALK WIDTH)	
				A	S	Hb	Hd	Ts	SW=1.00 M.	SW=1.50 M.
15.00 M.	9.00	11	5.50	11.00	1.00	0.73 *	4.77	0.60	1.00	1.50
	10.00	12	5.50	12.00	1.00	0.73 *	4.77	0.60	1.00	1.50
	11.00	13	5.50	13.00	1.00	0.73 *	4.77	0.60	1.00	1.50
	12.00	14	5.50	14.00	1.00	0.73 *	4.77	0.60	1.00	1.50
	13.00	15	5.50	15.00	1.00	0.73 *	4.77	0.60	1.00	1.50
	14.00	16	5.50	16.00	1.00	0.73 *	4.77	0.60	1.00	1.50
	15.00	17	5.50	17.00	1.00	0.73 *	4.77	0.60	1.00	1.50
20.00 M.	9.00	11	5.50	11.00	1.00	0.83 *	4.67	0.60	1.00	1.50
	10.00	12	5.50	12.00	1.00	0.83 *	4.67	0.60	1.00	1.50
	11.00	13	5.50	13.00	1.00	0.83 *	4.67	0.60	1.00	1.50
	12.00	14	5.50	14.00	1.00	0.83 *	4.67	0.60	1.00	1.50
	13.00	15	5.50	15.00	1.00	0.83 *	4.67	0.60	1.00	1.50
	14.00	16	5.50	16.00	1.00	0.83 *	4.67	0.60	1.00	1.50
	15.00	17	5.50	17.00	1.00	0.83 *	4.67	0.60	1.00	1.50

REMARK ; * = DEPENDS ON DEPTH OF GIRDER

1.2 REBAR IN ABUTMENT

Ln (M.)	W (M.)	SKEW 0−45 DEGREE									
		V1	V2	V3	V4	V5	S1	S2	S3	S4	S5
15.00 M.	9.00−15.00	DB20@0.20	DB20@0.20	DB16@0.20	DB20@0.10	DB16@0.20	DB16@0.20	DB16@0.20	DB16@0.20	DB16@0.20	DB16@0.20
20.00 M.	9.00−15.00	DB20@0.20	DB20@0.20	DB16@0.20	DB20@0.10	DB16@0.20	DB16@0.20	DB16@0.20	DB16@0.20	DB16@0.20	DB16@0.20

1.3 FOUNDATION & PILE

Ln (M.)	W (M.)	PILE SIZING (MM.)	Nc	Nr	NO.OF PILE	FOOTING DIMENSION (M.)					BOTTOM REBAR		TOP REBAR	
						FL	FB	FD	f	G	BF1	BF2	TF1	TF2
15.00 M.	9.00	Ø 400x400	10	2	20	12.00	3.50	1.00	1.24	2.70	DB20@0.15	DB25@0.13	DB20@0.30	DB20@0.30
	10.00	Ø 400x400	10	2	20	13.00	3.50	1.00	1.36	2.70	DB20@0.15	DB25@0.13	DB20@0.30	DB20@0.30
	11.00	Ø 400x400	11	2	22	14.00	3.50	1.00	1.32	2.70	DB20@0.15	DB25@0.13	DB20@0.30	DB20@0.30
	12.00	Ø 400x400	12	2	24	15.00	3.50	1.00	1.29	2.70	DB20@0.15	DB25@0.13	DB20@0.30	DB20@0.30
	13.00	Ø 400x400	13	2	26	16.00	3.50	1.00	1.27	2.70	DB20@0.15	DB25@0.13	DB20@0.30	DB20@0.30
	14.00	Ø 400x400	13	2	26	17.00	3.50	1.00	1.35	2.70	DB20@0.15	DB25@0.13	DB20@0.30	DB20@0.30
	15.00	Ø 400x400	14	2	28	18.00	3.50	1.00	1.32	2.70	DB20@0.15	DB25@0.13	DB20@0.30	DB20@0.30
20.00 M.	9.00	Ø 525x525	7	2	14	12.00	3.50	1.00	1.87	2.70	DB20@0.15	DB25@0.12	DB20@0.30	DB20@0.30
	10.00	Ø 525x525	8	2	16	13.00	3.50	1.00	1.74	2.70	DB20@0.15	DB25@0.12	DB20@0.30	DB20@0.30
	11.00	Ø 525x525	9	2	18	14.00	3.50	1.00	1.65	2.70	DB20@0.15	DB25@0.12	DB20@0.30	DB20@0.30
	12.00	Ø 525x525	9	2	18	15.00	3.50	1.00	1.78	2.70	DB20@0.15	DB25@0.12	DB20@0.30	DB20@0.30
	13.00	Ø 525x525	9	2	18	16.00	3.50	1.00	1.90	2.70	DB20@0.15	DB25@0.12	DB20@0.30	DB20@0.30
	14.00	Ø 525x525	10	2	20	17.00	3.50	1.00	1.80	2.70	DB20@0.15	DB25@0.12	DB20@0.30	DB20@0.30
	15.00	Ø 525x525	10	2	20	18.00	3.50	1.00	1.91	2.70	DB20@0.15	DB25@0.12	DB20@0.30	DB20@0.30

1.4 ADJUST LENGHT FOR SKEW BRIDGE

SKEW ANGLE, θ (DEGREE)	VALUE OF SEC θ IN CASE OF SKEW BRIDGE (SKEW, θ)									
	0	5	10	15	20	25	30	35	40	45
SEC θ	1.0000	1.0038	1.0154	1.0353	1.0642	1.1034	1.1547	1.2208	1.3054	1.4142

NOTES :

1. ALL DIMENSIONS SHOWN ARE IN METERS UNLESS OTHERWISE INDICATED.
2. DESIGN LIVE LOAD : HL−93
3. A MINIMUM ULTIMATE COMPRESSIVE STRENGTH FOR A 150x150x150 MM. CUBE AT 28 DAYS AS FOLLOWS:
   A) FOR ABUTMENT AND WINGWALL 35 MPa. (357 KG/CM^2)
   B) FOR FOOTING 35 MPa. (357 KG/CM^2)
   C) FOR SIDEWALK AND BARRIER 35 MPa. (357 KG/CM^2)
4. REBAR SIZES SMALLER THAN 12 MM. SHALL BE TIS 20 GRADE SR 24 PLAIN ROUND BARS, OTHERS SHALL BE TIS 24 GRADE SD 40 DEFORMED BARS UNLESS OTHERWISE INDICATED.
5. R = 0.50 M. FOR THE BRIDGE WITHOUT SIDEWALK (P = 0.00). FOR THE BRIDGE WITH SIDEWALK OF P = 0.50 AND 1.00, R = 0.50 M. AND 1.00 M., RESPECTIVELY.
6. EACH SPREAD FOOTING SHALL BE LOCATED BELOW TO A DEPTH WHERE SCOUR WILL NOT AFFECT CAPACITY, THE MINIMUM ALLOWABLE BEARING CAPACITY OF 0.30 MPa (30 TON/M^2)
7. POROUS BACKFILL AND CRUSHED ROCK MATERIALS SHALL BE SUBMITTED FOR APPROVAL
8. 1" CRUSHED ROCK OR 1" GRAVEL FILL ALONG THE WALL.

REV.	REVISION	SIGNATURE	DATE
REV.2	REVISION 2/2021		JAN 2021
REV.1	REVISION 1/2018		JAN 2018

KINGDOM OF THAILAND

MINISTRY OF TRANSPORT

DEPARTMENT OF HIGHWAYS

STANDARD DRAWING

ABUTMENT WITH SIDEWALK (FOR BOX BEAM)
ROADWAY WIDTH 9.00 − 15.00 M., 15.00 M.
AND 20.00 M. SPAN, HEIGHT ≤ 5.50 M.

DESIGNED : D.O.H. & CONSULTANTS **CHECKED :** BUREAU OF LOCATION & DESIGN **DATE :** OCT 2015

SUBMITTED : (DIRECTOR OF LOCATION & DESIGN BUREAU) **SCALE :** AS SHOWN

APPROVED : (FOR DIRECTOR GENERAL) **DWG NO.** PC−228

SHEET NO. 288/R2

SECTION 2) BRIDGE ACCESSORIES

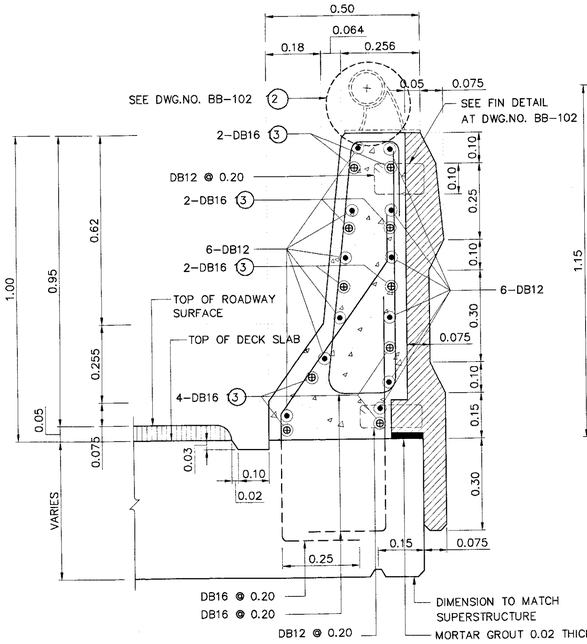

TRAFFIC BARRIER TYPE 1
SCALE 1 : 10

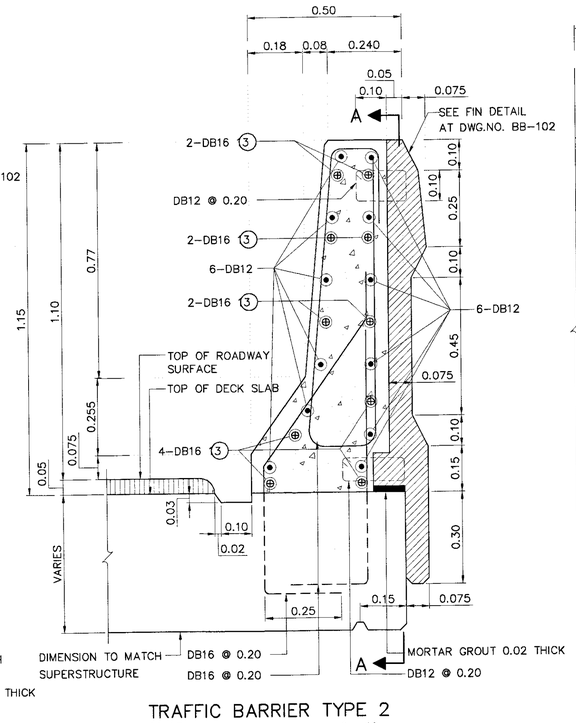

TRAFFIC BARRIER TYPE 2
SCALE 1 : 10

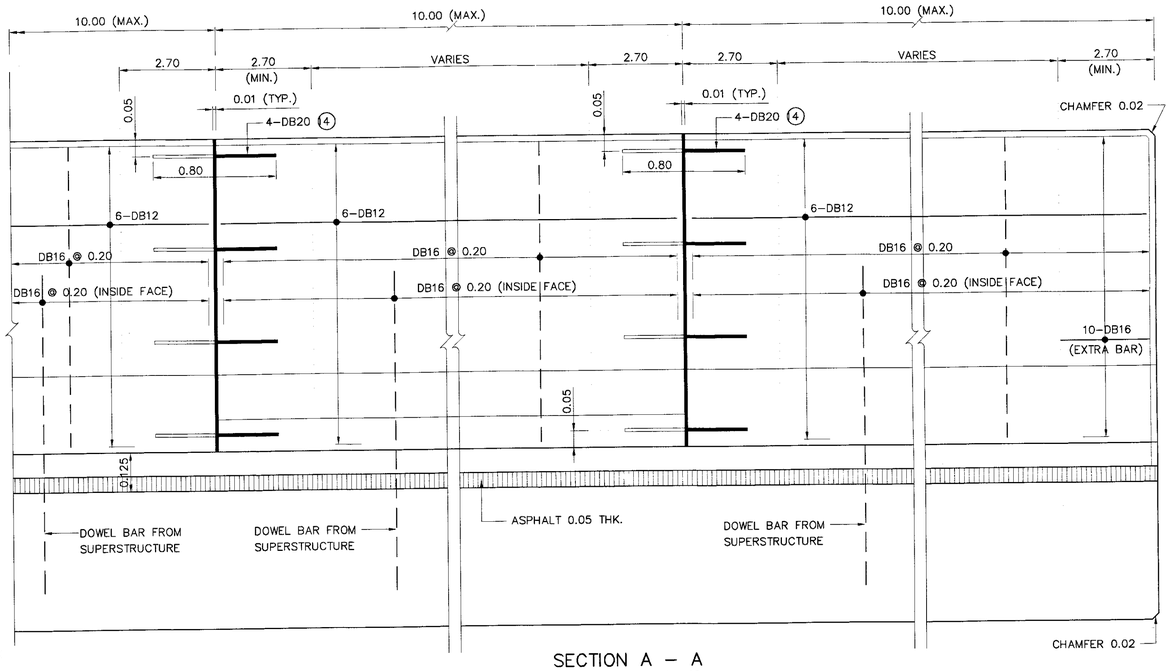

SECTION A – A
SCALE 1 : 10

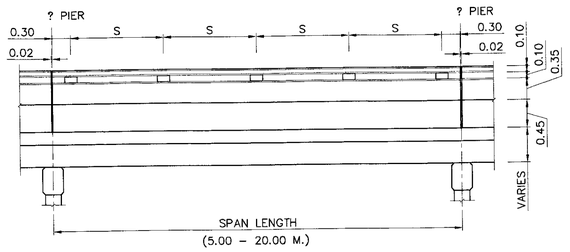

TYPICAL RAILING POST SPACING
SCALE 1 : 50

TABLE OF RAILING POST SPACING								
SPAN (M.)	5.00	6.00	7.00	8.00	9.00	10.00	15.00	20.00
SPACING, S (M.)	1.46	1.80	1.60	1.85	1.68	1.88	1.80	1.94

NOTES:

1. ALL DIMENSIONS SHOWN ARE IN METERS UNLESS OTHERWISE INDICATED.
2. SCOPE OF APPLICATION OF TRAFFIC RAILING IS BASED ON THE HEIGHT OF 1.15 M. (TEST LEVEL 5) FOR HL-93 HIGHWAY TRUCK (AASHTO LRFD, 2012). THE BARRIER IS SUITABLE ONLY IN SPECIFIC LOCATIONS WHERE HIGH-SPEED, HIGH-ANGLE IMPACT WITH THE RAILING (SUCH AS SHORT RADIUS CURVES) OR SITE-SPECIFIC SAFETY CONCERNS.
3. A MINIMUM 28-DAYS 150x150x150 MM. CUBE STRENGTH SHALL BE 35 MPa. (357 KG/CM ^{2})
4. REBARS DB12 OR LARGER SHALL BE TIS 24 GRADE SD40 DEFORMED BARS, OTHERS SHALL BE TIS 20 GRADE SR 24 PLAIN BARS UNLESS OTHERWISE INDICATED.
5. ANY SPECIAL RAILINGS, IF DIFFERENT FROM THE ABOVE-MENTIONED MAY BE USED UNDER THE APPROVAL OF THE ENGINEER.
6. CLEAR CONCRETE COVER SHALL BE 30 MM. UNLESS OTHERWISE INDICATED
7. ALL EXPOSED CORNERS SHALL HAVE 20 MM. CHAMFERS UNLESS OTHERWISE INDICATED.
8. THE LONGITUDINAL REINFORCING BARS FOR THE CONCRETE BARRIER SHALL BE CONTINUOUS BETWEEN BRIDGE EXPANSION JOINTS. WHERE SPLICES ARE REQUIRED, THE LENGTH OF THE LAP SHALL BE SUFFICIENT TO DEVELOP EACH BAR.
9. IN SOME CASE, TRAFFIC RAILING MAY BE SUBSTITUTED BY GUARD RAILS FASTENED ON CONCRETE RAILING POSTS AS APPROVED BY THE ENGINEER.
10. DETAILS OF REBARS SHOWN ARE FOR TRAFFIC RAILING ONLY, REBARS DETAILS IN SIDEWALKS AND CURBS ARE SHOWN ON SLAB BRIDGE DRAWINGS OF BRIDGE DECK AND SIDEWALKS.
11. PAINTING AT THE END FACES OF RAILING AND SIDEWALK WHICH EXPOSED TO TRAFFIC (IF ANY) SHALL BE PROVIDED BY APPLYING ALTERNATE STRIPES OF BLACK AND WHITE COLOUR OF 0.10 M. WIDE EACH AND 45 DEGREE TO THE HORIZONTAL PLANE, WHITE PAINT SHALL BE LIGHT REFLECTED ONE.

(2.) THE GALVANIZED STEEL PIPE SHALL BE USED FOR DIFFERENT APPLICATION ON HIGH SPEED HIGHWAYS OR SITE-SPECIFIC SAFETY CONCERNS AS REQUIRED

(3.) ADD THE EXTRA BAR AT THE ENDS OF SPAN

(4.) SMOOTH DOWEL BARS SHALL BE COATED WITH ASPHALT OR OTHER APPROVED MATERIAL ON BARRIER SIDE OF BRIDGE TO PERMIT MOVEMENT.

15. THIS DRAWING IS USED IN CONJUNCTION WITH DWG. NO. BR-102

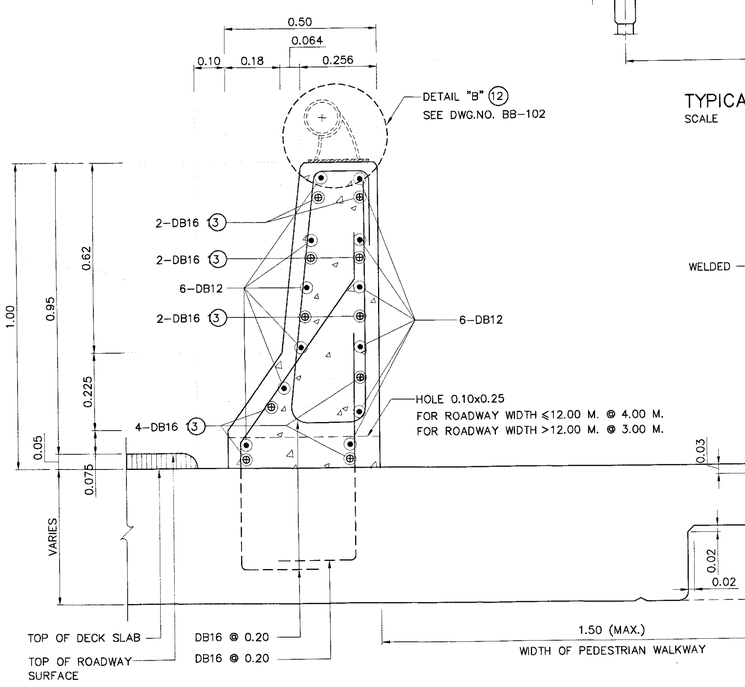

TRAFFIC BARRIER AND PEDESTRIAN RAILING
SCALE 1 : 10

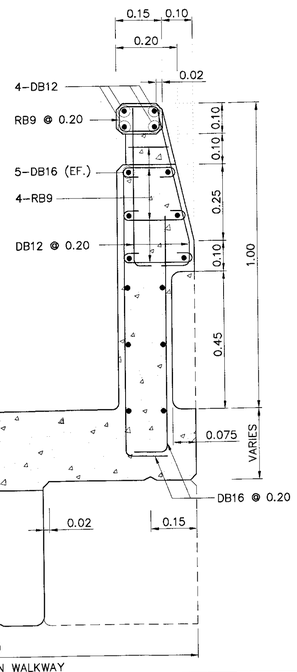

PEDESTRIAN BARRIER
SCALE 1 : 10

REV.	REVISION	SIGNATURE	DATE
REV.1	REVISION 1/2017		JUN 2017

KINGDOM OF THAILAND
MINISTRY OF TRANSPORT
DEPARTMENT OF HIGHWAYS

STANDARD DRAWING
TRAFFIC AND PEDESTRIAN BARRIERS
REINFORCEMENT DETAIL

DESIGNED : D.O.H. & CONSULTANTS	**CHECKED :** BUREAU OF LOCATION & DESIGN	**DATE :** OCT 2015
SUBMITTED : (DIRECTOR OF LOCATION & DESIGN BUREAU)		**SCALE :** AS SHOWN
		DWG NO. BR-101
APPROVED : (FOR DIRECTOR GENERAL)		**SHEET NO.** 289/RI

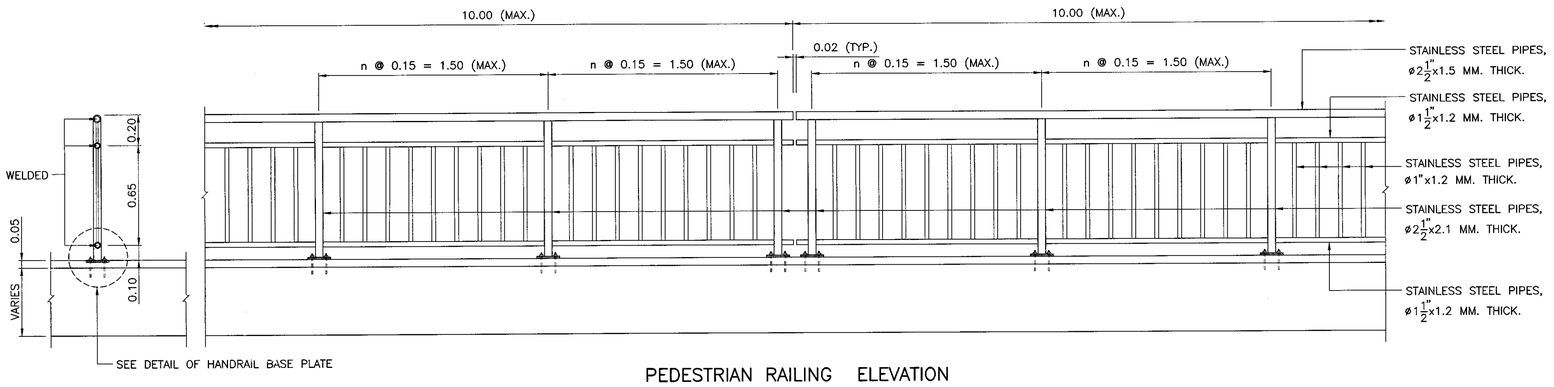

PEDESTRIAN RAILING ELEVATION
SCALE 1 : 20

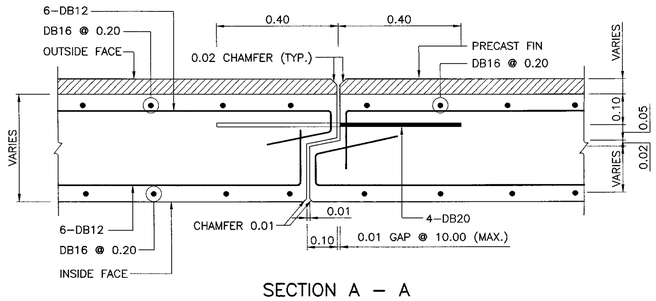

SECTION A – A
SCALE 1 : 10

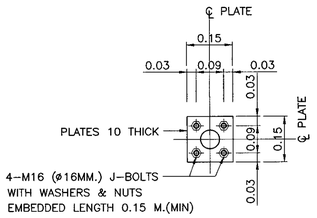

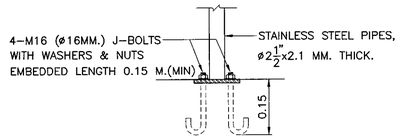

DETAIL OF HANDRAIL BASE PLATE
SCALE 1 : 10

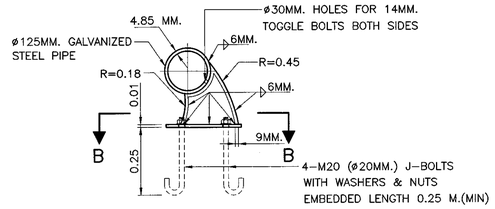

DETAIL "B"
SCALE 1 : 10

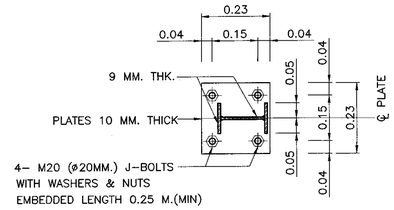

BARRIER TYPE 1

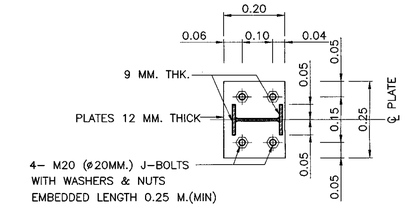

BARRIER TYPE 2

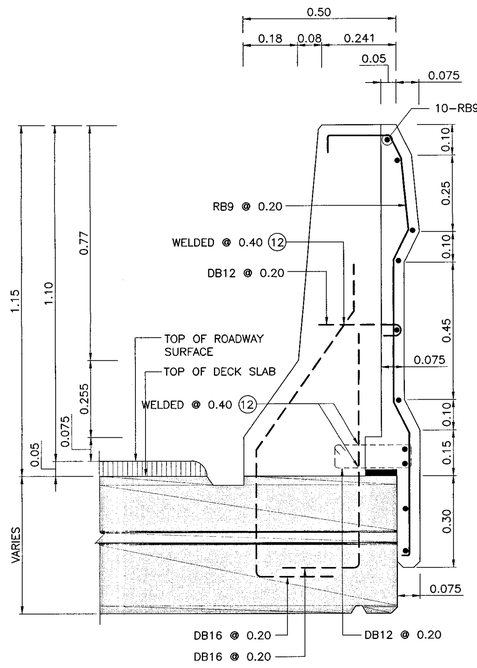

SECTION

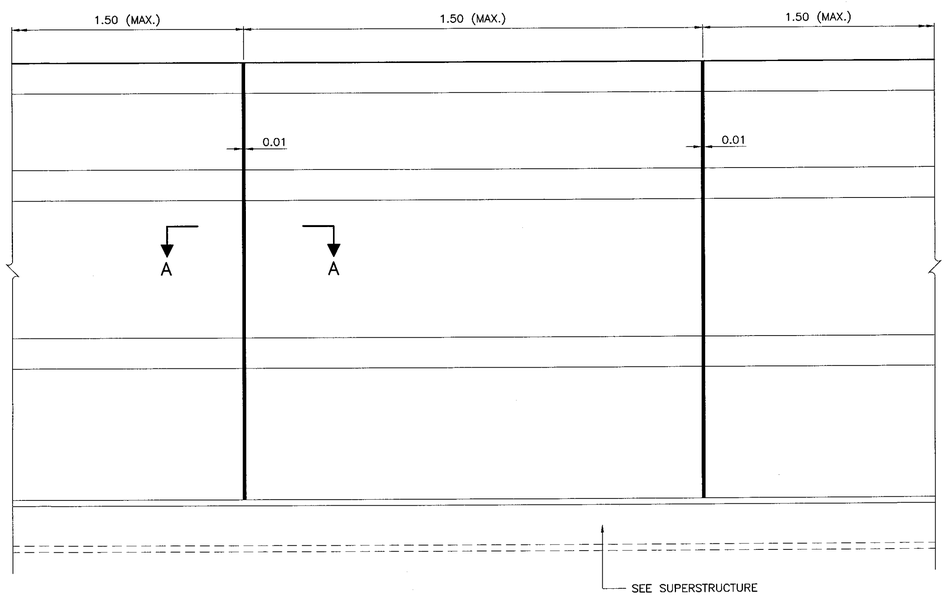

ELEVATION

BARRIER FIN DETAIL
SCALE 1 : 10

SECTION B – B
SCALE 1 : 10

NOTES:

1. ALL DIMENSIONS SHOWN ARE IN METERS UNLESS OTHERWISE INDICATED.
2. SCOPE OF APPLICATION OF TRAFFIC RAILING IS BASED ON THE HEIGHT OF 1.15 M. (TEST LEVEL 5) FOR HL–93 HIGHWAY TRUCK (AASHTO LRFD, 2012). THE BARRIER IS SUITABLE ONLY IN SPECIFIC LOCATIONS WHERE HIGH–SPEED, HIGH–ANGLE IMPACT WITH THE RAILING (SUCH AS SHORT RADIUS CURVES) OR SITE–SPECIFIC SAFETY CONCERNS.
3. A MINIMUM 28–DAYS 150x150x150 MM. CUBE STRENGTH SHALL BE 35 MPa. (357 KG/CM^2)
4. REBARS DB12 OR LARGER SHALL BE TIS 24 GRADE SD40 DEFORMED BARS, OTHERS SHALL BE TIS 20 GRADE SR 24 PLAIN BARS UNLESS OTHERWISE INDICATED.
5. ANY SPECIAL RAILINGS, IF DIFFERENT FROM THE ABOVE–MENTIONED MAY BE USED UNDER THE APPROVAL OF THE ENGINEER.
6. CLEAR CONCRETE COVER SHALL BE 30 MM. UNLESS OTHERWISE INDICATED
7. ALL EXPOSED CORNERS SHALL HAVE 25 MM. CHAMFERS UNLESS OTHERWISE INDICATED.
8. THE LONGITUDINAL REINFORCING BARS FOR THE CONCRETE BARRIER SHALL BE CONTINUOUS BETWEEN BRIDGE EXPANSION JOINTS. WHERE SPLICES ARE REQUIRED, THE LENGTH OF THE LAP SHALL BE SUFFICIENT TO DEVELOP EACH BAR.
9. IN SOME CASE, TRAFFIC RAILING MAY BE SUBSTITUTED BY GUARD RAILS FASTENED ON CONCRETE RAILING POSTS IF APPROVED BY THE ENGINEER.
10. DETAILS OF REBARS SHOWN ARE FOR TRAFFIC RAILING ONLY, DETAILS REBARS IN SIDEWALKS AND CURBS ARE SHOWN ON SLAB BRIDGE DRAWINGS OF BRIDGE DECK AND SIDEWALKS.
11. PAINTING AT THE END FACES OF RAILING AND SIDEWALK WHICH EXPOSED TO TRAFFIC (IF ANY) SHALL BE PROVIDED BY APPLYING ALTERNATE STRIPES OF BLACK AND WHITE COLOUR OF 0.10 M. WIDE EACH AND 45 DEGREE TO THE HORIZONTAL PLANE, WHITE PAINT SHALL BE LIGHT REFLECTED ONE.
12. FIELD WELDS SHALL BE CONNECTED BY ELECTRODE (E60), CONFORM TO TIS 49
13. THIS DRAWING IS USED IN CONJUNCTION WITH DWG. NO. BR–101

REF.	REVISION	SIGNATURE	DATE

KINGDOM OF THAILAND

MINISTRY OF TRANSPORT
DEPARTMENT OF HIGHWAYS

STANDARD DRAWING

TRAFFIC AND PEDESTRIAN BARRIERS
PRECAST FIN AND RAILING DETAILS

DESIGNED : D.O.H. & CONSULTANTS	**CHECKED :** BUREAU OF LOCATION & DESIGN	**DATE :** OCT 2015
SUBMITTED : (DIRECTOR OF LOCATION & DESIGN BUREAU)		**SCALE :** AS SHOWN
APPROVED : (FOR DIRECTOR GENERAL)		**DWG NO.** BR–102
		SHEET NO. 290

D:\std dwg 2015\BR-102(REV00)

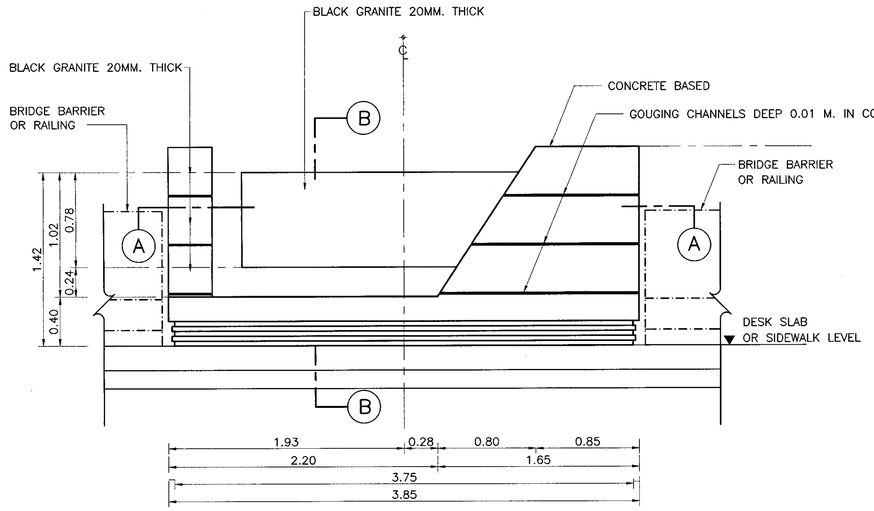

BACK ELEVATION
SCALE 1:25

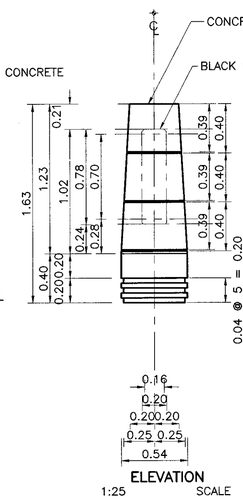

ELEVATION
1:25 SCALE

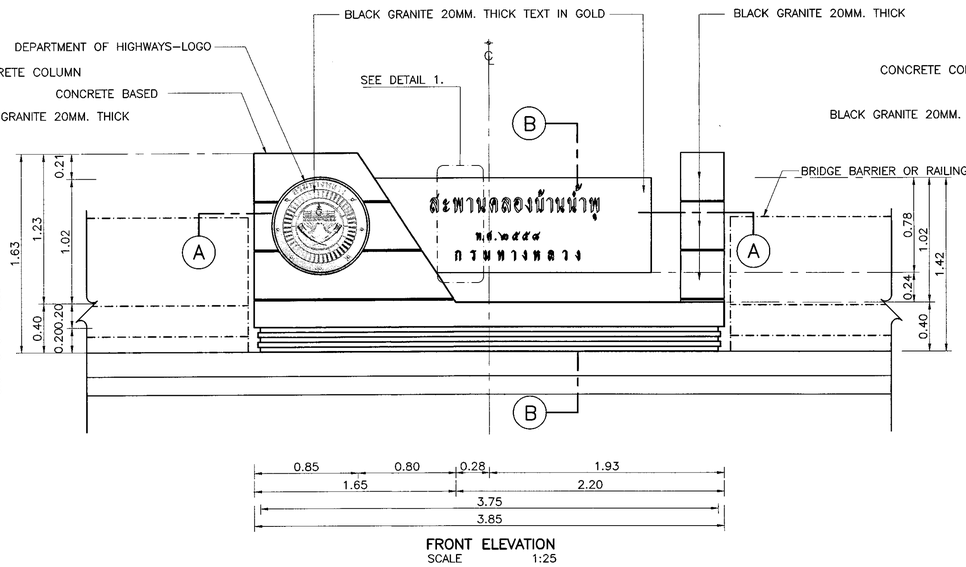

FRONT ELEVATION
SCALE 1:25

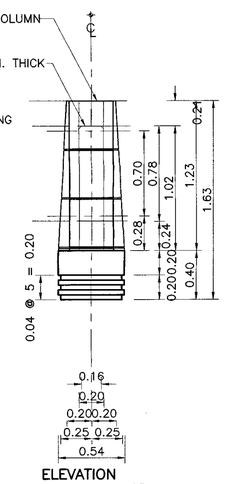

ELEVATION
SCALE 1:25

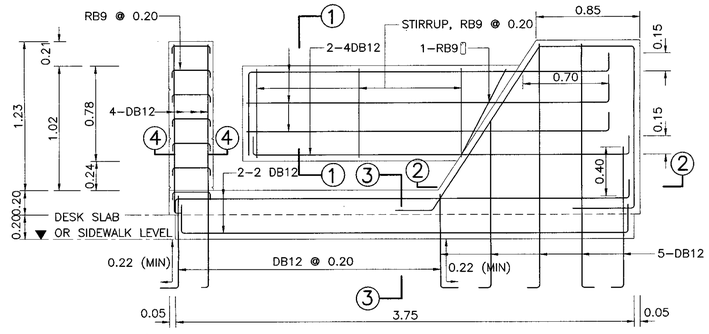

STRUCTURAL FRONT VIEW
SCALE 1:25

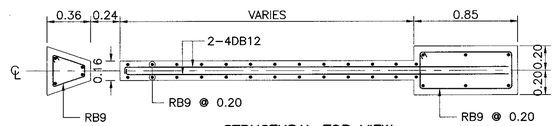

STRUCTURAL TOP VIEW
SCALE 1:25

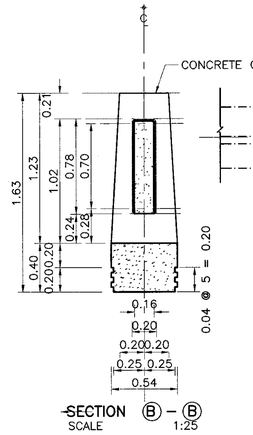

SECTION Ⓑ – Ⓑ
SCALE 1:25

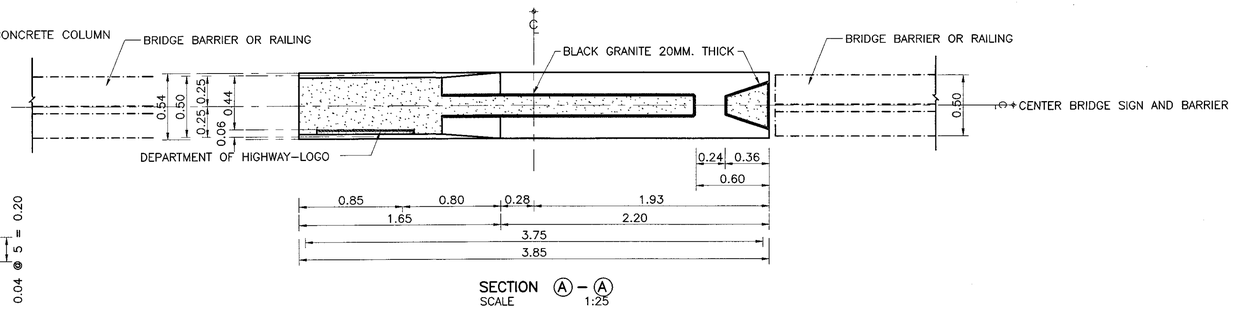

SECTION Ⓐ – Ⓐ
SCALE 1:25

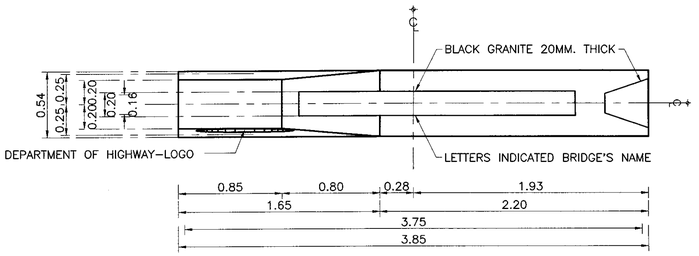

PLAN
SCALE 1:25

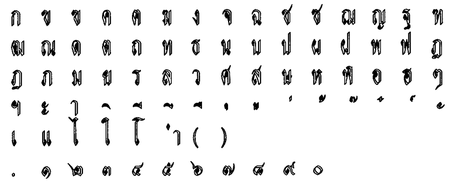

TEXTS STYLE LABELED ON BOARD
NOT TO SCALE

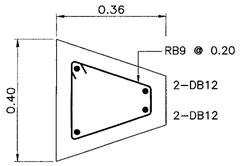

SECTION ④ – ④
SCALE 1:10

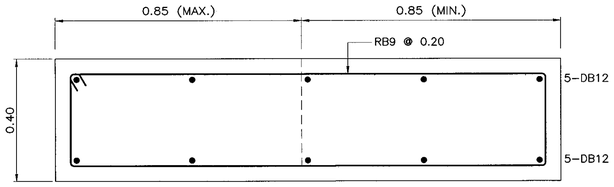

SECTION ② – ②
SCALE 1:10

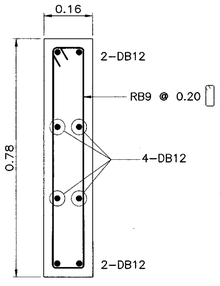

SECTION ① – ①
SCALE 1:10

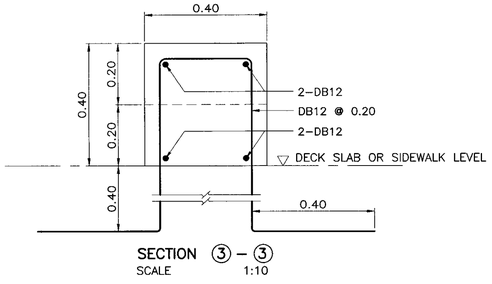

SECTION ③ – ③
SCALE 1:10

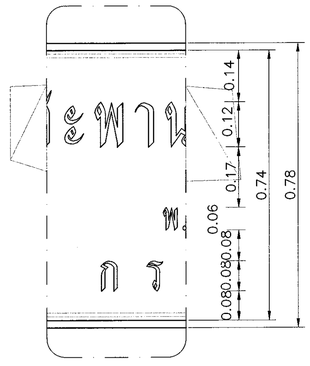

DETAIL 1
SCALE 1:10

NOTE :

1. ALL DIMENSIONS ARE IN METERS UNLESS OTHERWISE INDICATED
2. LETTER AND PATTERN ON BOARD USING GOUGE METHOD 5 MM DEEP AND PAINTED IN GOLD COLOR
3. DEPARTMENT OF HIGHWAYS LOGO SHALL BE GOUGE ON GRANITE 5 MM DEEP AND PAINTED IN GOLD COLOR
4. TO BE SPECIFIED BUDDHIST ERA IN FINISHED YEAR
5. POSITION OF SPECIAL SIGN MUST BE INSTALLED AT THE MIDDLE OF MAIN SPAN BRIDGE THAT ACROSS OVER THE RIVER
6. INSTALLATION MUST APPLY TO BOTH SIDES OF ROAD AND BURIED IN CONCRETE MATERIAL. BOARD SURFACE MUST BE AS FLAT AS RAILING SURFACE.
7. SPECIAL BRIDGE NAME SIGN FACE SHALL BE TURNED TO TRAVELING WAY
8. IN CASE OF INSTALLATION BRIDGE NAME ON BOTH SIDE OF SPECIAL BRIDGE NAME SIGN, THE D.O.H. LOGO AND LETTER SHALL BE APPLIED ON ANOTHER SIDE
9. THE LETTER SHALL BE REFER TO TEXTS STYLE LABELED ON BOARD OR APPROVED BY ENGINEER

KINGDOM OF THAILAND

MINISTRY OF TRANSPORT
DEPARTMENT OF HIGHWAYS

STANDARD DRAWING
BRIDGE SIGN
SPECIAL BRIDGE NAME SIGN

DESIGNED : D.O.H. & CONSULTANTS	CHECKED : BUREAU OF LOCATION & DESIGN	DATE : OCT 2015
SUBMITTED : (DIRECTOR OF LOCATION & DESIGN BUREAU)		SCALE : AS SHOWN
APPROVED : (FOR DIRECTOR GENERAL)		DWG NO. SN–201
		SHEET NO. 291

REF.	REVISION	SIGNATURE	DATE

D:\std dwg 2015\SN-201(REV00)

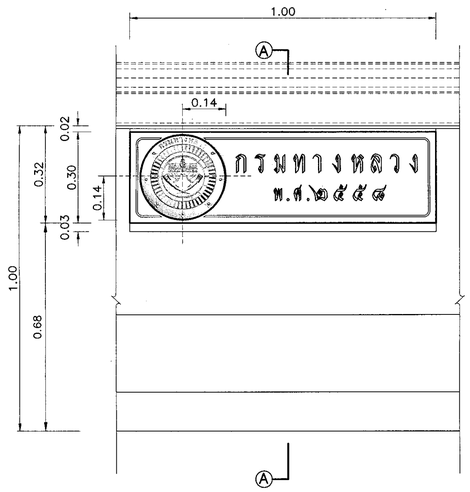

FRONT ELEVATION BARRIER WITH RAILLING TYPE 1
SCALE 1:10

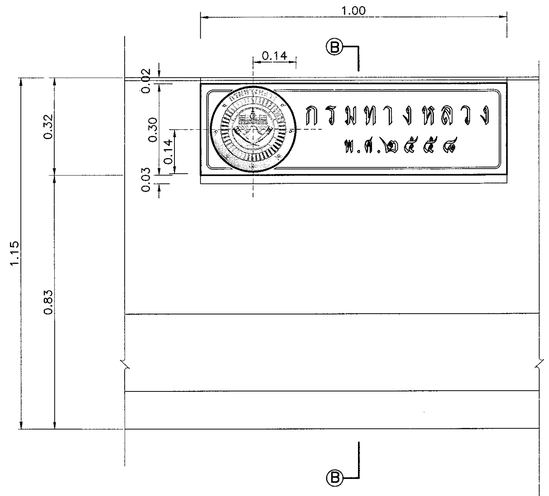

FRONT ELEVATION TRAFFIC BARRIER TYPE 2
SCALE 1:10

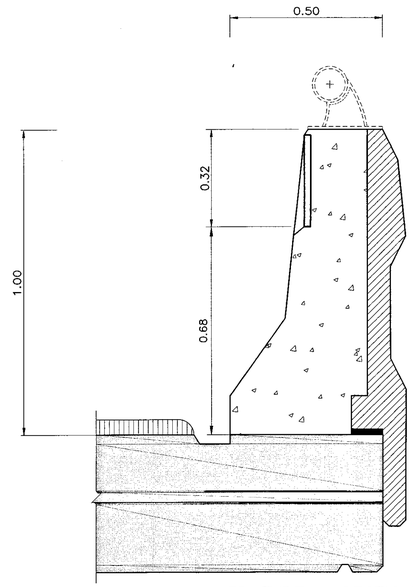

TRAFFIC BARRIER TYPE 1 SECTION Ⓐ
SCALE 1 : 10

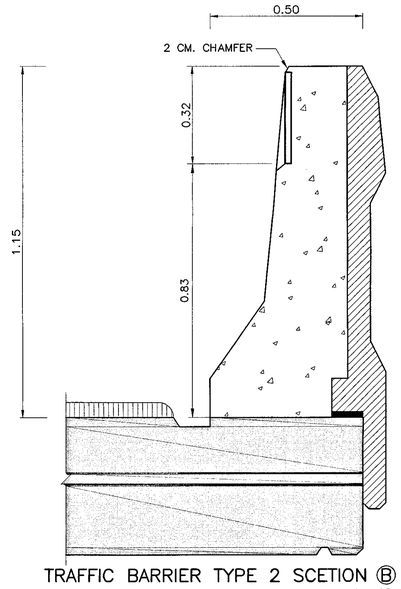

TRAFFIC BARRIER TYPE 2 SCETION Ⓑ
SCALE 1 : 10

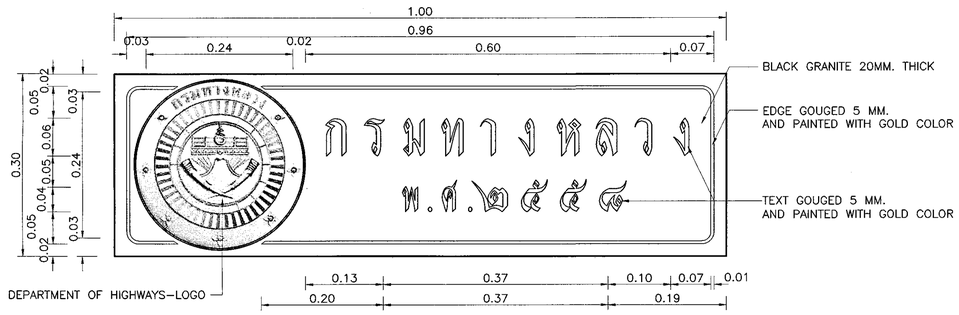

BRIDGE SIGNED
SCALE 1:5

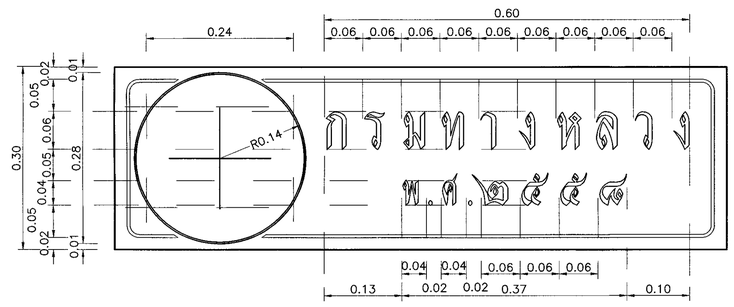

BRIDGE SIGNED DETAILS
SCALE 1:5

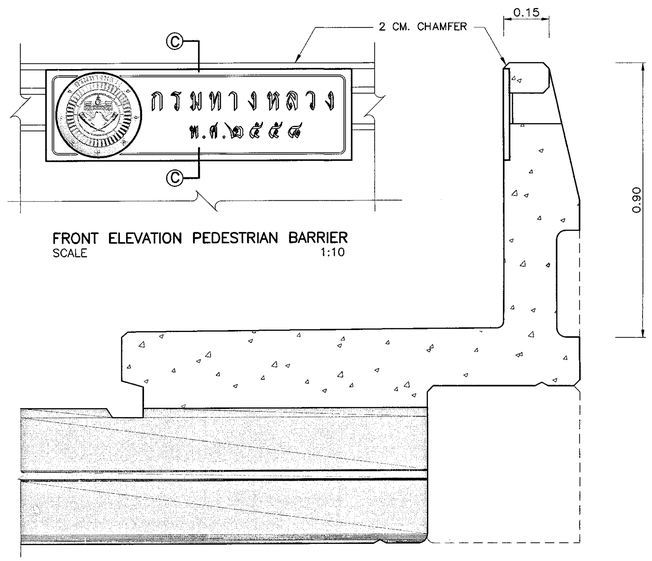

FRONT ELEVATION PEDESTRIAN BARRIER
SCALE 1:10

PEDESTRIAN BARRIER SECTION Ⓒ
SCALE 1 : 10

NOTE :

1. ALL DIMENSIONS ARE IN MILLIMETERS UNLESS OTHERWISE INDICATED
2. LETTER AND PATTERN ON BOARD USING GOUGE METHOD 5 MM DEEP AND PAINTED IN GOLD COLOR
3. DEPARTMENT OF HIGHWAYS LOGO SHALL BE GOUGE ON GRANITE 5 MM DEEP AND PAINTED IN GOLD COLOR
4. TO BE SPECIFIED BUDDHIST ERA IN FINISHED YEAR
5. POSITION OF STANDARD SIGN MUST BE INSTALLED AT THE MIDDLE OF BRIDGE THAT ACROSS OVER THE CANAL
6. INSTALLATION MUST APPLY TO BOTH SIDES OF ROAD AND BURIED IN CONCRETE MATERIAL. BOARD SURFACE MUST BE AS FLAT AS RAILING SURFACE
7. GENERAL BRIDGE NAME SIGN FACE SHALL BE TURNED TO TRAVELING WAY
8. LETTERS AND NUMBERS DETAILS REFER TO DWG. NO. SN–201

KINGDOM OF THAILAND

MINISTRY OF TRANSPORT
DEPARTMENT OF HIGHWAYS

STANDARD DRAWING
BRIDGE SIGN
GENERAL BRIDGE NAME SIGN

DESIGNED : D.O.H. & CONSULTANTS	CHECKED : BUREAU OF LOCATION & DESIGN	DATE : OCT 2015
SUBMITTED : (DIRECTOR OF LOCATION & DESIGN BUREAU)		SCALE : AS SHOWN
APPROVED : (FOR DIRECTOR GENERAL)		DWG NO. SN–202
		SHEET NO. 292

REF.	REVISION	SIGNATURE	DATE

D:\std dwg 2015\SN-202(REV00)

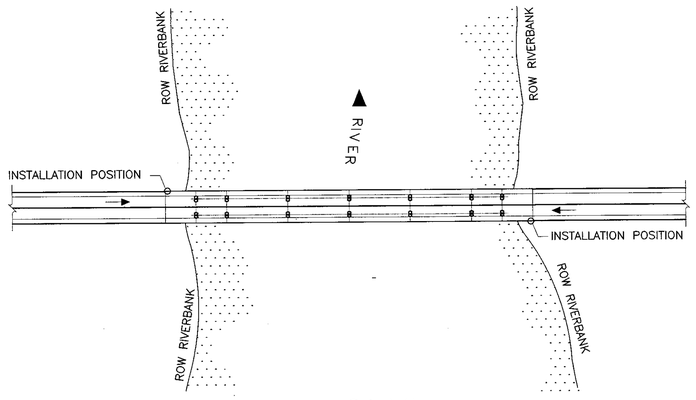

PLAN
SCALE 1:100

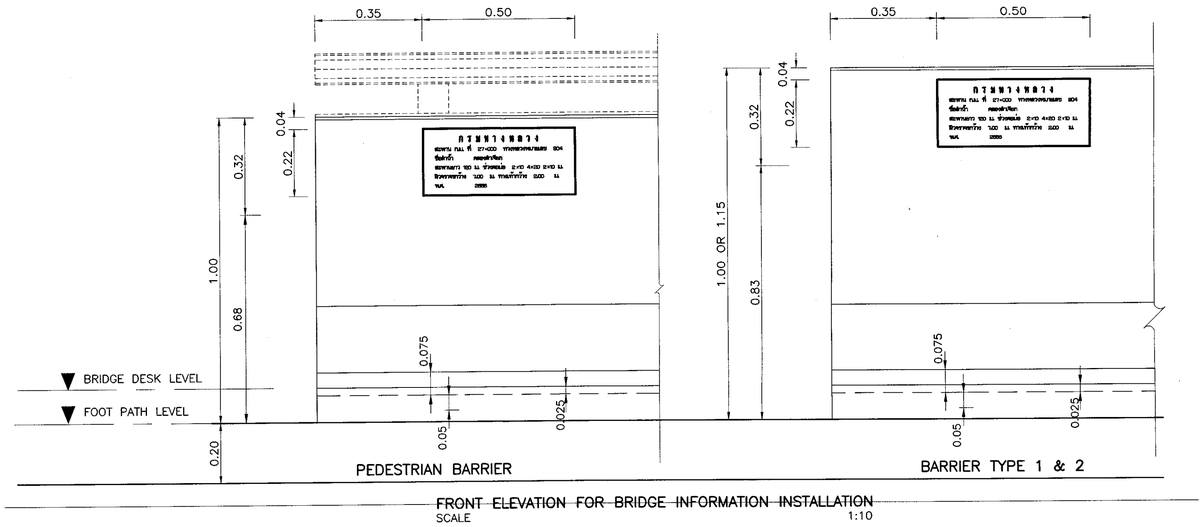

FRONT ELEVATION FOR BRIDGE INFORMATION INSTALLATION
SCALE 1:10

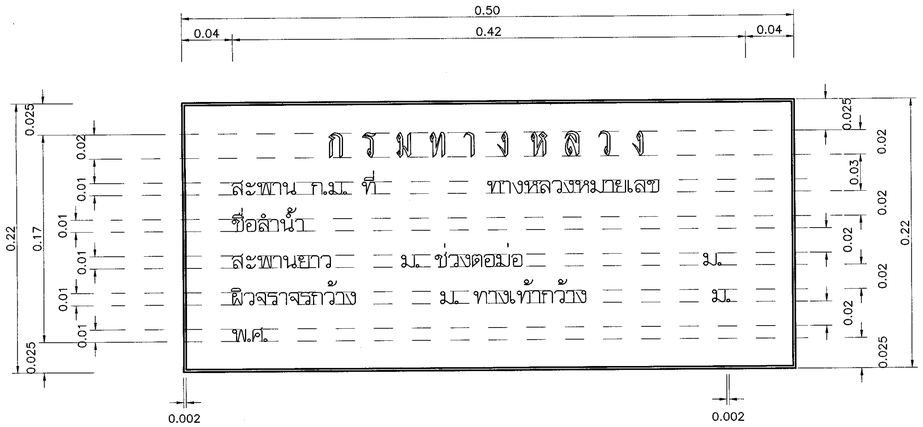

BRIDGE INFO BOARD AND DETAILS
SCALE 1:2.5

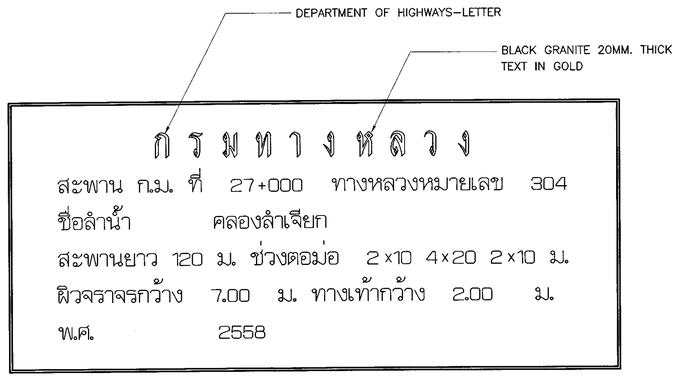

EXAMPLE BRIDGE INFORMATION BOARD
SCALE 1:2.5

NOTE :

1. ALL DIMENSIONS ARE IN MILLIMETERS UNLESS OTHERWISE INDICATED
2. LETTER AND PATTERN ON BOARD USING GOUGE METHOD 5 MM DEEP AND PAINTED IN GOLD COLOR
3. DEPARTMENT OF HIGHWAY LETTER SHALL BE GOUGE ON GRANITE 5 MM DEEP AND PAINTED IN GOLD COLOR
4. TO BE SPECIFIED BUDDHIST ERA IN FINISHED YEAR
5. INSTALLATION MUST APPLY TO BOTH SIDES OF ROAD AND BURIED IN CONCRETE MATERIAL. BOARD SURFACE MUST BE AS FLAT AS RAILING SURFACE
6. LETTERS AND NUMBERS DETAILS REFER TO DWG. NO. SN–201
7. BRIDGE INFORMATION SIGN FACE SHALL BE TURNED TO TRAVELING WAY

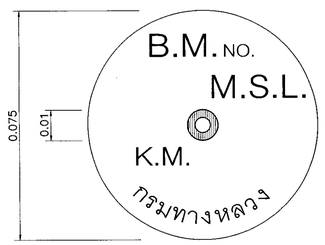

BENCH MARK TABLET
NOT TO SCALE

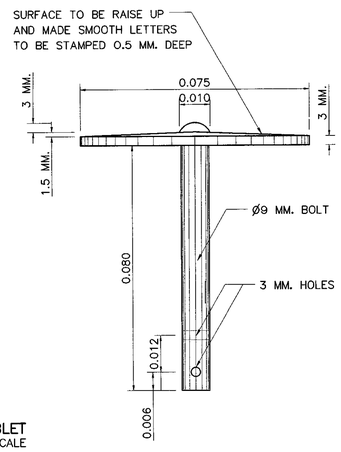

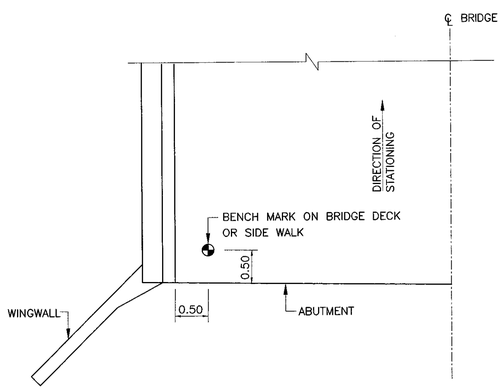

BENCH MARK LOCATION DETAIL ON BRIDGE
NOT TO SCALE

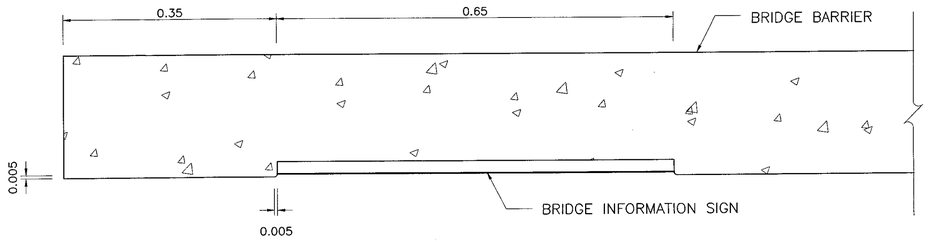

SECTION FOR INSTALLATION DETAILS
SCALE 1:5

KINGDOM OF THAILAND

MINISTRY OF TRANSPORT
DEPARTMENT OF HIGHWAYS

STANDARD DRAWING
BRIDGE SIGN
BRIDGE INFORMATION SIGN & BENCHMARK

DESIGNED : D.O.H. & CONSULTANTS	CHECKED : BUREAU OF LOCATION & DESIGN	DATE : OCT 2015	
SUBMITTED : (DIRECTOR OF LOCATION & DESIGN BUREAU)		SCALE : AS SHOWN	
APPROVED : (FOR DIRECTOR GENERAL)		DWG NO. SN–203	
		SHEET NO. 293	

REF.	REVISION	SIGNATURE	DATE

D:\std dwg 2015\SN-203(REV00)

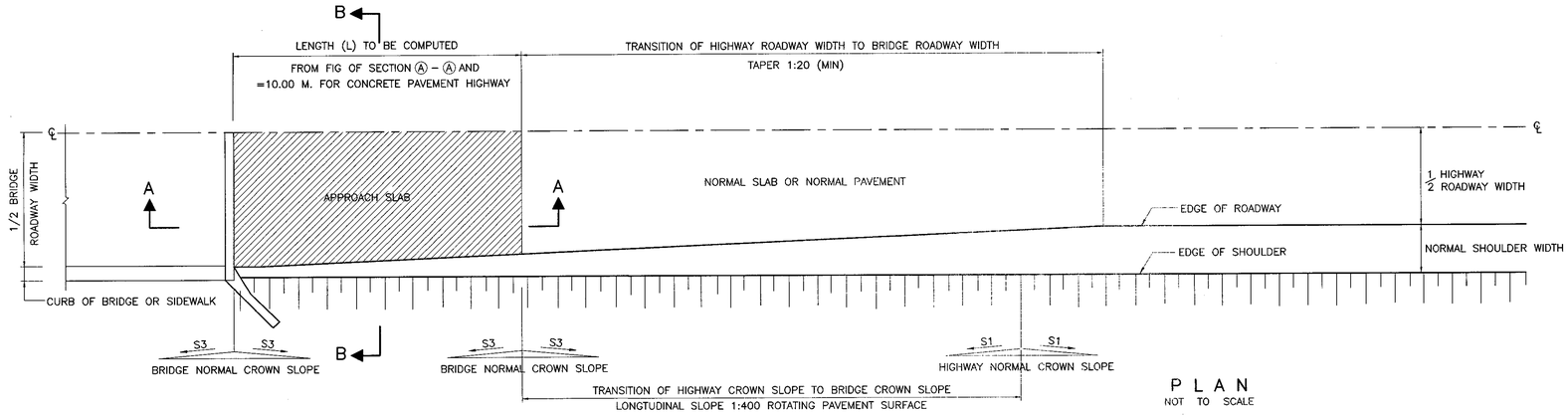

PLAN
NOT TO SCALE

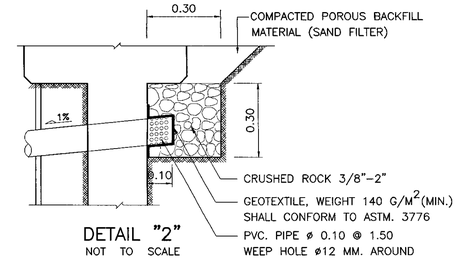

DETAIL "2"
NOT TO SCALE

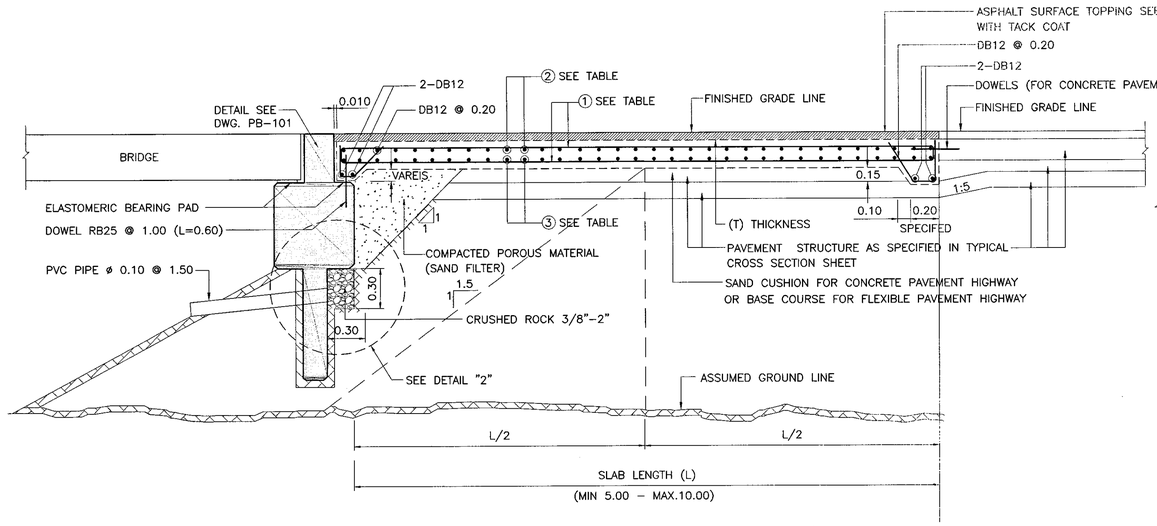

SECTION A – A
SCALE 1 : 25

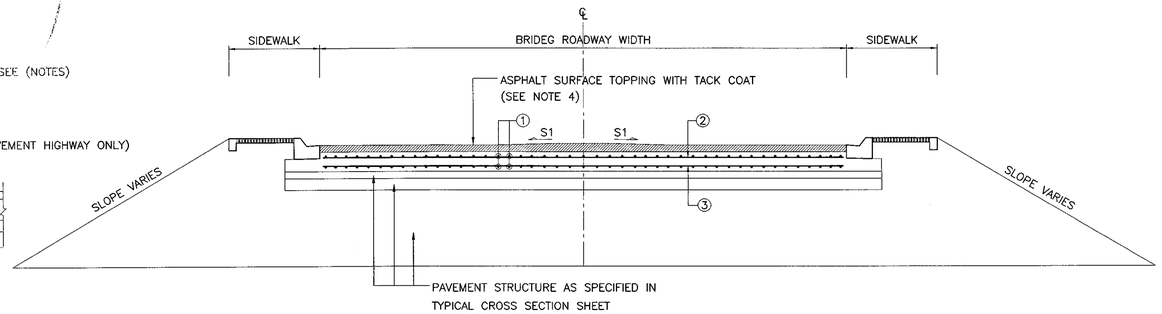

SECTION A – A FOR ROADWAY WITH SIDEWALK
SCALE 1 : 50

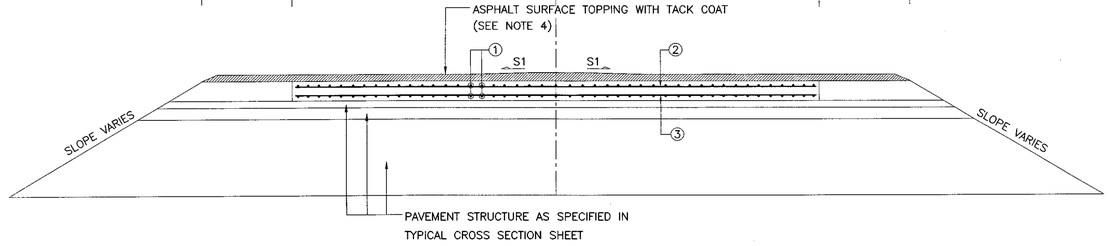

SECTION B – B FOR ROADWAY WITH SHOULDER
SCALE 1 : 50

NOTES

1. ALL DIMENSIONS SHOWN ARE IN METERS UNLESS OTHERWISE INDICATED.
2. THE CONSTITUANT OF THE CONCRETE MIX. PER. CUBIC MUST BE AS FOLLOWS–PORTLAND CEMENT 350 KG. SAND 0.43 CU M. CRUSHED ROCK OR GRAVEL 0.86 CU M., SLUMP OF THE CONCRETE SLUMP NOT BE HIGHER THAN 100 MM. WITH AN ULTIMATE COMPRESSIVE STRENGTH OF STANDARD CUBE 150x150x150 MM. NOT LOWER THAN 35 N/MM^2 AT THE AGE OF 28 DAYS.
3. REINFORCING STEEL MUST CONFORM TO THE STANDARD TIS.20 FOR THE ROUND BAR AND TIS.24 CLASS SD 40 FOR THE DEFORMED BAR.
4. THE ASPHALT SURFACE FOR THE TOPPING ON THE APPROACH SLAB SHALL BE AS FOLLOWS
   - 4.1 FOR CONCRETE PAVEMENT HIGHWAY ON SOFT FOUNDATION WITH ASPHALTIC CONCRETE TREATED SHOULDER, 50 MM. THICKNESS OF HOT MIXED ASPHALTIC CONCRETE SHALL BE USED AS THE TOPPING
   - 4.2 FOR CONCRETE PAVEMENT HIGHWAY ON SOFT FOUNDATION WITH BITUMINOUS SURFACE TREATMENT TREATED SHOULDER OR NONTREATED SHOULDER, EITHER 50 MM. THICKNESS OF COLD MIX ASPHALTIC CONCRETE OR 50 MM. THICKNESS OF HOT MIXED ASPHALTIC CONCRETE SHALL BE USED.
   - 4.3 FOR CONCRETE PAVEMENT HIGHWAY ON NORMAL SOIL FOUNDATION NO ASPHALT SURFACE TOPPING SHALL BE REQUIRED AND THE APPROACH SLAB SHALL BE RAISED TO THE FINISHED GRADE LINE
   - 4.4 FOR FLEXIBLE PAVEMENT HIGHWAY WITH ASPHALTIC CONCRETE SURFACE, THE MIN. THICKNESS 50 MM. IS THE SAME AS THE HIGHWAY ASPHALTIC CONCRETE SURFACE TOPPING.
   - 4.5 FOR FLEXIBLE PAVEMENT HIGHWAY WITH BITUMINOUS SURFACE TREATMENT SURFACE, EITHER 50 MM. OF COLD MIXED ASPHALTIC CONCRETE OR 50 MM. OF HOT MIXED ASPHALTIC CONCRETE SHALL BE USED.
5. THE COLD MIXED AND THE HOT MIXED ASPHALTIC CONCRETE FOR THE TOPPING AS STATED IN THESE NOTES WILL BE CONFORMED TO THE SPECIAL PROVISIONS FOR ASPHALT TOPPING ON THE APPROACH SLAB STATED BY THE MATERIAL & RESEARCH DIVISION DEPARTMENT OF HIGHWAY.
6. THE COST OF THE APPROACH SLAB SHALL INCLUDE THE COST FOR THE ASPHALT TOPPING AND THE TACK COAT AS STATED IN THIS DRAWING (IF ANY)

REMARK

1. FOR SKEW BRIDGE, THE SLAB LENGTH (L) WILL BE THE SHORT SIDE OF THE APPROACH SLAB BUT THE THICKNESS AND THE REINFORCEMENT SHALL BE EQUIVALENT TO THOSE OF THE SLAB WITH THE SLAB LENGTH (L) EQUAL TO THE LONG SIDE OF THE APPROACH SLAB.
2. S1–ROAD NORMAL CROWN SLOPE
   S3–BRIDGE NORMAL CROWN SLOPE

TABLE SHOW THE DETAILS OF THE APPROACH SLAB

SLAB LENGTH (L+L1) MM.	THICKNESS (T) MM.	REINFORCEMENT		
		①	②	③
5.00	0.20	DB12 @ 0.25	DB12 @ 0.25	DB12 @ 0.25
6.00	0.22	DB16 @ 0.20	DB12 @ 0.25	DB16 @ 0.25
7.00	0.24	DB20 @ 0.20	DB12 @ 0.25	DB16 @ 0.25
8.00	0.26	DB20 @ 0.20	DB12 @ 0.25	DB16 @ 0.25
9.00	0.28	DB25 @ 0.25	DB12 @ 0.20	DB16 @ 0.25
10.00	0.30	DB25 @ 0.25	DB12 @ 0.15	DB16 @ 0.25

REF.	REVISION	SIGNATURE	DATE

KINGDOM OF THAILAND

MINISTRY OF TRANSPORT
DEPARTMENT OF HIGHWAYS

STANDARD DRAWING

BRIDGE APPROACH SLAB
0°–25° SKEW REINFORCEMENT AND POROUS BACKFILL DETAILS

DESIGNED : D.O.H. & CONSULTANTS	CHECKED : BUREAU OF LOCATION & DESIGN	DATE : OCT 2015
SUBMITTED : (DIRECTOR OF LOCATION & DESIGN BUREAU)		SCALE : AS SHOWN
APPROVED : (FOR DIRECTOR GENERAL)		DWG NO. AP–101
		SHEET NO. 294

D:\std dwg 2015\AP-101(REV00)

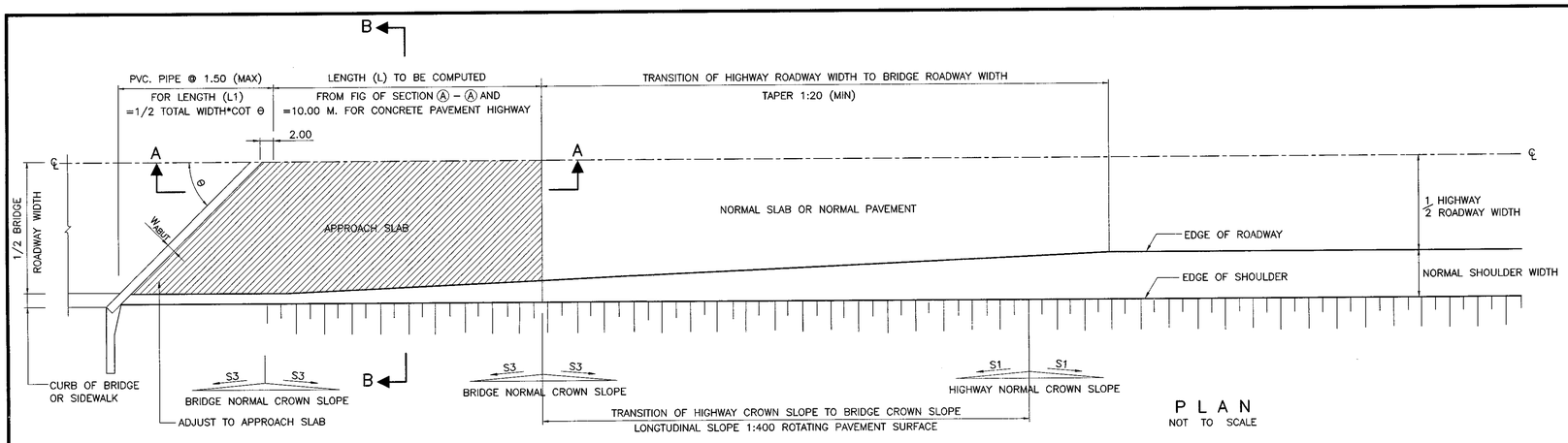

P L A N
NOT TO SCALE

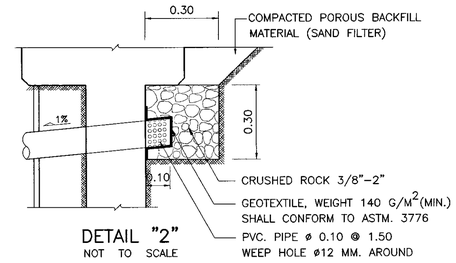

DETAIL "2"
NOT TO SCALE

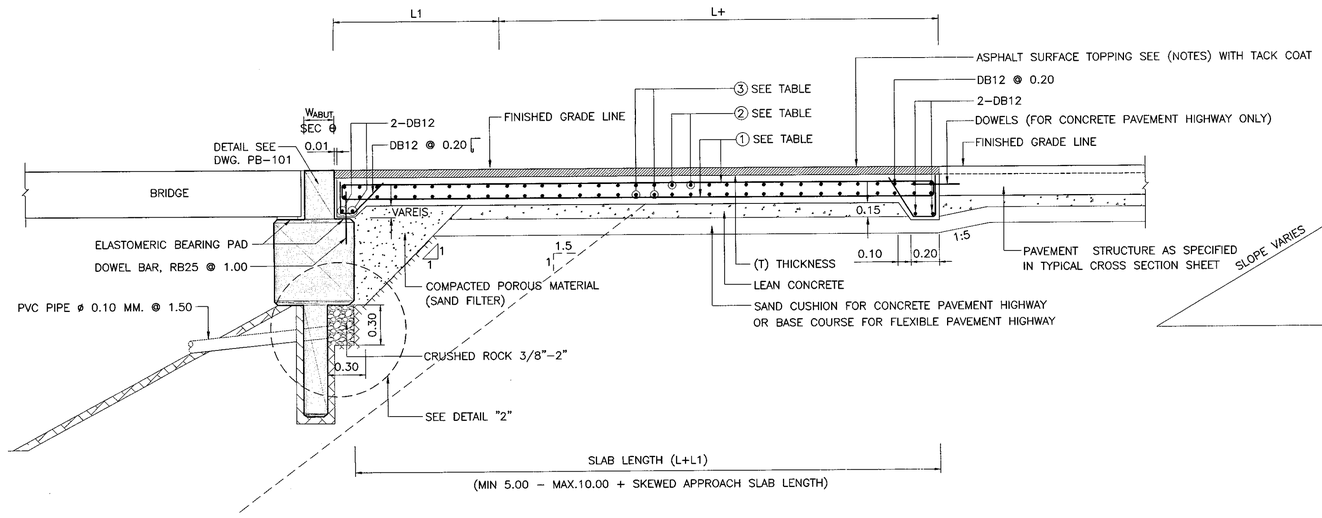

SECTION A – A
NOT TO SCALE

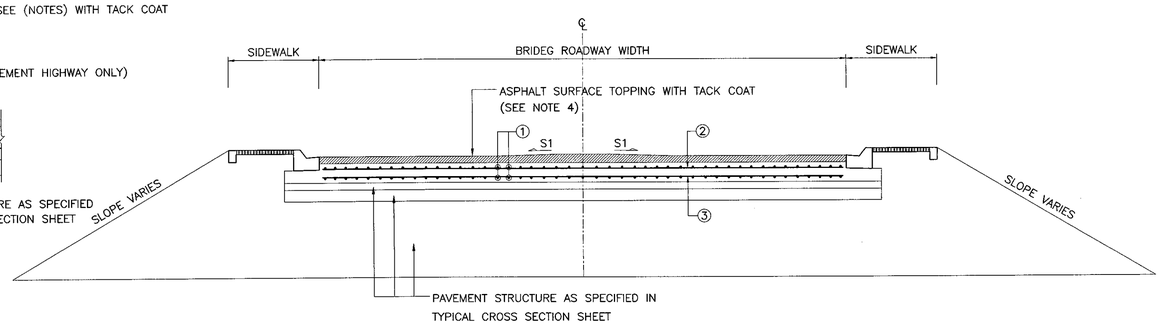

SECTION A – A FOR ROADWAY WITH SIDEWALK
SCALE 1 : 50

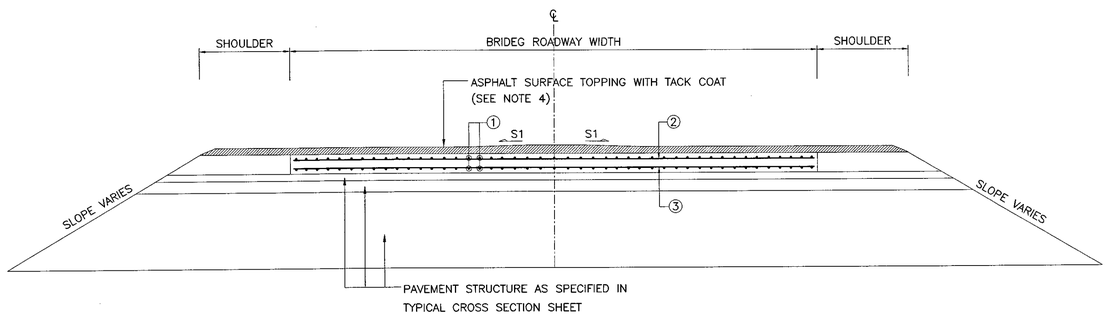

SECTION B – B FOR ROADWAY WITH SHOULDER
SCALE 1 : 50

NOTES

1. ALL DIMENSIONS SHOWN ARE IN METERS UNLESS OTHERWISE INDICATED.
2. THE CONSTITUANT OF THE CONCRETE MIX. PER. CUBIC MUST BE AS FOLLOWS–PORTLAND CEMENT 350 KG. SAND 0.43 CU M. CRUSHED ROCK OR GRAVEL 0.86 CU M., SLUMP OF THE CONCRETE SLUMP NOT BE HIGHER THAN 100 MM. WITH AN ULTIMATE COMPRESSIVE STRENGTH OF STANDARD CUBE 150x150x150 MM. NOT LOWER THAN 35 $N/MM.^2$ AT THE AGE OF 28 DAYS.
3. REINFORCING STEEL MUST CONFORM TO THE STANDARD TIS.20 FOR THE ROUND BAR AND TIS.24 CLASS SD 40 FOR THE DEFORMED BAR.
4. THE ASPHALT SURFACE FOR THE TOPPING ON THE APPROACH SLAB SHALL BE AS FOLLOWS
   - 4.1 FOR CONCRETE PAVEMENT HIGHWAY ON SOFT FOUNDATION WITH ASPHALTIC CONCRETE TREATED SHOULDER, THE 50 MM. HOT MIXED ASPHALTIC CONCRETE SHALL BE USED AS THE TOPPING
   - 4.2 FOR CONCRETE PAVEMENT HIGHWAY ON SOFT FOUNDATION WITH BITUMINOUS SURFACE TREATMENT TREATED SHOULDER OR NONTREATED SHOULDER, EITHER 50 MM. COLD MIX ASPHALTIC CONCRETE OR 50 MM. OF HOT MIXED ASPHALTIC CONCRETE SHALL BE USED.
   - 4.3 FOR CONCRETE PAVEMENT HIGHWAY ON NORMAL SOIL FOUNDATION NO ASPHALT SURFACE TOPPING SHALL BE REQUIRED AND THE APPROACH SLAB SHALL BE RAISED TO THE FINISHED GRADE LINE
   - 4.4 FOR FLEXIBLE PAVEMENT HIGHWAY WITH ASPHALTIC CONCRETE SURFACE, THE MIN. THICKNESS 50 MM. IS THE SAME AS THE HIGHWAY ASPHALTIC CONCRETE SURFACE TOPPING.
   - 4.5 FOR FLEXIBLE PAVEMENT HIGHWAY WITH BITUMINOUS SURFACE TREATMENT SURFACE, EITHER 50 MM. OF COLD MIXED ASPHALTIC CONCRETE OR 50 MM. OF HOT MIXED ASPHALTIC CONCRETE SHALL BE USED.
5. THE COLD MIXED AND THE HOT MIXED ASPHALTIC CONCRETE FOR THE TOPPING AS STATED IN THESE NOTES WILL BE CONFORMED TO THE SPECIAL PROVISIONS FOR ASPHALT TOPPING ON THE APPROACH SLAB STATED BY THE MATERIAL & RESEARCH DIVISION DEPARTMENT OF HIGHWAY.
6. THE COST OF THE APPROACH SLAB SHALL INCLUDE THE COST FOR THE ASPHALT TOPPING AND THE TACK COAT AS STATED IN THIS DRAWING (IF ANY)

REMARK

1. FOR SKEW BRIDGE, THE SLAB LENGTH (L) WILL BE THE SHORT SIDE OF THE APPROACH SLAB BUT THE THICKNESS AND THE REINFORCEMENT SHALL BE EQUIVALENT TO THOSE OF THE SLAB WITH THE SLAB LENGTH (L) EQUAL TO THE LONG SIDE OF THE APPROACH SLAB.
2. S1–ROAD NORMAL CROWN SLOPE
   S3–BRIDGE NORMAL CROWN SLOPE

TABLE SHOW THE DETAILS OF THE APPROACH SLAB

SLAB LENGTH (L+L1) MM.	THICKNESS (T) MM.	REINFORCEMENT ①	②	③
5.00 + L1	0.20	DB12 @ 0.25	DB12 @ 0.25	DB12 @ 0.25
6.00 + L1	0.22	DB16 @ 0.20	DB12 @ 0.25	DB16 @ 0.25
7.00 + L1	0.24	DB20 @ 0.20	DB12 @ 0.25	DB16 @ 0.25
8.00 + L1	0.26	DB20 @ 0.20	DB12 @ 0.25	DB16 @ 0.25
9.00 + L1	0.28	DB25 @ 0.25	DB12 @ 0.20	DB16 @ 0.25
10.00 + L1	0.30	DB25 @ 0.25	DB12 @ 0.15	DB16 @ 0.25

REF.	REVISION	SIGNATURE	DATE

KINGDOM OF THAILAND

MINISTRY OF TRANSPORT
DEPARTMENT OF HIGHWAYS

STANDARD DRAWING

BRIDGE APPROACH SLAB
26°–45° SKEW REINFORCEMENT AND POROUS BACKFILL DETAILS

DESIGNED : D.O.H. & CONSULTANTS	CHECKED : BUREAU OF LOCATION & DESIGN	DATE : OCT 2015
SUBMITTED : (DIRECTOR OF LOCATION & DESIGN BUREAU)		SCALE : AS SHOWN
APPROVED : (FOR DIRECTOR GENERAL)		DWG NO. AP–102
		SHEET NO. 295

D:\std dwg 2015\AP-102(REV00)

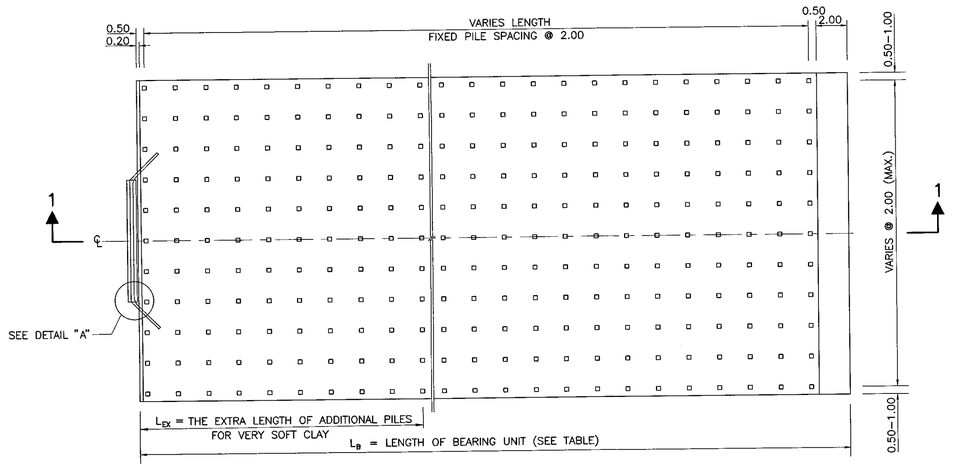

PLAN INDICATING THE LOCATION OF PILE (FOR 0° SKEW BRIDGE)
SCALE 1 : 100

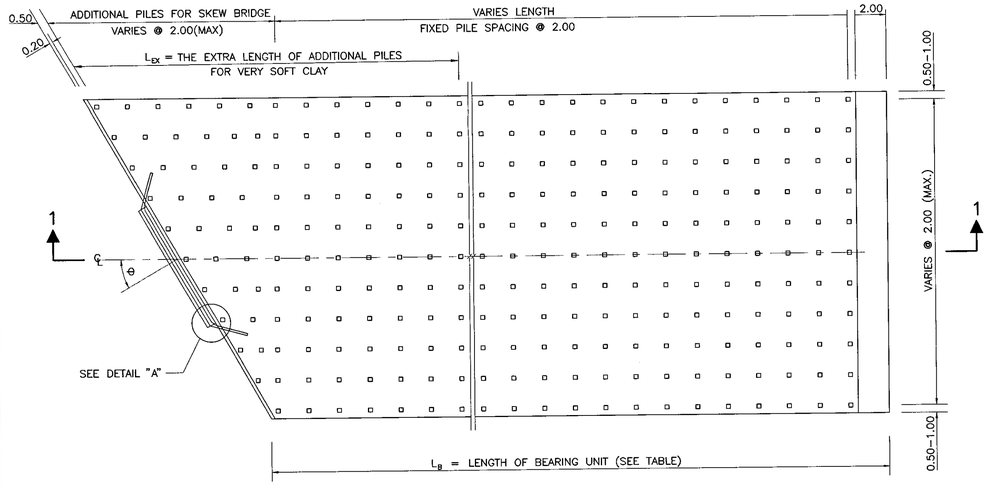

PLAN INDICATING THE LOCATION OF PILE (1°–45° SKEW BRIDGE)
SCALE 1 : 100

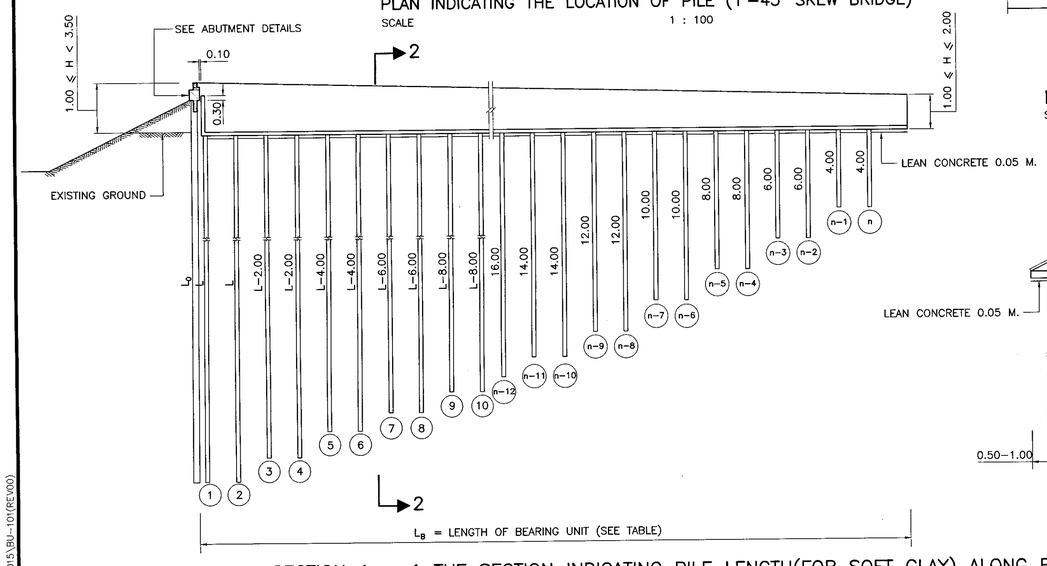

SECTION 1 – 1 THE SECTION INDICATING PILE LENGTH(FOR SOFT CLAY) ALONG BEARING UNIT
SCALE 1 : 100

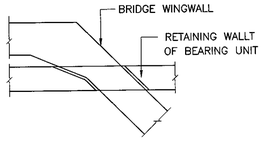

DETAIL "A"
SCALE 1 : 10

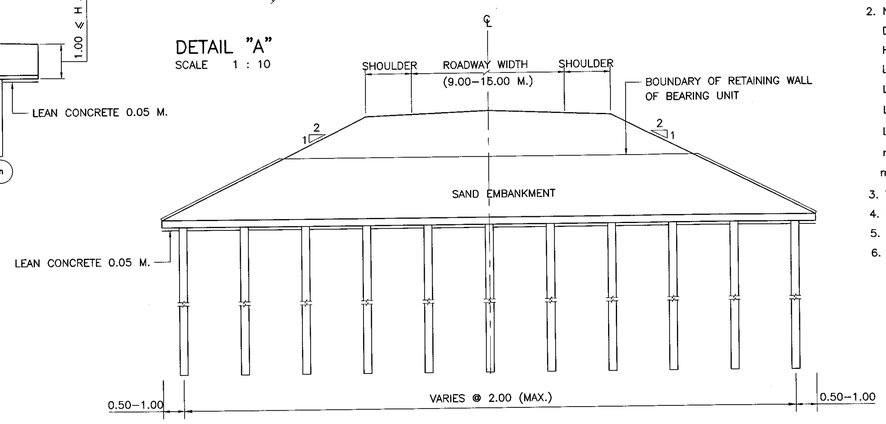

SECTION 2 – 2
SCALE 1 : 100

LENGTH OF BRIDGE ABUTMENT PILE (L_0)	LENGTH (L) OF PILE FOR (n) ROW														NO. OF PILE (n) PER ROW	LENGTH OF BEARING UNIT (L_B) $2(n-1)+3$
	(1)&(2) (L)	(3)&(4)	(5)&(6)	(7)&(8)	(9)&(10)	(11)&(12)	(13)&(14)	(15)&(16)	(17)&(18)	(19)&(20)	(21)&(22)	(23)&(24)	(25)&(26)	(27)&(28)		
$12.00 \leqslant L_0 < 14.000$	12.00	10.00	8.00	6.00	4.00										10	$21.00 + L_{EX}$
$14.00 \leqslant L_0 < 16.00$	14.00	12.00	10.00	8.00	6.00	4.00									12	$25.00 + L_{EX}$
$16.00 \leqslant L_0 < 18.00$	16.00	14.00	12.00	10.00	8.00	6.00	4.00								14	$29.00 + L_{EX}$
$18.00 \leqslant L_0 < 20.00$	18.00	16.00	14.00	12.00	10.00	8.00	6.00	4.00							16	$33.00 + L_{EX}$
$20.00 \leqslant L_0 < 22.00$	20.00	18.00	16.00	14.00	12.00	10.00	8.00	6.00	4.00						18	$37.00 + L_{EX}$
$22.00 \leqslant L_0 < 24.00$	22.00	20.00	18.00	16.00	14.00	12.00	10.00	8.00	6.00	4.00					20	$41.00 + L_{EX}$
$24.00 \leqslant L_0 < 26.00$	24.00	22.00	20.00	18.00	16.00	14.00	12.00	10.00	8.00	6.00	4.00				22	$45.00 + L_{EX}$
$26.00 \leqslant L_0 < 28.00$	26.00	24.00	22.00	20.00	18.00	16.00	14.00	12.00	10.00	8.00	6.00	4.00			24	$49.00 + L_{EX}$
$28.00 \leqslant L_0 < 30.00$	28.00	26.00	24.00	22.00	20.00	18.00	16.00	14.00	12.00	10.00	8.00	6.00	4.00		26	$53.00 + L_{EX}$
$30.00 \leqslant L_0$	30.00	28.00	26.00	24.00	22.00	20.00	18.00	16.00	14.00	12.00	10.00	8.00	6.00	4.00	28	$57.00 + L_{EX}$

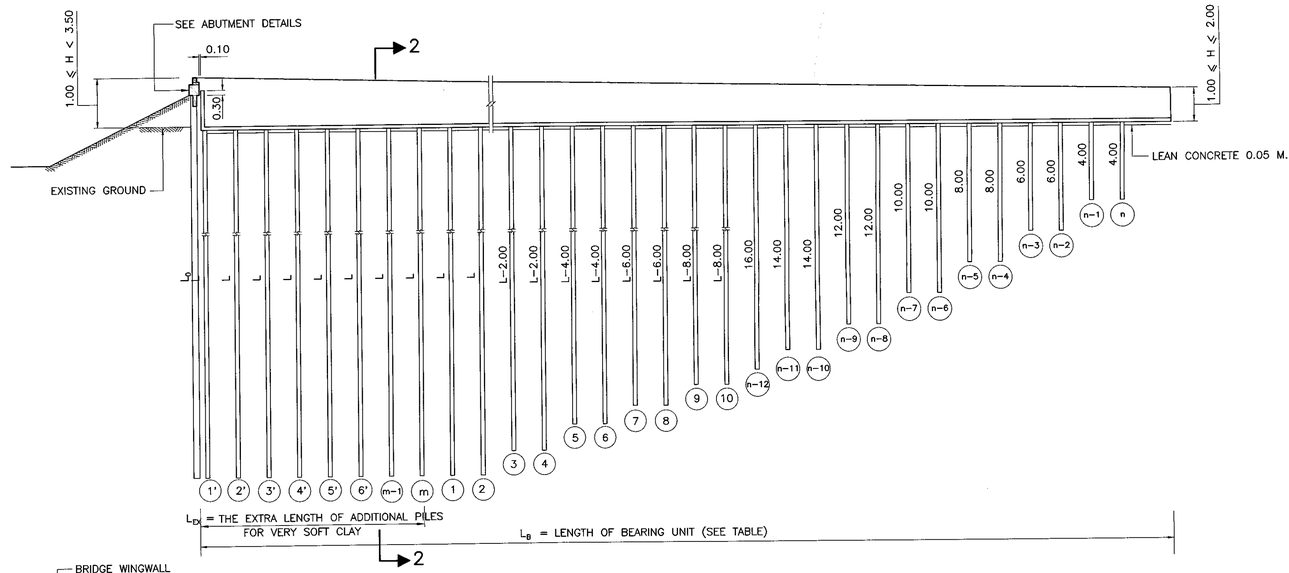

SECTION 1 – 1 THE SECTION INDICATING PILE LENGTH(FOR VERY SOFT CLAY) ALONG BEARING UNIT
SCALE 1 : 100

NOTES :

1. ALL DIMENSIONS SHOWN ARE IN METERS UNLESS OTHERWISE INDICATED.
2. NOTATION :
   - D = DIAMETER OF PILE
   - H = HIGHT OF RETAINING WALL
   - L = PILE LENGTH OF THE FIRST ROW OF BEARING UNIT AND THE ADDITIONAL PILE FOR SKEW BRIDGE
   - L_{EX} = THE EXTRA LENGTH OF ADDITIONAL PILES FOR VERY SOFT CLAY
   - L_B = LENGTH OF BEARING UNIT
   - L_0 = LENGTH OF BRIDGE ABUTMENT PILE
   - n = NUMBER OF PILE ROW
   - m = NUMBER OF PILE ROW FOR THE EXTRA LENGTH(L_{EX})
3. THIS DRAWING IS USED IN CONJUNCTION WITH DWG.BU–102, BU–104
4. WHEN TOTAL PILE LENGTH IS OVER 19.00 M., 0.26x0.26 M. PILES SHALL BE USED
5. THE MINIMUM EXTRA LENGTH SHALL BE INVESTIGATED ACCORDING TO SOIL CONDITIONS
6. THE LENGTH AND NUMBER OF PILE ROW SHALL BE CONSIDERED AS A GENERAL GUIDELINE ONLY. APPROPRIATE LENGTH AND NUMBER OF PILE ROW SHALL BE INVESTIGATED FORM THE SOIL CONDITIONS OF THE CONSTRUCTION SITE.

KINGDOM OF THAILAND

MINISTRY OF TRANSPORT
DEPARTMENT OF HIGHWAYS

STANDARD DRAWING
0°–45° SKEW BEARING UNIT
PILE ARRANGEMENT, SECTION AND DETAILS

REF.	REVISION	SIGNATURE	DATE

DESIGNED : D.O.H. & CONSULTANTS
CHECKED : BUREAU OF LOCATION & DESIGN
DATE : OCT 2015
SUBMITTED : (DIRECTOR OF LOCATION & DESIGN BUREAU)
SCALE : AS SHOWN
APPROVED : (FOR DIRECTOR GENERAL)
DWG NO. BU–101
SHEET NO. 296

D:\std dwg 2015\BU-101(REV00)

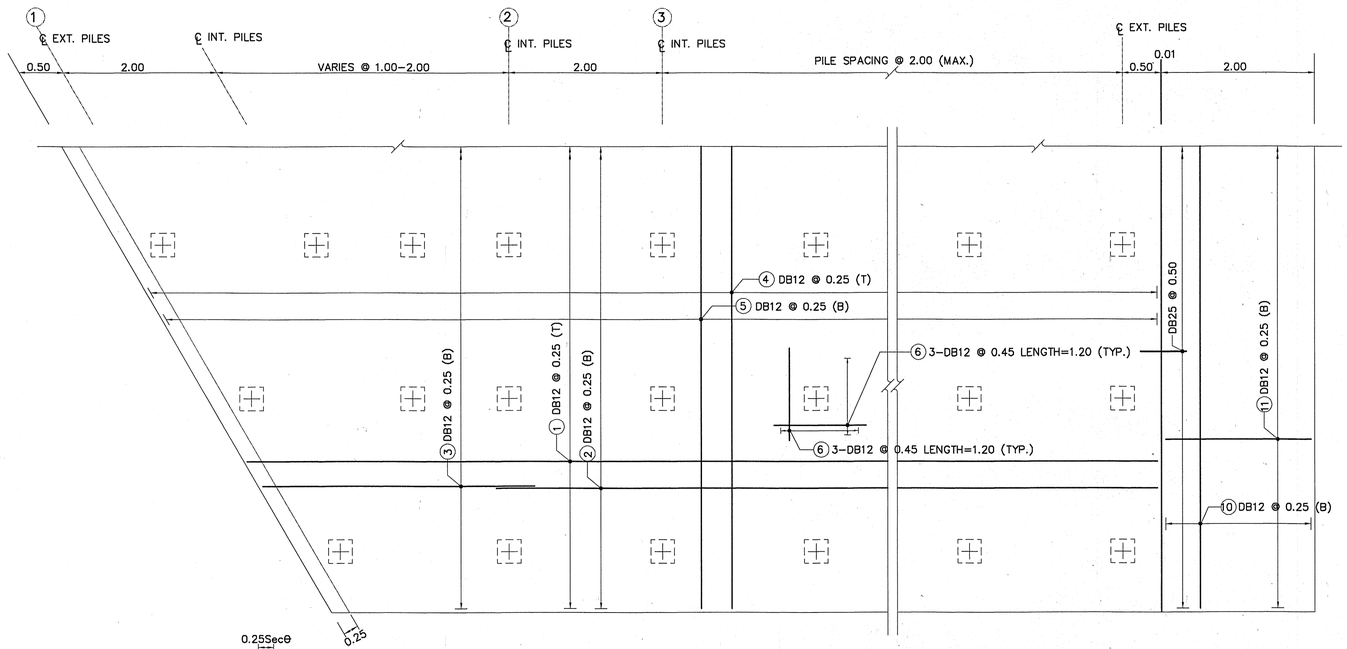

PLAN
SCALE 1 : 40

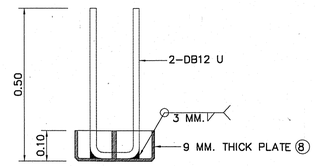

DETAIL "A"
SCALE 1 : 10

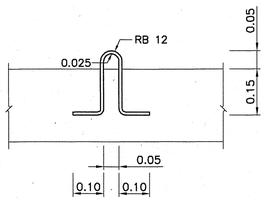

DETAIL "B"
SCALE 1 : 10

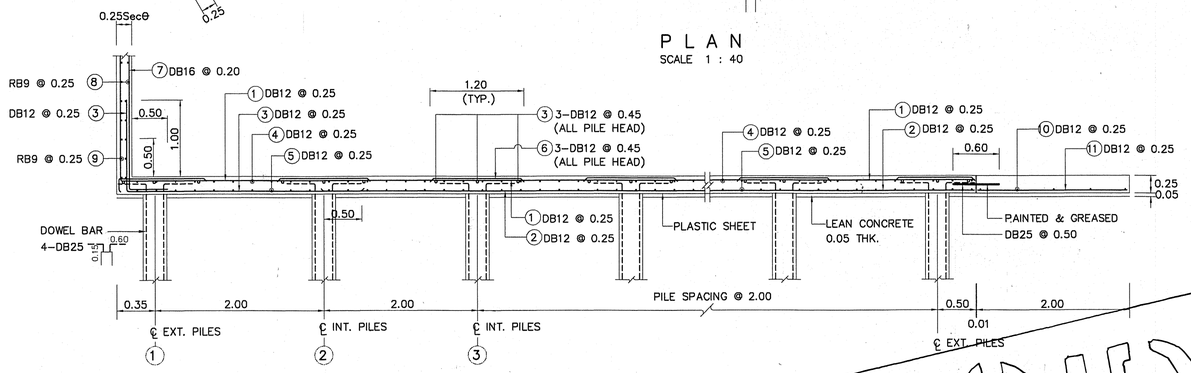

LONGITUDINAL SECTION REINFORCEMENT
SCALE 1 : 40

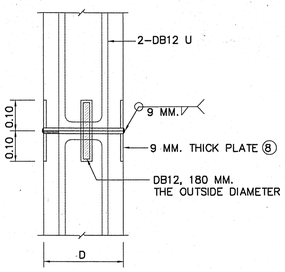

SECTION INDICATING
THE EXTENSION OF PILE
SCALE 1 : 10

NOTES :

1. ALL DIMENSIONS SHOWN ARE IN METERS UNLESS OTHERWISE INDICATED.
2. CONCRETE SHALL HAVE THE ULTIMATE COMPRESSIVE STRENGTH OF STANDARD CUBE 150x150x150 MM. AT 28 DAYS NOT LESS THAN 35 MPa. (357 KG/CM^2)
3. REINFORCEMENT STEEL,THE ROUND BAR (RB) SHALL CONFORM TO THE TIS 20, SR24 GRADE WHILE THE DEFORMED BAR (DB) SHALL CONFORM TO THE TIS 24, SD40 GRADE
4. CONCRETE COVERING SHALL BE 5.0 CM. (TO THE OUTER SURFACE OF REINFORCEMENT)
5. PLASTIC SHEET USED IN CONSTRUCTION SHALL HAVE THE FOLLOWING REQUIREMENT :
   5.1 THICKNESS OF 0.07 MM.
   5.2 WIDTH SHALL NOT BE LESS THAN 1.20 M.
   5.3 IT SHALL BE COLOURLESS, TRANSPARENT AND WATERPROOF, FREE FROM POROUS AREA, TURN AREA AND BLISTERING AREA WHICH ARE VISIBLE BY NAKED EYE. EDGE SHALL BE STRAIGHT
   5.4 OVERLAPPING NOT LESS THAN 0.20 M.
6. LEAN CONCRETE WHICH A PROPORTION OF CEMENT : SAND : AGGREGATE = 1:3:6 BY VOLUME AND 50 MM. THICKNESS CAN BE USED INSTEAD OF PLASTIC SHEET

NOTES FOR BEARING UNIT PC. PILES

1. CONCRETE SHALL HAVE A MINIMUM ULTIMATE COMPRESSIVE STRENGTH OF STANDARD CUBE 150x150x150 MM. AT 28 DAYS, NOT LESS THAN 45 MPa (459 KG/CM^2)
2. PRESTRESSING WIRES SHALL BE STRESS–RELIEVED WIRES CONFORMING TO TIS 95 AND THE FOLLOWING REQUREMENT :

WIRE SIZE	MINIMUM ULTIMATE TENSILE STRENGTH	INTIAL PRESTRESSING FORCE
ø5 MM.	18,040 KG/CM^2 (1770 MPa)	2,475 KG. (24.27 KN)
ø7 MM.	17,020 KG/CM^2 (1670 MPa)	4,585 KG. (44.97 KN)

3. STEEL PLATE SHALL BE CONFORMED TO THE TIS STANDARD 116 GRADE Fe 30
4. FIELD WELDS SHALL BE CONNECTED BY ELECTRODE (E60), CONFORM TO TIS 49
5. NUMBER OF PRESTRESSING WIRES SHALL NOT LESS THAN THE FOLLOWING TABLE :

PILE SIZE (DxD)	MAX. LENGTH PER PILE	PRESTRESSING WIRES	
		ø5 MM.	ø7 MM.
□– 0.22x0.22 M.	19.00	14	8
□– 0.26x0.26 M.	20.00	20	12

6. WHEN TOTAL PILE LENGTH ARE OVER 19.00 M. USING PILE SIZE 0.26x0.26 M.
7. THIS DRAWING IS USED IN CONJUNCTION WITH DWG.BU–101, BU–103 AND BU–104
⑧ FOR CONNECTION OF TWO PILES ONLY

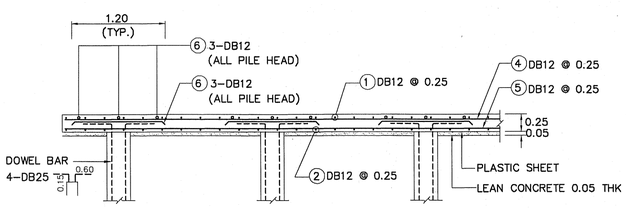

CROSS SECTION REINFORCEMENT
SCALE 1 : 40

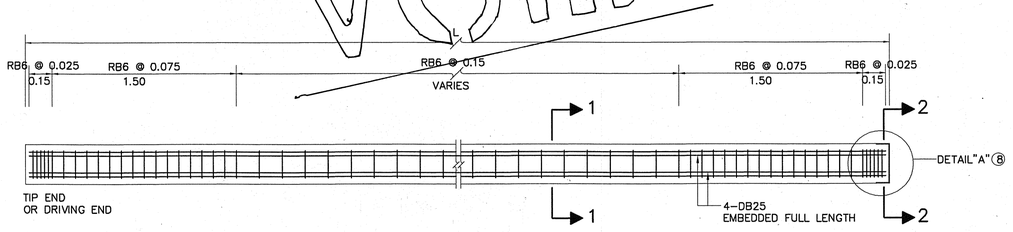

PILE REINFORCEMENT DETAIL
SCALE 1 : 20

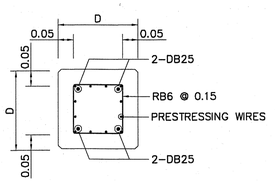

SECTION 1 – 1
SCALE 1 : 10

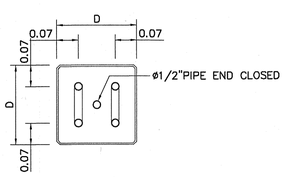

SECTION 2 – 2
SCALE 1 : 10

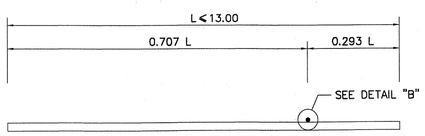

ONE LIFTING POINT

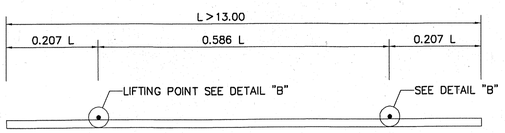

TWO LIFTING POINT

VOID

REV.	REVISION	SIGNATURE	DATE
REV.1	REVISION 1/2017		JUN 2017

KINGDOM OF THAILAND

MINISTRY OF TRANSPORT
DEPARTMENT OF HIGHWAYS

STANDARD DRAWING
0°–45° SKEW BEARING UNIT
REINFORCEMENT AND DETAILS

DESIGNED : D.O.H. & CONSULTANTS	CHECKED : BUREAU OF LOCATION & DESIGN	DATE : OCT 2015
SUBMITTED : (DIRECTOR OF LOCATION & DESIGN BUREAU)		SCALE : AS SHOWN
APPROVED : (FOR DIRECTOR GENERAL)		DWG NO. BU–102
		SHEET NO. 297/R1

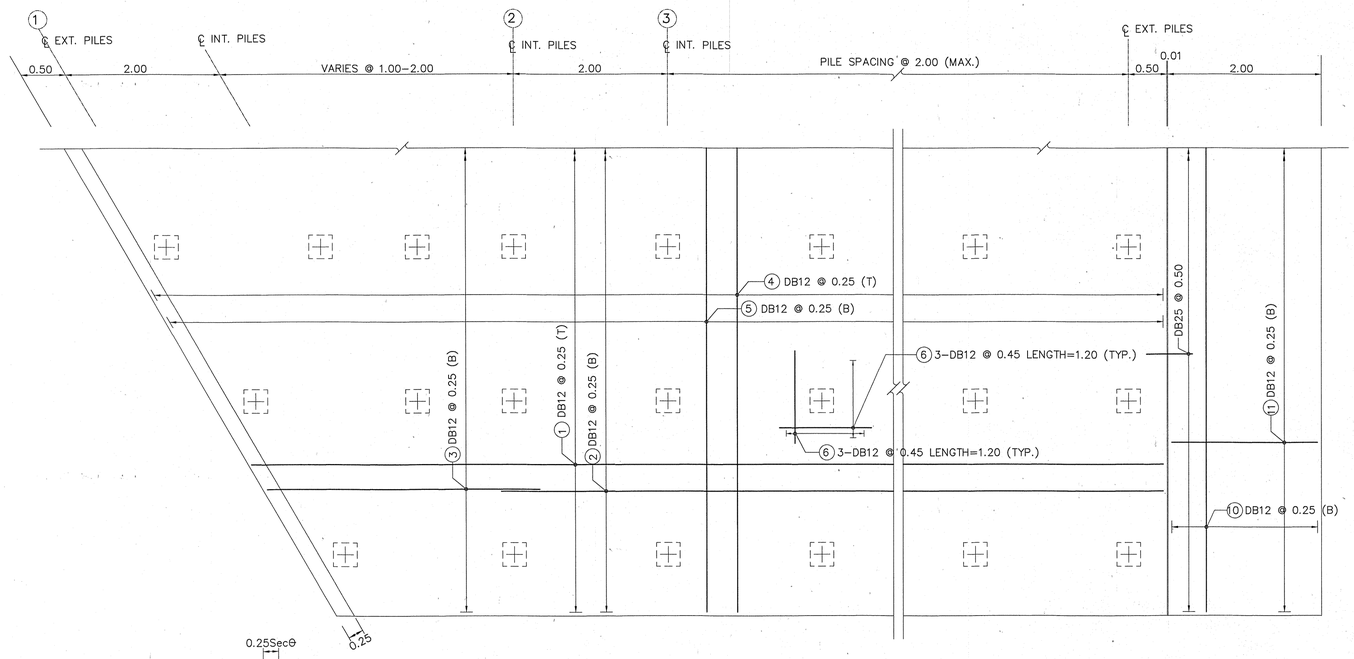

P L A N
SCALE 1 : 40

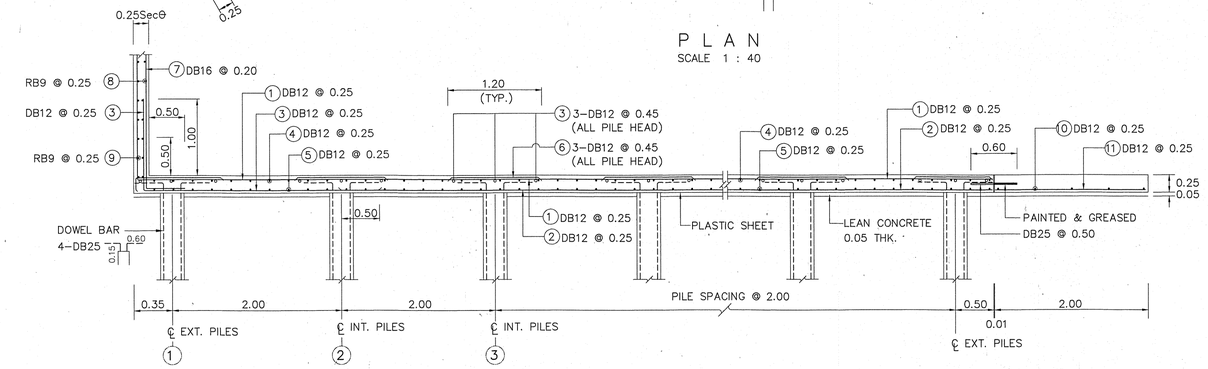

LONGITUDINAL SECTION REINFORCEMENT
SCALE 1 : 40

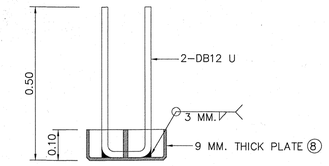

DETAIL "A"
SCALE 1 : 10

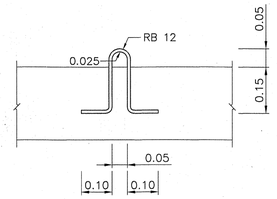

DETAIL "B"
SCALE 1 : 10

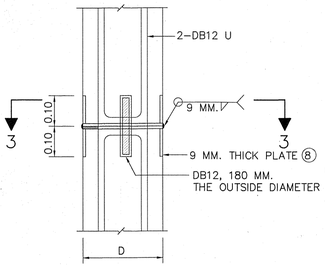

SECTION INDICATING
THE EXTENSION OF PILE
SCALE 1 : 10

NOTES :

1. ALL DIMENSIONS SHOWN ARE IN METERS UNLESS OTHERWISE INDICATED.
2. CONCRETE SHALL HAVE THE ULTIMATE COMPRESSIVE STRENGTH OF STANDARD CUBE 150x150x150 MM. AT 28 DAYS NOT LESS THAN 35 MPa. (357 KG/CM^2)
3. REINFORCEMENT STEEL,THE ROUND BAR (RB) SHALL CONFORM TO THE TIS 20, SR24 GRADE WHILE THE DEFORMED BAR (DB) SHALL CONFORM TO THE TIS 24, SD40 GRADE
4. CONCRETE COVERING SHALL BE 5.0 CM. (TO THE OUTER SURFACE OF REINFORCEMENT)
5. PLASTIC SHEET USED IN CONSTRUCTION SHALL HAVE THE FOLLOWING REQUREMENT :
   5.1 THICKNESS OF 0.07 MM.
   5.2 WIDTH SHALL NOT BE LESS THAN 1.20 M.
   5.3 IT SHALL BE COLOURLESS, TRANSPARENT AND WATERPROOF, FREE FROM POROUS AREA, TURN AREA AND BLISTERING AREA WHICH ARE VISIBLE BY NAKED EYE. EDGE SHALL BE STRAIGHT
   5.4 OVERLAPPING NOT LESS THAN 0.20 M.
6. LEAN CONCRETE WHICH A PROPORTION OF CEMENT : SAND : AGGREGATE = 1:3:6 BY VOLUME AND 50 MM. THICKNESS CAN BE USED INSTEAD OF PLASTIC SHEET

NOTES FOR BEARING UNIT PC. PILES

1. CONCRETE SHALL HAVE A MINIMUM ULTIMATE COMPRESSIVE STRENGTH OF STANDARD CUBE 150x150x150 MM. AT 28 DAYS, NOT LESS THAN 45 MPa (459 KG/CM^2)
2. PRESTRESSING WIRES SHALL BE STRESS–RELIEVED WIRES CONFORMING TO TIS 95 AND THE FOLLOWING REQUREMENT :

WIRE SIZE	MINIMUM ULTIMATE TENSILE STRENGTH	INTIAL PRESTRESSING FORCE
ø5 MM.	18,040 KG/CM^2 (1770 MPa)	2,475 KG. (24.27 KN)
ø7 MM.	17,020 KG/CM^2 (1670 MPa)	4,585 KG. (44.97 KN)

3. STEEL PLATE SHALL BE CONFORMED TO THE TIS STANDARD 116 GRADE Fe 30
4. FIELD WELDS SHALL BE CONNECTED BY ELECTRODE (E60), CONFORM TO TIS 49
5. NUMBER OF PRESTRESSING WIRES SHALL NOT LESS THAN THE FOLLOWING TABLE :

PILE SIZE (DxD)	MAX. LENGTH PER PILE	PRESTRESSING WIRES	
		ø5 MM.	ø7 MM.
⍁ 0.22x0.22 M.	19.00	16	8
⍁ 0.26x0.26 M.	20.00	20	12

6. WHEN TOTAL PILE LENGTH ARE OVER 19.00 M. USING PILE SIZE 0.26x0.26 M.
7. THIS DRAWING IS USED IN CONJUNCTION WITH DWG.BU–101, BU–103 AND BU–104
⑧ FOR CONNECTION OF TWO PILES ONLY

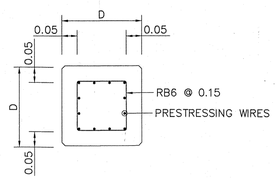

SECTION 1 – 1
SCALE 1 : 10

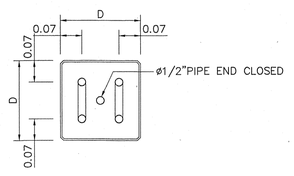

SECTION 3 –3
SCALE 1 : 10

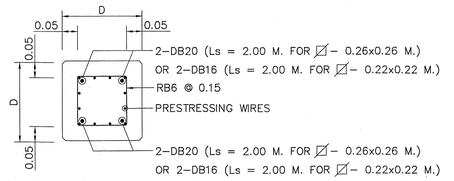

SECTION 2 – 2
SCALE 1 : 10

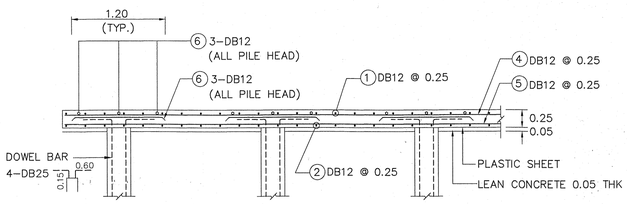

CROSS SECTION REINFORCEMENT
SCALE 1 : 40

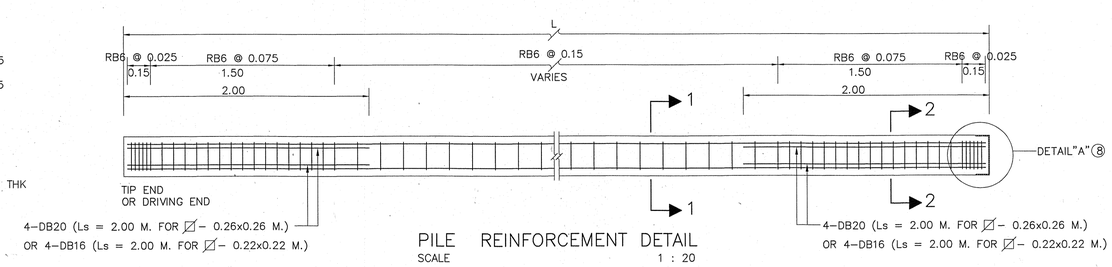

PILE REINFORCEMENT DETAIL
SCALE 1 : 20

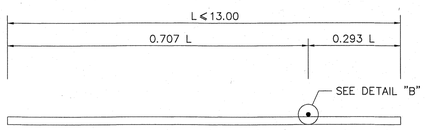

ONE LIFTING POINT

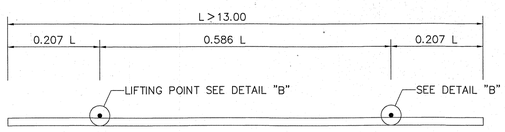

TWO LIFTING POINT

REV.	REVISION	SIGNATURE	DATE
REV.2	REVISION 2/2019		DEC 2019
REV.1	REVISION 1/2017		JUN 2017

KINGDOM OF THAILAND
MINISTRY OF TRANSPORT
DEPARTMENT OF HIGHWAYS

STANDARD DRAWING
0°–45° SKEW BEARING UNIT
REINFORCEMENT AND DETAILS

DESIGNED : D.O.H. & CONSULTANTS **CHECKED :** BUREAU OF LOCATION & DESIGN **DATE :** OCT 2015
SUBMITTED : (DIRECTOR OF LOCATION & DESIGN BUREAU) **SCALE :** AS SHOWN
APPROVED : (FOR DIRECTOR GENERAL) **DWG NO.** BU–102
SHEET NO. 297/R2

D:\DOH\2–แบบมาตรฐาน กรมทางหลวง\1–STANDARD FINAL–1–CAD(ENG)_2015\6_แก้ไขครั้งที่ 2\BU–102(REV02)

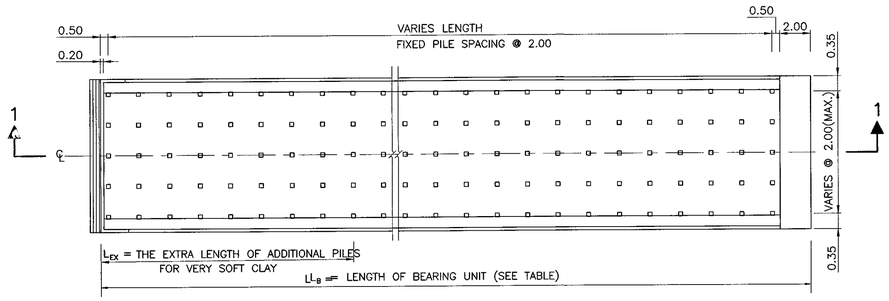

PLAN INDICATING THE LOCATION OF PILE (FOR 0° SKEW BRIDGE)
SCALE 1 : 100

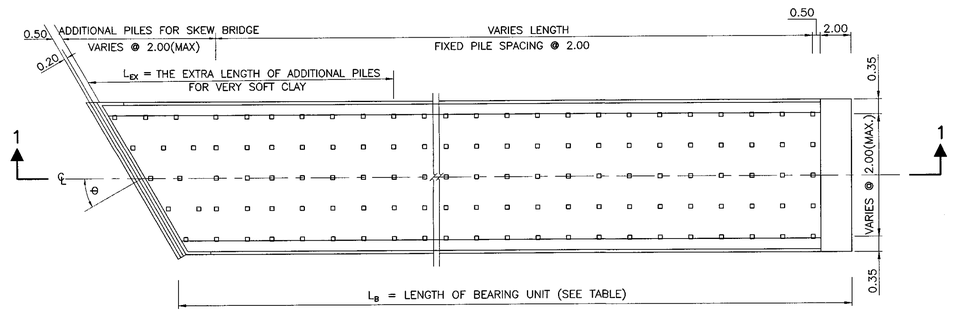

PLAN INDICATING THE LOCATION OF PILE (FOR 1°–45° SKEW BRIDGE)
SCALE 1 : 100

LENGTH OF BRIDGE ABUTMENT PILE (L_o)	LENGTH (L) OF PILE FOR (n) ROW														NO. OF PILE (n) PER ROW	LENGTH OF BEARING UNIT (L_B) $2(n-1)+3$
	(1)&(2) (L)	(3)&(4)	(5)&(6)	(7)&(8)	(9)&(10)	(11)&(12)	(13)&(14)	(15)&(16)	(17)&(18)	(19)&(20)	(21)&(22)	(23)&(24)	(25)&(26)	(27)&(28)		
$12.00 \leqslant L_o < 14.000$	12.00	10.00	8.00	6.00	4.00										10	21.00 + L_{ex}
$14.00 \leqslant L_o < 16.00$	14.00	12.00	10.00	8.00	6.00	4.00									12	25.00 + L_{ex}
$16.00 \leqslant L_o < 18.00$	16.00	14.00	12.00	10.00	8.00	6.00	4.00								14	29.00 + L_{ex}
$18.00 \leqslant L_o < 20.00$	18.00	16.00	14.00	12.00	10.00	8.00	6.00	4.00							16	33.00 + L_{ex}
$20.00 \leqslant L_o < 22.00$	20.00	18.00	16.00	14.00	12.00	10.00	8.00	6.00	4.00						18	37.00 + L_{ex}
$22.00 \leqslant L_o < 24.00$	22.00	20.00	18.00	16.00	14.00	12.00	10.00	8.00	6.00	4.00					20	41.00 + L_{ex}
$24.00 \leqslant L_o < 26.00$	24.00	22.00	20.00	18.00	16.00	14.00	12.00	10.00	8.00	6.00	4.00				22	45.00 + L_{ex}
$26.00 \leqslant L_o < 28.00$	26.00	24.00	22.00	20.00	18.00	16.00	14.00	12.00	10.00	8.00	6.00	4.00			24	49.00 + L_{ex}
$28.00 \leqslant L_o < 30.00$	28.00	26.00	24.00	22.00	20.00	18.00	16.00	14.00	12.00	10.00	8.00	6.00	4.00		26	53.00 + L_{ex}
$30.00 \leqslant L_o$	30.00	28.00	26.00	24.00	22.00	20.00	18.00	16.00	14.00	12.00	10.00	8.00	6.00	4.00	28	57.00 + L_{ex}

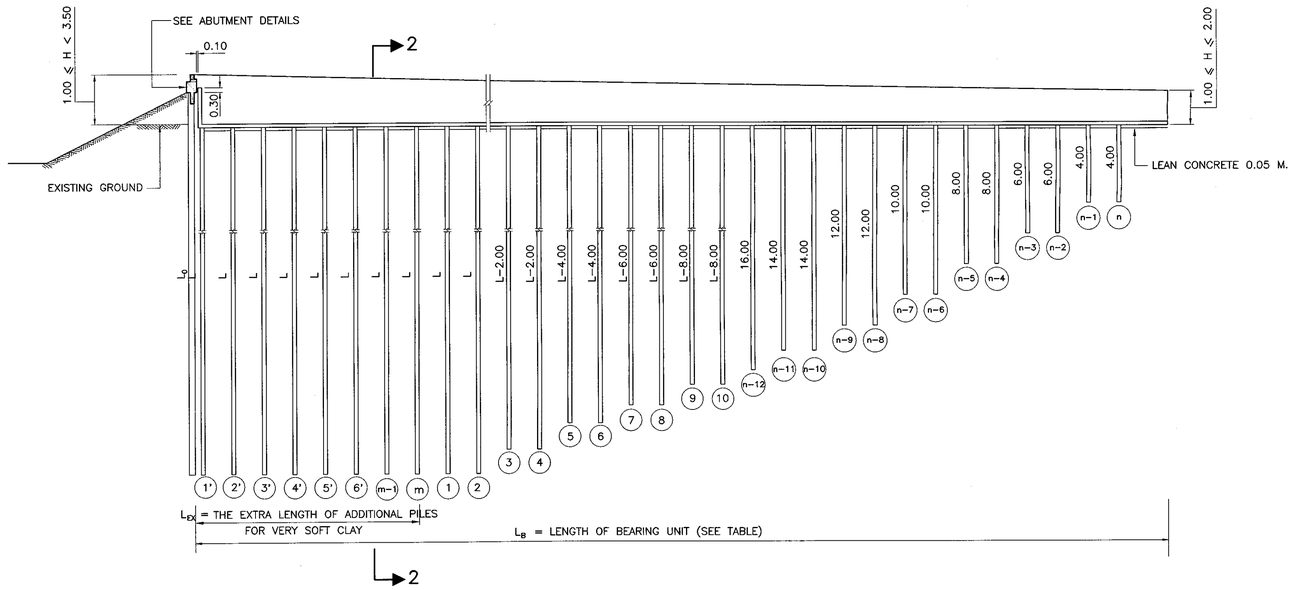

SECTION 1 – 1 THE SECTION INDICATING PILE LENGTH(FOR VERY SOFT CLAY) ALONG BEARING UNIT
SCALE 1 : 100

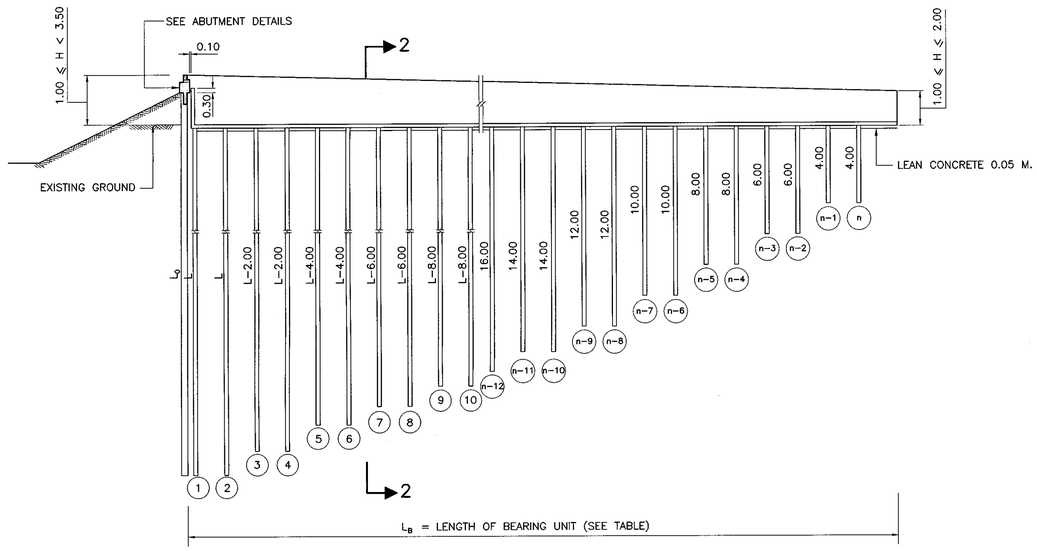

SECTION 1 – 1 THE SECTION INDICATING PILE LENGTH(FOR SOFT CLAY) ALONG BEARING UNIT
SCALE 1 : 100

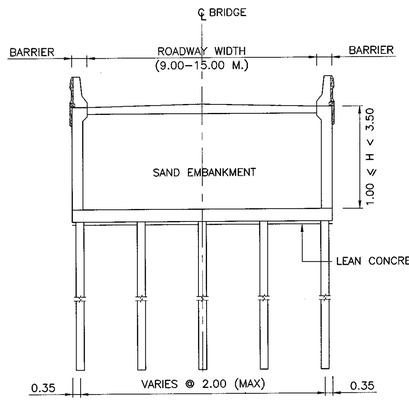

SECTION 2 – 2
SCALE 1 : 100

NOTES :

1. ALL DIMENSIONS SHOWN ARE IN METERS UNLESS OTHERWISE INDICATED.
2. NOTATION :
   - D = DIAMETER OF PILE
   - H = HIGHT OF RETAINING WALL
   - L = PILE LENGTH OF THE FIRST ROW OF BEARING UNIT AND THE ADDITIONAL PILE FOR SKEW BRIDGE
   - L_{EX} = THE EXTRA LENGTH OF ADDITIONAL PILES FOR VERY SOFT CLAY
   - L_B = LENGTH OF BEARING UNIT
   - L_o = LENGTH OF BRIDGE ABUTMENT PILE
   - n = NUMBER OF PILE ROW
   - m = NUMBER OF PILE ROW FOR THE EXTRA LENGTH(L_{EX})
3. THIS DRAWING IS USED IN CONJUNCTION WITH DWG.BU–102, BU–104
4. WHEN TOTAL PILE LENGTH IS OVER 19.00 M., 0.26x0.26 M. PILES SHALL BE USED
5. THE MINIMUM EXTRA LENGTH SHALL BE INVESTIGATED ACCORDING TO SOIL CONDITIONS
6. THE LENGTH AND NUMBER OF PILE ROW SHALL BE CONSIDERED AS A GENERAL GUIDELINE ONLY. APPROPRIATE LENGTH AND NUMBER OF PILE ROW SHALL BE INVESTIGATED FORM THE SOIL CONDITIONS OF THE CONSTRUCTION SITE.

REF.	REVISION	SIGNATURE	DATE

KINGDOM OF THAILAND
MINISTRY OF TRANSPORT
DEPARTMENT OF HIGHWAYS

STANDARD DRAWING
0°–45° SKEW BEARING UNIT
PILE ARRANGEMENT AND DETAILS

DESIGNED : D.O.H. & CONSULTANTS	CHECKED : BUREAU OF LOCATION & DESIGN	DATE : OCT 2015
SUBMITTED : (DIRECTOR OF LOCATION & DESIGN BUREAU)		SCALE : AS SHOWN
APPROVED : (FOR DIRECTOR GENERAL)		DWG NO. BU–103
		SHEET NO. 298

D:\std dwg 2015\BU-103(REV00)

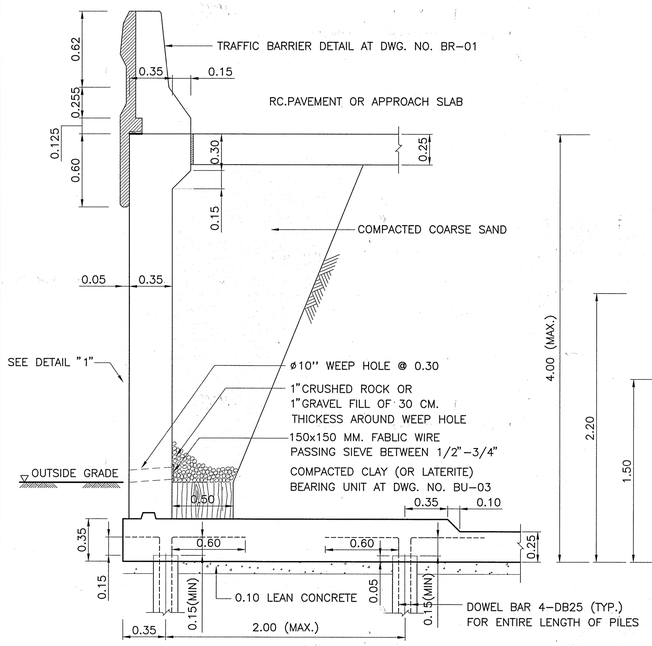

SECTION

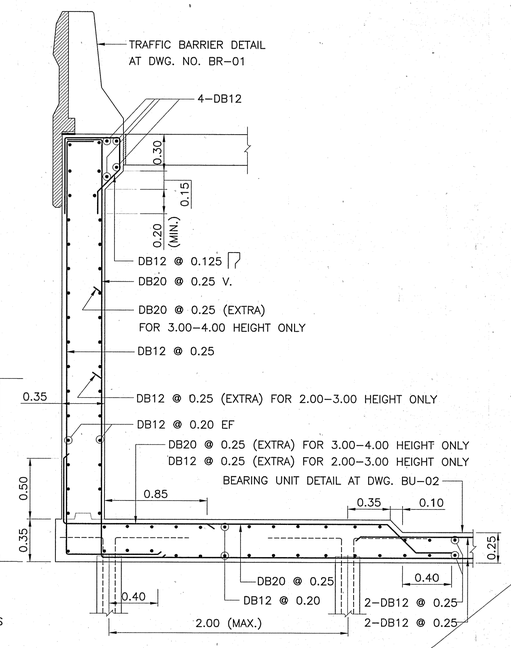

REINFORCEMENT

RETAINING WALL-OVER-BEARING UNIT: TYPE ST-1A

SCALE 1 : 25

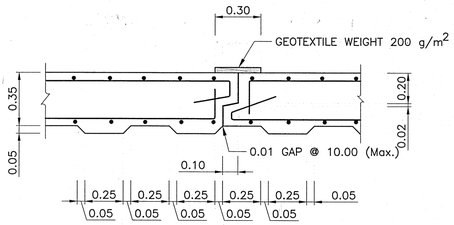

OUTSIDE FACE

DETAIL "1"

SCALE 1 : 20

ISOMETRIC OF APPROACH STRUCTURE WITH RETAINING WALL

SCALE 1 : 25

SECTION OF RETAINING WALL ST-1B

NOT TO SCALE

VOID

NOTES :

1. ALL DIMENSIONS SHOWN ARE IN METERS UNLESS OTHERWISE INDICATED.
2. LIVE LOADING : VEHICLE LOAD HL-93
3. A MINIMUM ULTIMATE COMPRESSIVE STRENGTH FOR A 150x150x150 MM. CUBE AT 28 DAYS AS FOLLOWS:
   - A) RETAINING WALL 35 MPa. (357 KG/CM^2)
   - B) FOR FOOTING 35 MPa. (357 KG/CM^2)
   - C) FOR SIDEWALK AND BARRIER 35 MPa. (357 KG/CM^2)
4. REBARS SMALLER THAN RB9 MM. SHALL BE TIS 20 GRADE SR 24 PLAIN ROUND BARS, OTHERS SHALL BE TIS 24 GRADE SD 40 DEFORMED BARS UNLESS OTHERWISE INDICATED.
5. THE RETAINING WALL TYPE ST-1A IS USED IN CONJUNCTION WITH DWG. BU-102 AND BU-103
6. * THE RETAINING WALL TYPE ST-1B IS USED WHEN BEARING CAPACITY IS OVER 0.10 MPa (10 TON/M^2)

REF.	REVISION	SIGNATURE	DATE

KINGDOM OF THAILAND

MINISTRY OF TRANSPORT

DEPARTMENT OF HIGHWAYS

STANDARD DRAWING

0°-45° SKEW BEARING UNIT

R.C. RETANING WALL DETAILS

DESIGNED : D.O.H. & CONSULTANTS	**CHECKED :** BUREAU OF LOCATION & DESIGN	**DATE :** OCT 2015
SUBMITTED : (DIRECTOR OF LOCATION & DESIGN BUREAU)		**SCALE :** AS SHOWN
APPROVED : (FOR DIRECTOR GENERAL)		**DWG NO.** BU-104
		SHEET NO. 299

D:\std dwg 2015\BU-104(REV00)

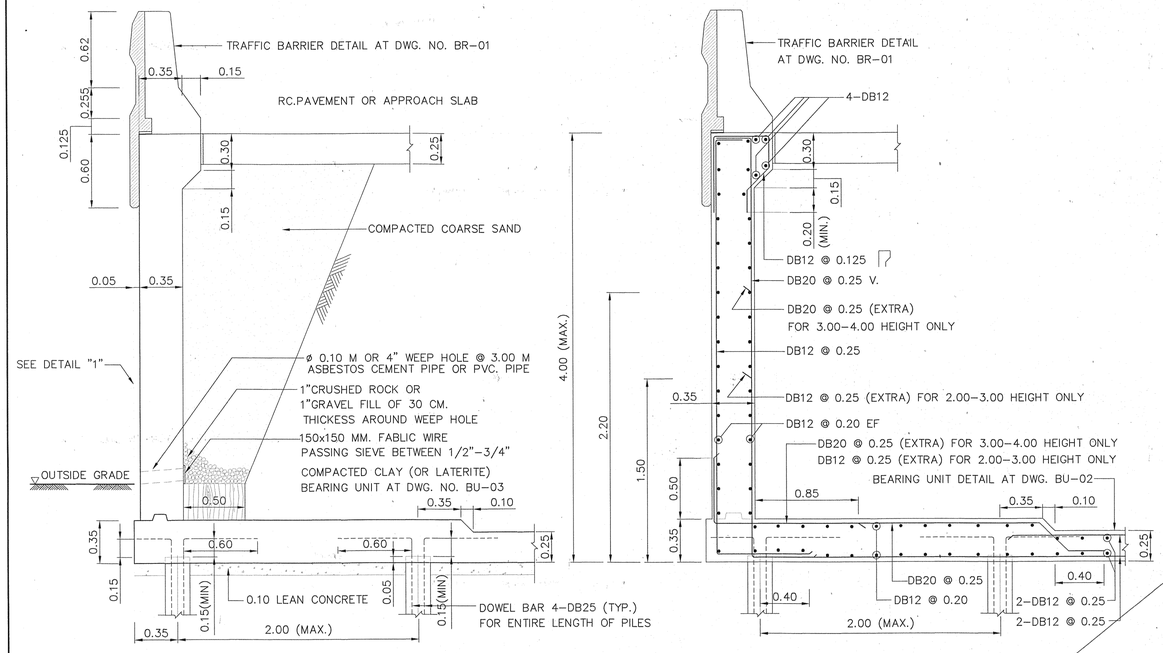

SECTION

REINFORCEMENT

RETAINING WALL-OVER-BEARING UNIT: TYPE ST-1A

SCALE 1 : 25

ISOMETRIC OF APPROACH STRUCTURE WITH RETAINING WALL

SCALE 1 : 25

OUTSIDE FACE

DETAIL "1"

SCALE 1 : 20

SECTION OF RETAINING WALL ST-1B

NOT TO SCALE

NOTES :

1. ALL DIMENSIONS SHOWN ARE IN METERS UNLESS OTHERWISE INDICATED.
2. LIVE LOADING : VEHICLE LOAD HL-93
3. A MINIMUM ULTIMATE COMPRESSIVE STRENGTH FOR A 150x150x150 MM. CUBE AT 28 DAYS AS FOLLOWS:
   - A) RETAINING WALL 35 MPa. (357 KG/CM^2)
   - B) FOR FOOTING 35 MPa. (357 KG/CM^2)
   - C) FOR SIDEWALK AND BARRIER 35 MPa. (357 KG/CM^2)
4. REBARS SMALLER THAN RB9 MM. SHALL BE TIS 20 GRADE SR 24 PLAIN ROUND BARS, OTHERS SHALL BE TIS 24 GRADE SD 40 DEFORMED BARS UNLESS OTHERWISE INDICATED.
5. THE RETAINING WALL TYPE ST-1A IS USED IN CONJUNCTION WITH DWG. BU-102 AND BU-103
6. * THE RETAINING WALL TYPE ST-1B IS USED WHEN BEARING CAPACITY IS OVER 0.10 MPa (10 TON/M^2)

REV.	REVISION	SIGNATURE	DATE
REV.1	REVISION 1/2019		DEC 2019

KINGDOM OF THAILAND

MINISTRY OF TRANSPORT

DEPARTMENT OF HIGHWAYS

STANDARD DRAWING

0°-45° SKEW BEARING UNIT

R.C. RETANING WALL DETAILS

DESIGNED : D.O.H. & CONSULTANTS	**CHECKED :** BUREAU OF LOCATION & DESIGN	**DATE :** OCT 2015
SUBMITTED : (DIRECTOR OF LOCATION & DESIGN BUREAU)		**SCALE :** AS SHOWN
APPROVED : (FOR DIRECTOR GENERAL)		**DWG NO.** BU-104
		SHEET NO. 299/R1

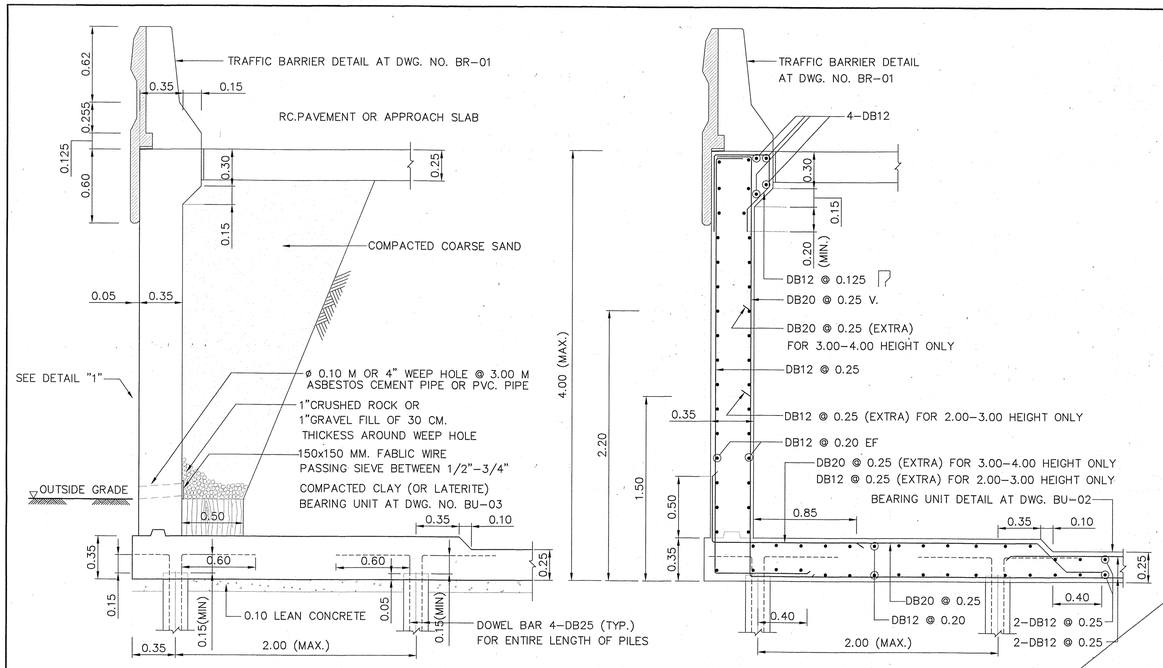

RETAINING WALL-OVER-BEARING UNIT: TYPE ST-1A
SCALE 1 : 25

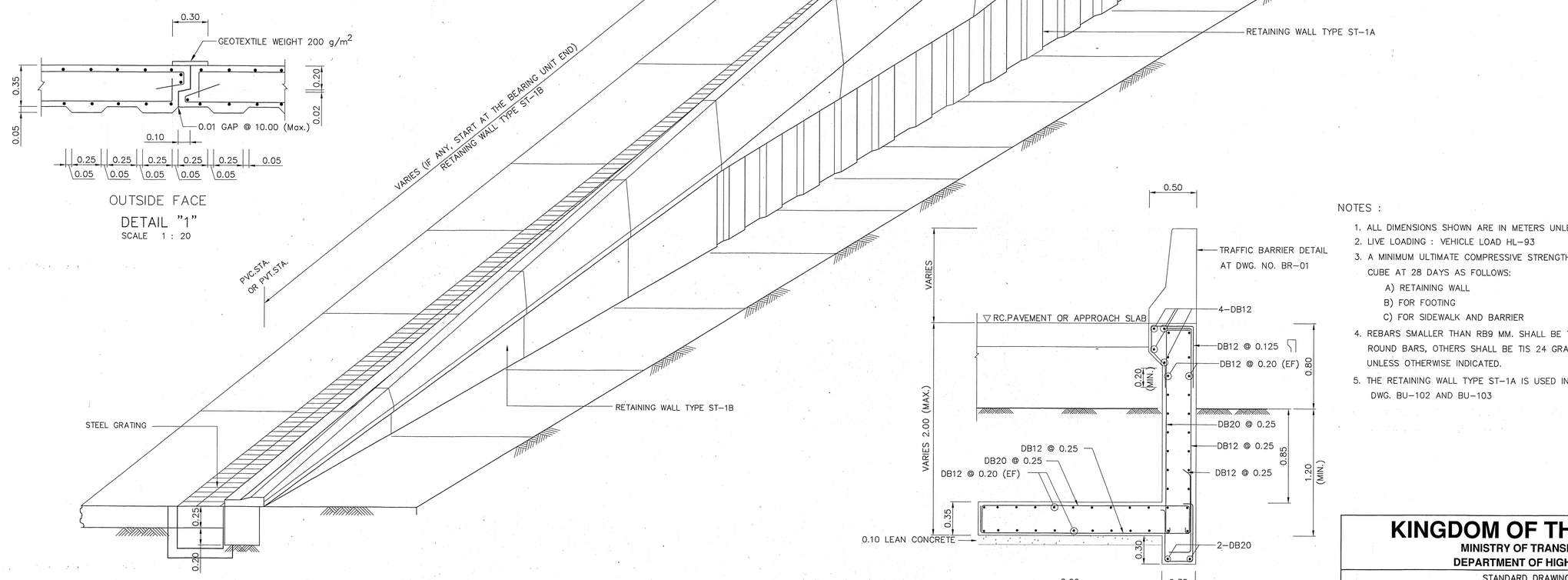

ISOMETRIC OF APPROACH STRUCTURE WITH RETAINING WALL
SCALE 1 : 25

OUTSIDE FACE

DETAIL "1"
SCALE 1 : 20

SECTION OF RETAINING WALL ST-1B
NOT TO SCALE

NOTES :

1. ALL DIMENSIONS SHOWN ARE IN METERS UNLESS OTHERWISE INDICATED.
2. LIVE LOADING : VEHICLE LOAD HL-93
3. A MINIMUM ULTIMATE COMPRESSIVE STRENGTH FOR A 150x150x150 MM. CUBE AT 28 DAYS AS FOLLOWS:
   - A) RETAINING WALL 35 MPa. (357 KG/CM^2)
   - B) FOR FOOTING 35 MPa. (357 KG/CM^2)
   - C) FOR SIDEWALK AND BARRIER 35 MPa. (357 KG/CM^2)
4. REBARS SMALLER THAN RB9 MM. SHALL BE TIS 20 GRADE SR 24 PLAIN ROUND BARS, OTHERS SHALL BE TIS 24 GRADE SD 40 DEFORMED BARS UNLESS OTHERWISE INDICATED.
5. THE RETAINING WALL TYPE ST-1A IS USED IN CONJUNCTION WITH DWG. BU-102 AND BU-103

REV.	REVISION	SIGNATURE	DATE
REV.1	REVISION 1/2019		DEC 2019

KINGDOM OF THAILAND

MINISTRY OF TRANSPORT
DEPARTMENT OF HIGHWAYS

STANDARD DRAWING
0°-45° SKEW BEARING UNIT
R.C. RETANING WALL DETAILS

DESIGNED : D.O.H. & CONSULTANTS	**CHECKED :** BUREAU OF LOCATION & DESIGN	**DATE :** OCT 2015
SUBMITTED : (DIRECTOR OF LOCATION & DESIGN BUREAU)		**SCALE :** AS SHOWN
APPROVED : (FOR DIRECTOR GENERAL)		**DWG NO.** BU-104
		SHEET NO. 299/R1

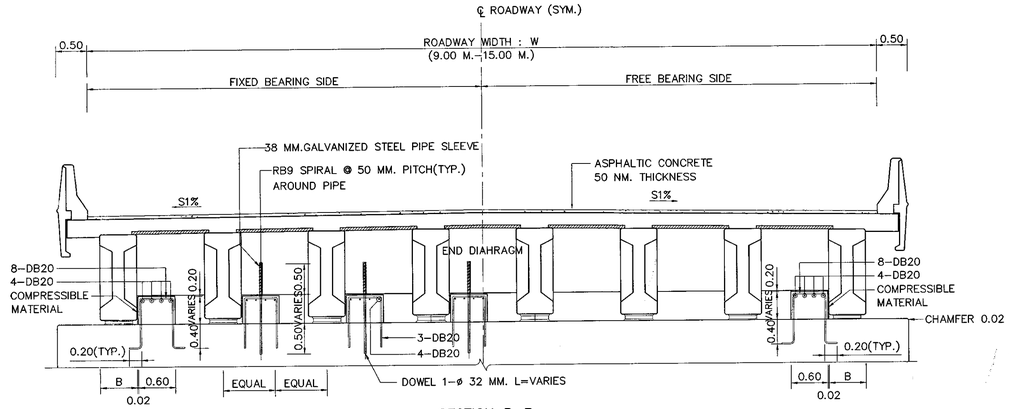

SECTION B–B

BUFFER DETAILS TYPE I (SEISMIC LEVEL 1A AND 1B)

SCALE 1 : 50

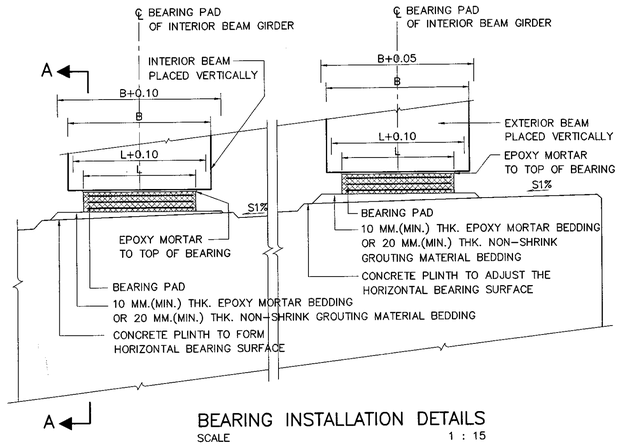

BEARING INSTALLATION DETAILS

SCALE 1 : 15

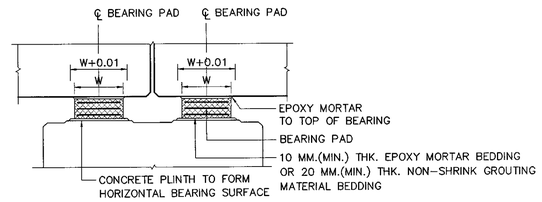

SECTION A – A

SCALE 1 : 15

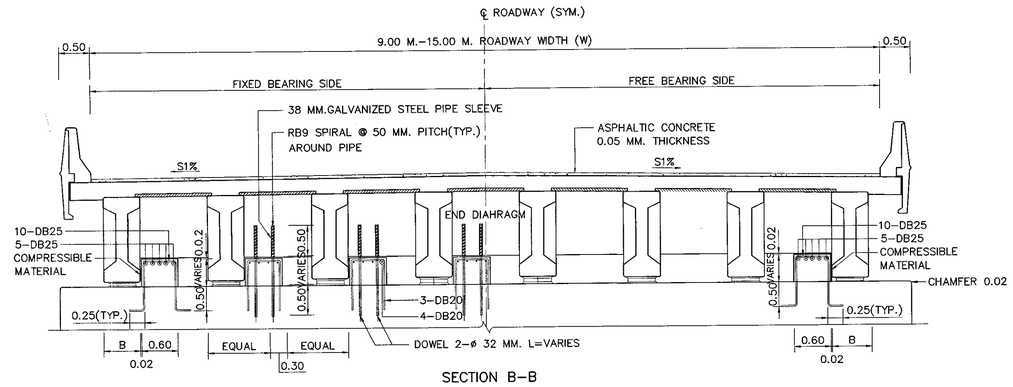

SECTION B–B

BUFFER DETAILS TYPE II (SEISMIC LEVEL 2)

SCALE 1 : 50

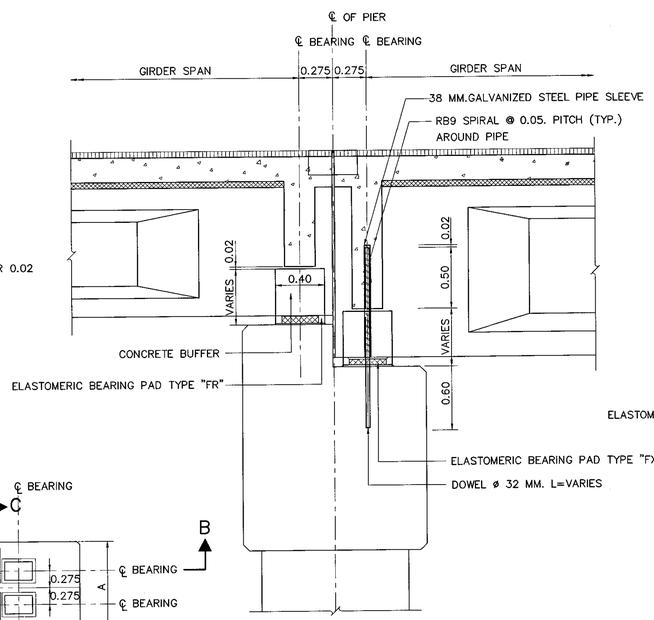

DIFFERENTIAL DEPTH OF I – GIRDER

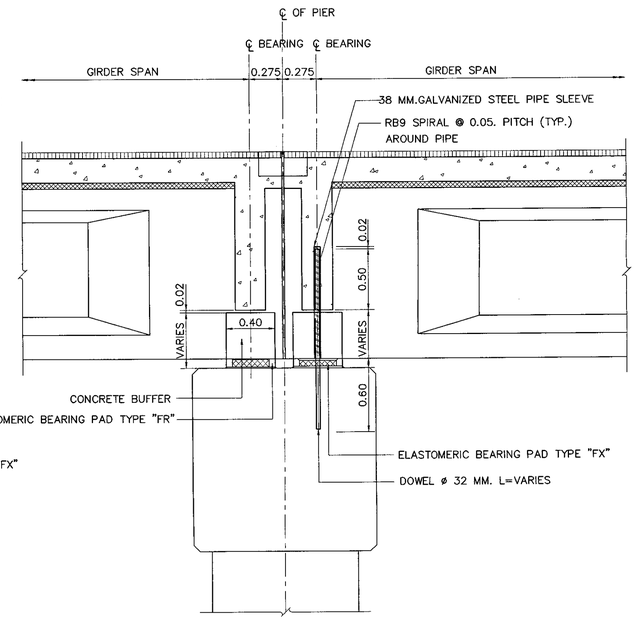

NON DIFFERENTIAL DEPTH OF I – GIRDER

SECTION C – C

SCALE 1 : 25

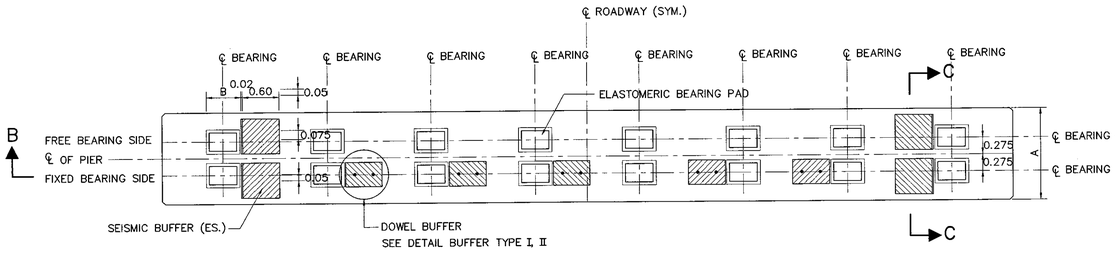

PLAN BUFFER AND BEARING PAD

SCALE 1 : 50

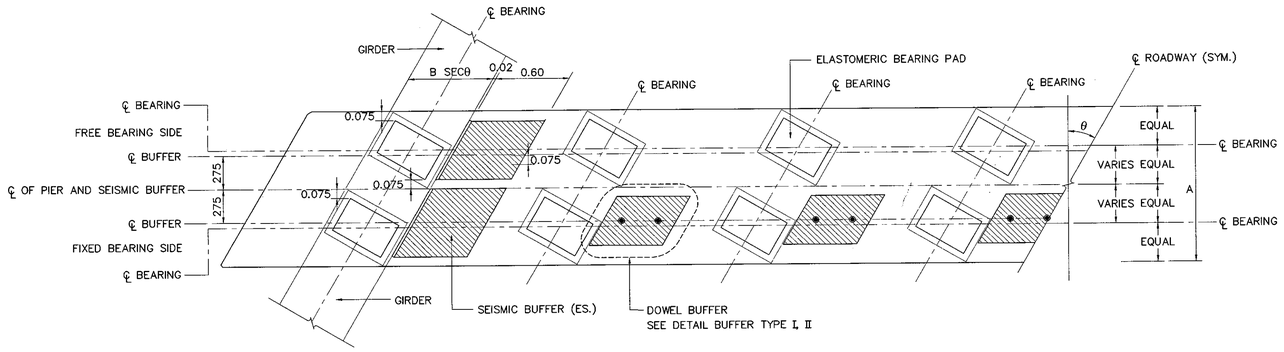

PLAN BUFFER AND BEARING PAD (CASE OF SKEWED BRIDGE)

SCALE 1 : 25

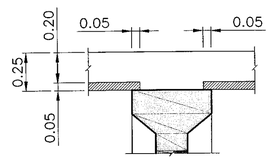

DETAIL "3"

SCALE 1 : 20

TABLE 1 : DETAIL OF BUFFER TYPE

BUFFER TYPE	THE MAX. GIRDER SPAN
I	20.00
II	30.00

NOTES:

1. ALL DIMENSIONS SHOWN ARE IN METERS UNLESS OTHERWISE INDICATED.

REF.	REVISION	SIGNATURE	DATE

KINGDOM OF THAILAND

MINISTRY OF TRANSPORT

DEPARTMENT OF HIGHWAYS

STANDARD DRAWING

ELASTOMERIC BEARING PAD

INSTALLATION OF ELASTOMERIC BEARING PAD AND BUFFER

FULL JOINT DETAILS

DESIGNED : D.O.H. & CONSULTANTS	CHECKED : BUREAU OF LOCATION & DESIGN	DATE : OCT 2015
SUBMITTED : (DIRECTOR OF LOCATION & DESIGN BUREAU)		SCALE : AS SHOWN
APPROVED : (FOR DIRECTOR GENERAL)		DWG NO. BP–101
		SHEET NO. 300

D:\std dwg 2015\BP-101(REV00)

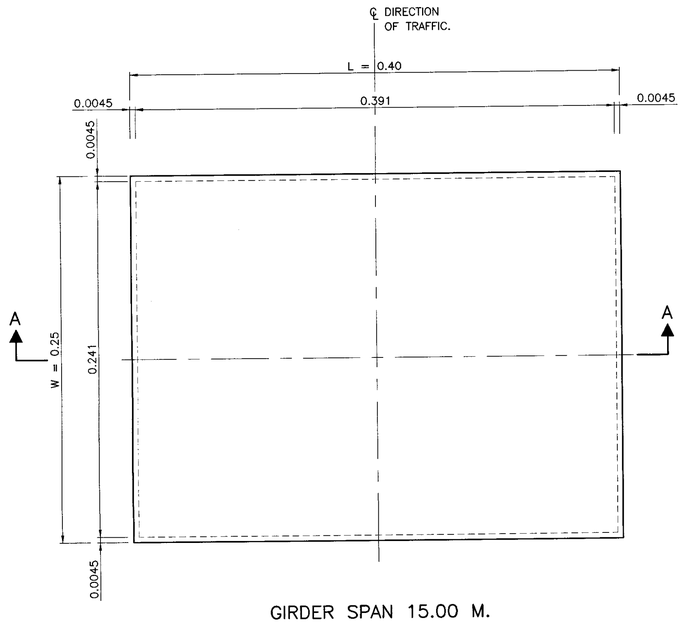

GIRDER SPAN 15.00 M.

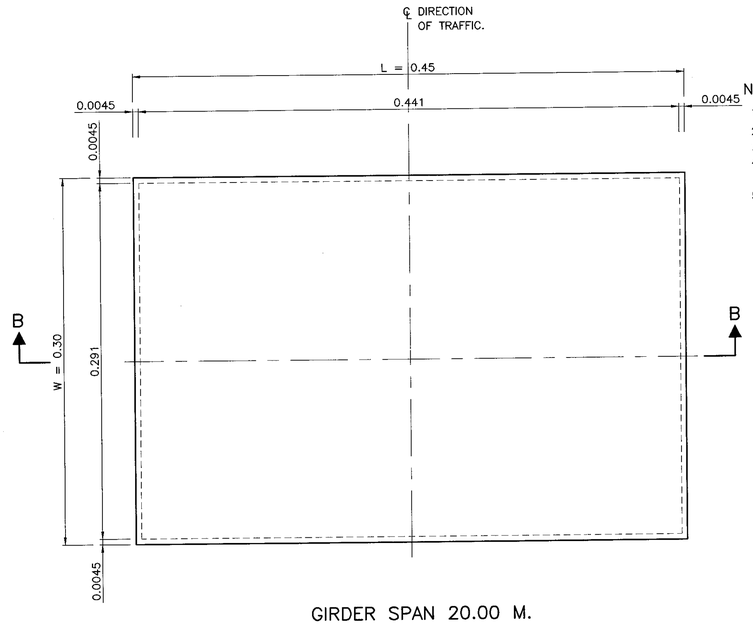

GIRDER SPAN 20.00 M.

BEARING PLANS
SCALE 1 : 25

NOTE :

1. ALL DIMENSIONS SHOWN ARE IN METERS UNLESS OTHERWISE INDICATED.
2. ALL BEARING MUST BE INSTALLED HORIZONTALLY.
3. ELASTOMERIC BEARING PAD SHALL BE USED FOR PC. I–GIRDER ONLY
4. DESIGN ELASTOMERIC NATURAL BEARING IN ACCORDING WITH AASHTO LRFD; SECTION 14.7, AASHTO LRFD BRIDGE CONSTRUCTION SPECIFICATIONS AND AASHTO MATERIALS SPECIFICATION M251
5. PROPERTIES OF ELASTOMERIC LAMINATED BEARING PAD SHALL BE:
   5.1 THE REQUIREMENT OF MECHANICAL PROPERTIES AS FOLLOWS :

MECHANICAL PROPERTIES	REQUIREMENT
1) HARDNESS, DETERMINED IN ACCORDANCE WITH ASTM D2240	60 ± 5 SHORE A Prs
2) TENSILE STRENGTH AND ULTIMATE ELONGATION, DETERMINED IN ACCORDANCE WITH ASTM D412 USING DUMB – BELL TEST PIECES : TENSILE STRENGTH, MINIMUM ELONGATION AT BREAK, MINIMUM	15.5 MPa ± 0.5% 400% ±10%
3) AGEING RESISTANCE, ACCELERATED AGEING IN AIR SHALL BE CONDUCTED IN ACCORDANCE WITH ASTM D573 AT SPECIFIED TEMP. FOR 3 DAYS AT 100 ±1C MAXIMUM CHANGE FROM INITIAL VALUE: HARDNESS TENSILE STRENGTH ULTIMATE ELONGATION	 10 SHORE A Pts 25% 25%
4) COMPRESSION SET MAXIMUM, DETERMINED IN ACCORDANCE WITH ASTM D395 METHOD B AT SPECIFIED TEMP. 70 ±1°C	25% (AFTER 22 HOURS)
5) OZONE RESISTANCE, DETERMINED IN ACCORDANCE WITH ASTM D1149 USING AN OZONE CONCENTRATION 100 pphm BY VOLUMN 20% STRAIN AT 37 ±1° C AND A DURATION OF 100 HOURS (MOUNTING PROCEDURE ASTM D518, METHOD A)	NO CRACKS
6) BONDING OF ELASTOMER, TEST IN ACCORDANCE WITH ASTM D429 METHOD B, MINIMUM	7 N/MM.

   5.2 STEEL LAMINATES USED FOR REINFORCEMENT SHALL BE:
   - CONFORMING TO AASHTO M270 GRADE 43A OR JIS G3101 GRADE SS–41 OR ASTM A36, A570 OR EQUIVALENT
   - MINIMUM YIELD STRESS 245 $N/MM.^2$
   - MINIMUM BREAKING STRENGTH 410–520 $N/MM.^2$
   - ELONGATION, MINIMUM 21%

   5.3 ELASTOMERIC BEARING PAD SHALL BE TESTED:
   - QUICK PRODUCTION TEST : ALL BEARINGS
   - COMPRESSION STIFFNESS TEST : ALL TYPES OF BEARING, ±20% OF COMPRESSIVE STIFFNESS DESIGN IN TABLE 1
   - SHEAR STIFFNESS TEST : ALL TYPES OF BEARING, ±20% OF SHEAR STIFFNESS DESIGN IN TABLE 1 OR SHEAR MODULUS TEST: ALL TYPES OF BEARING, 0.80 ±10% MPa
6. APPROVED TESTING LABORATORY SHALL BE DEPARTMENT OF SCIENCE SERVICE (DSS), THAILAND INSTITUTE OF SCIENCIFIC AND TECHNOLOGICAL RESEARCH (TISTR) OR OTHER LABORATORIES APPROVED BY DOH. WITHIN 6 MONTHS AFTER SIGNING A CONTRACT
7. CERTIFICATE OF ELASTOMERIC BEARING PAD SHALL BE SUBMITTED AND ACCEPTED
8. IN CASE OF DIFFERENT SIZE OF BEARING PAD, THE CONTRACTOR SHALL DESIGN BY FOLLOWING AASHTO LRFD STANDARD AND SUBMITTED TO DOH. FOR APPROVAL THE LOADS AND MOVEMENT PROPERTIES AS TABLE 1 (THE DIMENSION AND DEPTH OF DESIGNED BEARING SHALL NOT BE LESS THAN SPECIFIED IN TABLE 1)
9. EPOXY MOTAR FOR LEVELING OVER THE BEARING AND EPOXY MOTAR OR NON–SHRINK GROUTING MATERIAL FOR LEVELING UNDER THE BEARING SHALL BE ADJUSTED BY SUING EPOXY MOTAR OR NON–SHRINK GROUTING MATERIAL (STANDARD CUBE STRENGTH NOT LESS THAN 45 MPa AT 24 HOURS AFTER CASTING)
10. NO ROTATION INSTALLATION OF BEARING RESISTING UNIFORM LOAD

TABLE 1 LOADS & MOVEMENT OF BEARING (GUIDELINE ONLY)

GIRDER SPAN (M.)	BEARING TYPE	VERTICAL LOADS (KN.)		HORIZ. MOVEMENT (MM.)			HORIZ. LOAD (KN.)		ROTATION: (RAD.)	STIFFNESS (KN./MM.)	
				LONGITUDINAL		TRANS.					
		MAX.	MIN.	REVERSIBLE	IRREVERSIBLE		LONG.	TRANS.		COMPRESSIVE	SHEAR
15.00	FX.	500	200			±2	20	10	0.009	1,167	4,500
	FR.			±4	−10	±2		10		707	3,000
20.00	FX.	650	300			±2	20	10	0.009	1,167	4,500
	FR.			±4	−10	±2		10		707	3,000

NOTATION

+ IS EXPANSION
− IS CONTRACTION

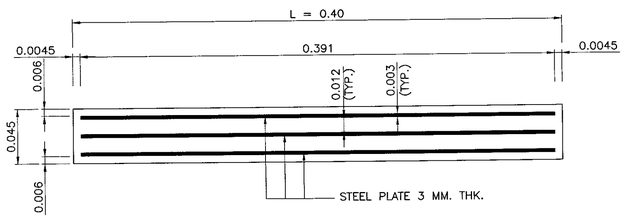

SECTION A – A BEARING TYPE "FX"
SCALE 1 : 25

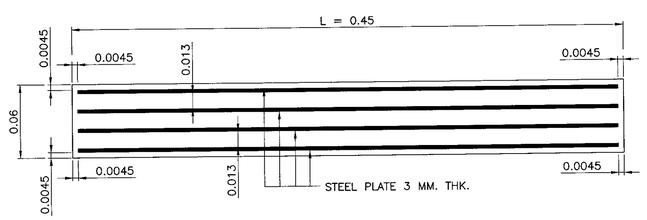

SECTION B – B BEARING TYPE "FX"
SCALE 1 : 25

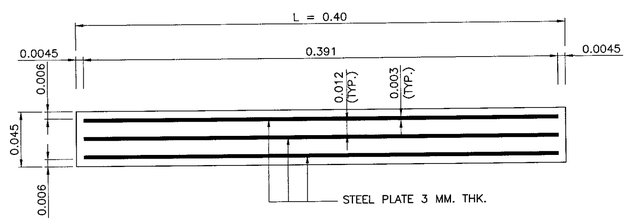

SECTION A – A BEARING TYPE "FR"
SCALE 1 : 25

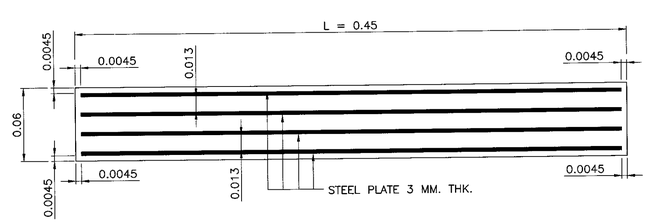

SECTION B – B BEARING TYPE "FR"
SCALE 1 : 25

KINGDOM OF THAILAND

MINISTRY OF TRANSPORT
DEPARTMENT OF HIGHWAYS

STANDARD DRAWING
ELASTOMERIC BEARING PAD
NATURAL RUBBER SPECIFICATIONS

DESIGNED : D.O.H. & CONSULTANTS	CHECKED : BUREAU OF LOCATION & DESIGN		DATE : OCT 2015
SUBMITTED : (DIRECTOR OF LOCATION & DESIGN BUREAU)			SCALE : AS SHOWN
APPROVED : (FOR DIRECTOR GENERAL)			DWG NO. BP–102
			SHEET NO. 301

REF.	REVISION	SIGNATURE	DATE

D:\std dwg 2015\BP-102(REV00)

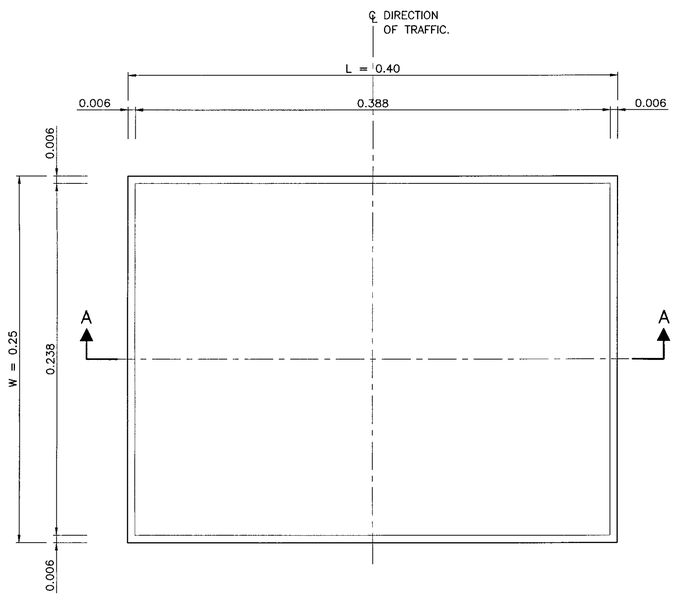

GIRDER SPAN 15.00 M.

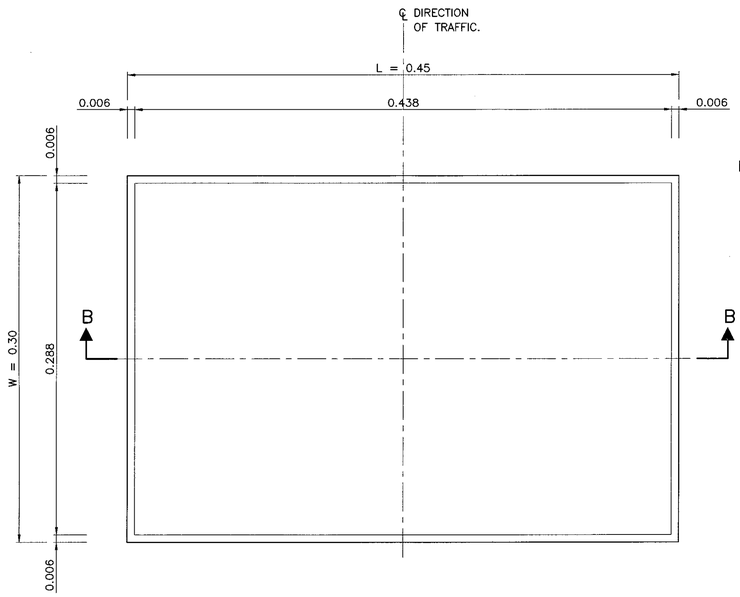

GIRDER SPAN 20.00 M.

BEARING PLANS
SCALE 1 : 25

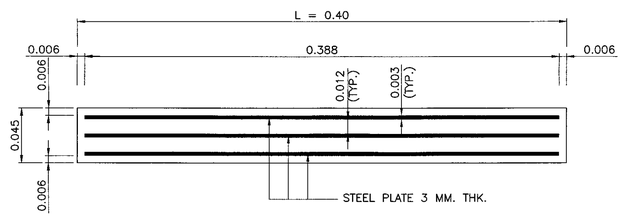

SECTION A – A BEARING TYPE "FX"
SCALE 1 : 25

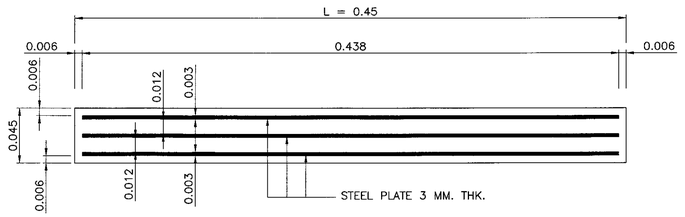

SECTION B – B BEARING TYPE "FX"
SCALE 1 : 25

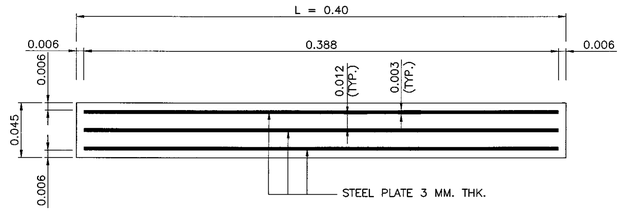

SECTION A – A BEARING TYPE "FR"
SCALE 1 : 25

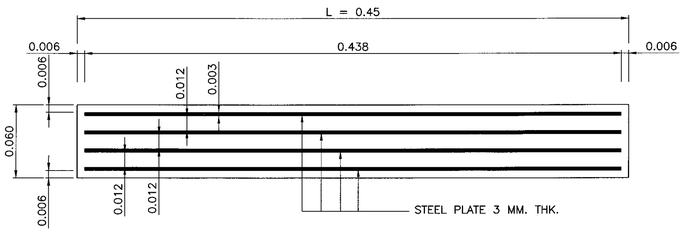

SECTION B – B BEARING TYPE "FR"
SCALE 1 : 25

NOTE :

1. ALL DIMENSIONS SHOWN ARE IN METERS UNLESS OTHERWISE INDICATED.
2. ALL BEARING MUST BE INSTALLED HORIZONTALLY.
3. ELASTOMERIC BEARING PAD SHALL BE USED FOR PC. I–GIRDER ONLY
4. DESIGN ELASTOMERIC BEARING IN ACCORDING WITH AASHTO LRFD; SECTION 14.7, AASHTO LRFD BRIDGE CONSTRUCTION SPECIFICATIONS AND AASHTO MATERIALS SPECIFICATION M251
5. PROPERTIES OF ELASTOMERIC LAMINATED BEARING PAD SHALL BE:
   5.1 THE REQUIREMENT OF MECHANICAL PROPERTIES AS FOLLOWS :

MECHANICAL PROPERTIES		REQUIREMENT
1) HARDNESS, DETERMINED IN ACCORDANCE WITH ASTM D2240		60 ± 5 SHORE A Prs
2) TENSILE STRENGTH AND ULTIMATE ELONGATION, DETERMINED IN ACCORDANCE WITH ASTM D412		
USING DUMB – BELL TEST PIECES :	TENSILE STRENGTH, MINIMUM	15.5 MPa ± 0.5%
	ELONGATION AT BREAK, MINIMUM	350% ±10%
3) AGEING RESISTANCE, ACCELERATED AGEING IN AIR SHALL BE CONDUCTED IN ACCORDANCE WITH ASTM D573 AT SPECIFIED TEMP. FOR 3 DAYS AT 100 ±1C°		
MAXIMUM CHANGE FROM INITIAL VALUE:	HARDNESS	15 SHORE A Pts
	TENSILE STRENGTH	15%
	ULTIMATE ELONGATION	40%
4) COMPRESSION SET MAXIMUM, DETERMINED IN ACCORDANCE WITH ASTM D395 METHOD B AT SPECIFIED TEMP. 100 ± 1°C		35% (AFTER 22 HOURS)
5) OZONE RESISTANCE, DETERMINED IN ACCORDANCE WITH ASTM D1149 USING AN OZONE CONCENTRATION 100 pphm BY VOLUMN 20% STRAIN AT 37 ±1° C AND A DURATION OF 100 HOURS (MOUNTING PROCEDURE ASTM D518, METHOD A)		NO CRACKS
6) BONDING OF ELASTOMER, TEST IN ACCORDANCE WITH ASTM D429 METHOD B, MINIMUM		7 N/MM.

   5.2 STEEL LAMINATES USED FOR REINFORCEMENT SHALL BE:
   - CONFORMING TO AASHTO M270 GRADE 43A OR JIS G3101 GRADE SS–41 OR ASTM A36, A570 OR EQUIVALENT
   - MINIMUM YIELD STRESS 245 $N/MM.^2$
   - MINIMUM BREAKING STRENGTH 410–520 $N/MM.^2$
   - ELONGATION, MINIMUM 21%

   5.3 ELASTOMERIC BEARING PAD SHALL BE TESTED:
   - QUICK PRODUCTION TEST : ALL BEARINGS
   - COMPRESSION STIFFNESS TEST : ALL TYPES OF BEARING, ±20% OF COMPRESSIVE STIFFNESS DESIGN IN TABLE 1
   - SHEAR STIFFNESS TEST : ALL TYPES OF BEARING, ±20% OF SHEAR STIFFNESS DESIGN IN TABLE 1 OR SHEAR MODULUS TEST: ALL TYPES OF BEARING, 0.80 ±10% MPa
6. APPROVED TESTING LABORATORY SHALL BE DEPARTMENT OF SCIENCE SERVICE (DSS), THAILAND INSTITUTE OF SCIENCIFIC AND TECHNOLOGICAL RESEARCH (TISTR) OR OTHER LABORATORIES APPROVED BY DOH. WITHIN 6 MONTHS AFTER SIGNING A CONTRACT
7. CERTIFICATE OF ELASTOMERIC BEARING PAD SHALL BE SUBMITTED AND ACCEPTED
8. IN CASE OF DIFFERENT SIZE OF BEARING PAD, THE CONTRACTOR SHALL DESIGN BY FOLLOWING AASHTO LRFD STANDARD AND SUBMITTED TO DOH. FOR APPROVAL THE LOADS AND MOVEMENT PROPERTIES AS TABLE 1 (THE DIMENSION AND DEPTH OF DESIGNED BEARING SHALL NOT BE LESS THAN SPECIFIED IN TABLE 1)
9. EPOXY MOTAR FOR LEVELING OVER THE BEARING AND EPOXY MOTAR OR NON–SHRINK GROUTING MATERIAL FOR LEVELING UNDER THE BEARING SHALL BE ADJUSTED BY SUING EPOXY MOTAR OR NON–SHRINK GROUTING MATERIAL (STANDARD CUBE STRENGTH NOT LESS THAN 45 MPa AT 24 HOURS AFTER CASTING)
10. NO ROTATION INSTALLATION OF BEARING RESISTING UNIFORM LOAD

TABLE 1 LOADS & MOVEMENT OF BEARING

GIRDER SPAN (M.)	BEARING TYPE	VERTICAL LOADS (KN.)		HORIZ. MOVEMENT (MM.)			HORIZ. LOAD (KN.)		ROTATION: (RAD.)	STIFFNESS (KN./MM.)	
				LONGITUDINAL		TRANS.					
		MAX.	MIN.	REVERSIBLE	IRREVERSIBLE		LONG.	TRANS.		COMPRESSIVE	SHEAR
15.00	FX.	500	200			±2	20	10	0.009	1,167	4,500
	FR.			±4	–10	±2		10		707	3,000
20.00	FX.	650	300			±2	20	10	0.009	1,167	4,500
	FR.			±4	–10	±2		10		707	3,000

NOTATION

+ IS EXPANSION
– IS CONTRACTION

REF.	REVISION	SIGNATURE	DATE

KINGDOM OF THAILAND
MINISTRY OF TRANSPORT
DEPARTMENT OF HIGHWAYS

STANDARD DRAWING
ELASTOMERIC BEARING PAD
CHLOROPRENE(NEOPRENE) RUBBER SPECIFICATIONS

DESIGNED : D.O.H. & CONSULTANTS	CHECKED : BUREAU OF LOCATION & DESIGN	DATE : OCT 2015
SUBMITTED : (DIRECTOR OF LOCATION & DESIGN BUREAU)		SCALE : AS SHOWN
APPROVED : (FOR DIRECTOR GENERAL)		DWG NO. BP–103
		SHEET NO. 302

D:\std dwg 2015\(BP-103(REV00)

EXPANSION JOINT SPECIFICATIONS

1. THE USE OF EXPANSION JOINT SHALL MEET THE REQUIREMENTS AS FOLLOWING TABLE :

TYPE OF EXPANSION JOINT	MAXIMUM GAP (MM.)	PROPERTIES OF MOVEMENT	REMARK
COMPRESION SEAL	< 40	SMALL MOVEMENT	FOR CONCRETE SURFACE
STRIP SEAL	40–70	MEDIUM MOVEMENT	
MODULAR JOINT	>70	LARGE MOVEMENT	⩽70 MM./GROOVE
FINGER JOINT OR TEETH JOINT	>70	LARGE MOVEMENT	

2. EXPANSION JOINT FOR SMALL MOVEMENT SPECIFICATIONS :

2.1 INSTALL BRIDGE EXPANSION JOINT TOGETHER WITH CONSTRUCT SLAB BRIDGE

2.2 DEFORM BAR SHALL BE TIS24 GRADE SD40 PEFORMED BARS OTHER BARS SHALL BE TIS20 GRADE SR24 PLAIN BARS UNLESS OTHERWISE INDECATED

2.3 RUBBER TUBE SHALL BE CHLOROPRENE RUBBER (R) AND MEET CONDITION AS FOLLOWS :

PHYSICAL PROPERTIES	REQUIRED	TEST METHOD
TENSILE STRENGTH (MPa.)	13.8	ASTM D412
ELONGATION AT BREAK, MM.%	250	ASTM D412
HARDNESS, TYPE A DUROMETER, CHANGE	55±5	ASTM D22402
OVER AGING AT 212'F FOR 70 HRS. – CHANGE IN TENSILE STRENGTH, MAX.% – CHANGE IN ELONGATION AT BREAK, MAX.% – CHANGE IN DUROMETER HARDNESS, POINT	 20 20 0 TO +10	ASTM D573
OIL SWELL ASTM OIL #3 AT 212'F FOR 70 HRS. – CHANGE BY WEIGHT, MAX.%	 45	ASTM D471
OZONE RESISTANCE 20% STRAIN, 300 PPHM N AIR AT 104'F FOR 70 HRS.	NO CRACK	ASTM D1149

2.4 RUBBER TUBE SHALL BE CONTINUOUS MEMBER LENGTH

2.5 WELDING STANDARD SHALL CONFORM TO AISC OR AWS OR EQUIVALENT

2.6 ANCHOR BAR AND STEEL PLATE AFTER FABRICATED SHALL BE NOT DRIP GALVANIZED WITH THE THICKNESS OF NOT LESS THAN 378 GRAMS/SQ.M. (1–25 OUNCES/SQ.FT.) AND SHALL BE SAMPLING FOR TESTING AS FOLLOWS

PRODUCTION QUANITITY	NO.OF SAMPLING
500	2
501 – 820	3
821 – 1,200	4
1,201 – 1,600	5
1,601 – 2000	6

2.7 LUBRICANT/ADHESIVE SHALL CONFORM TO ASTM D–4070

2.8 ALLOW STEEL PLATE TO BE BREAKED AT HALF OF SPAN LENGTH

2.9 THE CONTRACTOR SHALL PROVIDE BLOCK OUT FOR THE EXPANSION JOINT IN ACCORDANCE WITH THE MANUFACTURER'S INSTRUCTION. THE BLOCK OUT SURFACE SHALL BE ROUGHENED, CLEANED AND COATED WITH EPOXY RESIN BEFORE PLACING OF THE NON–SHRINK CONCRETE

2.10 NOTE FOR ASPHALT SURFACE

2.10.1 GROOVE PAVED ASPHALT SURFACE BEFORE 24 HOURS AND SEAL WITH MASTIC JOINT FILLER

2.10.2 MASTIC JOINT FILLER SHALL BE TIS479 OR EQUIVALENT

2.10.3 ALL DIAMENSIONS ARE MILLIMETER UNLESS OTHERWISE INDICATED

3. EXPANSION JOINT FOR MEDIUM AND LARGE MOVEMENT SPECIFICATIONS :

3.1 THE CONTRACTOR SHALL PROVIDE BLOCK OUT FOR THE EXPANSION JOINT IN ACCORDANCE WITH THE MANUFACTURER'S INSTRUCTION

3.2 THE BLOCK OUT SURFACE SHALL BE ROUGHENED, CLEANED AND COATED WITH EPOXY RESIN BEFORE PLACING OF THE NON–SHRINK CONCRETE

3.3 THE EPOXY RESIN SHALL BE IN ACCORDANCE WITH ASTM C881 TYPE I GRADE 2 OR EQUIVALENT

3.4 MAIN ELEMENTS WHICH ARE METAL COMPONENT SHALL HAVE PROPERTIES AS FOLLOW

3.4.1 THE WEATHERING STEEL SHALL BE CONFORMED TO ASTM A588 OR EQUIVALENT

3.4.2 THE ALLUMINUM ALLOY SHALL BE CONFORMED TO ASTM 6061 OR 6063 OR EQUIVALENT

PRODUCTION QUANITITY	NO.OF SAMPLING
3	ALL
4 – 500	3
501 – 1200	5
1201 – 3200	8
3201 – 10000	13
<10000	20

3.5 UNLESS OTHERWISE SPECIFIED ON THE DRAWING, THE NEOPRENE OR CHLOROPRENE RUBBER (CR) OR ETHYLENE PROPYLENE DIENE TERPOLYMER (EPDM) SHALL HAVE THE FOLLOWING PROPERTIES :

PHYSICAL PROPERTIES	REQUIRED		TEST METHOD
	CR	EPDM	
TENSILE STRENGH, MIN. (MPa.)	13.8	9	ASTM D412
ELONGATION AT BREAK, MIN.%	250	250	ASTM D412
HARDNESS, TYPE A DUROMETER, POINTS CHANGE	55±5	55 TO 75	ASTM D2240
OVEN AGING AT 212'F FOR 70 hrs.			ASTM D573
CHANGE IN TENSILE STREGH, MAX.%	20	20	
CHANGE IN ELONGATION AT BREAK MAX.%	20	20	
CHANGE IN DUROMETER HARDNESS, POINT	0 TO +10	0 TO +10	
OIL SWELL ASTM OIL #3 AT 212'F FOR 70 HRS. – CHANGE BY WEIGHT MAX.%	45	NO TEST	ASTM D471
OZONE RESISTANCE 20% STRAIN, 300 PPHM. IN AIR, AT 104° F FOR 70 HRS.	NO CRACK	NO CRACK	ASTM D1149

4. THE SAMPLE SHALL BE TESTED BY THE DEPARTMENT OF SCIENCE SERVICE (DSS) OR THAILAND INSTITUTE OF SCIENTIFIC AND TECHNOLOGY RESEARCH (TISTR) LOCATED AT BANG POO INDUSTRIAL ESTATE OR OTHER AGENCIES THAT DEPARTMENT OF HIGHWAYS HAS CERTIFIED. THE TEST SHALL BE COMPLETED WITHIN 6 MONTHS AFTER THE CONTRACT SIGNED.

5. THE NEOPRENE SHALL BE CONTINUOUS ALL THE JOINT. THE SHAPE OF NEOPRENE IS DEPEND ON MANUFACTURER'S STANDARD. THE FINGER OR TEETH JOINT SHALL NOT PERFORM AS GUTTER ON DECK.

6. THE CONTRACTOR HAVE TO PROPOSE THE METHOD TO FIX THE NEOPRENE WITH METAL COMPONENT FOR APPROVAL. THE CONNECTION SHALL BE WATERTIGHT AND CAN PROTECT ANY DEBRIS TO FALL INSIDE THE EXPANSION JOINT. HOWEVER, THE NEOPRENE SHALL BE UNCOMPLICATED TO CHAGE WITHOUT REMOVAL OF ANY METAL COMPONENTS.

7. FABRICATED, FIXING AND FURNISHING SYSTEM SHALL BE DONE IN ACCORDANCE WITH THE MANUFACTURER'S SPECIFICATION AND SHOWN ON THE APPROVED DRAWING. ALL PROCESS OF INSTALLATION SHALL BE CONDUCTED BY THE SKILL WORKMANSHIP OF MANUFACTURER OR SUPPLIER.

8. THE BLOCK OUT IN DECK SLAB SHALL CONFORM TO THE MANUFACTURER'S INSTRUCTION. THE BLOCK OUT SHALL BE FILLED WITH NONSHRINK CONCRETE MIXED WITH APPROVED ADDITIVE. THE NONSHRINK CONCRETE SHALL NOT BE EXPANDED MORE THAN 5% AND THE COMPRESSIVE STRENGTH OF 0.15x0.15x0.15 M. STANDARD CUBE SHALL NOT LESS THAN 40 MPa. (41 KG/M^2) AT 28 DAYS.

9. THE PROPOSED EXPANSION JOINT SHALL HAVE BEEN USED IN THAILAND OR ABROAD NOT LESS THAN 10 YEARS.

10. THE CONTRACTOR AND MANUFACTURER OR SUPPLIER SHALL GUARANTEE THE EXPANSION JOINT SYSTEM NOT LESS THAN 10 YEARS. ALL COMPONENTS AND FIXING SYSTEM SHALL BE IN PROPERLY CONDITION. ANY DEFECTS OCCUR DURING GUARANTEE PERIOD SHALL BE REPAIRED OR CHANGE THE NEW ONE WITHOUT NO COST CHARGE TO DEPARTMENT OF HIGHWAY.

11. WITHIN 120 DAYS FROM CONTRACT SIGNING DATE, THE CONTRACTOR SHALL SUBMIT THE DESCRIPTION, DETAILED DRAWINGS, CALCULATION SHEET, INSTALLATION METHOD AND ALL REQUIRES DOCUMENTS CONCERNING TO THE EXPANSION JOINT TO THE BUREAU OF LOCATION AND DESIGN. THE CONTRACTOR SHALL SUBMIT THE SAMPLES TO APPROVED AGENCIES FOR TESTING NOT LATER THAN 180 DAYS BEFORE THE END OF CONTRACT.

12. IN CASE MODULAR JOINT OR TEETH JOINT OR FINGER JOINT IS PROPOSED TO UTILIZE, THE CONTRACTOR SHALL SUBMITTED ADDITIONAL DOCUMENTS AND STRICTLY PERFORM AS FOLLOWING:

12.1 THE CONTRACTOR SHALL SUBMIT THE RESULTS OF FATIGUE TEST, FATIGUE DESIGN AND CHEMICAL PROPERTIES OF MAIN ELEMENT. THE TEST SHALL BE CONDUCT NOT MORE THAN 3 YEARS AND THE MANUFACTURER SHALL CERTIFIED THE RESULT.

12.2 THE CONTRACTOR SHALL CARRY OUT THE CHEMICAL TEST OF SAMPLES TAKEN FROM MAIN ELEMENT. THE TEST SHALL BE CONDUCTED BY APPROVED AGENCIES IN THAILAND.

13. ALL DIMENSIONS SHOWN ARE IN METERS UNLESS OTHERWISE INDICATED.

REF.	REVISION	SIGNATURE	DATE

KINGDOM OF THAILAND

MINISTRY OF TRANSPORT

DEPARTMENT OF HIGHWAYS

STANDARD DRAWING

EXPANSION JOINT

SPECIFICATIONS

DESIGNED : D.O.H. & CONSULTANTS	CHECKED : BUREAU OF LOCATION & DESIGN	DATE : OCT 2015
SUBMITTED : (DIRECTOR OF LOCATION & DESIGN BUREAU)		SCALE : AS SHOWN
APPROVED : (FOR DIRECTOR GENERAL)		DWG NO. EJ–101
		SHEET NO. 303

D:\std dwg 2015\EJ-101(REV00)

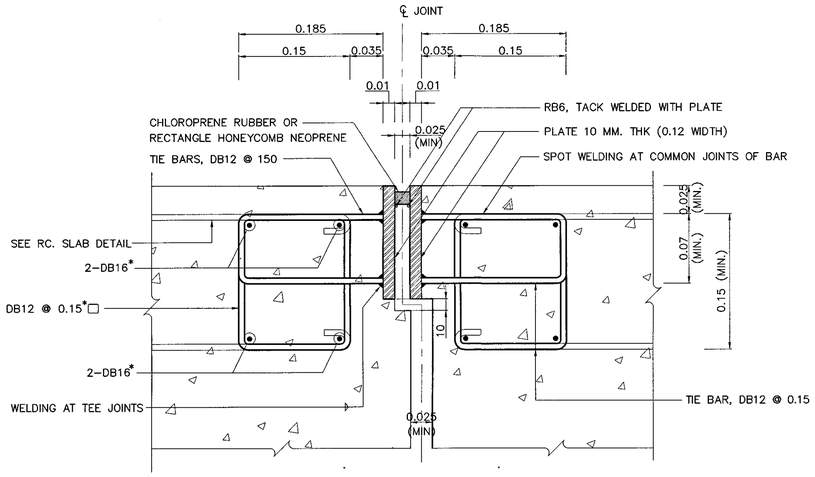

(MAXIMUM GAP 40 MM.)

TYPICAL SECTION OF COMPRESSION SEAL

NOT TO SCALE

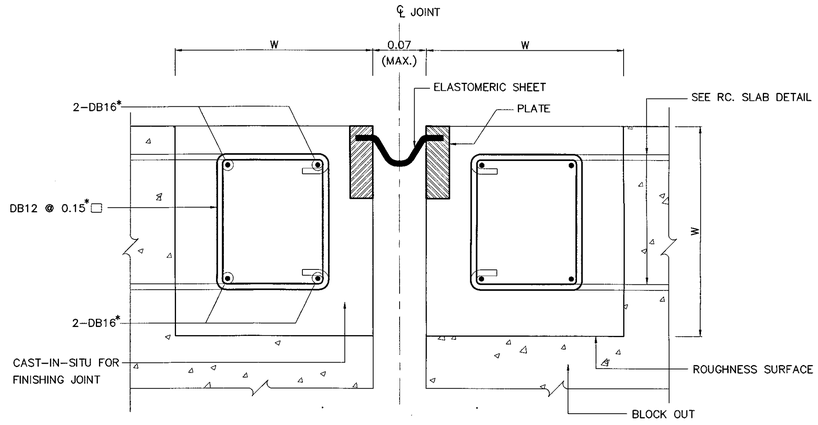

(GAP 40 – 70 MM.)

TYPICAL SECTION OF STRIP SEAL

NOT TO SCALE

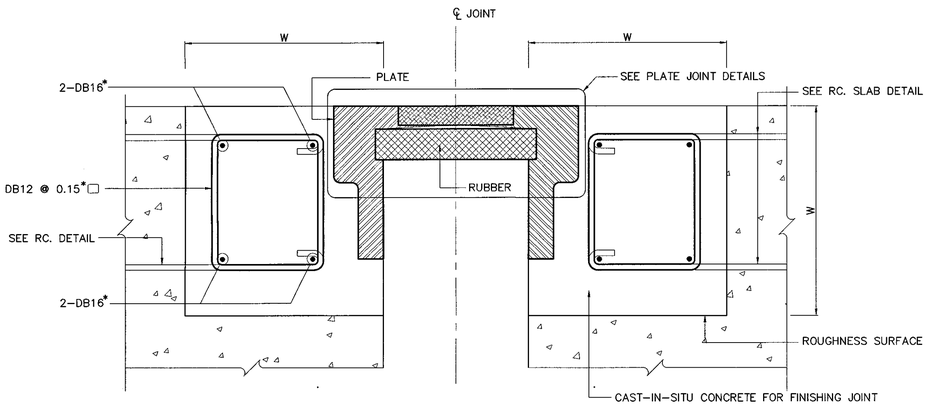

(GAP > 70 MM.)

TYPICAL SECTION OF TEETH AND FINGER JOINTS

NOT TO SCALE

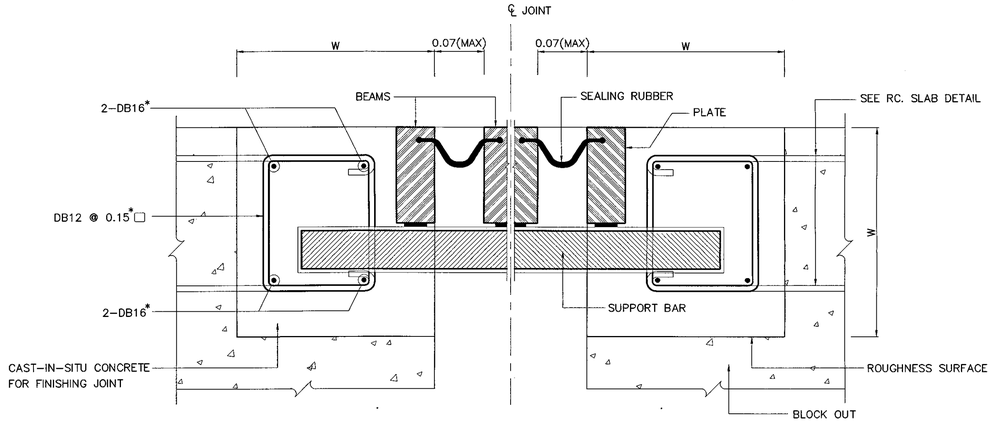

(MINIMUM GAP >70 MM. AND ≤70 MM./GROOVE)

TYPICAL SECTION OF MODULAR JOINT

NOT TO SCALE

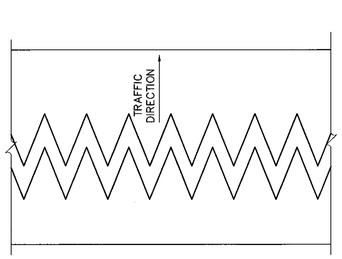

PLAN OF TEETH JOINT

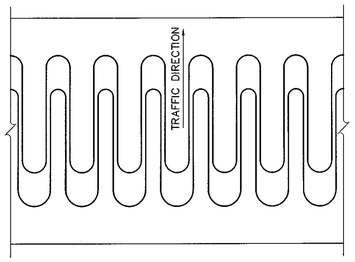

PLAN OF FINGER JOINT

PLATE JOINT DETAILS

NOT TO SCALE

NOTES :

1. ALL DIMENSIONS SHOWN ARE IN METERS UNLESS OTHERWISE INDICATED.
2. THE DIMENSIONS OF W AND EXTRA BAR (*) DEPEND ON BLOCK OUT REQUIREMENT AND SUPPLIER
3. ALL WELDING PROCESS AND CONNECTION DETAILS ARE PROVIDED BY SUPPLIER

KINGDOM OF THAILAND

MINISTRY OF TRANSPORT

DEPARTMENT OF HIGHWAYS

STANDARD DRAWING

EXPANSION JOINT
CONCRETE BRIDGE SURFACE

DESIGNED : D.O.H. & CONSULTANTS	**CHECKED :** BUREAU OF LOCATION & DESIGN		**DATE :** OCT 2015
SUBMITTED : (DIRECTOR OF LOCATION & DESIGN BUREAU)			**SCALE :** AS SHOWN
			DWG NO. EJ-102
APPROVED : (FOR DIRECTOR GENERAL)			**SHEET NO.** 304

REF.	REVISION	SIGNATURE	DATE

D:\std dwg 2015\EJ-102(REV00)

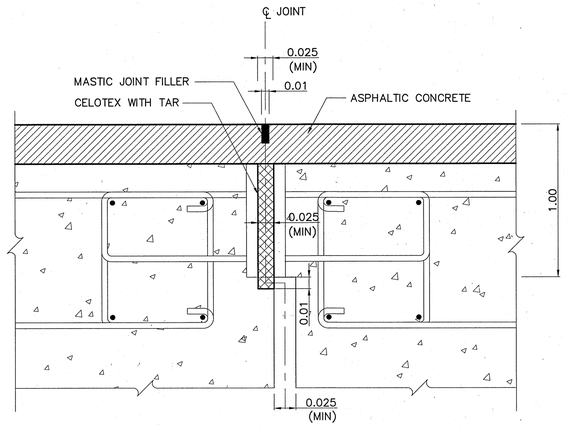

(MAXIMUM GAP 40 MM.)

TYPICAL SECTION OF SMALL MOVEMENT

NOT TO SCALE

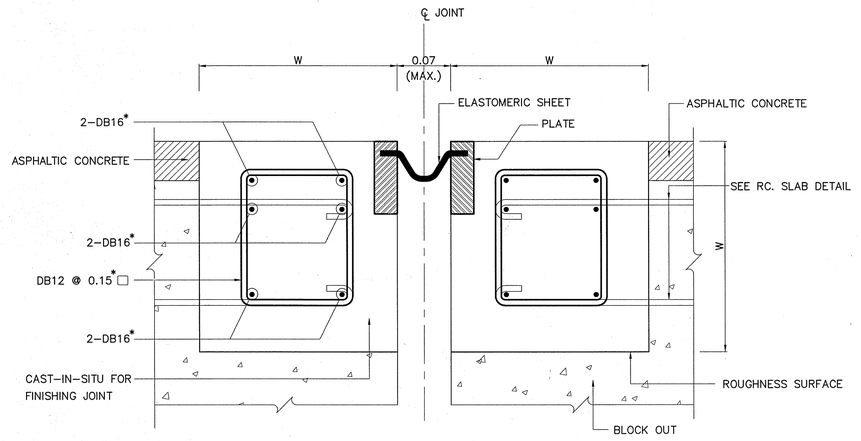

(GAP 40 – 70 MM.)

TYPICAL SECTION OF STRIP SEAL

NOT TO SCALE

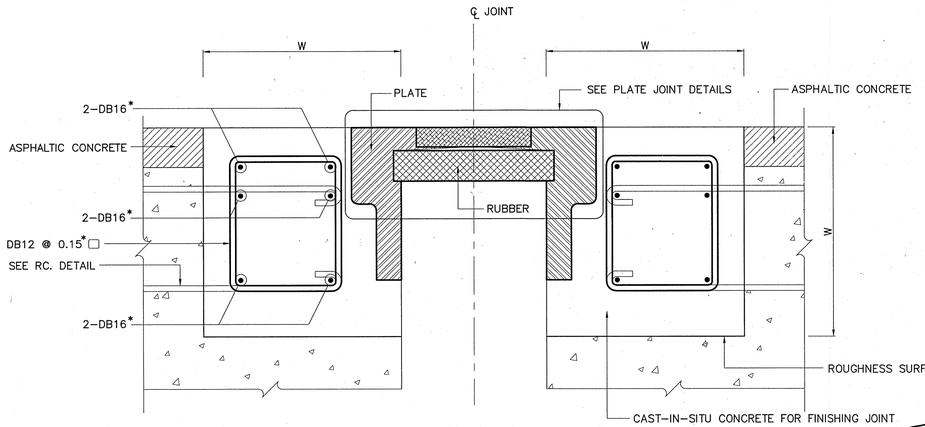

(GAP > 70 MM.)

TYPICAL SECTION OF TEETH AND FINGER JOINTS

NOT TO SCALE

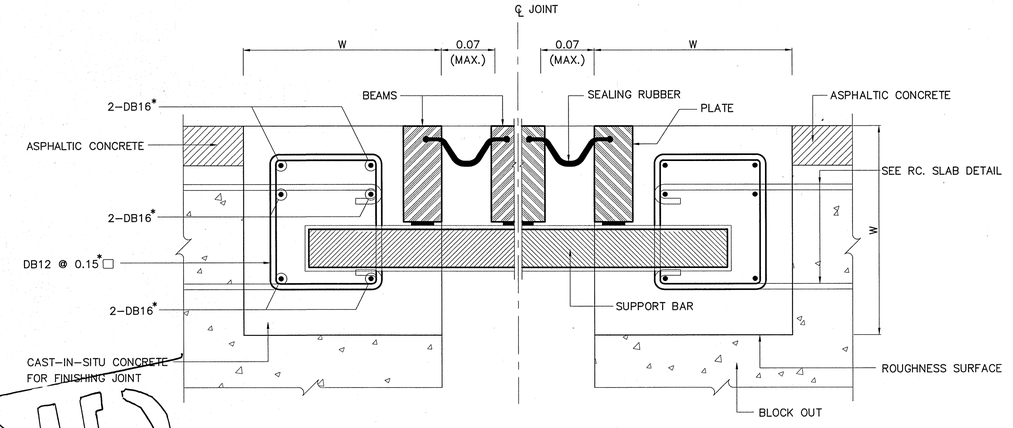

(MINIMUM GAP> 70 MM. AND ≤ 70 MM./GROOVE)

TYPICAL SECTION OF MODULAR JOINT

NOT TO SCALE

VOID

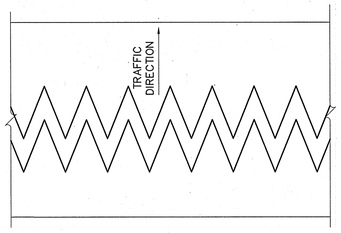

PLAN OF TEETH JOINT

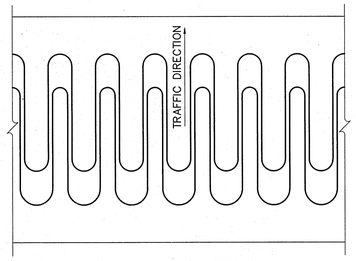

PLAN OF FINGER JOINT

PLATE JOINT DETAILS

NOT TO SCALE

NOTES :

1. ALL DIMENSIONS SHOWN ARE IN METERS UNLESS OTHERWISE INDICATED.
2. THE DIMENSIONS OF W AND EXTRA BAR (*) DEPEND ON BLOCK OUT REQUIREMENT AND SUPPLIER
3. ALL WELDING PROCESS AND CONNECTION DETAILS ARE PROVIDED BY SUPPLIER

REF.	REVISION	SIGNATURE	DATE

KINGDOM OF THAILAND

MINISTRY OF TRANSPORT

DEPARTMENT OF HIGHWAYS

STANDARD DRAWING

EXPANSION JOINT

ASPHALT BRIDGE SURFACE

DESIGNED : D.O.H. & CONSULTANTS	**CHECKED :** BUREAU OF LOCATION & DESIGN	**DATE :** OCT 2015
SUBMITTED : (DIRECTOR OF LOCATION & DESIGN BUREAU)		**SCALE :** AS SHOWN
		DWG NO. EJ–103
APPROVED : (FOR DIRECTOR GENERAL)		**SHEET NO.** 305

D:\std dwg 2015\EJ-103(REV00)

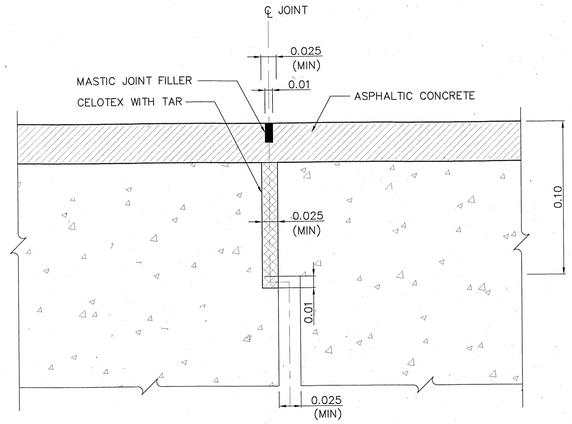

(MAXIMUM GAP 40 MM.)

TYPICAL SECTION OF SMALL MOVEMENT

NOT TO SCALE

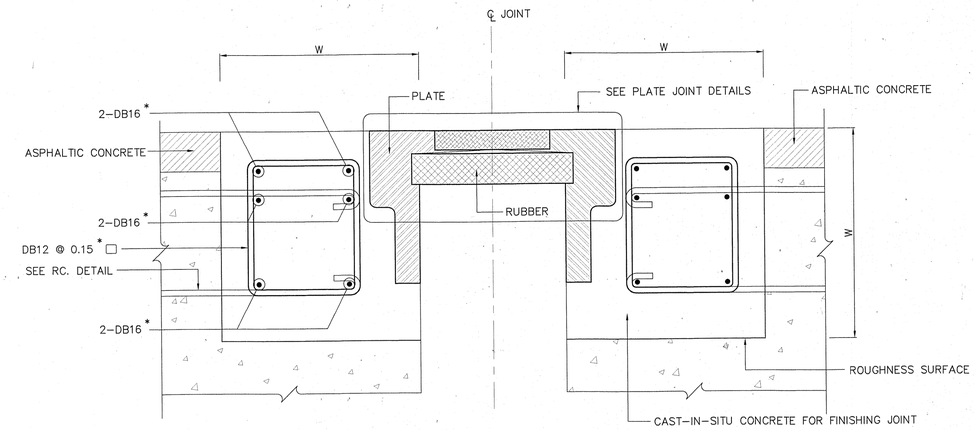

(GAP > 70 MM.)

TYPICAL SECTION OF TEETH AND FINGER JOINTS

NOT TO SCALE

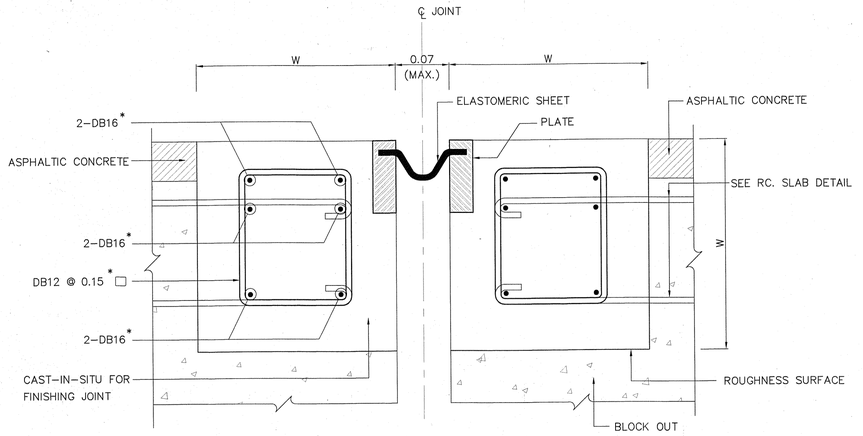

(GAP 40 – 70 MM.)

TYPICAL SECTION OF STRIP SEAL

NOT TO SCALE

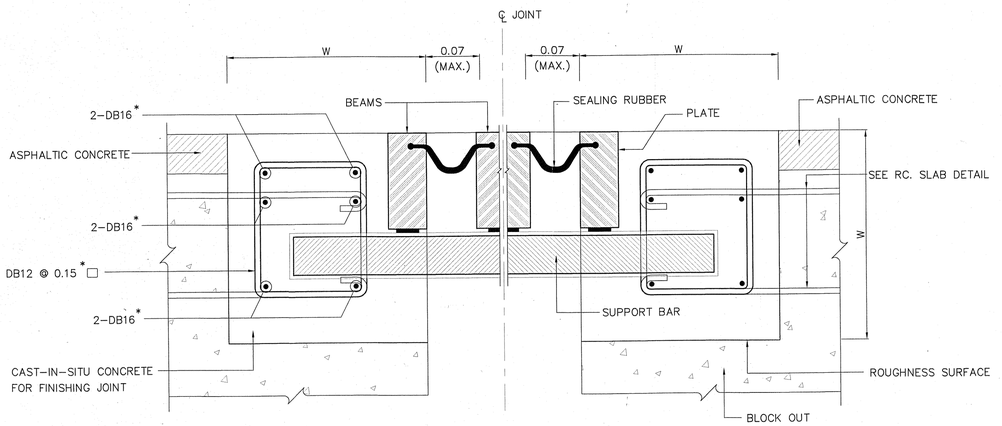

(MINIMUM GAP> 70 MM. AND ≤ 70 MM./GROOVE)

TYPICAL SECTION OF MODULAR JOINT

NOT TO SCALE

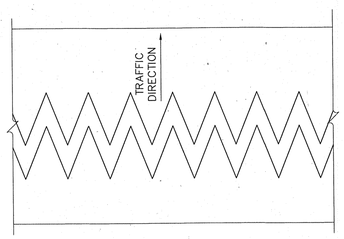

PLAN OF TEETH JOINT

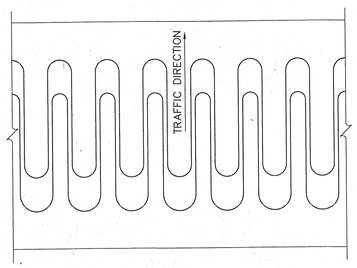

PLAN OF FINGER JOINT

PLATE JOINT DETAILS

NOT TO SCALE

NOTES :

1. ALL DIMENSIONS SHOWN ARE IN METERS UNLESS OTHERWISE INDICATED.
2. THE DIMENSIONS OF W AND EXTRA BAR (*) DEPEND ON BLOCK OUT REQUIREMENT AND SUPPLIER
3. ALL WELDING PROCESS AND CONNECTION DETAILS ARE PROVIDED BY SUPPLIER

REV.1	REVISION 2/2019		DEC 2019
REV.	REVISION	SIGNATURE	DATE

KINGDOM OF THAILAND

MINISTRY OF TRANSPORT

DEPARTMENT OF HIGHWAYS

STANDARD DRAWING

EXPANSION JOINT

ASPHALT BRIDGE SURFACE

DESIGNED : D.O.H. & CONSULTANTS	**CHECKED :** BUREAU OF LOCATION & DESIGN	**DATE :** OCT 2015
SUBMITTED : (DIRECTOR OF LOCATION & DESIGN BUREAU)		**SCALE :** AS SHOWN
		DWG NO. EJ–103
APPROVED : (FOR DIRECTOR GENERAL)		**SHEET NO.** 305/R1

D:\DOH\2-แบบมาตรฐาน กรมทางหลวง\1-STANDARD FINAL-1-CAD(ENG)_2015\6_แก้ไขครั้งที่ ๑\EJ-103(REV01)

DESIGN CRITERIA AND PILE SPECIFICATIONS

GENERAL

1. ALL DIMENSIONS SHOWN ARE IN METERS UNLESS OTHERWISE INDICATED.
2. THE MATERIAL COMPONENT SHALL BE EXAMINED FOR APPROVAL
3. ALL MATERIALS CONFORMED THAI INDUSTRIAL STANDARD (TIS.) SHALL BE MEET THE TIS. REQUIREMENT AND APPROVED UNLESS OTHERWISE INDICATED
4. THE PRINCIPAL TEST CERTIFICATE SHALL BE SUBMITTED BY RELIABLE INSTITUTION FOR APPROVED FROM BUREAU OF LOCATION AND DESIGN

CONCRETE

1. THE MINIMUM COMPRESSIVE STRENGTH OF CONCRETE FOR 15x15x15 CM. CUBE AT 28 DAYS SHALL BE SPECIFIED IN THE TABLE BELOW UNLESS OTHERWISE STATED
2. THE POZZOLAN PORTLAND CEMENT SHALL BE USED WHEN EXPOSED TO CHLORIDE OR SULPHATE ION CONFORMED TO DWG. NO. GN-001

PILE TYPES	CUBE STRENGTH AT 28 DAYS (MPa.)	SLUMP OF CONCRETE (MAX.) (CM.)	THE MAX. COARSE AGGREGATE (CM.)
R.C. DRIVEN PILE*	35 (357 KG/CM^2)	10	2.00
PRECAST DRIVEN PILE*	45 (459 KG/CM^2)	10	2.00
PRECAST SPUN PILE*	60 (612 KG/CM^2)	10	2.00
OTHERS*	35 (357 KG/CM^2)	10	2.54

* THE MINIMUM CEMENT CONTENT SHALL BE CONFORMED TO DWG. NO. GN-001

3. THE MIX DESIGN SHALL BE SUBMITTED FOR APPROVAL
4. WIRE (REBAR) OR ANY DEVICES FASTENING TO FORMWORK SHALL BE DESIGNED TO REMOVE OR CUT OUT. THE MINIMUM EMBEDED FASTENING DEPTH IS 4 CM. AND MORTAR CONCRETE SHALL BE GROUTED AFTERWARD. THE FINISHING SURFACE SHALL BE SMOOTH AND COLOR UNIFORMITY

REINFORCEMENT BAR

1. DIAMETER AND PROPERTY OF REINFORCEMENT BAR AS FOLLOWS :

REBAR DIAMETER	DIAMETER (MM.)	WEIGHT (KG./M.)	TIS.	QUALITY CLASS	SYMBOL
RB6	6	0.22	20	1	SR24
RB9	9	0.50	20	1	SR24
DB12	12	0.89	24	3	SD40
DB16	16	1.58	24	3	SD40
DB20	20	2.47	24	3	SD40
DB25	25	3.85	24	3	SD40
DB28	28	4.83	24	3	SD40

2. THE REINFORCEMENT SPLICED POSITION SHALL BE SPECIFIED IN THE DRAWING OTHERWISE SHALL BE REVIEWED BY THE ENGINEERING SUPERVISOR THE LAP LENGTH OF SPLICING IS NOT LESS THAN 40 AND 30 TIMES OF THE DIAMETER OF ROUND AND DEFORMED BARS, RESPECTIVELY.

PRESTRESSING STEEL

1. PRESTRESSING WIRES CONFORMED TO TIS.95 AND
   THE ULTIMATE TENSILE STRENGTH AND YIELD STRENGTH FOR WIRE ø5 MM. ARE 34.70 KN/STRAND AND 29.50 KN/STRAND (GRADE 1770 MPa), RESPECTIVELY
   THE ULTIMATE TENSILE STRENGTH AND YIELD STRENGTH FOR WIRE ø7 MM. ARE 64.30 KN/STRAND AND 54.70 KN/STRAND (GRADE 1670 MPa), RESPECTIVELY
2. PC. STRAND CONFORMED TO TIS.420 AND
   THE ULTIMATE TENSILE STRENGTH AND YIELD STRENGTH FOR STRAND ø9.5 MM. ARE 102.00 KN/STRAND AND 86.60 KN/STRAND (GRADE 1860 MPa), RESPECTIVELY
   THE ULTIMATE TENSILE STRENGTH AND YIELD STRENGTH FOR STRAND ø12.7 MM. ARE 183.60 KN/STRAND AND 156.00 KN/STRAND (GRADE 1860 MPa), RESPECTIVELY

MATERIAL USE FOR SPLICE JOINT, PILE SHOE AND PILE END

1. WELDING STANDARD IS ACCORDING TO AWS (AMERICAN WELDING SOCIETY)
2. CAST IRON PILE SHOE SHALL BE INSTALL FOR SHALES OR ROCK
3. STEEL PLATE SHALL BE CONFORMED TO TIS.1499 GRADE Fe25
4. THE ULTIMATE TENSILE STRENGTH (Fu) OF WELDING ELECTRODE SHALL BE AT LEAST 483 MPa
5. ANY TOP SIDE AT PILE END SHALL BE STAMPED "TOP", THE PRINTED TEXT SIZE 0.10 M. AND PAINT RED COLOR

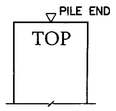

THE SPLICING JOINTS OF R.C. AND PC. PILES

1. PILE WELDING SHALL BE APPLIED IN ACCORDANCE WITH THE FOLLOWING CONDITIONS
   1.1 THE LENGTH OF SQUARE R.C. AND PC. PILES DIMENSION 40x40 CM. IS OVER 25.00 M. AND THE TOTAL LENGTH OF THE PILE SHALL BE LESS THAN 30.00 M.
   1.2 THE LENGTH OF SQUARE R.C. AND PC. PILES DIMENSION 52.5x52.5 CM. AND 65x65 CM. IS OVER 30.00 M.
2. ONLY 2 PILES HAVING DIFFERENT IN LENGTH 3.00 M. (MAX.) SHALL BE PERMITTED.
3. THE JOINT SHALL BE LOWER THAN THE PILE CUT OFF LEVEL AT LEAST 12 M. AND BELOW GROUNDWATER LEVEL AT LEAST 2 M.
4. WELD INSPECTION VERIFIED THE COMPLETENESS AND ACCURACY SHALL BE PROPOSED TO ENGINEER SUPERVISOR FOR APPROVAL BEFORE CARRIED OUT
5. PILE BENT STRUCTURE ARE NOT PERMITTED FOR SPLICING JOINTS OF PILES
6. IN CASE EXPOSED TO SALTWATER, BRACKISH OR SALINE SOIL AREAS FOR SPLICING JOINTS OF PILES MUST HAVE A SYSTEM CORROSION PROTECTION. THE PRESENT OWNER MUST BE APPROVAL BEFORE IMPLEMENTATION UNLESS OTHERWISE INDICATED.

ALLOWABLE LOAD CAPACITY OF PILES

THE ALLOWABLE LOAD CAPACITY OF PILES SHALL BE SHOWN IN THE FOLLOWING TABLES

R.C. AND PC. PILE DIMENSIONS (CM.xCM.)	ALLOWABLE	
	TON	KN.
40 X 40	50	490
52.5 X 52.5	80	785
65 X 65	125	1226

SPUN PILE DIAMETER ø (CM.)	LOAD CAPACITY	
	TON	KN.
50	70	687
60	100	981
80	150	1472
100	300	2943

DETERMINATION OF PILE LOAD CAPACITY

1. ULTIMATE LOAD CAPACITY OF DRIVEN PILE SHALL BE DETERMINED FROM HILEY'S FORMULA

HILEY'S FORMULA (F.S. = 2.5)

$$R=\frac{nWhE}{S+\frac{C}{2}}$$

R = ULTIMATE BEARING CAPACITY (TON)
n = EFFICIENCY FACTOR = $\frac{W+Pe^2}{W+P}$
W = WEIGHT OF HAMMER (TON)
P = WEIGHT OF PILE (TON)
e = COEFFICIENT OF PILE HEAD AND CUSHION.
= 0.25 COEFFICIENT OF RESTITUTION
h = HEIGHT OF DROP (CM.)
E = EQUIPMENT LOSS FACTOR = 0.75
S = SETTLEMENT HEIGHT OF LAST TEN BLOWS (CM.)
C = TEMPORARY COMPRESSION = $C_1+C_2+C_3$
C_1 = COMPRESSION IN PILE HEAD CUSHION (CM.)= $\frac{10}{A}\frac{5}{E_1}Rt$
C_2 = PILE SHORTENING FOR PILE LENGTH OF L (CM.) = $\frac{10}{A}\frac{5}{E_C}RL$
C_3 = COMPRESSION IN THE SOIL UNDERNEATH AND SURROUNDING THE PILE = 0.25 CM.
t = PILE CUSHION THICKNESS (M.)
L = PILE LENGTH (M.)
A = CROSS SECTIONAL AREA OF PILE (CM.^{2})
E_1 = MODULUS OF ELASTICITY PILE CUSHION THICKNESS (M.)
= 94,100 KSC. FOR SOFTWOOD CUSHION
= 112,300 KSC. FOR MEDIUM HARDWOOD CUSHION
= 136,300 KSC. FOR HARDWOOD CUSHION
E_C = MODULUS OF ELASTICITY FOR CONCRETE OF PILE
= 238,958 KSC. FOR R.C. DRIVEN PILE
= 284,366 KSC. FOR PRECAST DRIVEN PILE
= 339,882 KSC. FOR PRECAST SPUN PILE

- IF THE HILEY'S FORMULA IS NOT APPLICABLE IN VERY SOFT CLAY SITE, JANBU'S OR DANISH'S FORMULA SHALL BE APPLIED AND CONFORMED TO STATIC PILE LOAD TEST
- MODIFIED FORMULA HILEY'S FORMULA SHALL BE CONFIRMED WITH STATIC PILE LOAD TEST, THE MINIMUM HAMMER WEIGHT AS FOLLOWS :

PILE LENGTH (L)	W_{min}(MINIMUM HAMMER WEIGHT) (TON)
L < 15.00 M.	1 TIMES WEIGHT OF PILE
15.00 M. < L < 18.00 M.	$\frac{3}{4}$ TIMES WEIGHT OF PILE
L > 18.00 M.	$\frac{2}{3}$ TIMES WEIGHT OF PILE

THE SIZE SELECTION FOR HAMMER

1. THE MAXIMUM HAMMER WEIGHT (W_{max}) SHALL BE $0.0764\sqrt{\frac{A\ B}{h}}$ (TON.)
   BY
   A = CROSS SECTIONAL AREA OF PILE (CM.^{2})
   B = WIDTH OF PILE (CM.)
   h = HEIGHT OF DROP (CM.)
2. THE MINIMUM HAMMER WEIGH SHALL BE AT LEAST HALF WEIGHT OF THE PILE AND 3 TON.

DETERMINATION OF PILE LOAD CAPACITY BY STATIC LOAD TEST

1. NUMBER AND LOCATION OF TEST PILES SHALL BE AS SPECIFIED IN THE DRAWINGS.
2. METHOD OF PILE LOAD TEST SHALL BE ACCORDING TO DOH STANDARDS.
3. ULTIMATE LOAD USED IN THE LOAD TEST SHALL BE 2 TIMES OF ALLOWABLE LOAD (F.S. = 2.00).

NOTES :

1. OTHER DETAILS WERE NOT SPECIFIED ARE ACCORDING TO DWG. GN-001 TO GN-003.
2. FREE STANDING HEIGHT OF PILE SHALL NOT EXCEED 3.00 M.
   FOR OTHER SUITABLE FREE STANDING HEIGHT SHALL BE DESIGNED

REV.	REVISION	SIGNATURE	DATE
REV.1	REVISION 1/2017		JUN 2017

KINGDOM OF THAILAND
MINISTRY OF TRANSPORT
DEPARTMENT OF HIGHWAYS

STANDARD DRAWING

PILE SPECIFICATIONS

DESIGNED : D.O.H. & CONSULTANTS	CHECKED : BUREAU OF LOCATION & DESIGN	DATE : OCT 2015
SUBMITTED : (DIRECTOR OF LOCATION & DESIGN BUREAU)		SCALE : AS SHOWN
APPROVED : (FOR DIRECTOR GENERAL)		DWG NO. PL-001
		SHEET NO. 306/R1

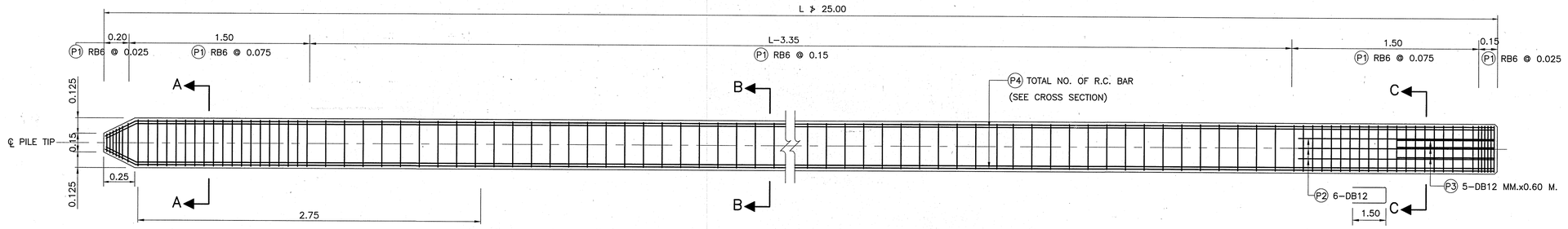

REINFORCEMENT DETAILS
SCALE 1 : 20

REINFORCEMENT SCHEDULE

BAR MARK	TYPE& SIZE(MM.)	SPACING (MM.)	SHAPE CODE	LENGTH (MM.)	
				a	b
P1	RB 6	25, 75, 150	A	300	300
P2	DB12	–	C	1500	288
P3	DB12	–	B	600	–
P4	DB25	–	B	LENGTH OF PILE	
P5	DB25	–	B	3000	–

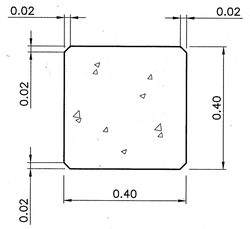

PILE SECTION
SCALE 1 : 10

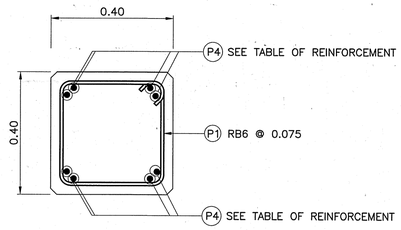

SECTION A – A
SCALE 1 : 10

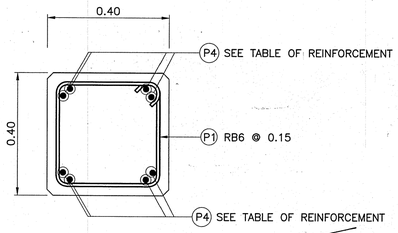

SECTION B – B
SCALE 1 : 10

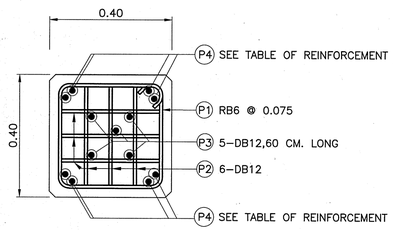

SECTION C – C
SCALE 1 : 10

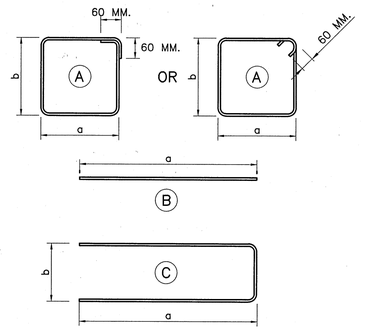

BAR SHAPE CODE

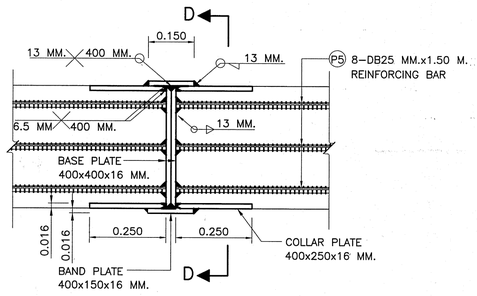

SPLICING JOINT DETAILS FOR TOTAL LENGHT > 25.00
SCALE 1 : 10

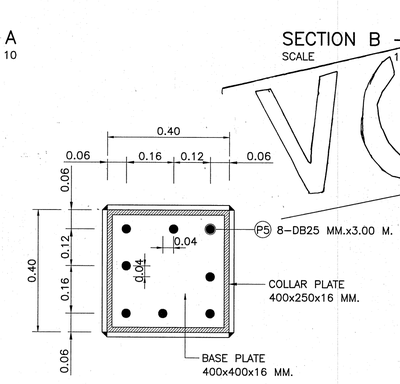

SECTION D – D
SCALE 1 : 10

TABLE "A" (AMOUNT REINFORCEMENT)

LENGTHS (M.)	REINFORCEMENT	NUMBER OF LIFTING POINTS
10.00–14.00	8–DB 20 MM. OR 4–DB 28 MM.	ONE
14.01–20.00	8–DB 20 MM. OR 4–DB 28 MM.	TWO
20.01–25.00	8–DB 25 MM.	TWO

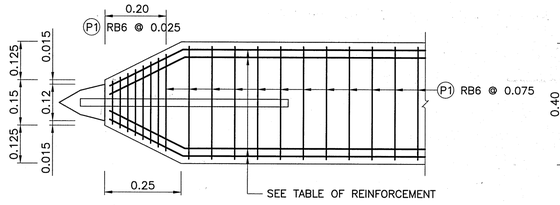

SECTION E – E
SCALE 1 : 10

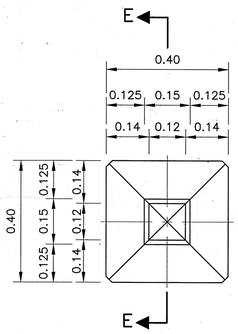

PILE SHOE SECTION
SCALE 1 : 10

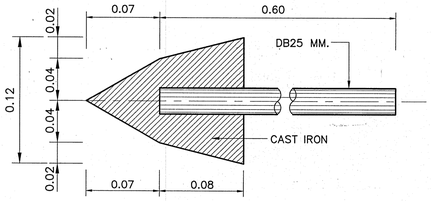

CAST IRON PILE DETAIL
NOT TO SCALE

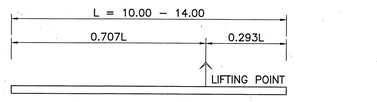

ONE–POINT LIFTING METHOD
NOT TO SCALE

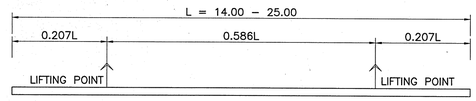

TWO–POINT LIFTING METHOD
NOT TO SCALE

DETAILS OF THE PILE SHOE USE DRIVEN PILE ON PARENT ROCK LAYER OR BEDROCK LAYER

NOTES :

1. ALL DIMENSIONS SHOWN ARE IN METERS UNLESS OTHERWISE INDICATED.
2. MATERIAL PROPERTIES ARE ACCORDING TO DWG. PL–001
3. PILE DESIGN CRITERIA SPECIFICATIONS ARE ACCORDING TO DWG. PL–001
4. THE MAXIMUM LOAD CAPACITY AND STATIC LOAD TEST OF PILE ARE ACCORDING TO DWG. PL–001
5. THE MINIMUM CONCRETE COMPRESSIVE STRENGTH IS REQUIRED ACCORDING TO DWG. PL–001
6. THE DIFFERENT PILE SHOE SHALL BE APPROVED
7. THE MINIMUM CONCRETE COVERING IS 5.0 CM.
8. CONCRETE CORNER CHAMFER IS 2.00 CM. UNLESS OTHERWISE INDICATED.
9. FREE STANDING HEIGHT OF PILE SHALL NOT EXCEED 3.00 M. FOR OTHER SUITABLE FREE STANDING HEIGHT SHALL BE DESIGNED

VOID

REF.	REVISION	SIGNATURE	DATE

KINGDOM OF THAILAND
MINISTRY OF TRANSPORT
DEPARTMENT OF HIGHWAYS

STANDARD DRAWING
R.C. PILES
0.40x0.40 M. PILE CAPACITY AND REINFORCEMENT DETAILS

DESIGNED : D.O.H. & CONSULTANTS	CHECKED : BUREAU OF LOCATION & DESIGN	DATE : OCT 2015
SUBMITTED : (DIRECTOR OF LOCATION & DESIGN BUREAU)		SCALE : AS SHOWN
APPROVED : (FOR DIRECTOR GENERAL)		DWG NO. PL–101
		SHEET NO. 307

D:\std dwg 2015\PL-101(REV00)

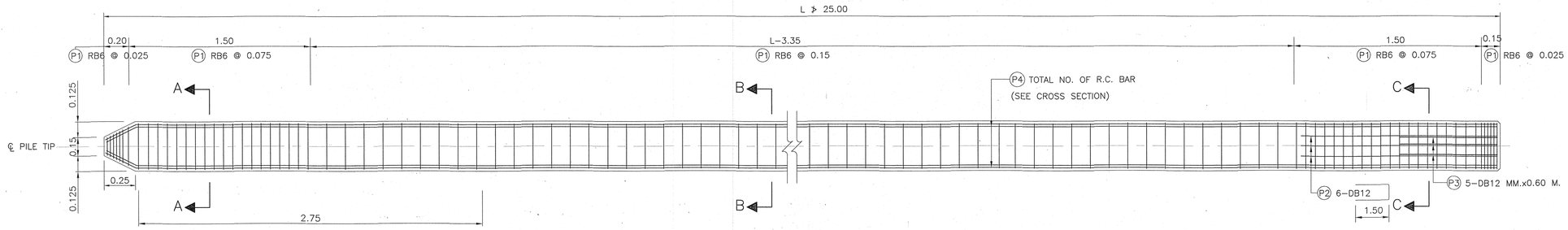

REINFORCEMENT DETAILS
SCALE 1 : 20

REINFORCEMENT SCHEDULE

BAR MARK	TYPE& SIZE(MM.)	SPACING (MM.)	SHAPE CODE	LENGTH (MM.)	
				a	b
P1	RB 6	25, 75, 150	A	300 OR VARIES	300 OR VARIES
P2	DB12	–	C	1500	288
P3	DB12	–	B	600	–
P4	SEE TABLE A	–	B	LENGTH OF PILE	
P5	DB25	–	B	3000	–

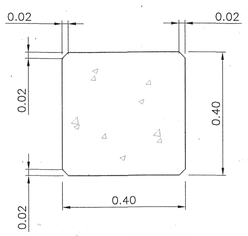

PILE SECTION
SCALE 1 : 10

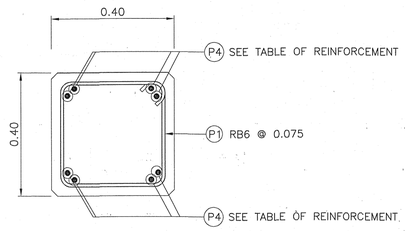

SECTION A – A
SCALE 1 : 10

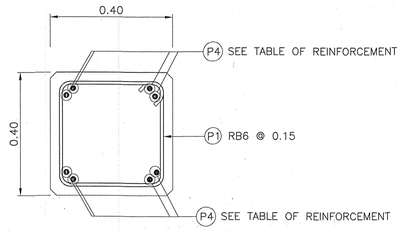

SECTION B – B
SCALE 1 : 10

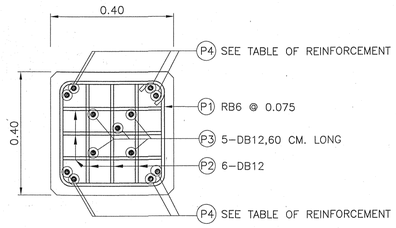

SECTION C – C
SCALE 1 : 10

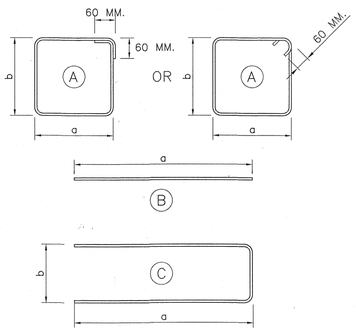

BAR SHAPE CODE

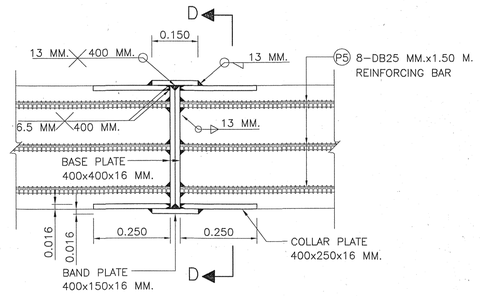

SPLICING JOINT DETAILS FOR TOTAL LENGHT > 25.00
SCALE 1 : 10

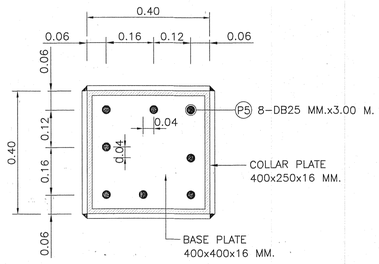

SECTION D – D
SCALE 1 : 10

TABLE "A" (AMOUNT REINFORCEMENT)

LENGTHS (M.)	REINFORCEMENT	NUMBER OF LIFTING POINTS
⩽ 14.00	8–DB 20 MM. OR 4–DB 28 MM.	ONE
14.01–20.00	8–DB 20 MM. OR 4–DB 28 MM.	TWO
20.01–25.00	8–DB 25 MM.	TWO

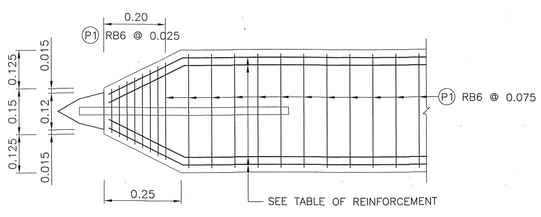

SECTION E – E
SCALE 1 : 10

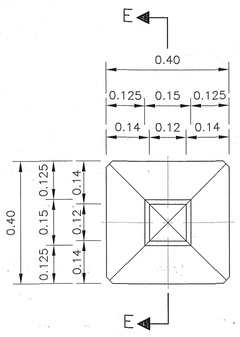

PILE SHOE SECTION
SCALE 1 : 10

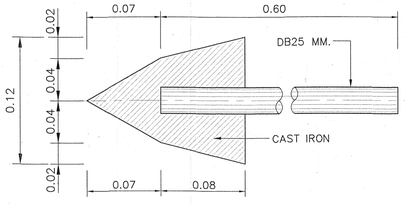

CAST IRON PILE DETAIL
NOT TO SCALE

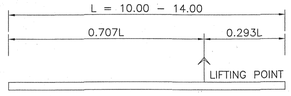

ONE–POINT LIFTING METHOD
NOT TO SCALE

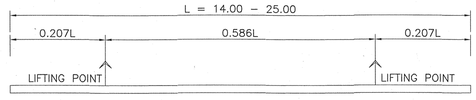

TWO–POINT LIFTING METHOD
NOT TO SCALE

NOTES :

1. ALL DIMENSIONS SHOWN ARE IN METERS UNLESS OTHERWISE INDICATED.
2. MATERIAL PROPERTIES ARE ACCORDING TO DWG. PL–001
3. PILE DESIGN CRITERIA SPECIFICATIONS ARE ACCORDING TO DWG. PL–001
4. THE MAXIMUM LOAD CAPACITY AND STATIC LOAD TEST OF PILE ARE ACCORDING TO DWG. PL–001
5. THE MINIMUM CONCRETE COMPRESSIVE STRENGTH IS REQUIRED ACCORDING TO DWG. PL–001
6. THE DIFFERENT PILE SHOE SHALL BE APPROVED
7. THE MINIMUM CONCRETE COVERING IS 5.0 CM.
8. CONCRETE CORNER CHAMFER IS 2.00 CM. UNLESS OTHERWISE INDICATED.
9. FREE STANDING HEIGHT OF PILE SHALL NOT EXCEED 3.00 M. FOR OTHER SUITABLE FREE STANDING HEIGHT SHALL BE DESIGNED

DETAILS OF THE PILE SHOE USE DRIVEN PILE ON PARENT ROCK LAYER OR BEDROCK LAYER

REV.	REVISION	SIGNATURE	DATE
REV.1	REVISION 1/2021		JAN 2021

KINGDOM OF THAILAND
MINISTRY OF TRANSPORT
DEPARTMENT OF HIGHWAYS

STANDARD DRAWING
R.C. PILES
0.40x0.40 M. PILE CAPACITY AND REINFORCEMENT DETAILS

DESIGNED : D.O.H. & CONSULTANTS	**CHECKED :** BUREAU OF LOCATION & DESIGN	**DATE :** OCT 2015
SUBMITTED : (DIRECTOR OF LOCATION & DESIGN BUREAU)		**SCALE :** AS SHOWN
APPROVED : (FOR DIRECTOR GENERAL)		**DWG NO.** PL–101
		SHEET NO. 307/R1

D:\DOH\2-แบบมาตรฐาน กรมทางหลวง\1-STANDARD FINAL-1-CAD(ENG)_2015\7_แก้ไขครั้งที่ 5\PL-101(REV01)

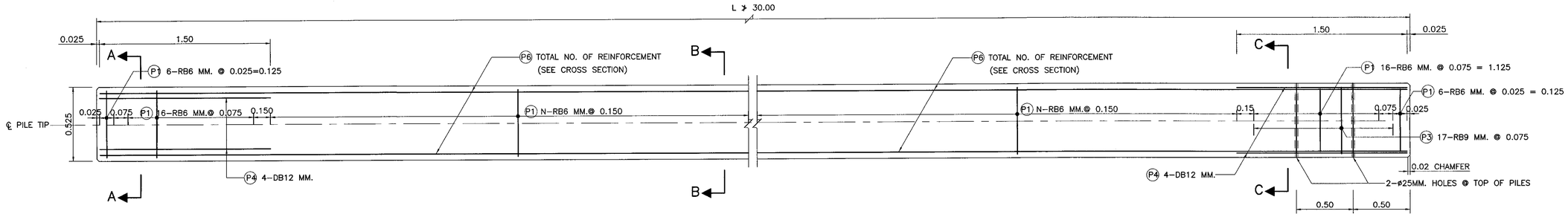

REINFORCEMENT DETAILS
SCALE 1 : 20

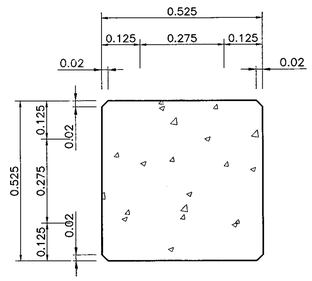

PILE SECTION
SCALE 1 : 10

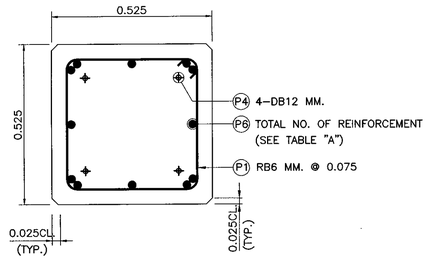

SECTION A – A
SCALE 1 : 10

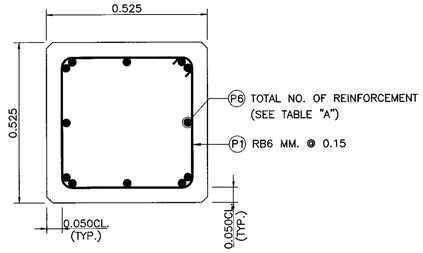

SECTION B – B
SCALE 1 : 10

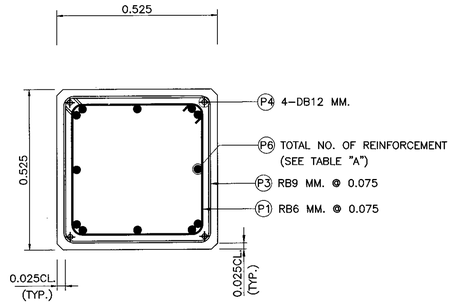

SECTION C – C
SCALE 1 : 10

REINFORCEMENT SCHEDULE

BAR MARK	TYPE& SIZE(MM.)	SPACING (MM.)	SHAPE CODE	LENGTH (MM.)	
				a	b
P1	RB6	25, 75, 150	A	425	425
P3	RB9	75	A	475	475
P4	DB12	–	B	1500	–
P5	DB25	–	B	1500	–
P6	DB28	–	A	LENGTH OF PILE	

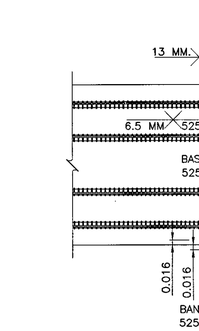

SPLICING JOINT DETAILS FOR TOTAL LENGHT > 30.00
SCALE 1 : 10

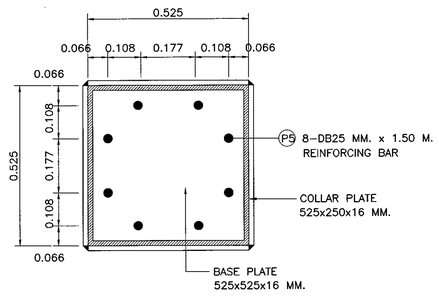

SECTION D – D
SCALE 1 : 10

TABLE "A" (AMOUNT REINFORCEMENT)

LENGTHS (M.)	REINFORCEMENT	NUMBER OF LIFTING POINTS
10.00–14.00	8–DB 28 MM.	ONE
14.01–20.00	8–DB 28 MM.	TWO
20.01–26.00	12–DB 28 MM.	TWO
26.01–30.00	12–DB 28 MM.	TWO

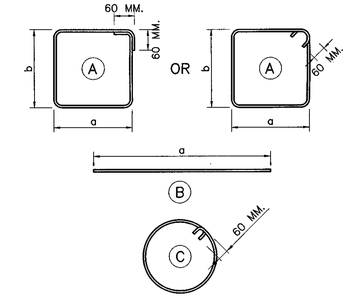

BAR SHAPE CODE

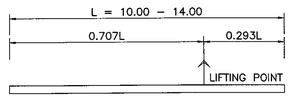

ONE–POINT LIFTING METHOD
NOT TO SCALE

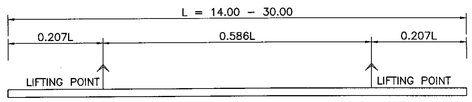

TWO–POINT LIFTING METHOD
NOT TO SCALE

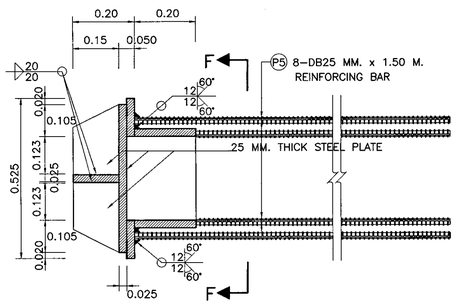

PILE SHOE SECTION E – E
SCALE 1 : 10

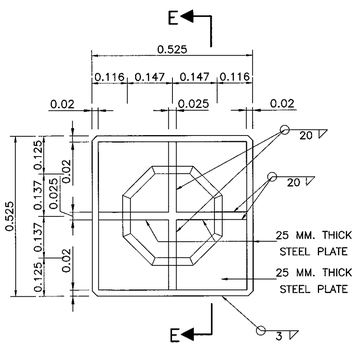

PILE TIP ELEVATION
SCALE 1 : 10

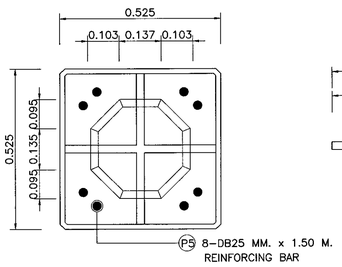

SECTION F – F
SCALE 1 : 10

DETAILS OF THE PILE SHOE USE DRIVEN PILE ON PARENT ROCK LAYER OR BEDROCK LAYER

NOTES :

1. ALL DIMENSIONS SHOWN ARE IN METERS UNLESS OTHERWISE INDICATED.
2. MATERIAL PROPERTIES ARE ACCORDING TO DWG. PL–001
3. PILE DESIGN CRITERIA SPECIFICATIONS ARE ACCORDING TO DWG. PL–001
4. THE MAXIMUM LOAD CAPACITY AND STATIC LOAD TEST OF PILE ARE ACCORDING TO DWG. PL–001
5. THE MINIMUM CONCRETE COMPRESSIVE STRENGTH IS REQUIRED ACCORDING TO DWG. PL–001
6. THE DIFFERENT PILE SHOE SHALL BE APPROVED
7. THE MINIMUM CONCRETE COVERING IS 5.0 CM.
8. CONCRETE CORNER CHAMFER IS 2.00 CM. UNLESS OTHERWISE INDICATED.
9. FREE STANDING HEIGHT OF PILE SHALL NOT EXCEED 3.00 M. FOR OTHER SUITABLE FREE STANDING HEIGHT SHALL BE DESIGNED

KINGDOM OF THAILAND
MINISTRY OF TRANSPORT
DEPARTMENT OF HIGHWAYS

STANDARD DRAWING
R.C. PILES
0.525x0.525 M. PILE CAPACITY AND REINFORCEMENT DETAILS

DESIGNED : D.O.H. & CONSULTANTS	CHECKED : BUREAU OF LOCATION & DESIGN	DATE : OCT 2015
SUBMITTED : (DIRECTOR OF LOCATION & DESIGN BUREAU)		SCALE : AS SHOWN
APPROVED : (FOR DIRECTOR GENERAL)		DWG NO. PL–102
		SHEET NO. 308

REF.	REVISION	SIGNATURE	DATE

D:\std dwg 2015\PL-102(REV00)

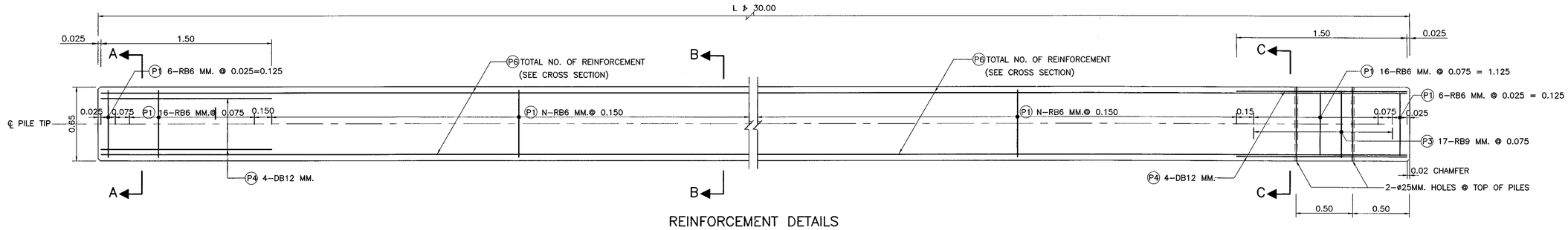

REINFORCEMENT DETAILS
SCALE 1 : 20

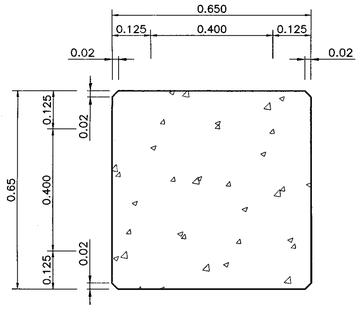

PILE SECTION
SCALE 1 : 10

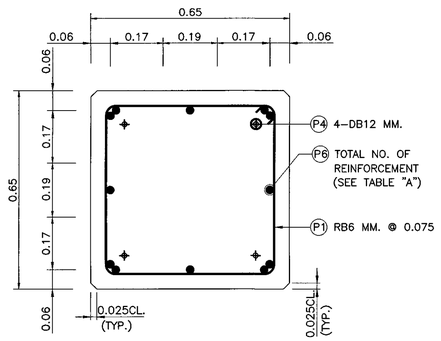

SECTION A – A
SCALE 1 : 10

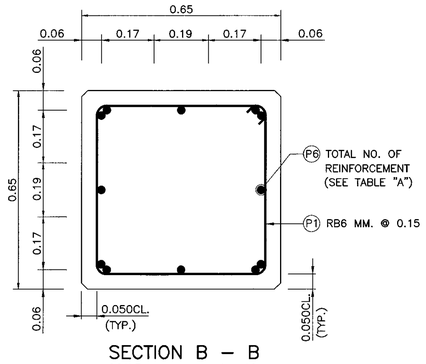

SECTION B – B
SCALE 1 : 10

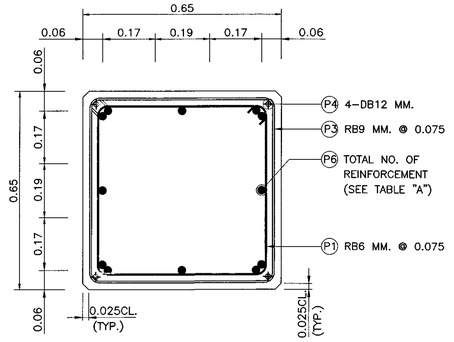

SECTION C – C
SCALE 1 : 10

REINFORCEMENT SCHEDULE

BAR MARK	TYPE& SIZE(MM.)	SPACING (MM.)	SHAPE CODE	LENGTH (MM.)	
				a	b
P1	RB6	25, 75, 150	A	550	550
P3	RB9	75	A	600	600
P4	DB12	–	B	1500	–
P5	DB25	–	B	1500	–
P6	DB28	–	A	LENGTH OF PILE	

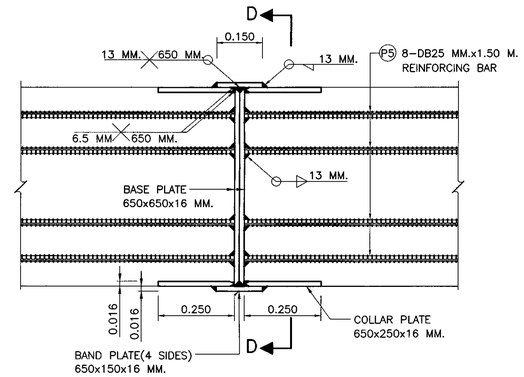

SPLICING JOINT DETAILS FOR TOTAL LENGHT > 30.00
SCALE 1 : 10

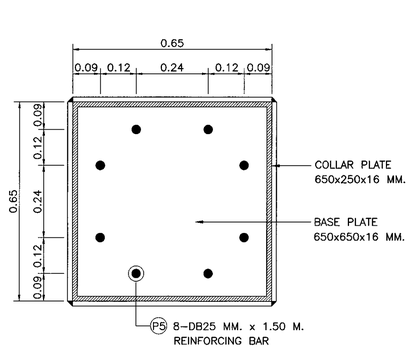

SECTION D – D
SCALE 1 : 10

TABLE "A" (AMOUNT REINFORCEMENT)

LENGTHS (M.)	REINFORCEMENT	NUMBER OF LIFTING POINTS
10.00–14.00	12–DB 28 MM.	ONE
14.01–20.00	12–DB 28 MM.	TWO
20.01–26.00	12–DB 28 MM.	TWO
26.01–30.00	12–DB 28 MM.	TWO

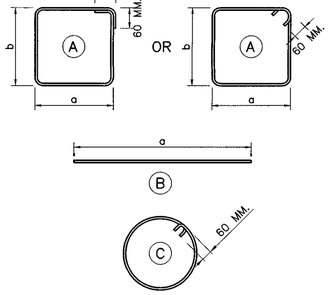

BAR SHAPE CODE

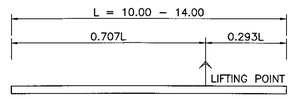

ONE–POINT LIFTING METHOD
NOT TO SCALE

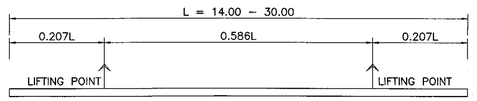

TWO–POINT LIFTING METHOD
NOT TO SCALE

NOTES :

1. ALL DIMENSIONS SHOWN ARE IN METERS UNLESS OTHERWISE INDICATED.
2. MATERIAL PROPERTIES ARE ACCORDING TO DWG. PL–001
3. PILE DESIGN CRITERIA SPECIFICATIONS ARE ACCORDING TO DWG. PL–001
4. THE MAXIMUM LOAD CAPACITY AND STATIC LOAD TEST OF PILE ARE ACCORDING TO DWG. PL–001
5. THE MINIMUM CONCRETE COMPRESSIVE STRENGTH IS REQUIRED ACCORDING TO DWG. PL–001
6. THE DIFFERENT PILE SHOE SHALL BE APPROVED
7. THE MINIMUM CONCRETE COVERING IS 5.0 CM.
8. CONCRETE CORNER CHAMFER IS 2.00 CM. UNLESS OTHERWISE INDICATED.
9. FREE STANDING HEIGHT OF PILE SHALL NOT EXCEED 3.00 M. FOR OTHER SUITABLE FREE STANDING HEIGHT SHALL BE DESIGNED

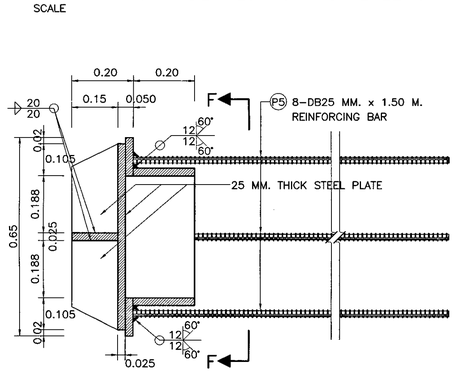

PILE SHOE SECTION E – E
SCALE 1 : 10

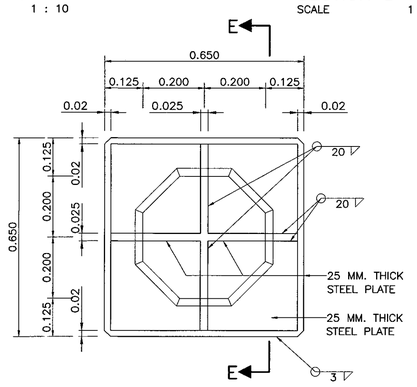

PILE TIP ELEVATION
SCALE 1 : 10

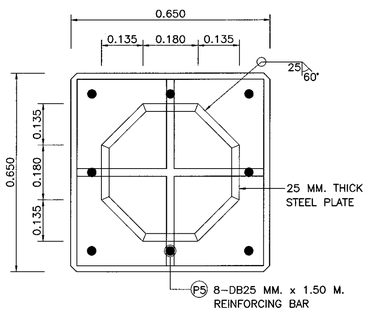

SECTION F – F
SCALE 1 : 10

DETAILS OF THE PILE SHOE USE DRIVEN PILE ON PARENT ROCK LAYER OR BEDROCK LAYER

REF.	REVISION	SIGNATURE	DATE

KINGDOM OF THAILAND
MINISTRY OF TRANSPORT
DEPARTMENT OF HIGHWAYS

STANDARD DRAWING
R.C. PILES
0.65x0.65 M. PILE CAPACITY AND REINFORCEMENT DETAILS

DESIGNED : D.O.H. & CONSULTANTS	**CHECKED :** BUREAU OF LOCATION & DESIGN	**DATE :** OCT 2015
SUBMITTED : (DIRECTOR OF LOCATION & DESIGN BUREAU)		**SCALE :** AS SHOWN
APPROVED : (FOR DIRECTOR GENERAL)		**DWG NO.** PL–103
		SHEET NO. 309

D:\std dwg 2015\PL-103(REV00)

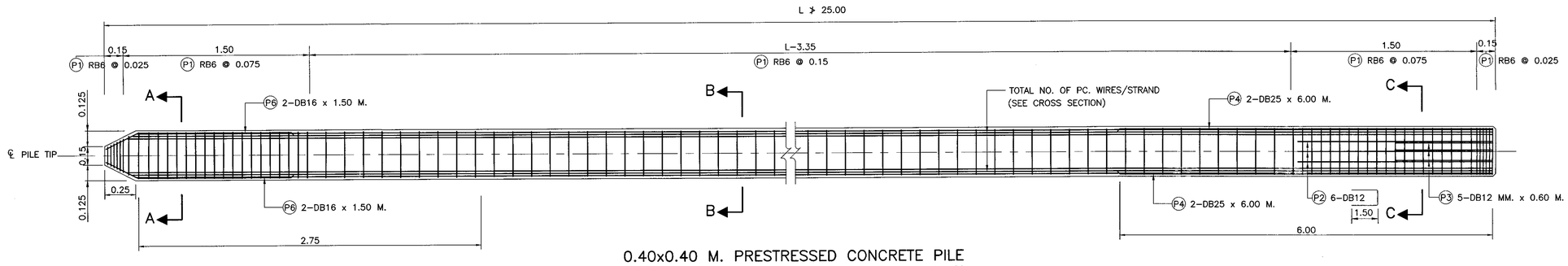

0.40x0.40 M. PRESTRESSED CONCRETE PILE
SCALE 1 : 20

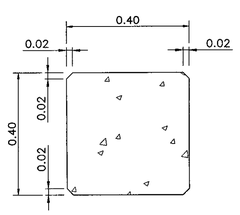

PILE SECTION
SCALE 1 : 10

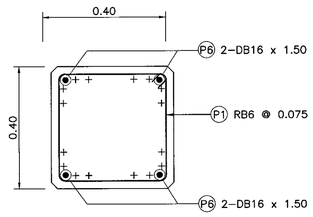

SECTION A – A
SCALE 1 : 10

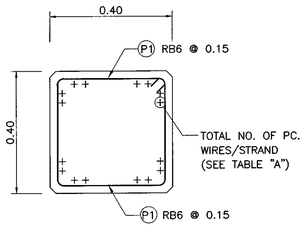

SECTION B – B
SCALE 1 : 10

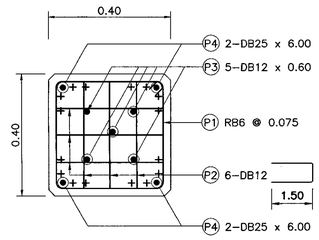

SECTION C – C
SCALE 1 : 10

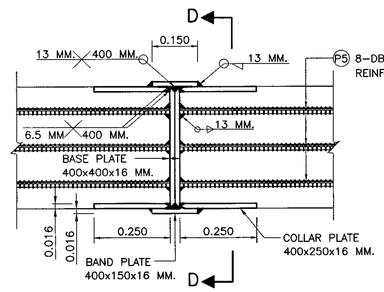

SPLICING JOINT DETAILS FOR TOTAL LENGHT > 25.00
SCALE 1 : 10

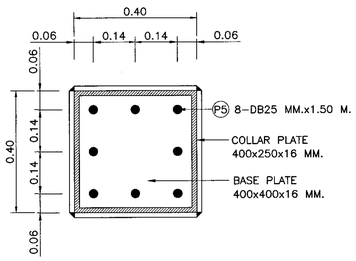

SECTION D – D
SCALE 1 : 10

TABLE "A" (AMOUNT PRESTRESSING TENDONS)

LENGTHS (M.)	NUMBER AND DIA.(ø) OF PC. WIRES	NUMBER AND DIA.(ø) OF STRANDS	NUMBER AND DIA.(ø) OF STRANDS	NUMBER OF LIFTING POINTS
10.00–14.00	24–ø 7.0 MM.	16–ø 9.53 MM.	8–ø 12.7 MM.	ONE
14.01–20.00	24–ø 7.0 MM.	16–ø 9.53 MM.	8–ø 12.7 MM.	TWO
20.01–25.00	24–ø 7.0 MM.	16–ø 9.53 MM.	8–ø 12.7 MM.	TWO

NOTES :

1. ALL DIMENSIONS SHOWN ARE IN METERS UNLESS OTHERWISE INDICATED.
2. MATERIAL PROPERTIES ARE ACCORDING TO DWG. PL–001
3. PILE DESIGN CRITERIA AND SPECIFICATIONS ARE ACCORDING TO DWG. PL–001
4. THE MINIMUM INITIAL PRESTRESSING FORCE EXCLUDING SLIP LOSS IN WIRE STRANDS AND 7–WIRE STRANDS AS FOLLOWS
   - ø7.00 MM. WIRE STRANDS 45 KN./STRAND
   - ø9.53 MM. 7–WIRE STRANDS 71.3 KN./STRAND
   - ø12.7 MM. 7–WIRE STRANDS 128.5 KN./STRAND
5. THE ALLOWABLE COMPRESSION CUBE STRENGTH OF CONCRETE AT INITIAL PRESTRESS SHALL BE AT LEAST 35 MPa
6. THE SPIRAL REINFORCEMENT IS PERMITTED
7. MAXIMUM PAYLOAD AND A LOAD CAPACITY OF PILE ACCORDING TO DWG. PL–001
8. THE PILE WILL BE AVAILABLE WHEN CONCRETE COMPRESSIVE STRENGTH AFTER 28 DAYS NO LESS THAN THE SPECIFIED ACCORDING TO DWG. PL–001
9. USE DRIVEN PILE ON PARENT ROCK LAYER OR BEDROCK LAYER, PILE SHOE ACCORDING TO DWG. PL–001
10. CONTRACTORS USE THE PATTERNS AT PILE SHOE DIFFERENT FROM DWG.PL–101. THE CONTRACTOR PRESENT PILE SHOE TO THE OWNERS OF SURVEY AND DESIGN FOR APPROVAL BEFORE SO WILL BE USED IN CONSTRUCTION
11. THE THICKNESS OF THE CONCRETE COVERING STEEL IS 5.0 CM.
12. REMOVE ALL CORNER CONCRETE IS VISIBLE 2.0 CM. UNLESS OTHERWISE INDICATED.
13. FREE STANDING HEIGHT OF PILE SHALL NOT EXCEED 3.00 M. FOR OTHER SUITABLE FREE STANDING HEIGHT SHALL BE DESIGNED

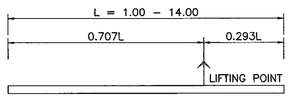

ONE–POINT LIFTING METHOD
NOT TO SCALE

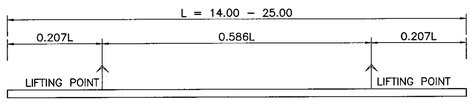

TWO–POINT LIFTING METHOD
NOT TO SCALE

REINFORCEMENT SCHEDULE

BAR MARK	TYPE& SIZE(MM.)	SPACING (MM.)	SHAPE CODE	LENGTH (MM.)	
				a	b
P1	RB6	25, 75, 150	A	300	300
P2	DB12	–	C	1500	288
P3	DB12	–	B	600	–
P4	DB25	–	B	6000	–
P5	DB25	–	B	1500	–
P6	DB16	–	B	1500	–

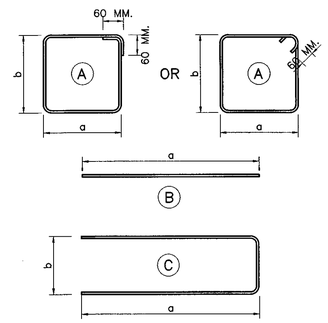

BAR SHAPE CODE

REF.	REVISION	SIGNATURE	DATE

KINGDOM OF THAILAND
MINISTRY OF TRANSPORT
DEPARTMENT OF HIGHWAYS

STANDARD DRAWING
PC. PILES
0.40x0.40 M. PILE CAPACITY AND REINFORCEMENT DETAILS

DESIGNED : D.O.H. & CONSULTANTS	CHECKED : BUREAU OF LOCATION & DESIGN	DATE : OCT 2015
SUBMITTED : (DIRECTOR OF LOCATION & DESIGN BUREAU)		SCALE : AS SHOWN
APPROVED : (FOR DIRECTOR GENERAL)		DWG NO. PL–201
		SHEET NO. 310

D:\std dwg 2015\PL-201(REV00)

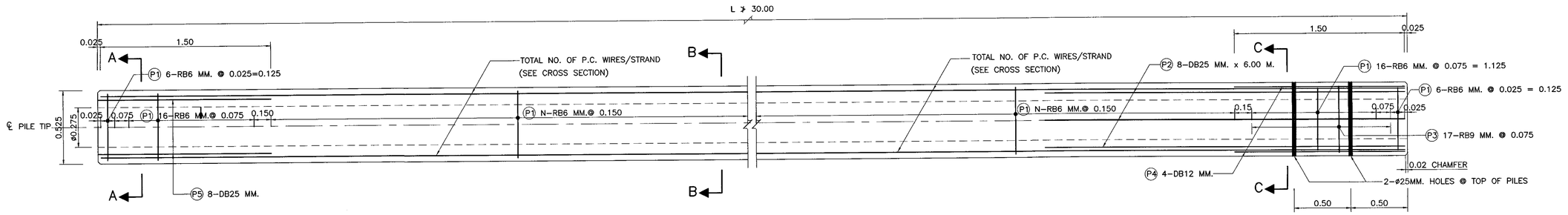

0.525x0.525 M. PRESTRESSED CONCRETE PILE
SCALE 1 : 20

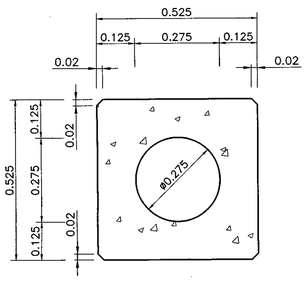

PILE SECTION
SCALE 1 : 10

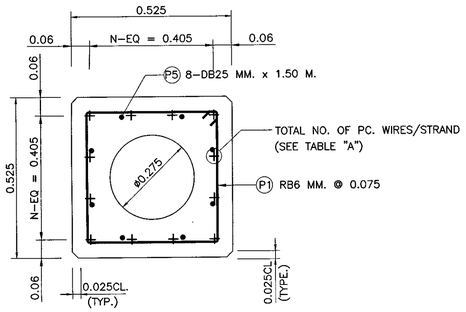

SECTION A – A
SCALE 1 : 10

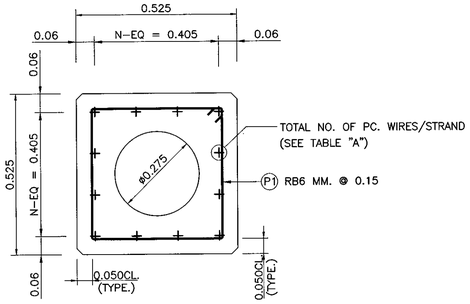

SECTION B – B
SCALE 1 : 10

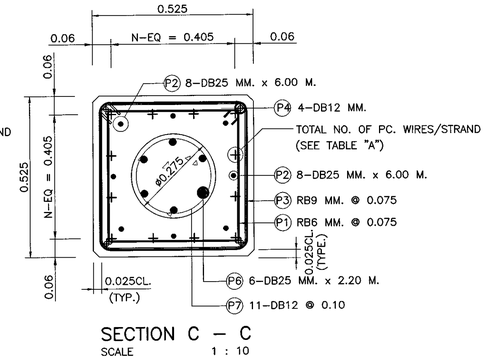

SECTION C – C
SCALE 1 : 10

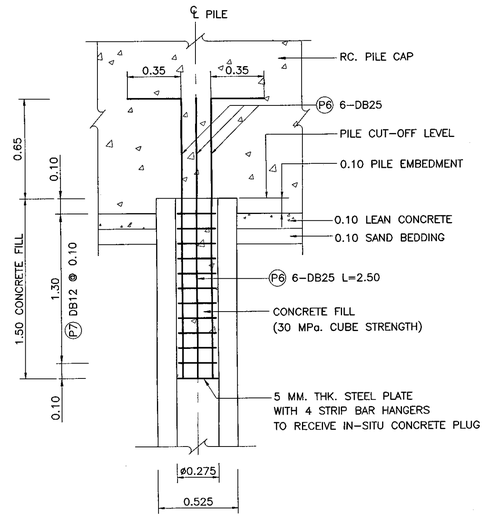

PILE HEAD DETAILS
SCALE 1 : 20

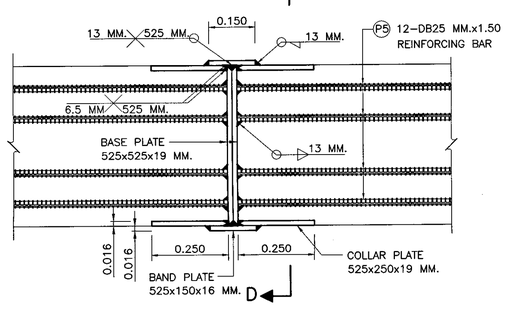

SPLICING JOINT DETAILS FOR TOTAL LENGHT > 30.00
SCALE 1 : 10

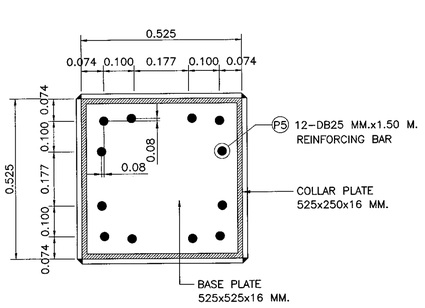

SECTION D – D
SCALE 1 : 10

TABLE "A" (AMOUNT PRESTRESSING TENDONS)

LENGTHS (M.)	NUMBER AND DIA.(ø) OF P.C. WIRES	NUMBER AND DIA.(ø) OF STRANDS	NUMBER AND DIA.(ø) OF STRANDS	NUMBER OF LIFTING POINTS
10.00–14.00	32–ø 7.0 MM.	20–ø 9.53 MM.	12–ø 12.7 MM.	ONE
14.01–20.00	32–ø 7.0 MM.	20–ø 9.53 MM.	12–ø 12.7 MM.	TWO
20.01–26.00	32–ø 7.0 MM.	20–ø 9.53 MM.	12–ø 12.7 MM.	TWO
26.01–30.00	32–ø 7.0 MM.	20–ø 9.53 MM.	12–ø 12.7 MM.	TWO

NOTES :

1. ALL DIMENSIONS SHOWN ARE IN METERS UNLESS OTHERWISE INDICATED.
2. MATERIAL PROPERTIES ARE ACCORDING TO DWG. PL–001
3. PILE DESIGN CRITERIA AND SPECIFICATIONS ARE ACCORDING TO DWG. PL–001
4. THE MINIMUM INITIAL PRESTRESSING FORCE EXCLUDING SLIP LOSS IN WIRE STRANDS AND 7–WIRE STRANDS AS FOLLOWS
   - ø7.00 MM. WIRE STRANDS 45 KN./STRAND
   - ø9.53 MM. 7–WIRE STRANDS 71.3 KN./STRAND
   - ø12.7 MM. 7–WIRE STRANDS 128.5 KN./STRAND
5. THE ALLOWABLE COMPRESSION CUBE STRENGTH OF CONCRETE AT INITIAL PRESTRESS SHALL BE AT LEAST 35 MPa
6. THE SPIRAL REINFORCEMENT IS PERMITTED
7. MAXIMUM PAYLOAD AND A LOAD CAPACITY OF PILE ACCORDING TO DWG. PL–001
8. THE PILE WILL BE AVAILABLE WHEN CONCRETE COMPRESSIVE STRENGTH AFTER 28 DAYS NO LESS THAN THE SPECIFIED ACCORDING TO DWG. PL–001
9. USE DRIVEN PILE ON PARENT ROCK LAYER OR BEDROCK LAYER, PILE SHOE ACCORDING TO DWG. PL–001
10. CONTRACTORS USE THE PATTERNS AT PILE SHOE DIFFERENT FROM DWG.PL–101. THE CONTRACTOR PRESENT PILE SHOE TO THE OWNERS OF SURVEY AND DESIGN FOR APPROVAL BEFORE SO WILL BE USED IN CONSTRUCTION
11. THE THICKNESS OF THE CONCRETE COVERING STEEL IS 5.0 CM.
12. REMOVE ALL CORNER CONCRETE IS VISIBLE 2.0 CM. UNLESS OTHERWISE INDICATED.
13. FREE STANDING HEIGHT OF PILE SHALL NOT EXCEED 3.00 M. FOR OTHER SUITABLE FREE STANDING HEIGHT SHALL BE DESIGNED

REINFORCEMENT SCHEDULE

BAR MARK	TYPE& SIZE(MM.)	SPACING (MM.)	SHAPE CODE	LENGTH (MM.)	
				a	b
P1	RB6	25, 75, 150	A	425	425
P2	DB25	–	B	6000	–
P3	RB9	75	A	475	475
P4	DB12	–	B	1500	–
P5	DB25	–	B	1500	–
P6	DB 25	–	B	2500	–
P7	DB12	25	C		

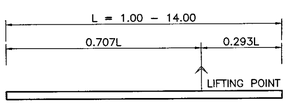

ONE–POINT LIFTING METHOD
NOT TO SCALE

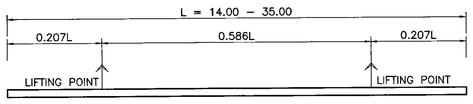

TWO–POINT LIFTING METHOD
NOT TO SCALE

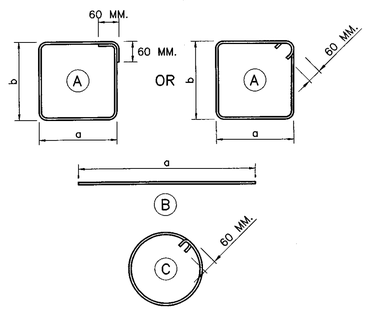

BAR SHAPE CODE

REF.	REVISION	SIGNATURE	DATE

KINGDOM OF THAILAND
MINISTRY OF TRANSPORT
DEPARTMENT OF HIGHWAYS

STANDARD DRAWING
PC. PILES
0.525x0.525 M. PILE CAPACITY AND REINFORCEMENT DETAILS

DESIGNED : D.O.H. & CONSULTANTS	CHECKED : BUREAU OF LOCATION & DESIGN	DATE : OCT 2015
SUBMITTED : (DIRECTOR OF LOCATION & DESIGN BUREAU)		SCALE : AS SHOWN
APPROVED : (FOR DIRECTOR GENERAL)		DWG NO. PL–202
		SHEET NO. 311

D:\std dwg 2015\PL-202(REV00)

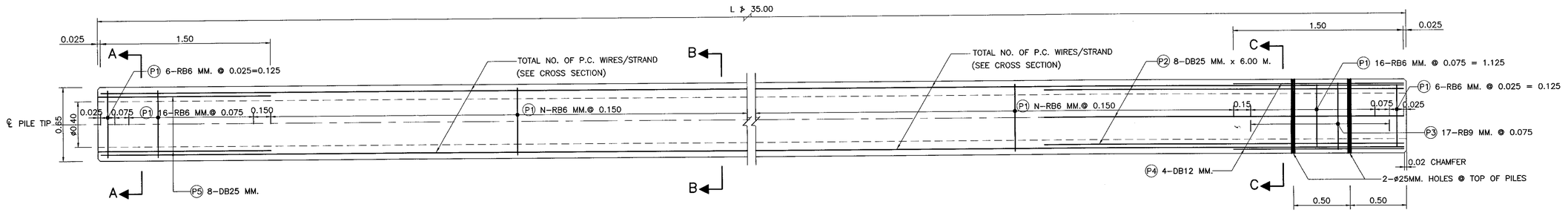

0.65x0.65 M. PRESTRESSED CONCRETE PILE
SCALE 1 : 20

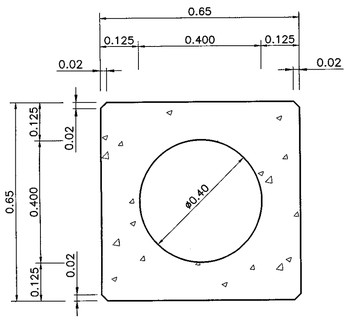

PILE SECTION
SCALE 1 : 10

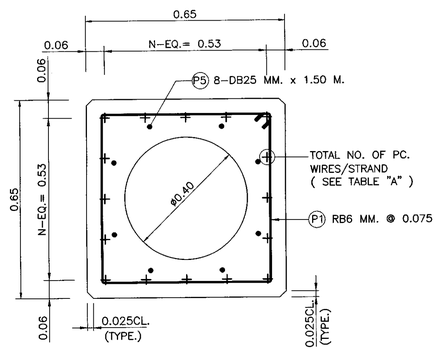

SECTION A – A
SCALE 1 : 10

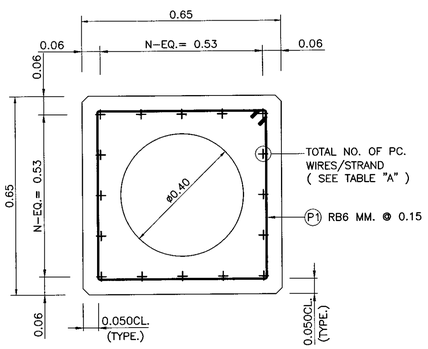

SECTION B – B
SCALE 1 : 10

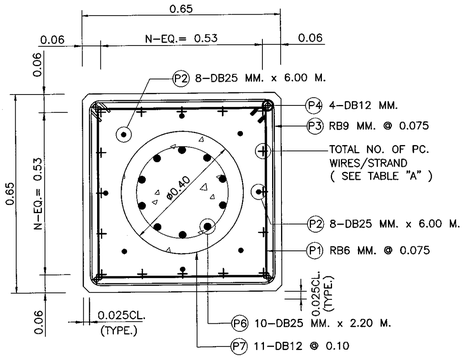

SECTION C – C
SCALE 1 : 10

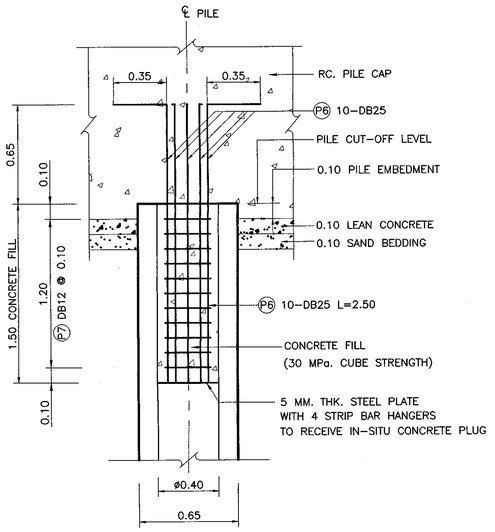

PILE HEAD DETAILS
SCALE 1 : 20

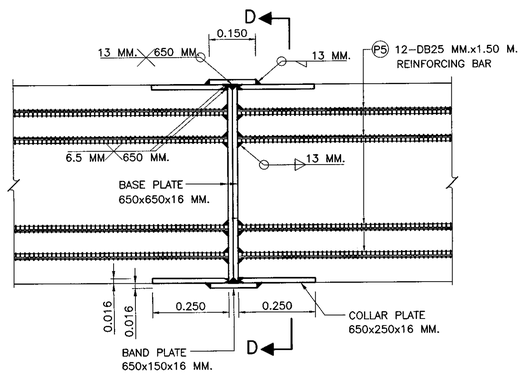

SPLICING JOINT DETAILS FOR TOTAL LENGHT > 30.00
SCALE 1 : 10

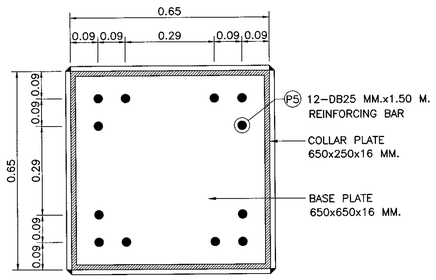

SECTION D – D
SCALE 1 : 10

TABLE "A" (AMOUNT PRESTRESSING TENDONS)

LENGTHS (M.)	NUMBER AND DIA.(ø) OF P.C. WIRES	NUMBER AND DIA.(ø) OF STRANDS	NUMBER AND DIA.(ø) OF STRANDS	NUMBER OF LIFTING POINTS
10.00–14.00	44–ø 7.0 MM.	28–ø 9.53 MM.	16–ø 12.7 MM.	ONE
14.01–20.00	44–ø 7.0 MM.	28–ø 9.53 MM.	16–ø 12.7 MM.	TWO
20.01–26.00	44–ø 7.0 MM.	28–ø 9.53 MM.	16–ø 12.7 MM.	TWO
26.01–30.00	48–ø 7.0 MM.	28–ø 9.53 MM.	16–ø 12.7 MM.	TWO
30.01–35.00	48–ø 7.0 MM.	28–ø 9.53 MM.	16–ø 12.7 MM.	TWO

REINFORCEMENT SCHEDULE

BAR MARK	TYPE& SIZE(MM.)	SPACING (MM.)	SHAPE CODE	LENGTH (MM.)	
				a	b
P1	RB6	25, 75, 150	A	550	550
P2	DB25	–	B	6000	–
P3	RB9	75	A	600	600
P4	DB12	–	B	1500	–
P5	DB25	–	B	1500	–
P6	DB25	–	B	2500	–
P7	DB12	25	C		

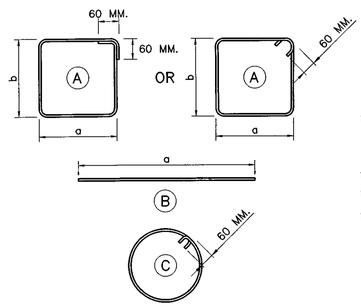

BAR SHAPE CODE

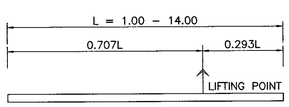

ONE–POINT LIFTING METHOD
NOT TO SCALE

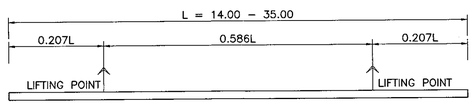

TWO–POINT LIFTING METHOD
NOT TO SCALE

NOTES :

1. ALL DIMENSIONS SHOWN ARE IN METERS UNLESS OTHERWISE INDICATED.
2. MATERIAL PROPERTIES ARE ACCORDING TO DWG. PL–001
3. PILE DESIGN CRITERIA AND SPECIFICATIONS ARE ACCORDING TO DWG. PL–001
4. THE MINIMUM INITIAL PRESTRESSING FORCE EXCLUDING SLIP LOSS IN WIRE STRANDS AND 7–WIRE STRANDS AS FOLLOWS
   - ø7.00 MM. WIRE STRANDS 45 KN./STRAND
   - ø9.53 MM. 7–WIRE STRANDS 71.3 KN./STRAND
   - ø12.7 MM. 7–WIRE STRANDS 128.5 KN./STRAND
5. THE ALLOWABLE COMPRESSION CUBE STRENGTH OF CONCRETE AT INITIAL PRESTRESS SHALL BE AT LEAST 35 MPa
6. THE SPIRAL REINFORCEMENT IS PERMITTED
7. MAXIMUM PAYLOAD AND A LOAD CAPACITY OF PILE ACCORDING TO DWG. PL–001
8. THE PILE WILL BE AVAILABLE WHEN CONCRETE COMPRESSIVE STRENGTH AFTER 28 DAYS NO LESS THAN THE SPECIFIED ACCORDING TO DWG. PL–001
9. USE DRIVEN PILE ON PARENT ROCK LAYER OR BEDROCK LAYER, PILE SHOE ACCORDING TO DWG. PL–001
10. CONTRACTORS USE THE PATTERNS AT PILE SHOE DIFFERENT FROM DWG.PL–101. THE CONTRACTOR PRESENT PILE SHOE TO THE OWNERS OF SURVEY AND DESIGN FOR APPROVAL BEFORE SO WILL BE USED IN CONSTRUCTION
11. THE THICKNESS OF THE CONCRETE COVERING STEEL IS 5.0 CM.
12. REMOVE ALL CORNER CONCRETE IS VISIBLE 2.0 CM. UNLESS OTHERWISE INDICATED.
13. FREE STANDING HEIGHT OF PILE SHALL NOT EXCEED 3.00 M. FOR OTHER SUITABLE FREE STANDING HEIGHT SHALL BE DESIGNED

REF.	REVISION	SIGNATURE	DATE

KINGDOM OF THAILAND
MINISTRY OF TRANSPORT
DEPARTMENT OF HIGHWAYS

STANDARD DRAWING
PC. PILES

0.65x0.65 M. PILE CAPACITY AND REINFORCEMENT DETAILS

DESIGNED : D.O.H. & CONSULTANTS	CHECKED : BUREAU OF LOCATION & DESIGN	DATE : OCT 2015
SUBMITTED : (DIRECTOR OF LOCATION & DESIGN BUREAU)		SCALE : AS SHOWN
APPROVED : (FOR DIRECTOR GENERAL)		DWG NO. PL–203
		SHEET NO. 312

D:\std dwg 2015\PL-203(REV00)

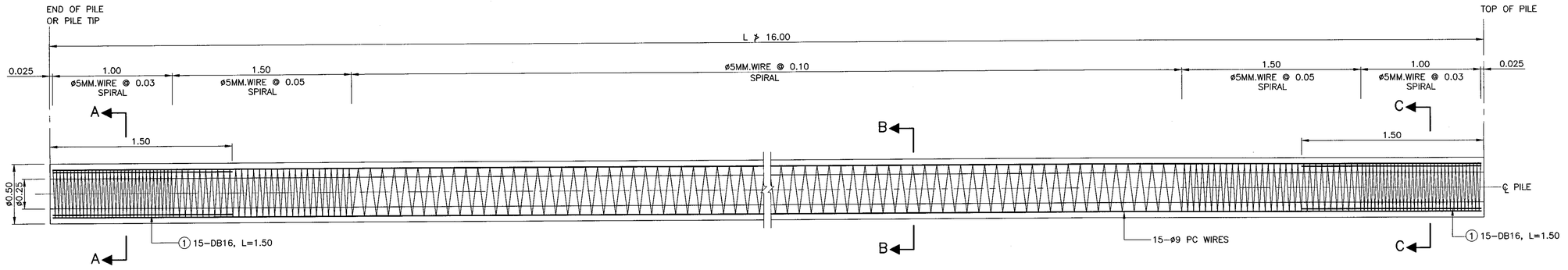

ø 0.50 M. HOLLOW SPUN PILE
SCALE 1 : 25

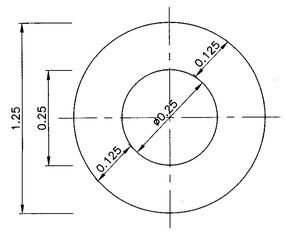

PILE SECTION
SCALE 1 : 10

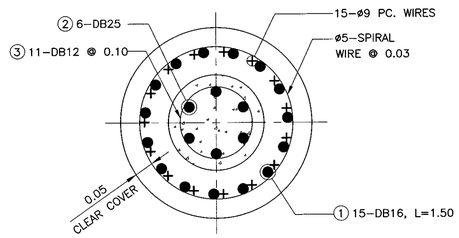

SECTION A – A
SCALE 1 : 10

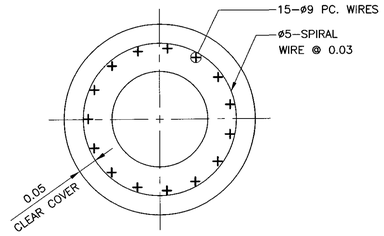

SECTION B – B
SCALE 1 : 10

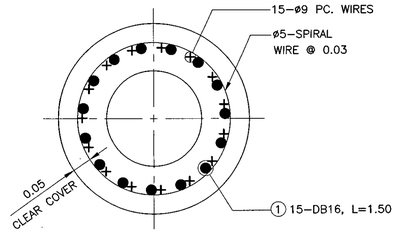

SECTION C – C
SCALE 1 : 10

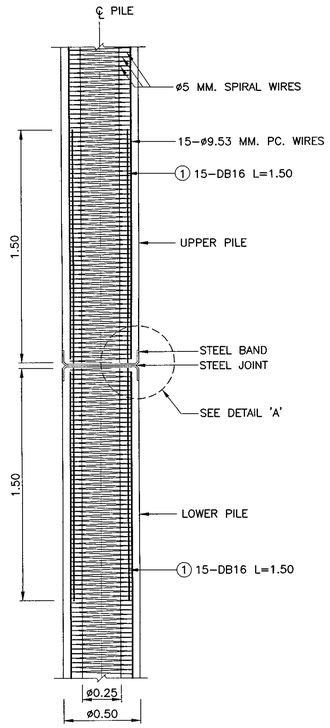

SPLICING JOINT DETAILS
SCALE 1 : 25

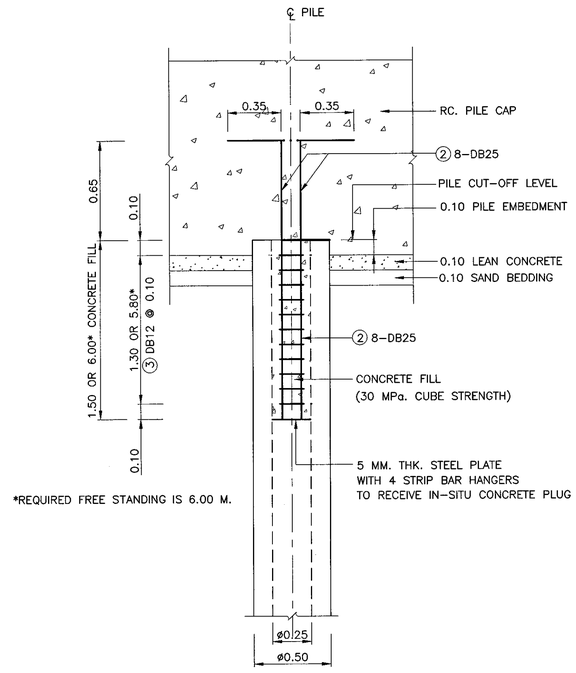

PILE HEAD DETAILS
SCALE 1 : 25

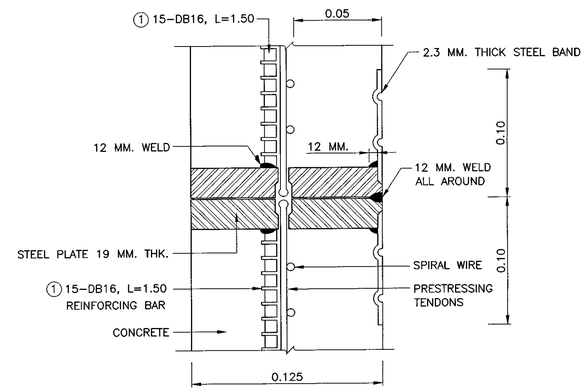

DETAIL "A"
SCALE 1 : 2.5

NOTES :

1. ALL DIMENSIONS SHOWN ARE IN METERS UNLESS OTHERWISE INDICATED.
2. MATERIAL PROPERTIES ARE ACCORDING TO DWG. PL-001
3. PILE DESIGN CRITERIA SPECIFICATIONS ARE ACCORDING TO DWG. PL-001
4. INITIAL PRESTRESSING FORCE NOT INCLUDE SLIP LOSS IN ø9 MM. WIRE STANDS IS 63.20 KN./WIRE
5. BEFORE CUT WIRE STANDS, CONCRETE SHALL HAVE CUBE 15 x 15 x 15 $CM.^3$ COMPRESSIVE STRENGTH NOT LESS THAN OF 35 MPa. (357KG/CM^2)
6. MAXIMUM PAYLOAD AND A LOAD CAPACITY OF PILE ACCORDING TO DWG. PL-001
7. THE PILE WILL BE AVAILABLE WHEN CONCRETE COMPRESSIVE STRENGTH AFTER 28 DAYS NO LESS THAN THE SPECIFIED ACCORDING TO DWG. PL-001
8. THE THICKNESS OF THE CONCRETE COVERING STEEL IS 5.0 CM.
9. REMOVE ALL CORNER CONCRETE IS VISIBLE 2.0 CM. UNLESS OTHERWISE INDICATED.
10. FREE STANDING HEIGHT OF PILE SHALL NOT EXCEED 3.00 M. FOR OTHER SUITABLE FREE STANDING HEIGHT SHALL BE DESIGNED

KINGDOM OF THAILAND
MINISTRY OF TRANSPORT
DEPARTMENT OF HIGHWAYS

STANDARD DRAWING
SPUN PILES
0.50 M. PILE CAPACITY AND REINFORCEMENT DETAILS

DESIGNED : D.O.H. & CONSULTANTS	CHECKED : BUREAU OF LOCATION & DESIGN	DATE : OCT 2015
SUBMITTED : (DIRECTOR OF LOCATION & DESIGN BUREAU)		SCALE : AS SHOWN
APPROVED : (FOR DIRECTOR GENERAL)		DWG NO. PL-301
		SHEET NO. 313

REF.	REVISION	SIGNATURE	DATE

D:\std dwg 2015\PL-301(REV00)

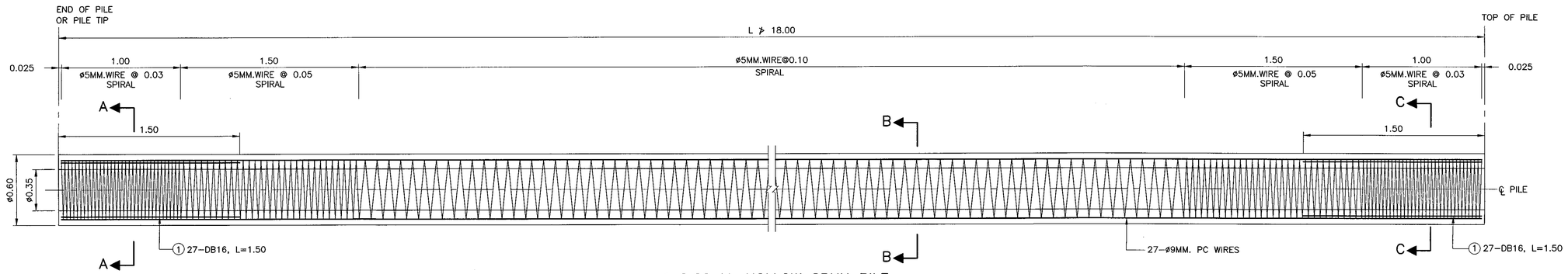

ø 0.60 M. HOLLOW SPUN PILE
SCALE 1 : 25

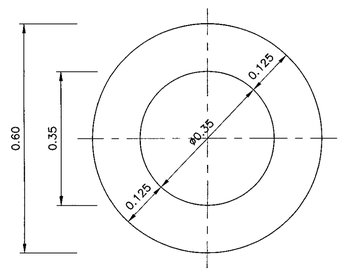

PILE SECTION
SCALE 1 : 10

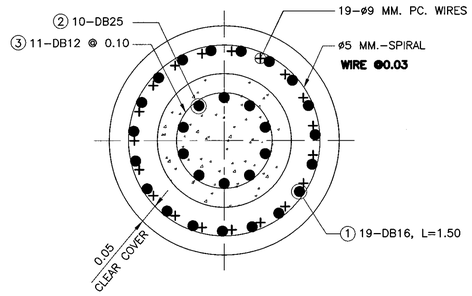

SECTION A – A
SCALE 1 : 10

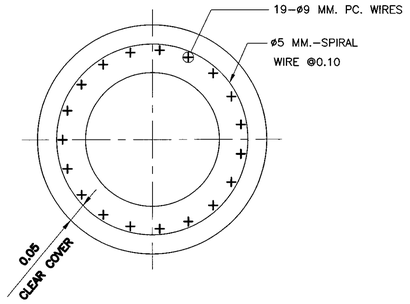

SECTION B – B
SCALE 1 : 10

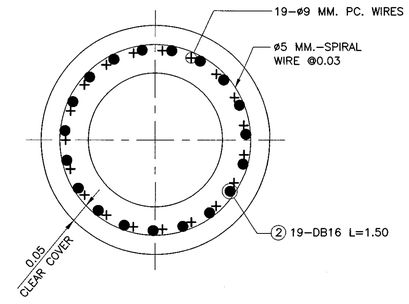

SECTION C – C
SCALE 1 : 10

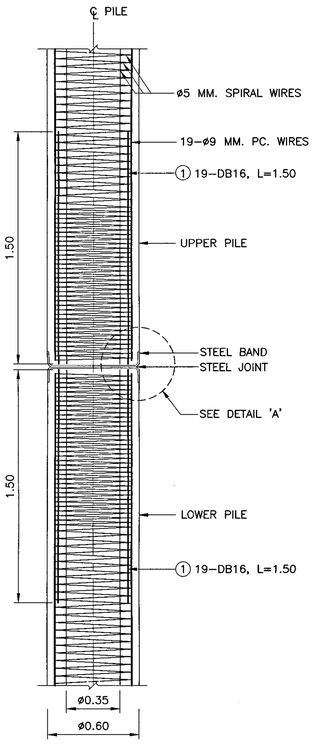

SPLICING JOINT DETAILS
SCALE 1 : 25

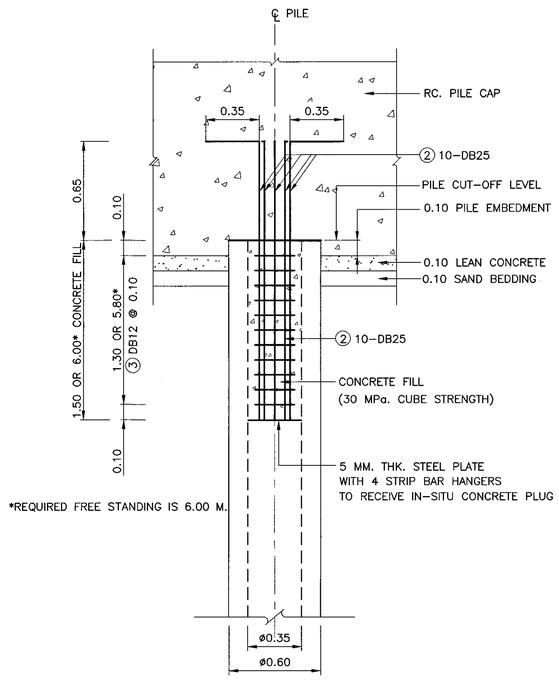

PILE HEAD DETAILS
SCALE 1 : 25

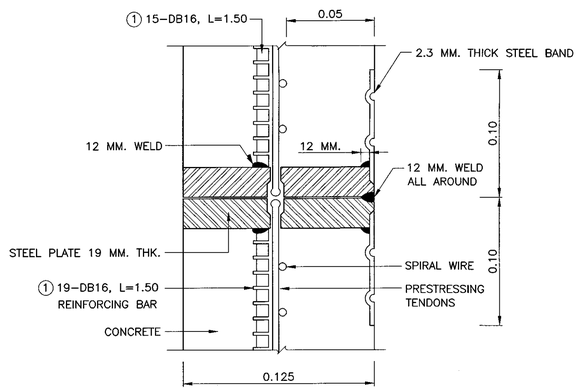

DETAIL "A"
SCALE 1 : 2.5

NOTES :

1. ALL DIMENSIONS SHOWN ARE IN METERS UNLESS OTHERWISE INDICATED.
2. MATERIAL PROPERTIES ARE ACCORDING TO DWG. PL–001
3. PILE DESIGN CRITERIA SPECIFICATIONS ARE ACCORDING TO DWG. PL–001
4. INITIAL PRESTRESSING FORCE NOT INCLUDE SLIP LOSS IN ø9 MM. WIRE STANDS IS 63.20 KN./WIRE
5. BEFORE CUT WIRE STANDS, CONCRETE SHALL HAVE CUBE 15 x 15 x 15 $CM.^3$ COMPRESSIVE STRENGTH NOT LESS THAN OF 35 MPa. (357KG/CM^2)
6. MAXIMUM PAYLOAD AND A LOAD CAPACITY OF PILE ACCORDING TO DWG. PL–001
7. THE PILE WILL BE AVAILABLE WHEN CONCRETE COMPRESSIVE STRENGTH AFTER 28 DAYS NO LESS THAN THE SPECIFIED ACCORDING TO DWG. PL–001
8. THE THICKNESS OF THE CONCRETE COVERING STEEL IS 5.0 CM.
9. REMOVE ALL CORNER CONCRETE IS VISIBLE 2.0 CM. UNLESS OTHERWISE INDICATED.
10. FREE STANDING HEIGHT OF PILE SHALL NOT EXCEED 3.00 M. FOR OTHER SUITABLE FREE STANDING HEIGHT SHALL BE DESIGNED

KINGDOM OF THAILAND
MINISTRY OF TRANSPORT
DEPARTMENT OF HIGHWAYS

STANDARD DRAWING
SPUN PILES
0.60 M. PILE CAPACITY AND REINFORCEMENT DETAILS

DESIGNED : D.O.H. & CONSULTANTS	**CHECKED :** BUREAU OF LOCATION & DESIGN		**DATE :** OCT 2015
SUBMITTED :	(DIRECTOR OF LOCATION & DESIGN BUREAU)		**SCALE :** AS SHOWN
APPROVED :	(FOR DIRECTOR GENERAL)		**DWG NO.** PL–302
			SHEET NO. 314

REF.	REVISION	SIGNATURE	DATE

D:\std dwg 2015\PL-302(REV00)

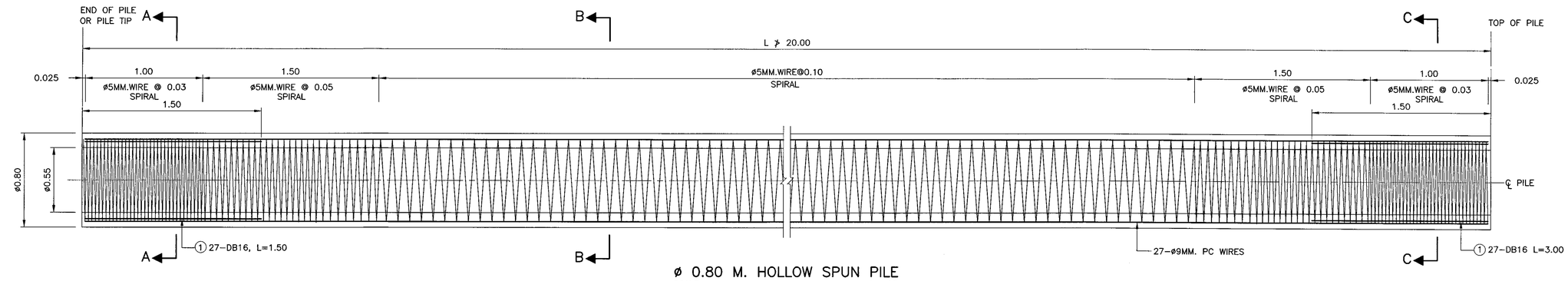

ø 0.80 M. HOLLOW SPUN PILE
SCALE 1 : 25

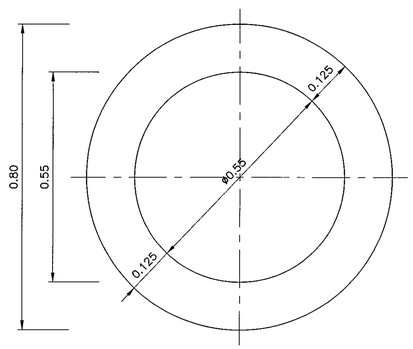

PILE SECTION
SCALE 1 : 10

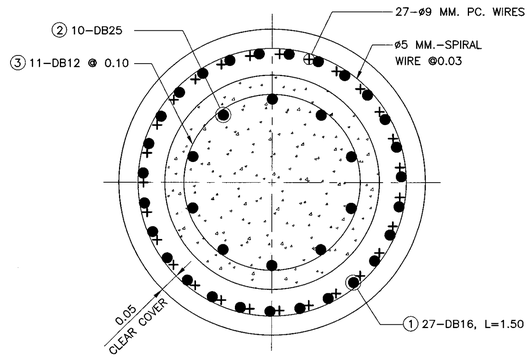

SECTION A – A
SCALE 1 : 10

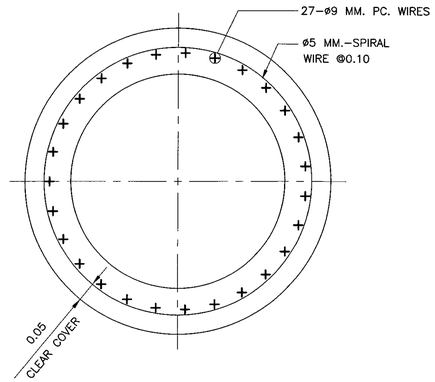

SECTION B – B
SCALE 1 : 10

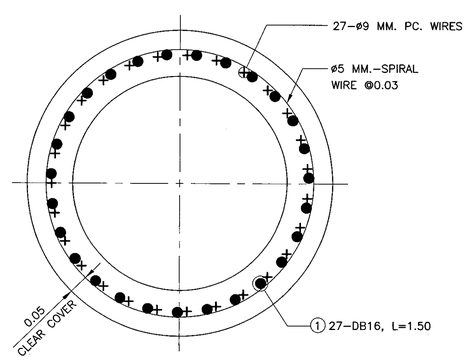

SECTION C – C
SCALE 1 : 10

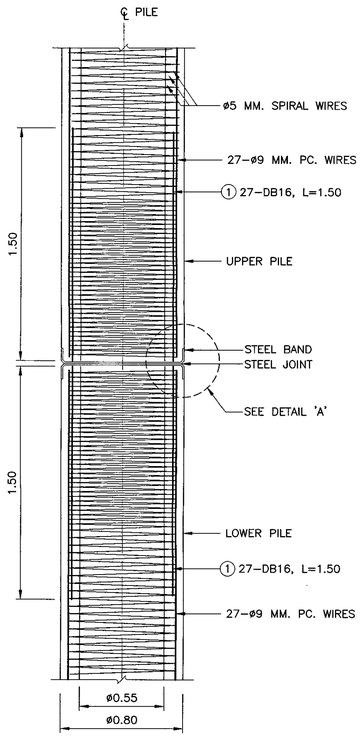

SPLICING JOINT DETAILS
SCALE 1 : 25

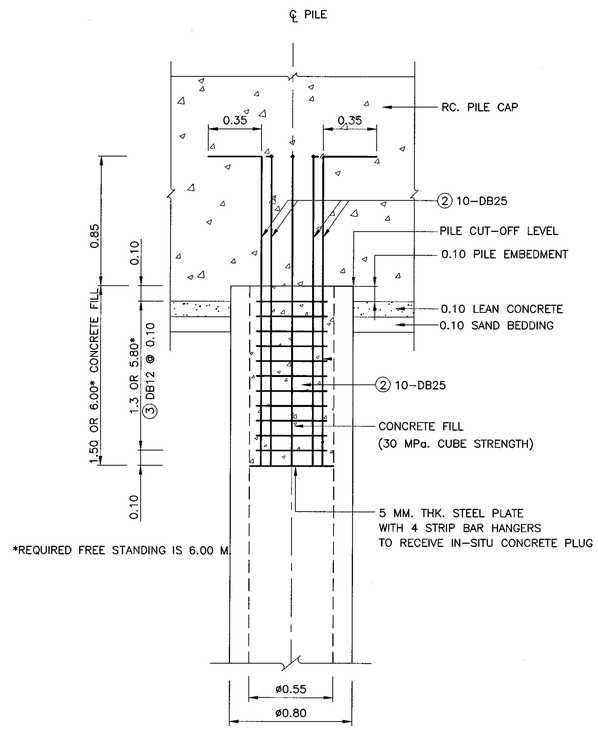

PILE HEAD DETAILS
SCALE 1 : 25

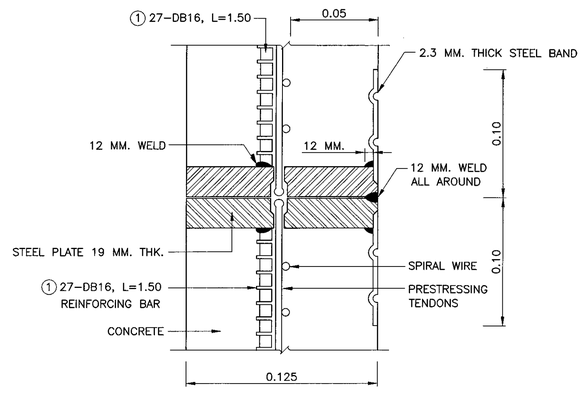

DETAIL "A"
SCALE 1 : 2.5

NOTES :

1. ALL DIMENSIONS SHOWN ARE IN METERS UNLESS OTHERWISE INDICATED.
2. MATERIAL PROPERTIES ARE ACCORDING TO DWG. PL-001
3. PILE DESIGN CRITERIA SPECIFICATIONS ARE ACCORDING TO DWG. PL-001
4. INITIAL PRESTRESSING FORCE NOT INCLUDE SLIP LOSS IN ø9 MM. WIRE STANDS IS 63.20 KN./WIRE
5. BEFORE CUT WIRE STANDS, CONCRETE SHALL HAVE CUBE 15 x 15 x 15 $CM.^3$ COMPRESSIVE STRENGTH NOT LESS THAN OF 35 MPa. (357 KG/CM^2)
6. MAXIMUM PAYLOAD AND A LOAD CAPACITY OF PILE ACCORDING TO DWG. PL-001
7. THE PILE WILL BE AVAILABLE WHEN CONCRETE COMPRESSIVE STRENGTH AFTER 28 DAYS NO LESS THAN THE SPECIFIED ACCORDING TO DWG. PL-001
8. THE THICKNESS OF THE CONCRETE COVERING STEEL IS 5.0 CM.
9. REMOVE ALL CORNER CONCRETE IS VISIBLE 2.0 CM. UNLESS OTHERWISE INDICATED.
10. FREE STANDING HEIGHT OF PILE SHALL NOT EXCEED 3.00 M. FOR OTHER SUITABLE FREE STANDING HEIGHT SHALL BE DESIGNED

KINGDOM OF THAILAND
MINISTRY OF TRANSPORT
DEPARTMENT OF HIGHWAYS

STANDARD DRAWING
SPUN PILES

0.80 M. PILE CAPACITY AND REINFORCEMENT DETAILS

DESIGNED : D.O.H. & CONSULTANTS	**CHECKED :** BUREAU OF LOCATION & DESIGN	**DATE :** OCT 2015
SUBMITTED : (DIRECTOR OF LOCATION & DESIGN BUREAU)		**SCALE :** AS SHOWN
APPROVED : (FOR DIRECTOR GENERAL)		**DWG NO.** PL-303
		SHEET NO. 315

REF.	REVISION	SIGNATURE	DATE

D:\std dwg 2015\PL-303(REV00)

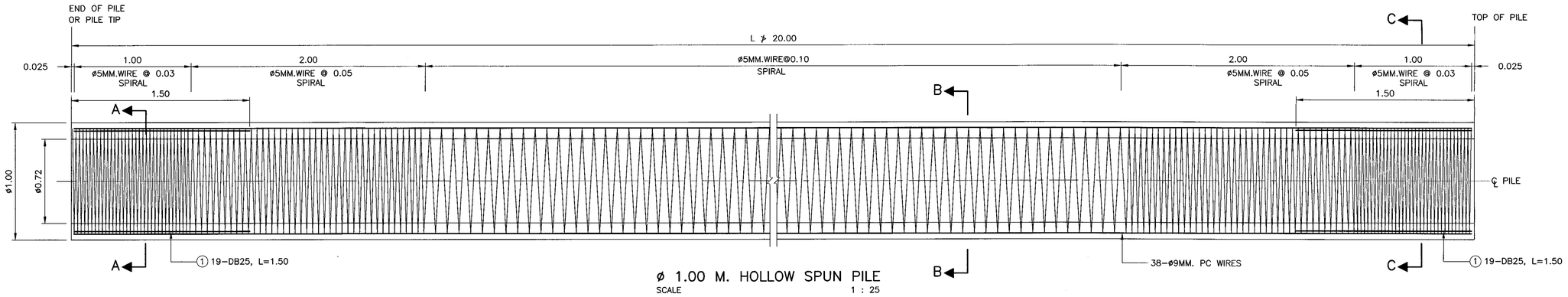

ø 1.00 M. HOLLOW SPUN PILE
SCALE 1 : 25

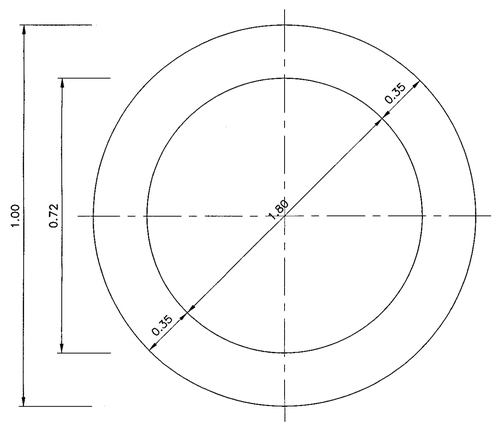

PILE SECTION
SCALE 1 : 10

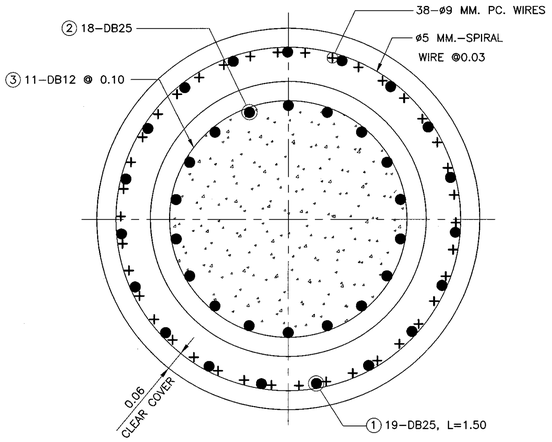

SECTION A – A
SCALE 1 : 10

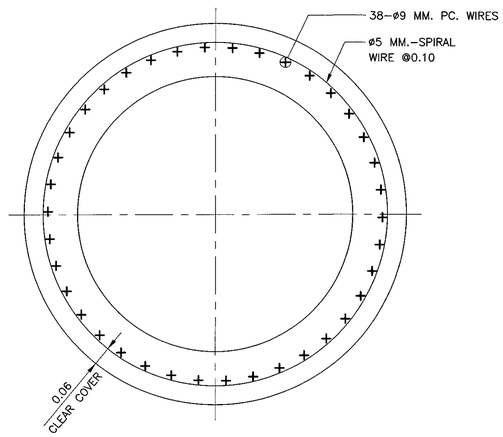

SECTION B – B
SCALE 1 : 10

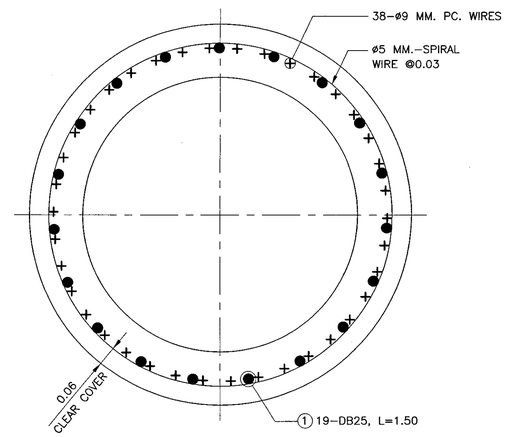

SECTION C – C
SCALE 1 : 10

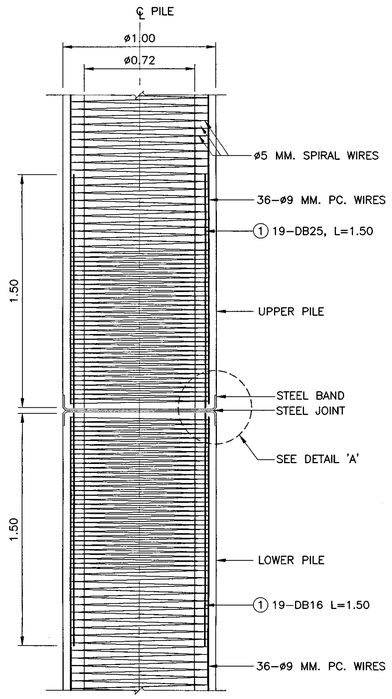

SPLICING JOINT DETAILS
SCALE 1 : 25

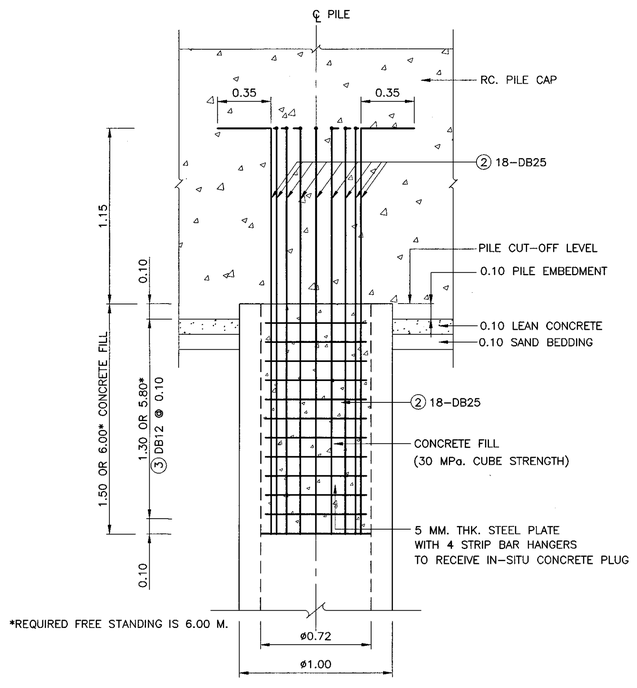

PILE HEAD DETAILS
SCALE 1 : 25

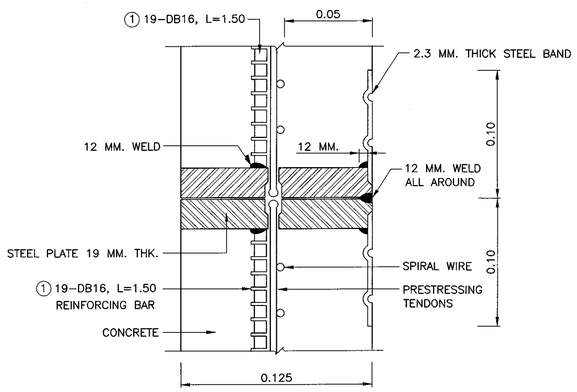

DETAIL "A"
SCALE 1 : 2.5

NOTES :

1. ALL DIMENSIONS SHOWN ARE IN METERS UNLESS OTHERWISE INDICATED.
2. MATERIAL PROPERTIES ARE ACCORDING TO DWG. PL-001
3. PILE DESIGN CRITERIA SPECIFICATIONS ARE ACCORDING TO DWG. PL-001
4. INITIAL PRESTRESSING FORCE NOT INCLUDE SLIP LOSS IN ø9 MM. WIRE STANDS IS 63.20 KN./WIRE
5. BEFORE CUT WIRE STANDS, CONCRETE SHALL HAVE CUBE 15 x 15 x 15 $CM.^3$ COMPRESSIVE STRENGTH NOT LESS THAN OF 35 MPa. (357 KG/CM^2)
6. MAXIMUM PAYLOAD AND A LOAD CAPACITY OF PILE ACCORDING TO DWG. PL-001
7. THE PILE WILL BE AVAILABLE WHEN CONCRETE COMPRESSIVE STRENGTH AFTER 28 DAYS NO LESS THAN THE SPECIFIED ACCORDING TO DWG. PL-001
8. THE THICKNESS OF THE CONCRETE COVERING STEEL IS 5.0 CM.
9. REMOVE ALL CORNER CONCRETE IS VISIBLE 2.0 CM. UNLESS OTHERWISE INDICATED.
10. FREE STANDING HEIGHT OF PILE SHALL NOT EXCEED 3.00 M. FOR OTHER SUITABLE FREE STANDING HEIGHT SHALL BE DESIGNED

KINGDOM OF THAILAND
MINISTRY OF TRANSPORT
DEPARTMENT OF HIGHWAYS

STANDARD DRAWING
SPUN PILES

1.00 M. PILE CAPACITY AND REINFORCEMENT DETAILS

DESIGNED : D.O.H. & CONSULTANTS	CHECKED : BUREAU OF LOCATION & DESIGN		DATE : OCT 2015
SUBMITTED : (DIRECTOR OF LOCATION & DESIGN BUREAU)			SCALE : AS SHOWN
APPROVED : (FOR DIRECTOR GENERAL)			DWG NO. PL-304
			SHEET NO. 316

REF.	REVISION	SIGNATURE	DATE

D:\std dwg 2015\PL-304(REV00)

SECTION 3) REINFORCED CONCRETE BOX CULVERT

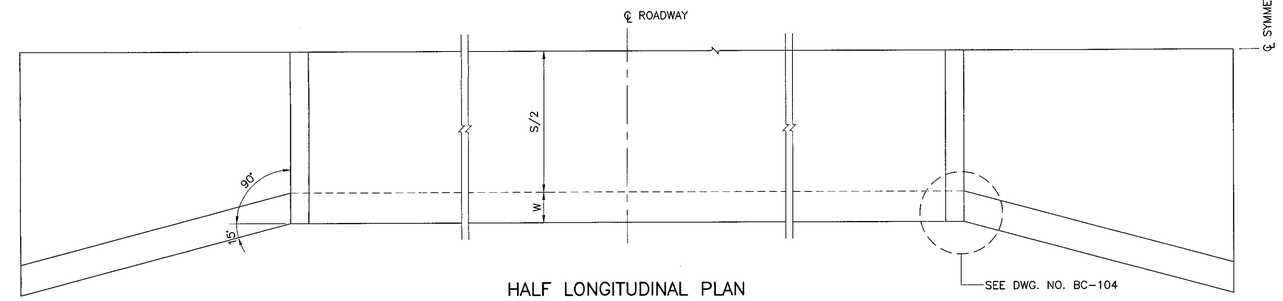

HALF LONGITUDINAL PLAN
SCALE 1 : 25

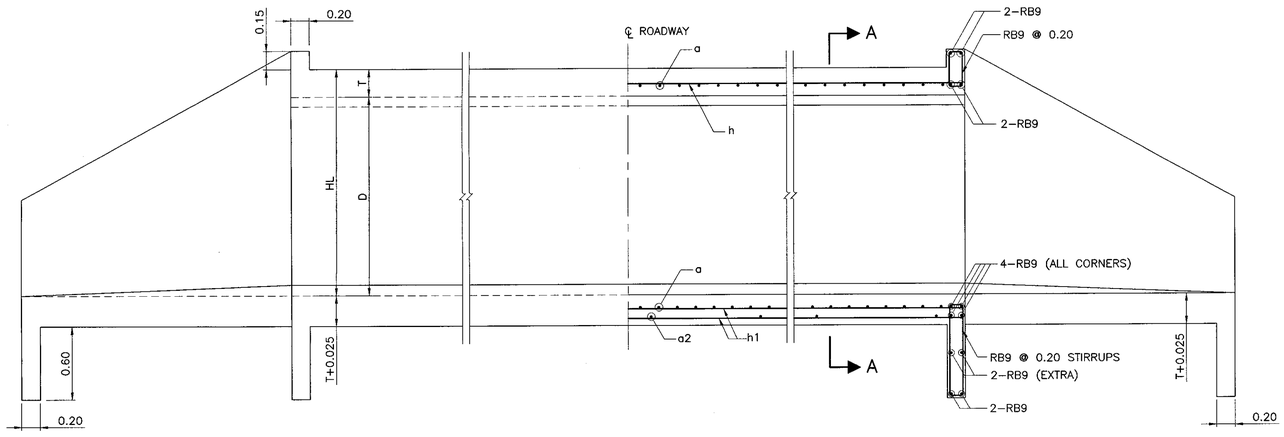

HALF LONGITUDINAL ELEVATION
SCALE 1 : 25

HALF LONGITUDINAL SECTION
SCALE 1 : 25

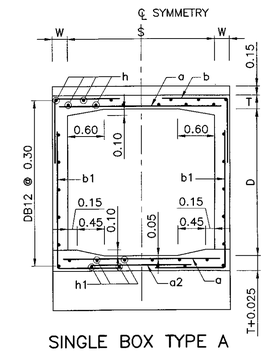

SINGLE BOX TYPE A
(FOR D ⩽ 2.40 M. AND W < 0.30 M.)

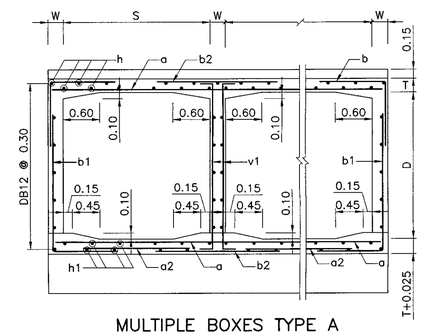

MULTIPLE BOXES TYPE A
(FOR D ⩽ 2.40 M. AND W < 0.30 M.)

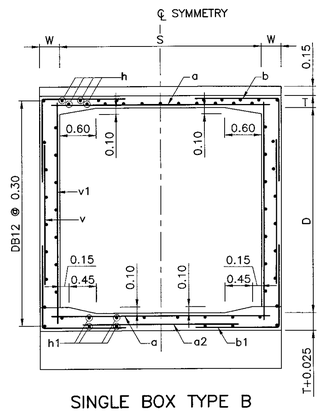

SINGLE BOX TYPE B
(FOR D > 2.40 M.)

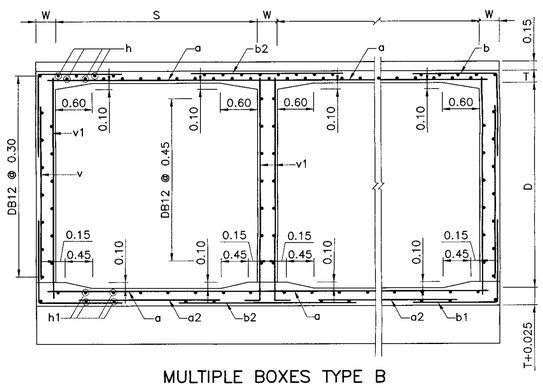

MULTIPLE BOXES TYPE B
(FOR D > 2.40 M.)

SECTION A – A
NOT TO SCALE

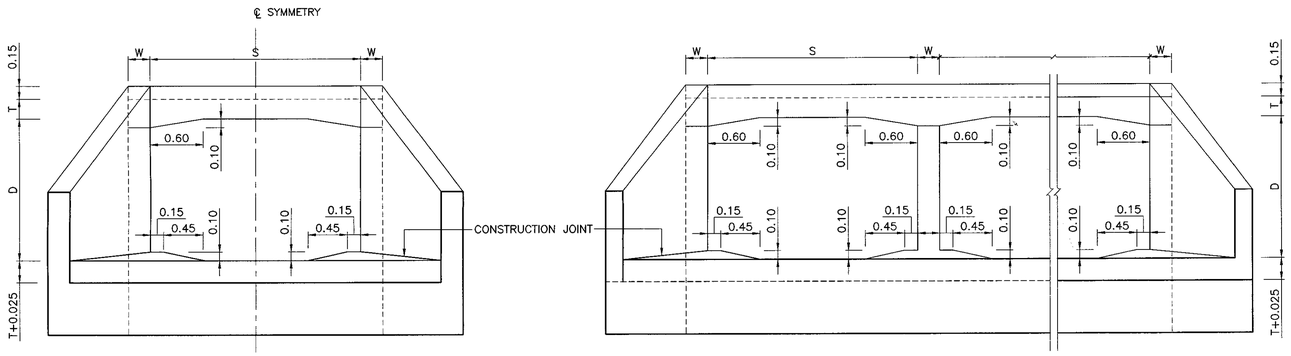

SINGLE BOX MULTIPLE BOXES

TRANSVERSE ELEVATION
NOT TO SCALE

NOTES :

1. ALL DIMENSIONS SHOWN ARE IN METERS UNLESS OTHERWISE INDICATED.
2. DESIGN LIVE LOAD: HL-93.
3. A MINIMUM ULTIMATE COMPRESSIVE STRENGTH FOR A 150x150x150 MM. CUBE AT 28 DAYS AS FOLLOWS:
   - A) FOR RC. BOX CULVERT 30 MPa. (306 KG/CM^2)
   - B) FOR PRECAST BOX CULVERT 40 MPa. (408 KG/CM^2)
   - C) FOR LEAN CONCRETE 20 MPa. (204 KG/CM^2)
4. REINFORCEMENT
   SR24 FOR BAR ø9 MM. AND SMALLER SIZE
   SD40 FOR BAR ø12 MM. AND LARGER SIZE
5. CLEAR CONCRETE COVER SHALL BE 0.05 M. EXCEPT THE BOTTOM OF BOTTOM SLABS OR WALL WHERE CLEAR COVER OF 0.075 M. SHALL BE PROVIDED.
6. THIS DRAWING IS USING IN CONJUNCTION WITH DWG. NO. BC-102 AND BC-104

REF.	REVISION	SIGNATURE	DATE

KINGDOM OF THAILAND

MINISTRY OF TRANSPORT
DEPARTMENT OF HIGHWAYS

STANDARD DRAWING
CAST-IN-SITU BOX CULVERT
RIGID FRAME R.C. BOX CULVERT
PLAN ELEVATION AND SECTIONS

DESIGNED : D.O.H. & CONSULTANTS	CHECKED : BUREAU OF LOCATION & DESIGN	DATE : OCT 2015
SUBMITTED : (DIRECTOR OF LOCATION & DESIGN BUREAU)		SCALE : AS SHOWN
APPROVED : (FOR DIRECTOR GENERAL)		DWG NO. BC-101
		SHEET NO. 317

D:\std dwg 2015\BC-101(REV00)

S	D	FILL HEIGHT	T	W	BAR MARK a			BAR MARK a2			BAR MARK b & b1			BAR MARK b			BAR MARK b1			BAR MARK h			BAR MARK h1			BAR MARK v			BAR MARK v1			BAR MARK b2		
					DB	@	L	DB	@	L	DB	@	F	G	L	G1	L	DB	@	NO.	DB	@	NO.	DB	@	L	DB	@	L	DB	@	L
CLEAR SPAN	1.80	0.00–0.30	0.240	0.25	16	0.140	2.70	12	0.30	1.95	12	0.165	1.000	1.000	2.20	1.800	3.00	12	0.30	20	12	0.30	15	–	–	–	12	0.30	2.35	12	0.165	2.00
		0.31–0.60	0.215	0.25	16	0.165	2.70	12	0.30	1.95	12	0.165	1.000	1.000	2.20	1.800	3.00	12	0.30	20	12	0.30	15	–	–	–	12	0.30	2.35	12	0.165	2.00
		0.61–1.50	0.200	0.25	16	0.200	2.70	12	0.30	1.95	12	0.15	1.000	1.000	2.20	1.800	3.00	12	0.30	20	12	0.30	15	–	–	–	12	0.30	2.35	12	0.150	2.00
		1.51–2.25	0.200	0.25	16	0.175	2.70	12	0.30	1.95	12	0.125	1.000	1.000	2.20	1.800	3.00	12	0.30	20	12	0.30	15	–	–	–	12	0.30	2.35	12	0.125	2.00
		2.26–3.00	0.215	0.25	16	0.165	2.70	12	0.30	1.95	12	0.125	1.000	1.000	2.20	1.800	3.00	12	0.30	20	12	0.30	15	–	–	–	12	0.30	2.35	12	0.125	2.00
		3.01–3.75	0.225	0.25	16	0.140	2.70	12	0.30	1.95	12	0.115	1.000	1.000	2.20	1.800	3.00	12	0.30	20	12	0.30	15	–	–	–	12	0.30	2.35	12	0.115	2.00
		3.76–4.50	0.240	0.25	20	0.175	2.75	12	0.30	1.95	12	0.110	1.000	1.025	2.25	1.825	3.05	12	0.30	20	16	0.30	15	–	–	–	12	0.30	2.35	16	0.125	2.00
		4.51–6.00	0.275	0.25	20	0.150	2.75	12	0.30	1.95	16	0.125	1.025	1.025	2.25	1.825	3.05	12	0.30	20	16	0.30	15	–	–	–	12	0.30	2.35	16	0.125	2.00
		6.01–7.50	0.310	0.25	20	0.130	2.75	12	0.30	1.95	16	0.125	1.025	1.025	2.25	1.825	3.05	12	0.30	20	20	0.30	15	–	–	–	12	0.30	2.35	16	0.125	2.00
		7.51–9.00	0.360	0.25	20	0.130	2.75	12	0.30	1.95	16	0.125	1.025	1.025	2.25	1.825	3.05	12	0.30	20	20	0.30	15	–	–	–	12	0.30	2.35	16	0.125	2.00
		9.01–10.50	0.390	0.25	20	0.120	2.75	12	0.30	1.95	16	0.125	1.025	1.025	2.25	1.825	3.05	12	0.30	20	20	0.30	15	–	–	–	12	0.30	2.35	16	0.120	2.00
		10.51–12.00	0.420	0.25	20	0.100	2.75	12	0.30	1.95	16	0.125	1.025	1.025	2.25	1.825	3.05	12	0.30	20	20	0.30	15	–	–	–	12	0.30	2.35	16	0.120	2.00
		12.01–15.00	0.460	0.25	25	0.165	2.75	12	0.30	1.95	16	0.125	1.025	1.025	2.25	1.825	3.05	12	0.30	20	20	0.30	15	–	–	–	12	0.30	2.35	16	0.120	2.00
							✳													✳			✳				⊛	⊛	⊛	⊛	⊛	⊛
	2.10	0.00–0.30	0.240	0.25	16	0.140	2.70	12	0.30	1.95	12	0.165	1.000	1.000	2.20	2.100	3.30	12	0.25	24	12	0.30	15	–	–	–	12	0.30	2.65	12	0.165	2.00
		0.31–0.60	0.215	0.25	16	0.165	2.70	12	0.30	1.95	12	0.165	1.000	1.000	2.20	2.100	3.30	12	0.30	20	12	0.30	15	–	–	–	12	0.30	2.65	12	0.165	2.00
		0.61–1.50	0.200	0.25	16	0.200	2.70	12	0.30	1.95	12	0.15	1.000	1.000	2.20	2.100	3.30	12	0.30	20	12	0.30	15	–	–	–	12	0.30	2.65	12	0.150	2.00
		1.51–2.25	0.200	0.25	16	0.175	2.70	12	0.30	1.95	12	0.125	1.000	1.000	2.20	2.100	3.30	12	0.30	20	12	0.30	15	–	–	–	12	0.30	2.65	12	0.125	2.00
		2.26–3.00	0.215	0.25	16	0.165	2.70	12	0.30	1.95	12	0.125	1.000	1.000	2.20	2.100	3.30	12	0.30	20	12	0.30	15	–	–	–	12	0.30	2.65	12	0.125	2.00
		3.01–3.75	0.225	0.25	16	0.140	2.70	12	0.30	1.95	12	0.115	1.000	1.000	2.20	2.100	3.30	12	0.30	20	12	0.30	15	–	–	–	12	0.30	2.65	12	0.115	2.00
		3.76–4.50	0.240	0.25	20	0.175	2.75	12	0.30	1.95	12	0.115	1.000	1.000	2.20	2.100	3.30	12	0.30	20	16	0.30	15	–	–	–	12	0.30	2.65	12	0.115	2.00
		4.51–6.00	0.275	0.25	20	0.150	2.75	12	0.30	1.95	16	0.125	1.025	1.025	2.25	2.125	3.35	12	0.30	20	16	0.30	15	–	–	–	12	0.30	2.65	16	0.125	2.00
		6.01–7.50	0.310	0.25	20	0.140	2.75	12	0.30	1.95	16	0.125	1.025	1.025	2.25	2.125	3.35	12	0.30	20	20	0.30	15	–	–	–	12	0.30	2.65	16	0.125	2.00
		7.51–9.00	0.360	0.25	20	0.130	2.75	12	0.30	1.95	16	0.125	1.025	1.025	2.25	2.125	3.35	12	0.30	20	20	0.30	15	–	–	–	12	0.30	2.65	16	0.125	2.00
		9.01–10.50	0.390	0.25	20	0.120	2.75	12	0.30	1.95	16	0.125	1.025	1.025	2.25	2.125	3.35	12	0.30	20	20	0.30	15	–	–	–	12	0.30	2.65	16	0.120	2.00
		10.51–12.00	0.420	0.25	20	0.100	2.75	12	0.30	1.95	16	0.125	1.025	1.025	2.25	2.125	3.35	12	0.30	20	20	0.30	15	–	–	–	12	0.30	2.65	16	0.120	2.00
		12.01–15.00	0.460	0.25	25	0.165	2.75	12	0.30	1.95	16	0.125	1.025	1.025	2.25	2.125	3.35	12	0.30	20	25	0.30	15	–	–	–	12	0.30	2.65	16	0.120	2.00
							✳													✳			✳				⊛	⊛	⊛	⊛	⊛	⊛
CLEAR SPAN	2.10	0.00–0.30	0.240	0.25	16	0.125	3.00	12	0.30	2.25	12	0.175	1.100	1.100	2.40	2.100	3.40	12	0.23	28	12	0.30	17	–	–	–	12	0.30	2.65	12	0.175	2.20
		0.31–0.60	0.225	0.25	16	0.150	3.00	12	0.30	2.25	12	0.175	1.100	1.100	2.40	2.100	3.40	12	0.25	26	12	0.30	17	–	–	–	12	0.30	2.65	12	0.175	2.20
		0.61–1.50	0.225	0.25	16	0.175	3.00	12	0.30	2.25	12	0.165	1.100	1.100	2.40	2.100	3.40	12	0.30	22	12	0.30	17	–	–	–	12	0.30	2.65	12	0.165	2.20
		1.51–2.25	0.225	0.25	16	0.150	3.00	12	0.30	2.25	12	0.140	1.100	1.100	2.40	2.100	3.40	12	0.30	22	12	0.30	17	–	–	–	12	0.30	2.65	12	0.140	2.20
		2.26–3.00	0.225	0.25	20	0.190	3.05	12	0.30	2.25	12	0.125	1.100	1.100	2.40	2.100	3.40	12	0.30	22	12	0.30	17	–	–	–	12	0.30	2.65	12	0.125	2.20
		3.01–3.75	0.250	0.25	20	0.165	3.05	12	0.30	2.25	12	0.125	1.100	1.100	2.40	2.100	3.40	12	0.30	22	12	0.30	17	–	–	–	12	0.30	2.65	12	0.125	2.20
		3.76–4.50	0.260	0.25	20	0.150	3.05	12	0.30	2.25	12	0.110	1.100	1.100	2.40	2.100	3.40	12	0.30	22	12	0.30	17	–	–	–	12	0.30	2.65	12	0.110	2.20
		4.51–6.00	0.300	0.25	20	0.125	3.05	12	0.30	2.25	16	0.125	1.125	1.125	2.45	2.125	3.45	12	0.30	22	16	0.30	17	–	–	–	12	0.30	2.65	16	0.125	2.20
		6.01–7.50	0.340	0.25	20	0.110	3.05	12	0.30	2.25	16	0.125	1.125	1.125	2.45	2.125	3.45	12	0.30	22	20	0.30	17	–	–	–	12	0.30	2.65	16	0.125	2.20
		7.51–9.00	0.380	0.25	20	0.100	3.05	12	0.30	2.25	16	0.125	1.125	1.125	2.45	2.125	3.45	12	0.30	22	20	0.30	17	–	–	–	12	0.30	2.65	16	0.125	2.20
		9.01–10.50	0.430	0.25	25	0.170	3.05	12	0.30	2.25	16	0.125	1.125	1.125	2.45	2.125	3.45	12	0.30	22	20	0.30	17	–	–	–	12	0.30	2.65	16	0.120	2.20
		10.51–12.00	0.460	0.25	25	0.150	3.05	12	0.30	2.25	16	0.125	1.125	1.125	2.45	2.125	3.45	12	0.30	22	25	0.30	17	–	–	–	12	0.30	2.65	16	0.120	2.20
		12.01–15.00	0.520	0.25	25	0.130	3.05	12	0.30	2.25	16	0.125	1.125	1.125	2.45	2.125	3.45	12	0.30	22	25	0.30	17	–	–	–	12	0.30	2.65	16	0.120	2.20
							✳													✳			✳				⊛	⊛	⊛	⊛	⊛	⊛
	2.40	0.00–0.30	0.240	0.25	16	0.125	3.00	12	0.30	2.25	12	0.165	1.100	1.100	2.40	2.400	3.70	12	0.23	28	12	0.30	17	–	–	–	12	0.30	2.95	12	0.165	2.20
		0.31–0.60	0.225	0.25	16	0.150	3.00	12	0.30	2.25	12	0.165	1.100	1.100	2.40	2.400	3.70	12	0.25	26	12	0.30	17	–	–	–	12	0.30	2.95	12	0.165	2.20
		0.61–1.50	0.225	0.25	16	0.175	3.00	12	0.30	2.25	12	0.150	1.100	1.100	2.40	2.400	3.70	12	0.30	22	12	0.30	17	–	–	–	12	0.30	2.95	12	0.150	2.20
		1.51–2.25	0.225	0.25	16	0.150	3.00	12	0.30	2.25	12	0.125	1.100	1.100	2.40	2.400	3.70	12	0.30	22	12	0.30	17	–	–	–	12	0.30	2.95	12	0.125	2.20
		2.26–3.00	0.225	0.25	20	0.200	3.05	12	0.30	2.25	12	0.125	1.100	1.100	2.40	2.400	3.70	12	0.30	22	12	0.30	17	–	–	–	12	0.30	2.95	12	0.125	2.20
		3.01–3.75	0.250	0.25	20	0.175	3.05	12	0.30	2.25	12	0.125	1.100	1.100	2.40	2.400	3.70	12	0.30	22	12	0.30	17	–	–	–	12	0.30	2.95	12	0.125	2.20
		3.76–4.50	0.260	0.25	20	0.150	3.05	12	0.30	2.25	12	0.110	1.100	1.100	2.40	2.400	3.70	12	0.30	22	16	0.30	17	–	–	–	12	0.30	2.95	12	0.110	2.20
		4.51–6.00	0.300	0.25	20	0.125	3.05	12	0.30	2.25	16	0.125	1.125	1.125	2.45	2.425	3.75	12	0.30	22	16	0.30	17	–	–	–	12	0.30	2.95	16	0.125	2.20
		6.01–7.50	0.340	0.25	20	0.110	3.05	12	0.30	2.25	16	0.125	1.125	1.125	2.45	2.425	3.75	12	0.30	22	20	0.30	17	–	–	–	12	0.30	2.95	16	0.125	2.20
		7.51–9.00	0.380	0.25	20	0.100	3.05	12	0.30	2.25	16	0.125	1.125	1.125	2.45	2.425	3.75	12	0.30	22	20	0.30	17	–	–	–	12	0.30	2.95	16	0.125	2.20
		9.01–10.50	0.430	0.25	25	0.170	3.05	12	0.30	2.25	16	0.125	1.125	1.125	2.45	2.425	3.75	12	0.30	22	20	0.30	17	–	–	–	12	0.30	2.95	16	0.120	2.20
		10.51–12.00	0.460	0.25	25	0.150	3.05	12	0.30	2.25	16	0.125	1.125	1.125	2.45	2.425	3.75	12	0.30	22	25	0.30	17	–	–	–	12	0.30	2.95	16	0.120	2.20
		12.01–15.00	0.520	0.25	25	0.130	3.05	12	0.30	2.25	16	0.125	1.125	1.125	2.45	2.425	3.75	12	0.30	22	25	0.30	17	–	–	–	12	0.30	2.95	16	0.120	2.20
							✳													✳			✳				⊛	⊛	⊛	⊛	⊛	⊛
CLEAR SPAN	2.40	0.00–0.30	0.240	0.250	20	0.190	3.35	12	0.30	2.45	12	0.150	1.200	1.200	2.60	2.400	3.80	12	0.23	30	12	0.30	19	–	–	–	12	0.30	2.95	12	0.150	2.40
		0.31–0.60	0.240	0.250	20	0.200	3.35	12	0.30	2.45	12	0.150	1.200	1.200	2.60	2.400	3.80	12	0.25	28	12	0.30	19	–	–	–	12	0.30	2.95	12	0.150	2.40
		0.61–1.50	0.240	0.250	20	0.225	3.35	12	0.30	2.45	12	0.140	1.200	1.200	2.60	2.400	3.80	12	0.30	24	12	0.30	19	–	–	–	12	0.30	2.95	12	0.140	2.40
		1.51–2.25	0.240	0.250	20	0.175	3.35	12	0.30	2.45	12	0.125	1.200	1.200	2.60	2.400	3.80	12	0.30	24	12	0.30	19	–	–	–	12	0.30	2.95	12	0.125	2.40
		2.26–3.00	0.250	0.250	20	0.165	3.35	12	0.30	2.45	12	0.125	1.200	1.200	2.60	2.400	3.80	12	0.30	24	12	0.30	19	–	–	–	12	0.30	2.95	12	0.125	2.40
		3.01–3.75	0.275	0.250	20	0.150	3.35	12	0.30	2.45	12	0.125	1.200	1.200	2.60	2.400	3.80	12	0.30	24	12	0.30	19	–	–	–	12	0.30	2.95	12	0.125	2.40
		3.76–4.50	0.300	0.250	20	0.125	3.35	12	0.30	2.45	12	0.110	1.200	1.200	2.60	2.400	3.80	12	0.30	24	16	0.30	19	–	–	–	12	0.30	2.95	12	0.110	2.40
		4.51–6.00	0.325	0.250	20	0.100	3.35	12	0.30	2.45	16	0.125	1.225	1.225	2.65	2.425	3.85	12	0.30	24	16	0.30	19	–	–	–	12	0.30	2.95	16	0.125	2.40
		6.01–7.50	0.375	0.250	25	0.175	3.40	12	0.30	2.45	16	0.125	1.225	1.225	2.65	2.425	3.85	12	0.30	24	20	0.30	19	–	–	–	12	0.30	2.95	16	0.125	2.40
		7.51–9.00	0.430	0.275	25	0.165	3.40	12	0.30	2.45	16	0.125	1.225	1.225	2.65	2.425	3.85	12	0.30	24	20	0.30	19	–	–	–	12	0.30	2.95	16	0.120	2.40
		9.01–10.50	0.490	0.275	25	0.155	3.40	12	0.30	2.45	16	0.125	1.225	1.225	2.65	2.425	3.85	12	0.30	24	25	0.30	19	–	–	–	12	0.30	2.95	16	0.120	2.40
		10.51–12.00	0.510	0.275	25	0.140	3.40	12	0.30	2.45	16	0.125	1.225	1.225	2.65	2.425	3.85	12	0.30	24	25	0.30	19	–	–	–	12	0.30	2.95	16	0.120	2.40
		12.01–15.00	0.570	0.275	25	0.120	3.40	12	0.30	2.45	16	0.125	1.225	1.225	2.65	2.425	3.85	12	0.30	24	25	0.30	19	–	–	–	12	0.30	2.95	16	0.120	2.40
							✳													✳			✳				⊛	⊛	⊛	⊛	⊛	⊛
	2.70	0.00–0.30	0.240	0.275	20	0.190	3.35	12	0.30	2.45	12	0.150	1.200	1.200	2.60	1.200	2.60	12	0.23	32	12	0.30	19	12	0.30	2.60	12	0.30	3.25	12	0.150	2.40
		0.31–0.60	0.240	0.275	20	0.200	3.35	12	0.30	2.45	12	0.150	1.200	1.200	2.60	1.200	2.60	12	0.25	28	12	0.30	19	12	0.30	2.60	12	0.30	3.25	12	0.150	2.40
		0.61–1.50	0.240	0.275	20	0.225	3.35	12	0.30	2.45	12	0.150	1.200	1.200	2.60	1.200	2.60	12	0.30	24	12	0.30	19	12	0.30	2.60	12	0.30	3.25	12	0.150	2.40
		1.51–2.25	0.240	0.275	20	0.190	3.35	12	0.30	2.45	12	0.150	1.225	1.225	2.65	1.225	2.65	12	0.30	24	12	0.30	19	12	0.30	2.60	12	0.30	3.25	12	0.150	2.40
		2.26–3.00	0.240	0.275	20	0.175	3.35	12	0.30	2.45	12	0.150	1.225	1.225	2.65	1.225	2.65	12	0.30	24	12	0.30	19	12	0.30	2.60	12	0.30	3.25	12	0.150	2.40
		3.01–3.75	0.265	0.275	20	0.150	3.35	12	0.30	2.45	12	0.150	1.225	1.225	2.65	1.225	2.65	12	0.30	24	12	0.30	19	12	0.30	2.60	12	0.30	3.25	12	0.150	2.40
		3.76–4.50	0.290	0.275	20	0.140	3.35	12	0.30	2.45	16	0.140	1.225	1.225	2.65	1.225	2.65	12	0.30	24	16	0.30	19	12	0.28	2.60	12	0.30	3.25	16	0.140	2.40
		4.51–6.00	0.325	0.275	20	0.110	3.35	12	0.30	2.45	16	0.125	1.225	1.225	2.65	1.225	2.65	12	0.30	24	16	0.30	19	12	0.25	2.60	12	0.30	3.25	16	0.125	2.40
		6.01–7.50	0.375	0.275	25	0.180	3.40	12	0.30	2.45	16	0.125	1.225	1.225	2.65	1.225	2.65	12	0.30	24	20	0.30	19	12	0.25	2.60	12	0.30	3.25	16	0.125	2.40
		7.51–9.00	0.430	0.275	25	0.175	3.40	12	0.30	2.45	16	0.125	1.225	1.225	2.65	1.225	2.65	12	0.30	24	20	0.30	19	12	0.25	2.60	12	0.30	3.25	16	0.120	2.40
		9.01–10.50	0.490	0.275	25	0.155	3.40	12	0.30	2.45	16	0.125	1.225	1.225	2.65	1.225	2.65	12	0.30	24	25	0.30	19	12	0.25	2.60	12	0.30	3.25	16	0.120	2.40
		10.51–12.00	0.510	0.275	25	0.140	3.40	12	0.30	2.45	16	0.125	1.225	1.225	2.65	1.225	2.65	12	0.30	24	25	0.30	19	12	0.25	2.60	12	0.30	3.25	16	0.120	2.40
		12.01–15.00	0.570	0.275	25	0.120	3.40	12	0.30	2.45	16	0.125	1.225	1.225	2.65	1.225	2.65	12	0.30	24	25	0.30	19	12	0.25	2.60	12	0.30	3.25	16	0.120	2.40
							✳													✳			✳				⊛	⊛	⊛	⊛	⊛	⊛

S	D	FILL HEIGHT	T	W	BAR MARK a			BAR MARK a2			BAR MARK b & b1			BAR MARK b			BAR MARK b1			BAR MARK h			BAR MARK h1			BAR MARK v			BAR MARK v1			BAR MARK b2		
					DB	@	L	DB	@	L	DB	@	F	G	L	G1	L	DB	@	NO.	DB	@	NO.	DB	@	L	DB	@	L	DB	@	L
CLEAR SPAN	2.70	0.00–0.30	0.250	0.275	20	0.175	3.65	12	0.30	2.65	12	0.150	1.300	1.300	2.80	1.300	2.80	12	0.215	36	12	0.30	21	12	0.30	2.60	12	0.30	3.25	12	0.150	2.65
		0.31–0.60	0.250	0.275	20	0.190	3.65	12	0.30	2.65	12	0.150	1.300	1.300	2.80	1.300	2.80	12	0.225	34	12	0.30	21	12	0.30	2.60	12	0.30	3.25	12	0.150	2.65
		0.61–1.50	0.250	0.275	20	0.190	3.65	12	0.30	2.65	16	0.150	1.325	1.325	2.85	1.325	2.85	12	0.300	26	12	0.30	21	12	0.30	2.60	12	0.30	3.25	16	0.150	2.65
		1.51–2.25	0.250	0.275	20	0.165	3.65	12	0.30	2.65	16	0.150	1.325	1.325	2.85	1.325	2.85	12	0.300	26	12	0.30	21	12	0.30	2.60	12	0.30	3.25	16	0.150	2.65
		2.26–3.00	0.265	0.275	20	0.150	3.65	12	0.30	2.65	16	0.150	1.325	1.325	2.85	1.325	2.85	12	0.300	26	12	0.30	21	12	0.30	2.60	12	0.30	3.25	16	0.150	2.65
		3.01–3.75	0.290	0.275	20	0.130	3.70	12	0.30	2.65	16	0.150	1.325	1.325	2.85	1.325	2.85	12	0.300	26	12	0.30	21	12	0.30	2.60	12	0.30	3.25	16	0.150	2.65
		3.76–4.50	0.310	0.275	20	0.110	3.70	12	0.30	2.65	16	0.140	1.325	1.325	2.85	1.325	2.85	12	0.300	26	16	0.30	21	12	0.28	2.60	12	0.30	3.25	16	0.140	2.65
		4.51–6.00	0.350	0.275	25	0.175	3.75	12	0.30	2.65	16	0.125	1.325	1.325	2.85	1.325	2.85	12	0.300	26	16	0.30	21	12	0.25	2.60	12	0.30	3.25	16	0.125	2.65
		6.01–7.50	0.410	0.275	25	0.155	3.75	12	0.30	2.65	16	0.125	1.325	1.325	2.85	1.325	2.85	12	0.300	26	20	0.30	21	12	0.25	2.60	12	0.30	3.25	16	0.125	2.65
		7.51–9.00	0.475	0.275	25	0.155	3.75	12	0.30	2.65	16	0.125	1.325	1.325	2.85	1.325	2.85	12	0.300	26	20	0.30	21	12	0.25	2.60	12	0.30	3.25	16	0.125	2.65
		9.01–10.50	0.530	0.275	25	0.140	3.75	12	0.30	2.65	16	0.110	1.325	1.325	2.85	1.325	2.85	12	0.300	26	20	0.30	21	12	0.25	2.60	12	0.30	3.25	16	0.120	2.65
		10.51–12.00	0.560	0.275	25	0.130	3.75	12	0.30	2

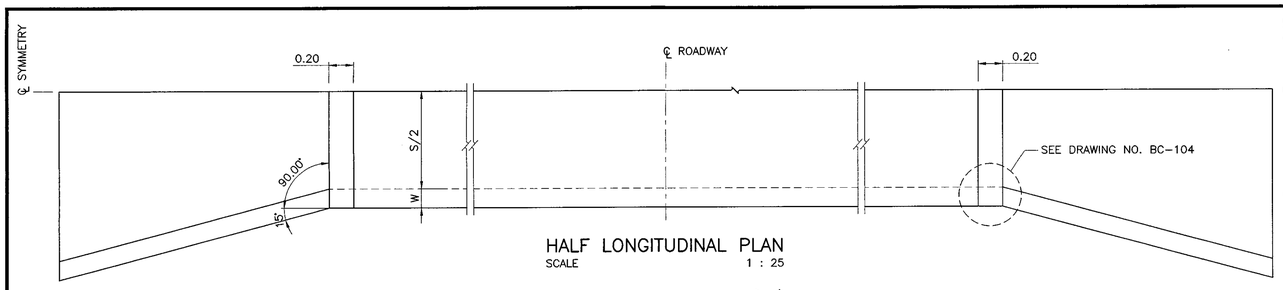

HALF LONGITUDINAL PLAN
SCALE 1 : 25

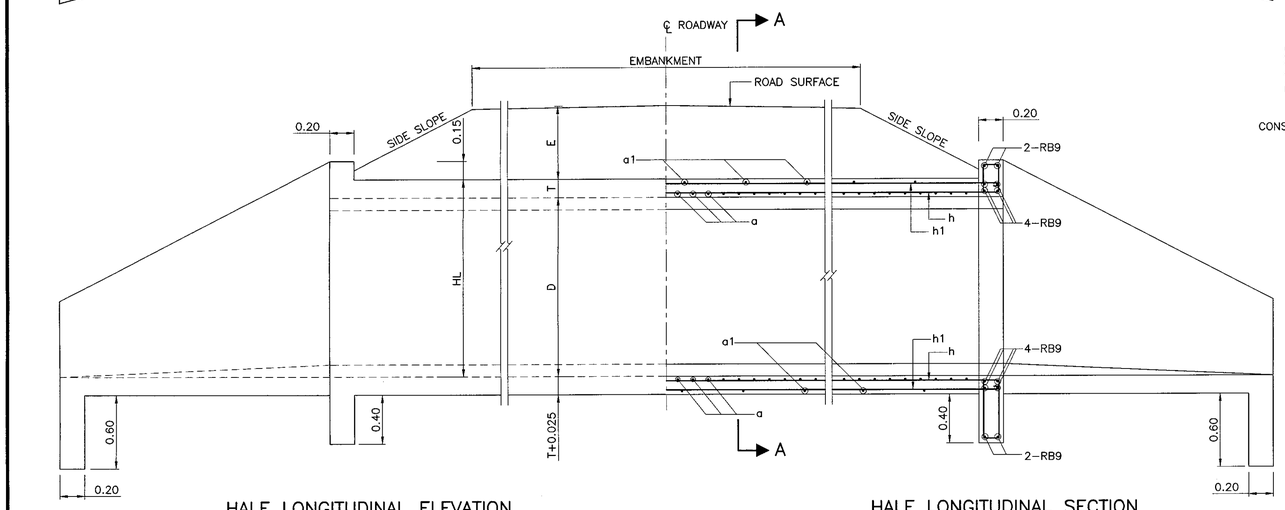

HALF LONGITUDINAL ELEVATION
SCALE 1 : 25

HALF LONGITUDINAL SECTION
SCALE 1 : 25

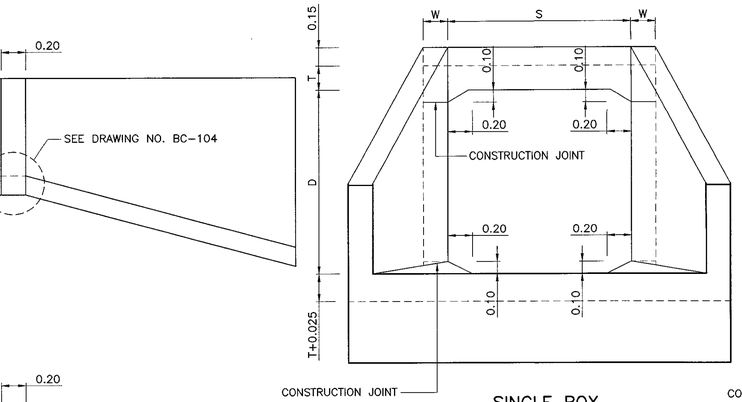

SINGLE BOX

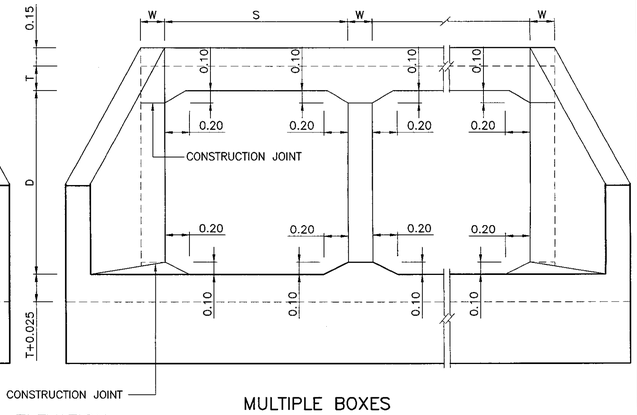

MULTIPLE BOXES

ELEVATION
SCALE 1 : 25

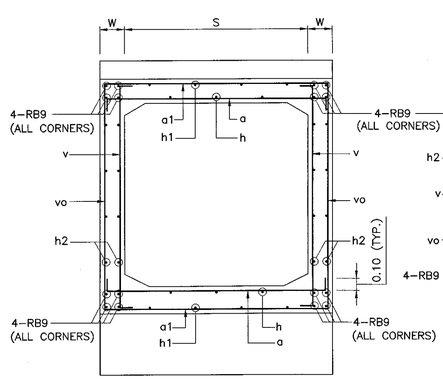

SINGLE BOX

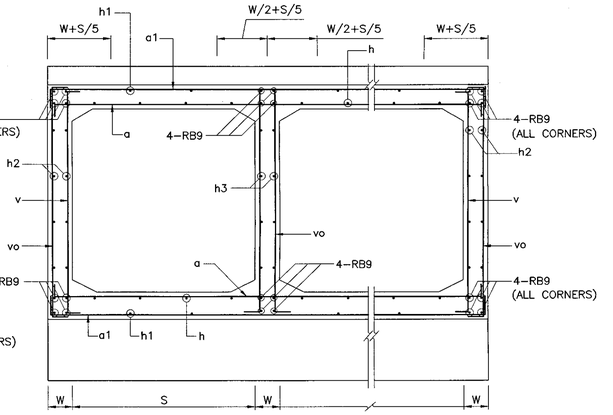

SECTION A – A
SCALE 1 : 25

MULTIPLE BOXES

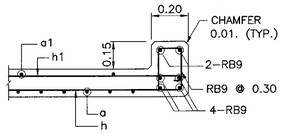

TOP BEAM

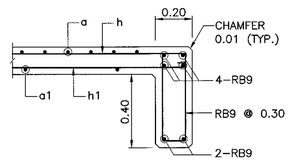

BOTTOM BEAM

END BEAM DETAILS
NOT TO SCALE

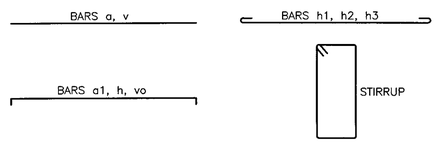

BAR BENDING DIAGRAMS
NOT TO SCALE

TABLE OF TOP AND BOTTOM SLAB REINFORCEMENTS

CLEAR SPAN	DEPTH OF FILL, E	T	SINGLE BOX CULVERT												MULTIPLE BOX CULVERT							
			a			a1			h			h1			a		a1		h		h1	
			DB	@	L	RB	@	L	DB	@	NO.	RB	@	NO.	DB	@	DB,RB	@	DB	@	RB	@
0.60 M.	0.00 – 0.30	0.20	16	0.16	1.13	9	0.45	1.13	12	0.30	8	9	0.45	6	16	0.15	12	0.15	12	0.30	9	0.45
	0.31 – 0.60	0.20	12	0.22	1.13	9	0.60	1.13	12	0.30	8	9	0.45	6	12	0.20	9	0.17	12	0.30	9	0.45
	0.61 – 1.50	0.20	12	0.22	1.13	9	0.60	1.13	12	0.30	8	9	0.45	6	12	0.20	9	0.17	12	0.30	9	0.45
	1.51 – 2.25	0.20	12	0.22	1.13	9	0.60	1.13	12	0.30	8	9	0.45	6	12	0.20	9	0.17	12	0.30	9	0.45
0.90 M.	0.00 – 0.30	0.225	16	0.15	1.43	9	0.45	1.43	12	0.25	12	9	0.40	8	16	0.15	12	0.12	12	0.25	9	0.40
	0.31 – 0.60	0.20	12	0.15	1.43	9	0.60	1.43	12	0.40	8	9	0.40	8	12	0.15	12	0.22	12	0.40	9	0.40
	0.61 – 1.50	0.20	12	0.22	1.43	9	0.60	1.43	12	0.40	8	9	0.40	8	12	0.20	9	0.17	12	0.40	9	0.40
	1.51 – 2.25	0.20	12	0.22	1.43	9	0.60	1.43	12	0.40	8	9	0.40	8	12	0.20	9	0.17	12	0.40	9	0.40
1.20 M.	0.00 – 0.30	0.225	16	0.13	1.73	9	0.45	1.73	12	0.25	14	9	0.36	10	20	0.20	16	0.20	12	0.25	9	0.40
	0.31 – 0.60	0.20	16	0.16	1.73	9	0.60	1.73	12	0.30	12	9	0.36	10	16	0.15	12	0.15	12	0.30	9	0.40
	0.61 – 1.50	0.20	12	0.15	1.73	9	0.60	1.73	12	0.36	10	9	0.36	10	12	0.15	12	0.22	12	0.40	9	0.40
	1.51 – 2.25	0.20	12	0.15	1.73	9	0.60	1.73	12	0.36	10	9	0.36	10	12	0.15	12	0.22	12	0.40	9	0.40
1.50 M.	0.00 – 0.30	0.24	20	0.18	2.10	9	0.45	2.10	12	0.25	16	9	0.45	10	20	0.15	16	0.15	12	0.25	9	0.45
	0.31 – 0.60	0.225	20	0.22	2.10	9	0.60	2.10	12	0.30	14	9	0.45	10	20	0.20	12	0.12	12	0.30	9	0.45
	0.61 – 1.50	0.20	16	0.16	2.03	9	0.60	2.03	12	0.45	10	9	0.45	10	16	0.15	12	0.15	12	0.45	9	0.45
	1.51 – 2.25	0.225	16	0.16	2.03	9	0.60	2.03	12	0.45	10	9	0.45	10	16	0.15	12	0.15	12	0.45	9	0.45
1.80 M.	0.00 – 0.30	0.25	16	0.12	2.33	9	0.45	2.33	12	0.21	22	9	0.45	12	16	0.17	16	0.20	12	0.21	9	0.45
	0.31 – 0.60	0.24	16	0.14	2.33	9	0.60	2.33	12	0.30	16	9	0.45	12	16	0.12	12	0.12	12	0.30	9	0.45
	0.61 – 1.50	0.225	16	0.15	2.33	9	0.60	2.33	12	0.45	12	9	0.45	12	16	0.15	12	0.15	12	0.45	9	0.45
	1.51 – 2.25	0.225	16	0.14	2.33	9	0.60	2.33	12	0.45	12	9	0.45	12	16	0.12	12	0.12	12	0.45	9	0.45

NO. = TOTAL AMOUNT OF BARS, L = TOTAL LENGTH OF EACH BAR

TABLE OF VERTICAL WALL REINFORCEMENT

DEPTH D	WIDTH W	SINGLE BOX CULVERT						MULTIPLE BOX CULVERT					
		DEPTH OF FILL (E) 0.00–2.25						DEPTH OF FILL (E) 0.00–2.25					
		REINFORCING BAR v		REINFORCING BAR vo		REINFORCING BAR h		EXTERIOR WALL			INTERIOR WALL		
								REINFORCING BAR v		TOTAL AMOUNT OF h2 (RB9) EACH WALL	REINFORCING BAR vo		TOTAL AMOUNT OF h3 (#3) EACH WALL
		DB	@	RB	@	RB	@	DB	@		RB	@	
0.60	0.20	12	0.30	9	0.30	9	0.30	12	0.30	8	9	0.40	4
0.90	0.20	12	0.30	9	0.30	9	0.30	12	0.30	12	9	0.40	6
1.20	0.20	12	0.30	9	0.30	9	0.30	12	0.30	12	9	0.40	6
1.50	0.225	12	0.30	9	0.30	9	0.30	12	0.30	16	9	0.40	8
1.80	0.25	12	0.30	9	0.30	9	0.30	12	0.30	20	9	0.40	10

NOTES :

1. ALL DIMENSIONS SHOWN ARE IN METERS UNLESS OTHERWISE INDICATED.
2. DESIGN LIVE LOAD: HL–93.
3. A MINIMUM ULTIMATE COMPRESSIVE STRENGTH FOR A 150x150x150 MM. CUBE AT 28 DAYS AS FOLLOWS:
   - A) FOR RC. BOX CULVERT 30 MPa. (306 KG/CM^2)
   - B) FOR PRECAST BOX CULVERT 40 MPa. (408 KG/CM^2)
   - C) FOR LEAN CONCRETE 20 MPa. (204 KG/CM^2)
4. REINFORCEMENT
   SR24 FOR BAR ø9 MM. AND SMALLER SIZE
   SD40 FOR BAR ø12 MM. AND LARGER SIZE
5. CLEAR CONCRETE COVER SHALL BE 0.05 M. EXCEPT FOR THE BOTTOM OF SLAB OR WALL CASTING ON GROUND (OR LEAN CONCRETE) WHERE 0.075 M. CLEAR COVER PROVIDED.
6. THE MAXIMUM DEPTH OF FILL IS 2.25 M.
7. THIS DRAWING IS USING IN CONJUNCTION WITH DWG. NO. BC–104

REF.	REVISION	SIGNATURE	DATE

KINGDOM OF THAILAND

MINISTRY OF TRANSPORT
DEPARTMENT OF HIGHWAYS

STANDARD DRAWING
CAST–IN–SITU BOX CULVERT
SIMPLE SPAN R.C. BOX CULVERT
PLAN ELEVATION AND SECTION

DESIGNED : D.O.H. & CONSULTANTS	CHECKED : BUREAU OF LOCATION & DESIGN	DATE : OCT 2015
SUBMITTED : (DIRECTOR OF LOCATION & DESIGN BUREAU)		SCALE : AS SHOWN
APPROVED : (FOR DIRECTOR GENERAL)		DWG NO. BC–103
		SHEET NO. 319

D:\std dwg 2015\BC-103(REV00)

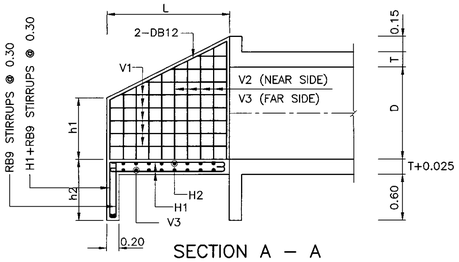

SECTION A – A
NOT TO SCALE

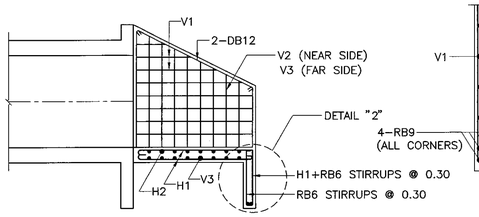

SECTION B – B
NOT TO SCALE

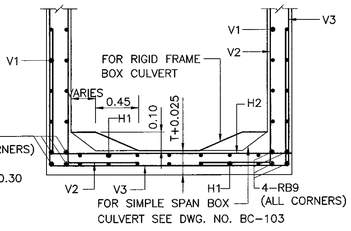

SECTION C – C
NOT TO SCALE

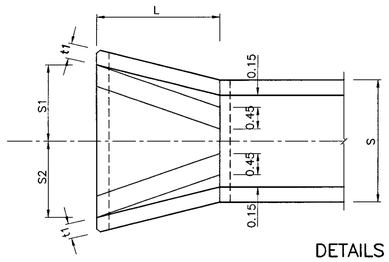

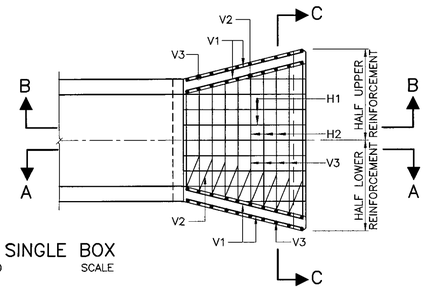

DETAILS FOR SINGLE BOX
NOT TO SCALE

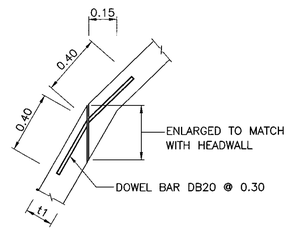

DETAIL "1"
SCALE 1 : 50

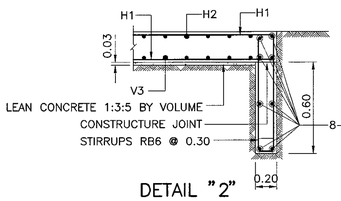

DETAIL "2"
SCALE 1 : 20

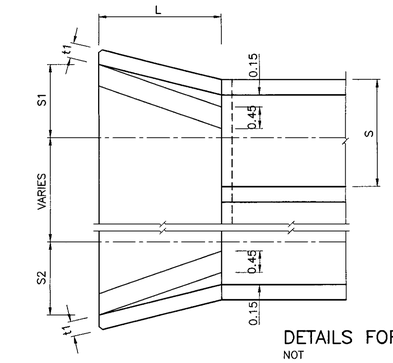

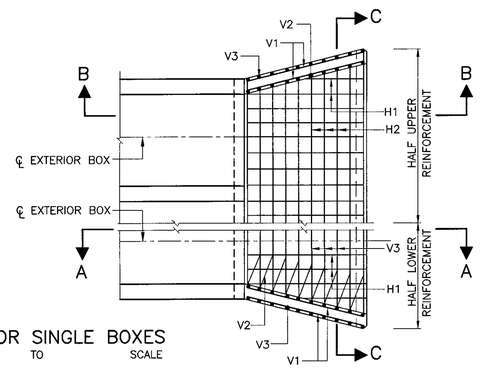

DETAILS FOR SINGLE BOXES
NOT TO SCALE

DETAIL "3"
NOT TO SCALE

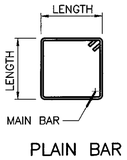

PLAIN BAR

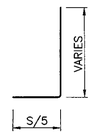

V2

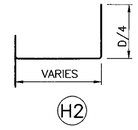

H2

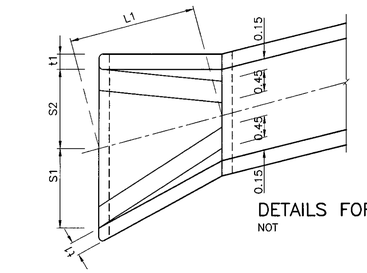

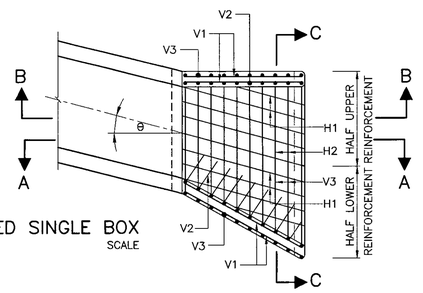

DETAILS FOR SKEWED SINGLE BOX
NOT TO SCALE

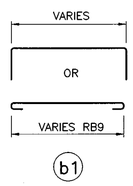

b1

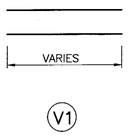

V1

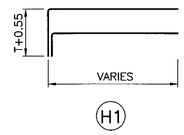

H1

DETAILS FOR SKEWED MULTIPLE BOXES
NOT TO SCALE

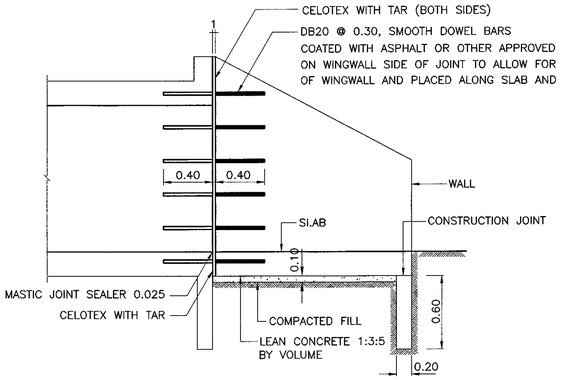

EXPANSION JOINT DETAIL
NOT TO SCALE

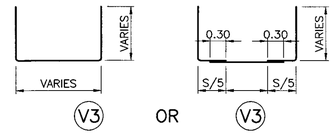

BAR BENDING DIAGRAMS
NOT TO SCALE

TABLE OF REINFORCEMENT FOR HEADWALL OF SINGLE BOX CULVERT

SIZE OF CULVERT		L	h1	t1	CULVERTS												V1		V2		V3		H1		H2		b1	
					SKEW 0°			SKEW 15°			SKEW 30°			SKEW 45°													
S	D				L1	S1	S2	L1	S1	S2	L1	S1	S2	L1	S1	S2	DB,RB	@	DB,RB	@	DB,RB	@	DB,RB	@	DB,RB	@	DB,RB	NO.
0.60	0.60	0.90	0.50	0.20	0.90	0.54	0.54	0.93	0.54	0.57	1.04	0.57	0.68	1.27	0.68	0.95	9	0.30	9	0.20	9	0.20	9	0.30	9	0.20	9	4
0.90	0.60	0.90	0.50	0.20	0.90	0.69	0.69	0.93	0.69	0.73	1.04	0.73	0.83	1.27	0.83	1.11	9	0.30	9	0.20	9	0.20	9	0.30	9	0.20	9	4
0.90	0.90	1.40	0.55	0.20	1.40	0.82	0.82	1.45	0.82	0.86	1.61	0.88	1.04	1.96	1.04	1.47	9	0.30	9	0.20	9	0.20	9	0.30	9	0.20	9	4
1.20	0.90	1.40	0.55	0.20	1.40	0.96	0.96	1.45	0.96	1.03	1.61	1.03	1.19	1.96	1.19	1.62	9	0.30	9	0.20	9	0.20	9	0.30	9	0.20	9	4
1.20	1.20	1.80	0.65	0.20	1.80	1.06	1.06	1.86	1.06	1.15	2.07	1.15	1.35	2.54	1.35	1.92	9	0.30	9	0.20	9	0.20	9	0.30	9	0.20	9	4
1.50	0.90	1.40	0.55	0.20	1.40	1.12	1.12	1.45	1.12	1.18	1.61	1.18	1.34	1.98	1.34	1.77	9	0.30	9	0.20	9	0.20	9	0.30	9	0.20	9	4
1.50	1.20	1.80	0.65	0.20	1.80	1.23	1.23	1.86	1.23	1.31	2.07	1.31	1.51	2.54	1.51	2.07	9	0.30	9	0.20	9	0.20	9	0.30	9	0.20	9	4
1.50	1.50	2.30	0.70	0.225	2.30	1.36	1.36	2.36	1.36	1.46	2.65	1.46	1.72	3.25	1.72	2.43	9	0.30	9	0.15	9	0.15	9	0.30	9	0.15	9	4
1.80	1.20	1.90	0.65	0.20	1.90	1.38	1.38	1.86	1.38	1.46	2.07	1.46	1.66	2.54	1.66	2.22	9	0.30	9	0.15	9	0.15	9	0.30	9	0.15	9	4
1.80	1.50	2.30	0.70	0.225	2.30	1.52	1.52	2.36	1.52	1.61	2.65	1.61	1.87	3.25	1.87	2.58	9	0.30	9	0.15	9	0.15	9	0.30	9	0.15	9	4
1.80	1.80	2.70	0.80	0.25	2.70	1.62	1.62	2.79	1.62	1.73	3.11	1.73	2.04	3.82	2.04	2.87	9	0.30	9	0.10	9	0.10	9	0.30	9	0.10	9	4
2.10	1.80	2.70	0.80	0.25	2.70	1.77	1.77	2.79	1.77	1.88	3.11	1.88	2.19	3.82	2.19	3.02	9	0.30	12	0.20	12	0.20	12	0.30	12	0.20	12	4
2.10	2.10	3.15	0.85	0.25	3.15	1.89	1.89	3.26	1.89	2.02	3.63	2.02	2.36	4.45	2.38	3.35	9	0.30	12	0.16	12	0.16	12	0.30	12	0.16	12	4
2.40	2.10	3.15	0.85	0.25	3.15	2.04	2.04	3.26	2.04	2.17	3.63	2.17	2.53	4.45	2.53	3.50	9	0.30	12	0.16	12	0.16	12	0.30	12	0.16	12	4
2.40	2.40	3.60	0.95	0.25	3.60	2.16	2.16	3.72	2.16	2.31	4.15	2.31	2.72	5.08	2.72	3.83	9	0.30	12	0.12	12	0.12	12	0.30	12	0.12	12	4
2.70	2.40	3.60	0.95	0.25	3.60	2.31	2.31	3.72	2.31	2.46	4.15	2.46	2.87	5.08	2.87	3.96	9	0.30	12	0.12	12	0.12	12	0.30	12	0.12	12	4
2.70	2.70	4.00	1.00	0.275	4.00	2.42	2.42	4.14	2.42	2.59	4.61	2.59	3.03	5.65	3.03	4.28	9	0.30	12	0.10	12	0.10	12	0.30	12	0.10	12	4
3.00	2.70	4.00	1.00	0.275	4.00	2.57	2.57	4.14	2.57	2.74	4.61	2.74	3.18	5.65	3.18	4.43	9	0.30	12	0.10	12	0.10	12	0.30	12	0.10	12	4
3.00	3.00	4.50	1.15	0.30	4.50	2.70	2.70	4.66	2.70	2.89	5.19	2.89	3.40	6.36	3.40	4.79	12	0.30	16	0.12	16	0.12	12	0.30	16	0.12	16	4
3.30	3.00	4.50	1.15	0.30	4.50	2.85	2.85	4.66	2.85	3.04	5.19	3.04	3.55	6.36	3.55	4.94	12	0.30	16	0.12	16	0.12	12	0.30	16	0.12	16	4
3.30	3.30	5.00	1.20	0.325	5.00	2.99	2.99	5.17	2.99	3.20	5.76	3.20	3.76	7.07	3.76	5.31	12	0.30	16	0.10	16	0.10	12	0.30	16	0.10	16	4
3.60	3.30	5.00	1.20	0.325	5.00	3.14	3.14	5.17	3.14	3.35	5.76	3.35	3.91	7.07	3.91	5.46	12	0.30	16	0.10	16	0.10	12	0.30	16	0.10	16	4
3.60	3.60	5.40	1.30	0.35	5.40	3.24	3.24	5.59	3.24	3.47	6.32	3.47	4.08	7.63	4.06	5.75	12	0.30	20	0.12	20	0.12	12	0.30	20	0.12	20	4

NO. = TOTAL AMOUNT OF BARS, L1 = L SEC θ, θ = SKEW ANGLE

NOTES :

1. ALL DIMENSIONS SHOWN ARE IN METERS UNLESS OTHERWISE INDICATED.
2. DESIGN LIVE LOAD: HL–93.
3. A MINIMUM ULTIMATE COMPRESSIVE STRENGTH FOR A 150x150x150 MM. CUBE AT 28 DAYS AS FOLLOWS:
   - A) FOR RC. BOX CULVERT 30 MPa. (306 KG/CM^2)
   - B) FOR PRECAST BOX CULVERT 40 MPa. (408 KG/CM^2)
   - C) FOR LEAN CONCRETE 20 MPa. (204 KG/CM^2)
4. LOCATIONS OF LAP SPLICE OF REBARS SHALL BE APPROVED BY THE ENGINEER.
5. IN CASE OF SALINE PROTECTION, HIGH SULPHATE CONFORMING TO TIS 15 SHALL BE USED INSTEAD OF TYPE 1 PORTLAND CEMENT.
6. THIS DRAWING IS USING IN CONJUNCTION WITH DWG. NO. BC–101 AND BC–103

REF.	REVISION	SIGNATURE	DATE

KINGDOM OF THAILAND

MINISTRY OF TRANSPORT
DEPARTMENT OF HIGHWAYS

STANDARD DRAWING

R.C. HEADWALL FOR BOX CULVERT
DIMENSION REINFORCEMENT AND DETAILS

DESIGNED : D.O.H. & CONSULTANTS | CHECKED : BUREAU OF LOCATION & DESIGN | DATE : OCT 2015

SUBMITTED : (DIRECTOR OF LOCATION & DESIGN BUREAU) | SCALE : AS SHOWN

APPROVED : (FOR DIRECTOR GENERAL) | DWG NO. BC–104

SHEET NO. 320

D:\std dwg 2015\BC-104(REV00)

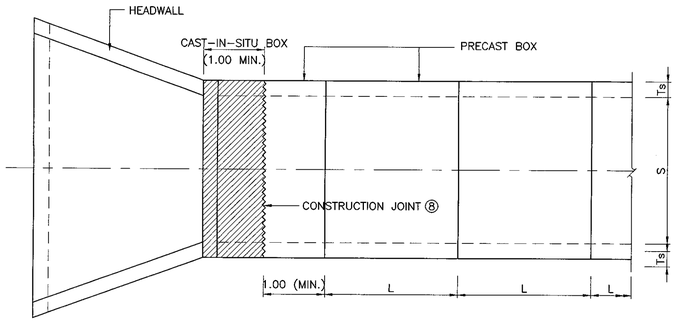

PLAN (SINGLE BOX, NON-SKEW)
SCALE 1 : 50

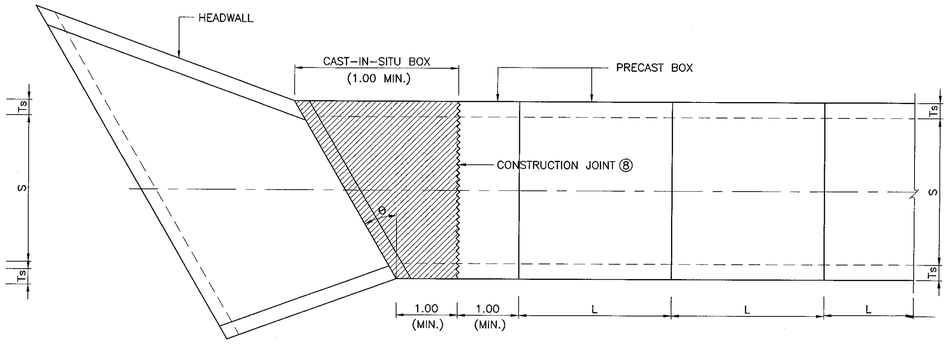

PLAN (SINGLE BOX, SKEW θ)
SCALE 1 : 50

TABLE OF DIMENSIONS

SIZE OF CULVERT	DIMENSIONS													
S x R	R	S	Ts	Tt	Tb	a	b	c	a_t	a_b	c_t	c_b	t	L*
1.20 x 1.20	1.20	1.20	0.125	0.19	0.15	0.040	0.045	0.040	0.105	0.065	0.105	0.065	0.05	1.00-2.50
1.50 x 1.20	1.20	1.50	0.15	0.20	0.175	0.050	0.045	0.055	0.10	0.075	0.105	0.08	0.06	1.00-2.50
1.50 x 1.50	1.50	1.50	0.15	0.20	0.175	0.050	0.045	0.055	0.10	0.075	0.105	0.08	0.06	1.00-2.50
1.80 x 1.50	1.50	1.80	0.175	0.20	0.175	0.060	0.045	0.070	0.085	0.06	0.095	0.07	0.065	1.00-2.50
1.80 x 1.80	1.80	1.80	0.175	0.20	0.175	0.060	0.045	0.070	0.085	0.06	0.095	0.07	0.065	1.00-2.50
2.10 x 1.80	1.80	2.10	0.20	0.20	0.20	0.075	0.045	0.080	0.075	0.075	0.08	0.08	0.08	1.00-2.00
2.10 x 2.10	2.10	2.10	0.20	0.20	0.20	0.075	0.045	0.080	0.075	0.075	0.08	0.08	0.08	1.00-2.00
2.40 x 2.10	2.10	2.40	0.20	0.20	0.20	0.075	0.045	0.080	0.075	0.075	0.08	0.08	0.08	1.00-2.00
2.40 x 2.40	2.40	2.40	0.20	0.20	0.20	0.075	0.045	0.080	0.075	0.075	0.08	0.08	0.08	1.00-2.00

*RECOMMENDED LENGTH

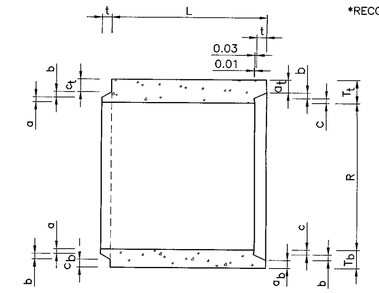

LONGITUDINAL SECTION OF PRECAST BOX
NOT TO SCALE

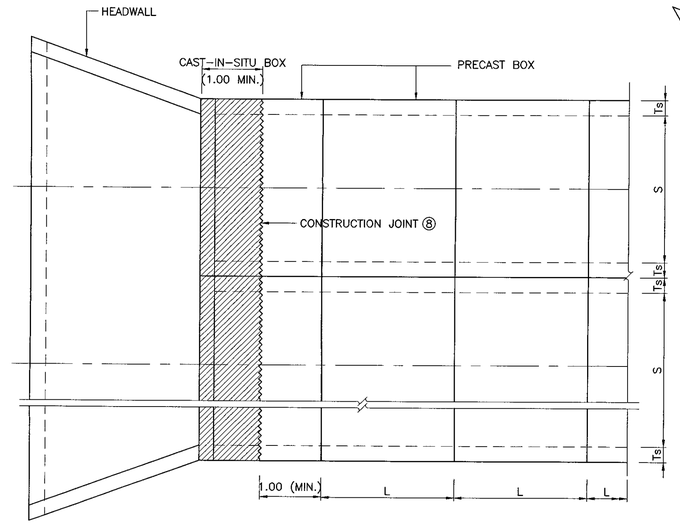

PLAN (MULTIPLE BOXES, NON-SKEW)
SCALE 1 : 50

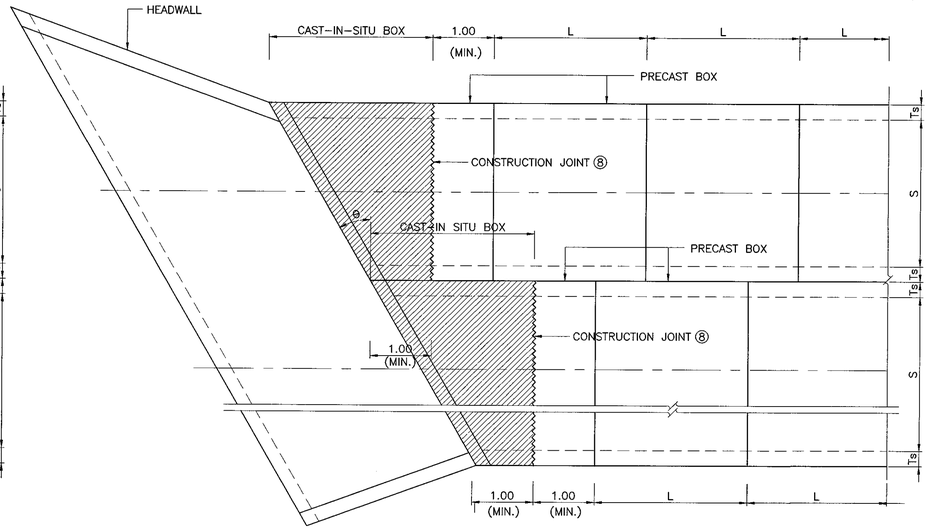

PLAN (MULTIPLE BOXES, SKEW θ)
SCALE 1 : 50

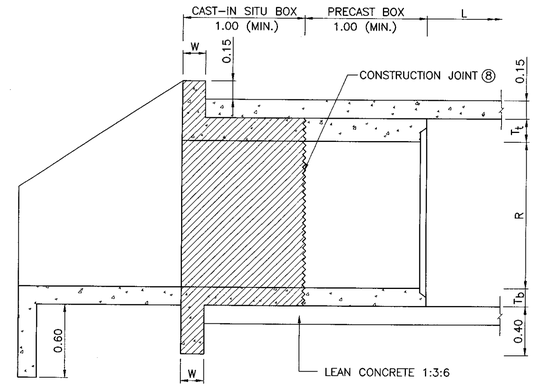

LONGITUDINAL SECTION OF HEADWALL
SCALE 1 : 50

NOTES :

1. ALL DIMENSIONS SHOWN ARE IN METERS UNLESS OTHERWISE INDICATED.
2. DESIGN LIVE LOAD: HL-93.
3. A MINIMUM ULTIMATE COMPRESSIVE STRENGTH FOR A 150x150x150 MM. CUBE AT 28 DAYS AS FOLLOWS:
   - A) FOR RC. BOX CULVERT 30 MPa. (306 KG/CM^2)
   - B) FOR PRECAST BOX CULVERT 40 MPa. (408 KG/CM^2)
   - C) FOR LEAN CONCRETE 20 MPa. (204 KG/CM^2)
4. LOCATIONS OF LAP SPLICE OF REBARS SHALL BE APPROVED BY THE ENGINEER.
5. IN CASE OF SALINE PROTECTION, HIGH SULPHATE CONFORMING TO TIS 15 SHALL BE USED INSTEAD OF TYPE 1 PORTLAND CEMENT.
6. W IS 0.20 M. FOR NON-SKEW BOX AND IS 0.25 M. FOR SKEW BOX.
7. THE SKEW ANGLE (θ) SHALL NOT BE MORE THAN 45 DEGREE.
8. (⑧) THE SURFACE OF BOX CULVERT SHALL BE ROUGHENED AND CLEANED
9. THIS DRAWING IS USING IN CONJUNCTION WITH DWG. NO. BC-106

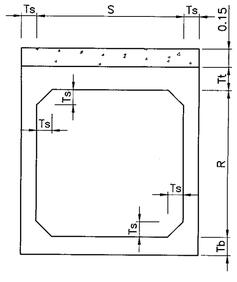

ELEVATION
(SINGLE BOX, NON-SKEW)
SCALE 1 : 50

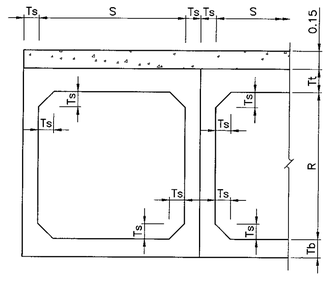

ELEVATION
(MULTIPLE BOXES, NON-SKEW)
SCALE 1 : 50

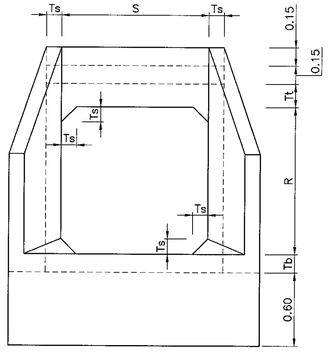

HEADWALL ELEVATION (SINGLE BOX)
SCALE 1 : 50

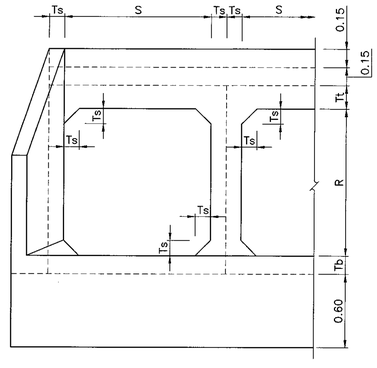

HEADWALL ELEVATION (MULTIPLE BOXES)
SCALE 1 : 50

REF.	REVISION	SIGNATURE	DATE

KINGDOM OF THAILAND

MINISTRY OF TRANSPORT
DEPARTMENT OF HIGHWAYS

STANDARD DRAWING

PRECAST BOX CULVERT
FILL DEPTH ⩽ 0.60 M. PLAN ELEVATION AND SECTION

DESIGNED : D.O.H. & CONSULTANTS	**CHECKED :** BUREAU OF LOCATION & DESIGN	**DATE :** OCT 2015
SUBMITTED : (DIRECTOR OF LOCATION & DESIGN BUREAU)		**SCALE :** AS SHOWN
		DWG NO. BC-105
APPROVED : (FOR DIRECTOR GENERAL)		**SHEET NO.** 321

D:\std dwg 2015\BC-105(REV00)

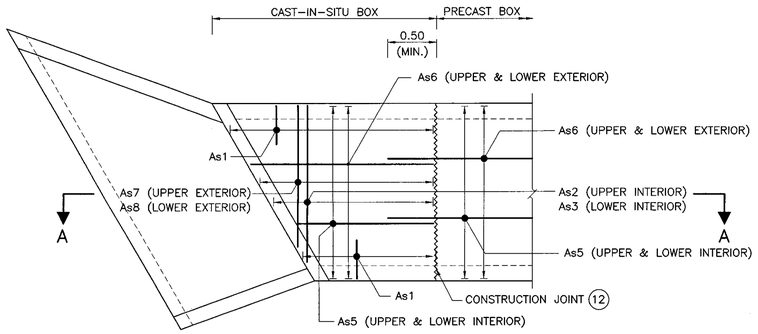

DETAILS FOR SKEW Θ CAST–IN–SITU BOX
SCALE 1 : 100

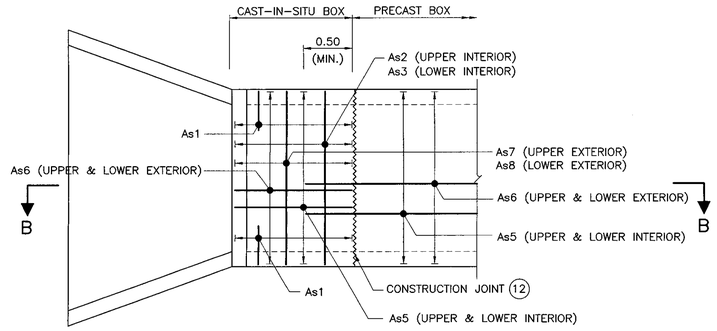

DETAILS FOR CAST–IN–SITU BOX
SCALE 1 : 100

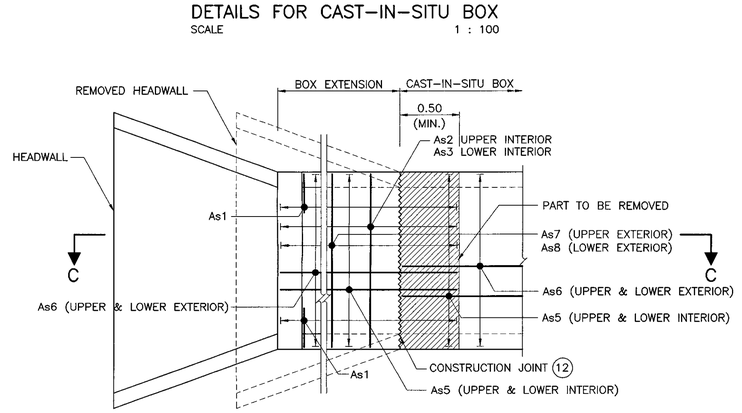

DETAILS FOR BOX EXTENSION
SCALE 1 : 100

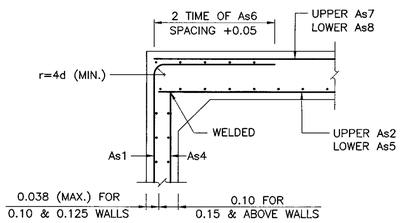

TYPE A

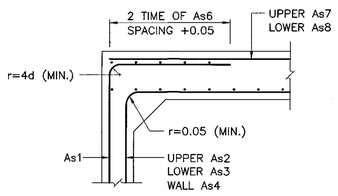

TYPE B

DETAIL "1"
SCALE 1 : 25

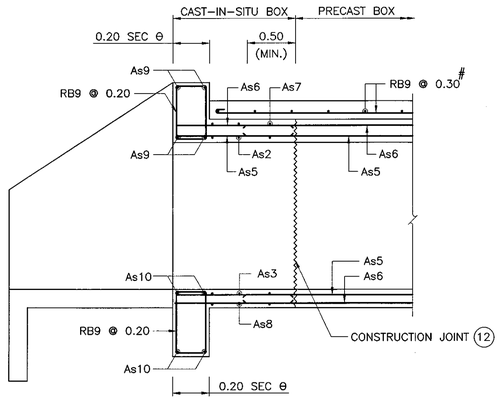

SECTION A – A
SCALE 1 : 100

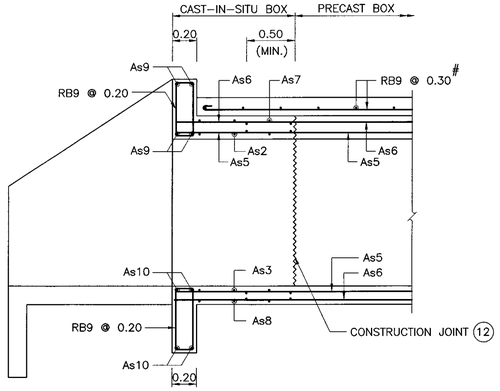

SECTION B – B
SCALE 1 : 100

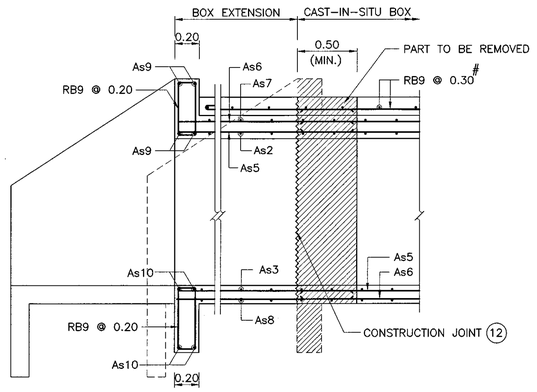

SECTION C – C
SCALE 1 : 100

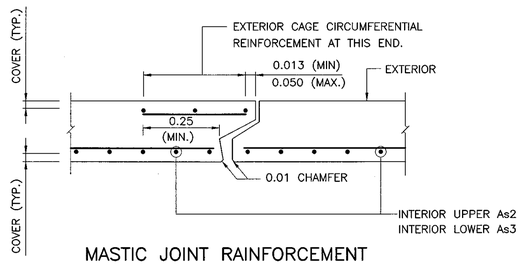

MASTIC JOINT RAINFORCEMENT
SCALE 1 : 10

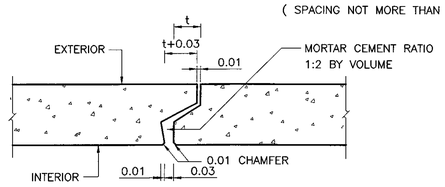

MASTIC JOINT SEALER DETAIL
SCALE 1 : 10

TABLE OF REINFOERCEMENT (SQ. CM. PER 1.00 M. LENGTH OF BOX)

SIZE OF CULVERT S x R	REINFORCEMENT BARS								END BEAM	
	As1	As2	As3	As4	As5	As6	As7	As8	As9	As10
1.20 x 1.20	3.80	9.10	5.30	2.80	4.40	3.80	3.80	3.00	2–DB12	2–DB12
1.50 x 1.20	4.90	9.30	6.60	3.00	4.40	4.00	4.00	3.60	2–DB16	2–DB12
1.50 x 1.50	4.40	9.70	7.20	3.00	4.70	4.00	4.00	3.60	2–DB16	2–DB12
1.80 x 1.50	5.70	10.20	7.20	3.60	4.40	4.00	4.00	3.60	2–DB20	2–DB16
1.80 x 1.80	5.30	10.80	7.80	3.60	4.70	4.00	4.00	3.60	2–DB20	2–DB16
2.10 x 1.80	5.90	10.80	7.80	4.00	4.20	4.00	4.20	4.00	2–DB25	2–DB20
2.10 x 2.10	5.50	11.20	8.30	4.00	4.40	4.00	4.90	4.00	2–DB25	2–DB20
2.40 x 2.10	7.20	12.30	9.50	4.00	4.70	4.00	5.70	4.70	2–DB25	2–DB25
2.40 x 2.40	6.60	12.70	10.20	4.90	4.70	4.00	6.10	5.50	2–DB25	2–DB25

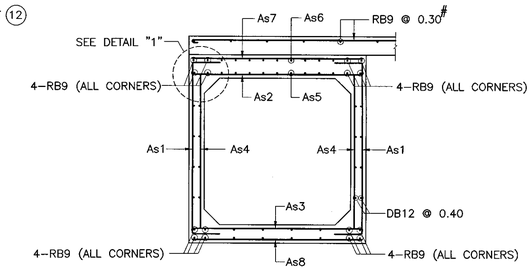

DETAILS FOR PRECAST BOX
SCALE 1 : 25

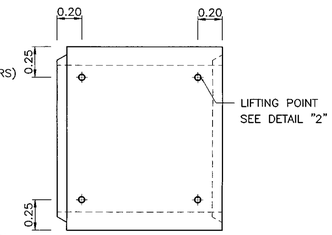

BOX LIFTING LOCATIONS
SCALE 1 : 25

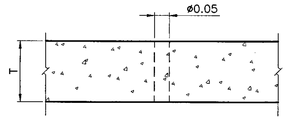

DETAIL "2"
SCALE 1 : 10

NOTES :

1. ALL DIMENSIONS SHOWN ARE IN METERS UNLESS OTHERWISE INDICATED.
2. DESIGN LIVE LOAD: HL–93.
3. A MINIMUM ULTIMATE COMPRESSIVE STRENGTH FOR A 150x150x150 MM. CUBE AT 28 DAYS AS FOLLOWS:
   A) FOR RC. BOX CULVERT 30 MPa. (306 KG/CM^2)
   B) FOR PRECAST BOX CULVERT 40 MPa. (408 KG/CM^2)
   C) FOR LEAN CONCRETE 20 MPa. (204 KG/CM^2)
4. REINFORCEMENT
   SR24 FOR BAR ø9 MM. AND SMALLER SIZE
   SD40 FOR BAR ø12 MM. AND LARGER SIZE
5. CLEAR CONCRETE COVER SHALL BE 0.05 M.
6. FOR DETAILS OF HEADWALL SEE DWG. NO. BC–104
7. WELDED WIRE FABRIC FOR STEEL REINFORCEMENT SHALL HAVE A MINIMUM YIELD STRENGTH (Fsy) OF 440 MPa.
8. DEPTH OF FILL SHALL NOT EXCEED 0.60
9. PREPARATION FOR INSTALLATION OF PRECAST BOX CULVERT.
   a) POURING LEAN CONCRETE OF MIXING RATIO 1:3:6 BY WEIGTH AND THICKNESS NOT LESS THAN 0.12
   b) THE LEVEL OF LEAN CONCRETE MUST BE APPROXIMATLY 0.03 LOWER THAN THE EXACT LEVEL.
   c) INSTALL PRECAST BOX CULVERT AFTER LEAN CONCRETE WAS HARDEN. BEFORE INSTALLING PRECAST BOX CULVERT, THERE MUST BE CEMENT MORTAR WITH MIXING RATIO 1:2 BY VOLUME ON THE SURFACE OF LEAN CONCRETE AND THE THICKNESS OF THESE MORTAR SHOULD BE THICK ENOUGH TO FILL THE VOID BETWEEN THE BOTTOM OF PRECAST BOX CULVERT AND TOP SURFACE OF LEAN CONCRETE.
10. THE DIMENSIONS AS SHOWN IN TABLE OF DIMENSIONS ARE ONLY RECOMMENDED DIMENSIONS.
11. THE REINFORCEMENT FOR CAST–IN–SITU CONCRETE SECTION MUST BE THE SAME AS THE REINFORCEMENT IN PRECAST BOX CULVERT. FOR SKEW BOX, THE REINFORCEMENT SHALL FOLLOW THIS DRAWING.
12. THE SURFACE OF BOX CULVERT SHALL BE ROUGHENED AND CLEANED
13. THIS DRAWING IS USING IN CONJUNCTION WITH DWG. NO. BC–105
14. PROVIDE DB12 BARS AS LONGITUDINAL STEEL BARS AT THE INNER AND OUTER SIDE OF PRECAST BOX CULVERT WALL (SPACING NOT MORE THAN 40 CM.)

REF.	REVISION	SIGNATURE	DATE

KINGDOM OF THAILAND

MINISTRY OF TRANSPORT
DEPARTMENT OF HIGHWAYS

STANDARD DRAWING
PRECAST BOX CULVERT
FILL DEPTH ⩽ 0.60 M. REINFORCEMENT DETAIL

DESIGNED : D.O.H. & CONSULTANTS	CHECKED : BUREAU OF LOCATION & DESIGN	DATE : OCT 2015
SUBMITTED : (DIRECTOR OF LOCATION & DESIGN BUREAU)		SCALE : AS SHOWN
APPROVED : (FOR DIRECTOR GENERAL)		DWG NO. BC–106
		SHEET NO. 322

D:\std dwg 2015\BC-106(REV00)

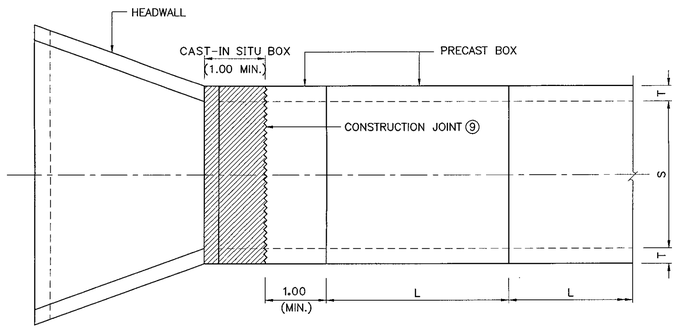

PLAN (SINGLE BOX, NON-SKEW)
SCALE 1 : 100

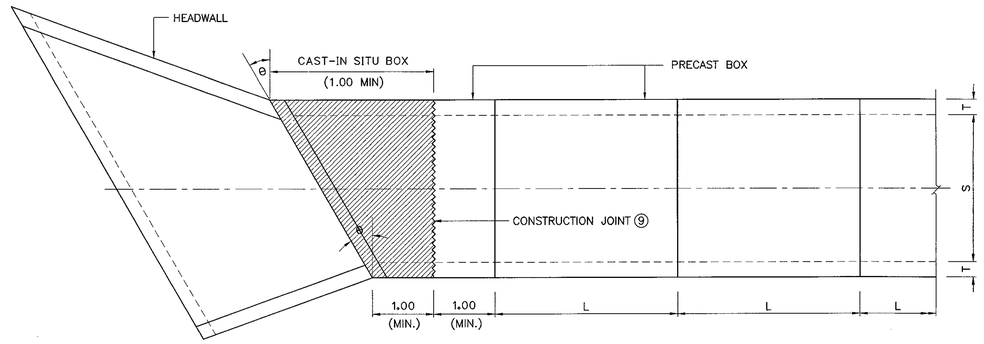

PLAN (SINGLE BOX, SKEW θ)
SCALE 1 : 100

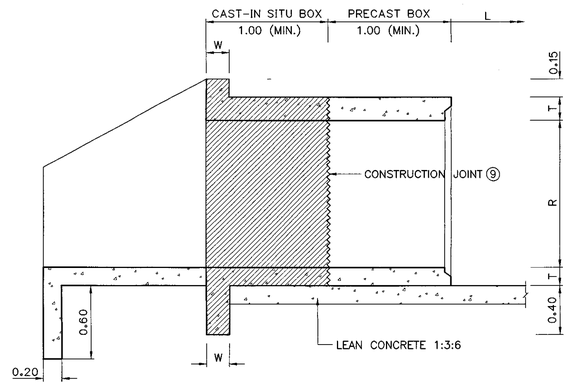

LONGITUDINAL SECTION OF HEADWALL
SCALE 1 : 100

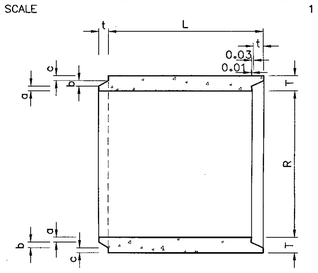

LONGITUDINAL SECTION OF PRECAST BOX
SCALE 1 : 100

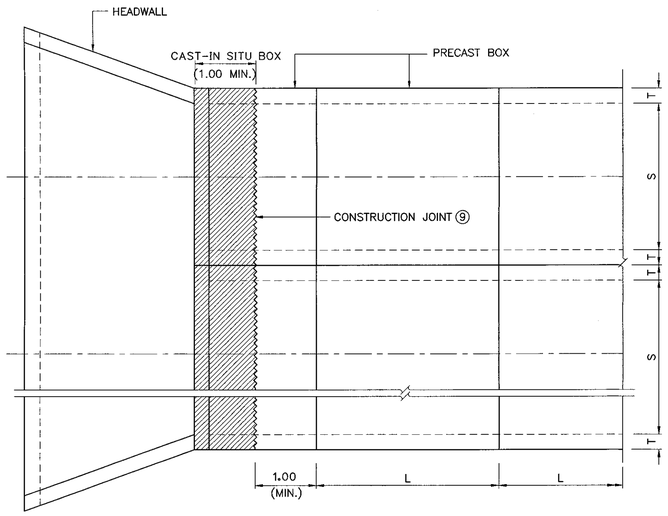

PLAN (MULTIPLE BOXES, NON-SKEW)
SCALE 1 : 100

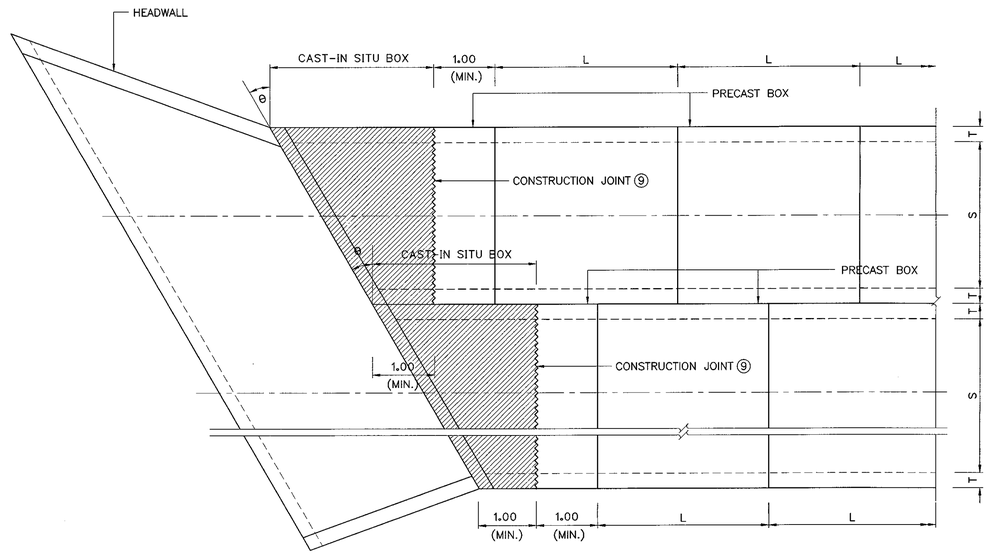

PLAN (MULTIPLE BOXES, SKEW θ)
SCALE 1 : 100

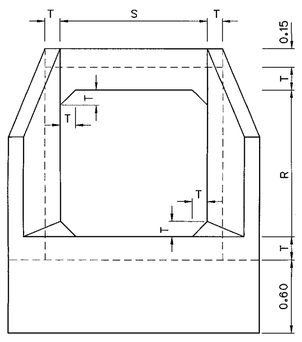

SINGLE BOX

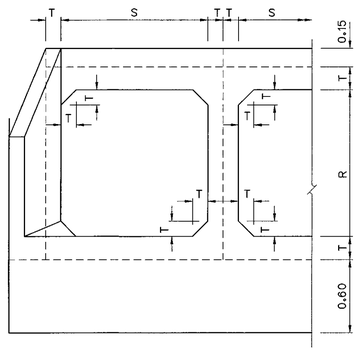

MULTIPLE BOXES

HEADWALL ELEVATION (SKEW)
SCALE 1 : 100

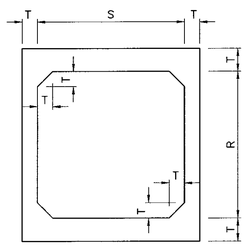

SINGLE BOX

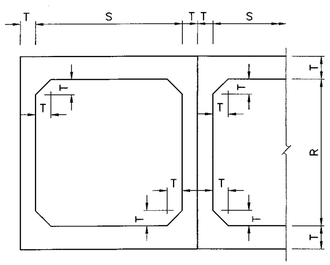

MULTIPLE BOXES

HEADWALL ELEVATION (NON-SKEW)
SCALE 1 : 100

TABLE OF DIMENSIONS

SIZE OF CULVERT	DIMENSIONS							
S x R	R	S	T	a	b	c	t	L*
1.20 x 1.20	1.20	1.20	0.125	0.04	0.045	0.04	0.05	1.00-2.50
1.50 x 1.20	1.20	1.50	0.15	0.05	0.045	0.055	0.06	1.00-2.50
1.50 x 1.50	1.50	1.50	0.15	0.05	0.045	0.055	0.06	1.00-2.50
1.80 x 1.50	1.50	1.80	0.175	0.055	0.065	0.055	0.065	1.00-2.50
1.80 x 1.80	1.80	1.80	0.175	0.055	0.065	0.55	0.065	1.00-2.50
2.10 x 1.80	1.80	2.10	0.20	0.055	0.085	0.06	0.08	1.00-2.00
2.10 x 2.10	2.10	2.10	0.20	0.055	0.085	0.06	0.08	1.00-2.00
2.40 x 2.10	2.10	2.40	0.20	0.055	0.085	0.06	0.08	1.00-2.00
2.40 x 2.40	2.40	2.40	0.20	0.055	0.085	0.06	0.08	1.00-2.00

*RECOMMENDED LENGTH

NOTES :

1. ALL DIMENSIONS SHOWN ARE IN METERS UNLESS OTHERWISE INDICATED.
2. DESIGN LIVE LOAD: HL-93.
3. A MINIMUM ULTIMATE COMPRESSIVE STRENGTH FOR A 150x150x150 MM. CUBE AT 28 DAYS AS FOLLOWS:
   - A) FOR RC. BOX CULVERT 30 MPa. (306 KG/CM^2)
   - B) FOR PRECAST BOX CULVERT 40 MPa. (408 KG/CM^2)
   - C) FOR LEAN CONCRETE 20 MPa. (204 KG/CM^2)
4. REINFORCEMENT
   SR24 FOR BAR ø9 MM. AND SMALLER SIZE
   SD40 FOR BAR ø12 MM. AND LARGER SIZE
5. CLEAR CONCRETE COVER SHALL BE 0.05 M.
6. DEPTH OF FILL SHALL NOT EXCEED 3.00
7. THE SKEW ANGLE (θ) SHALL NOT BE MORE THAN 45 DEGREE.
8. W IS 0.20 FOR NON-SKEW BOX AND IS 0.25 FOR SKEW BOX.
9. (9) THE SURFACE OF BOX CULVERT SHALL BE ROUGHENED AND CLEANED
10. THIS DRAWING IS USING IN CONJUNCTION WITH DWG. NO. BC-108

KINGDOM OF THAILAND

MINISTRY OF TRANSPORT
DEPARTMENT OF HIGHWAYS

STANDARD DRAWING

PRECAST BOX CULVERT FILL
FILL DEPTH > 0.60 M.PLAN ELEVATION AND SECTION

DESIGNED : D.O.H. & CONSULTANTS	CHECKED : BUREAU OF LOCATION & DESIGN		DATE : OCT 2015
SUBMITTED : (DIRECTOR OF LOCATION & DESIGN BUREAU)			SCALE : AS SHOWN
APPROVED : (FOR DIRECTOR GENERAL)			DWG NO. BC-107
			SHEET NO. 323

REF.	REVISION	SIGNATURE	DATE

D:\std dwg 2015\BC-107(REV00)

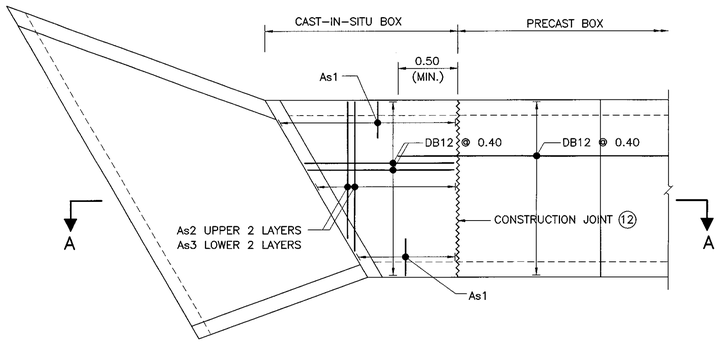

DETAILS FOR SKEW θ CAST–IN–SITU BOX
SCALE 1 : 100

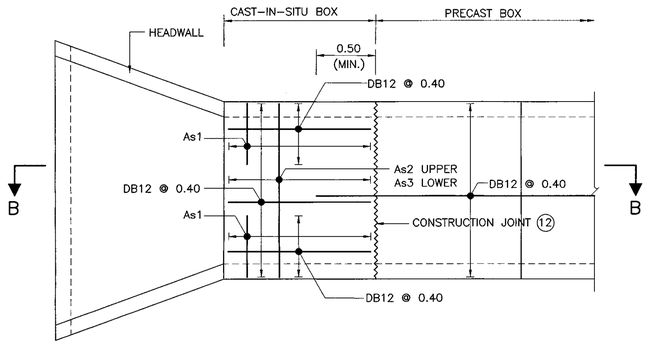

DETAILS FOR CAST–IN–SITU BOX
SCALE 1 : 100

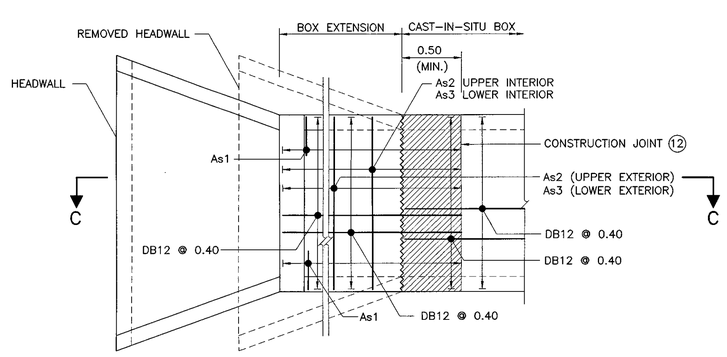

DETAILS FOR BOX EXTENSION
SCALE 1 : 100

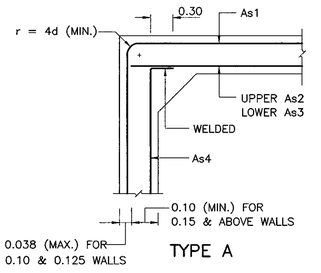

TYPE A

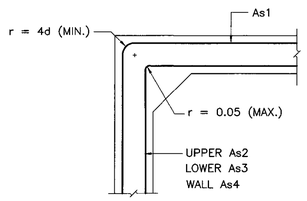

TYPE B

DETAIL "1"
SCALE 1 : 25

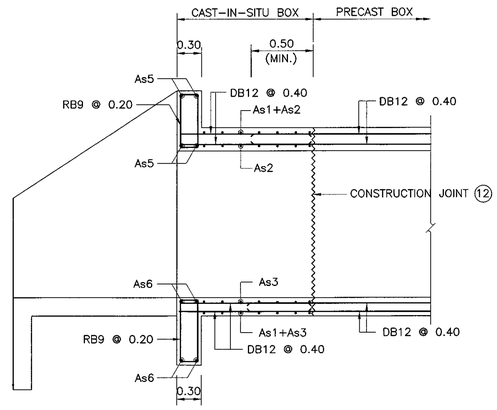

SECTION A – A
SCALE 1 : 100

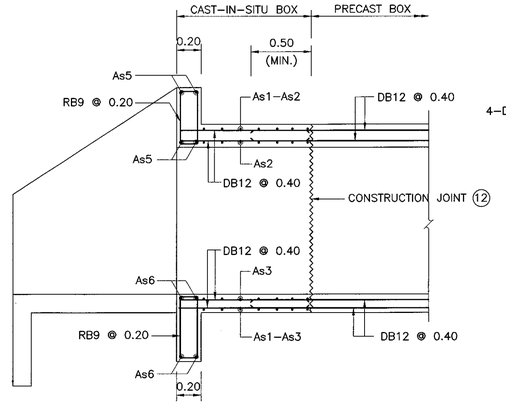

SECTION B – B
SCALE 1 : 100

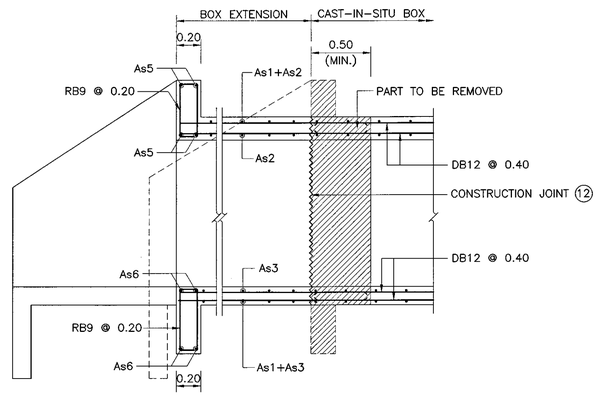

SECTION C – C
SCALE 1 : 100

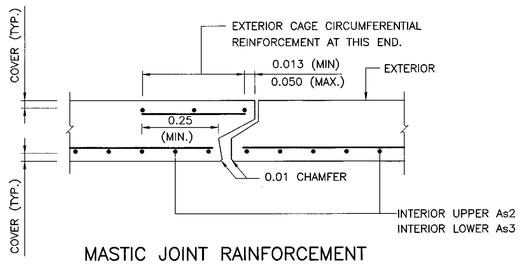

MASTIC JOINT RAINFORCEMENT
SCALE 1 : 10

TABLE OF REINFOERCEMENT (SQ. CM. PER 1.00 M. LENGTH OF BOX)

SIZE OF CULVERT S x R	MIN. BAR HOOKED INSIDE	REINFORCEMENT BARS				END BEAM	
		As1	As2	As3	As4	As5	As6
1.20 x 1.20	0.86	3.80	6.40	5.90	2.50	2–DB12	2–DB12
1.50 x 1.20	0.71	4.90	6.80	5.70	3.00	2–DB16	2–DB12
1.50 x 1.50	1.04	4.20	7.40	6.40	3.00	2–DB16	2–DB12
1.80 x 1.50	0.84	5.30	7.60	7.20	3.60	2–DB20	2–DB16
1.80 x 1.80	1.22	4.90	8.30	7.80	3.60	2–DB20	2–DB16
2.10 x 1.80	0.97	5.90	8.30	8.50	4.00	2–DB25	2–DB20
2.10 x 2.10	1.40	5.50	8.90	9.10	4.00	2–DB25	2–DB20
2.40 x 2.10	1.04	7.00	10.60	10.40	4.00	2–DB25	2–DB25
2.40 x 2.40	1.55	6.60	11.20	11.00	4.00	2–DB25	2–DB25

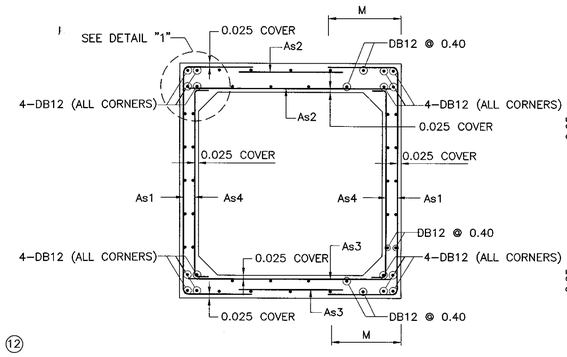

DETAILS FOR PRECAST BOX
SCALE 1 : 100

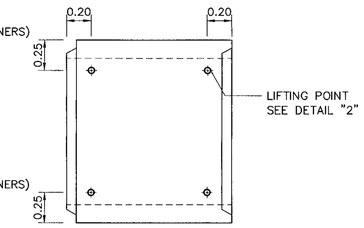

BOX LIFTING LOCATIONS
SCALE 1 : 100

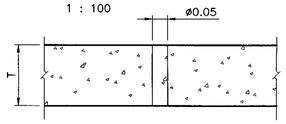

DETAIL "2"
SCALE 1 : 10

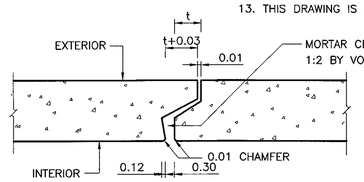

MASTIC JOINT SEALER DETAIL
SCALE 1 : 10

NOTES :

1. ALL DIMENSIONS SHOWN ARE IN METERS UNLESS OTHERWISE INDICATED.
2. DESIGN LIVE LOAD: HL–93.
3. A MINIMUM ULTIMATE COMPRESSIVE STRENGTH FOR A 150x150x150 MM. CUBE AT 28 DAYS AS FOLLOWS:
   A) FOR RC. BOX CULVERT 30 MPa. (306 KG/CM^2)
   B) FOR PRECAST BOX CULVERT 40 MPa. (408 KG/CM^2)
   C) FOR LEAN CONCRETE 20 MPa. (204 KG/CM^2)
4. REINFORCEMENT
   SR24 FOR BAR ø9 MM. AND SMALLER SIZE
   SD40 FOR BAR ø12 MM. AND LARGER SIZE
5. CLEAR CONCRETE COVER SHALL BE 0.05 M.
6. FOR DETAILS OF HEADWALL SEE DWG. NO. BC–104
7. WELDED WIRE FABRIC FOR STEEL REINFORCEMENT SHALL HAVE A MINIMUM YIELD STRENGTH (Fsy) OF 440 MPa.
8. DEPTH OF FILL SHALL NOT EXCEED 3.00
9. PREPARATION FOR INSTALLATION OF PRECAST BOX CULVERT.
   a) POURING LEAN CONCRETE OF MIXING RATIO 1:3:6 BY WEIGTH AND THICKNESS NOT LESS THAN 0.12
   b) THE LEVEL OF LEAN CONCRETE MUST BE APPROXIMATLY 0.03 LOWER THAN THE EXACT LEVEL.
   c) INSTALL PRECAST BOX CULVERT AFTER LEAN CONCRETE WAS HARDEN. BEFORE INSTALLING PRECAST BOX CULVERT, THERE MUST BE CEMENT MORTAR WITH MIXING RATIO 1:2 BY VOLUME ON THE SURFACE OF LEAN CONCRETE AND THE THICKNESS OF THESE MORTAR SHOULD BE THICK ENOUGH TO FILL THE VOID BETWEEN THE BOTTOM OF PRECAST BOX CULVERT AND TOP SURFACE OF LEAN CONCRETE.
10. THE DIMENSIONS AS SHOWN IN TABLE OF DIMENSIONS ARE ONLY RECOMMENDED DIMENSIONS.
11. THE REINFORCEMENT FOR CAST–IN–SITU CONCRETE SECTION MUST BE THE SAME AS THE REINFORCEMENT IN PRECAST BOX CULVERT. FOR SKEW BOX, THE REINFORCEMENT SHALL FOLLOW THIS DRAWING.
12. THE SURFACE OF BOX CULVERT SHALL BE ROUGHENED AND CLEANED
13. THIS DRAWING IS USING IN CONJUNCTION WITH DWG. NO. BC–107

REF.	REVISION	SIGNATURE	DATE

KINGDOM OF THAILAND

MINISTRY OF TRANSPORT
DEPARTMENT OF HIGHWAYS

STANDARD DRAWING

PRECAST BOX CULVERT

FILL DEPTH > 0.60 M. REINFORCEMENT DETAIL

DESIGNED : D.O.H. & CONSULTANTS	CHECKED : BUREAU OF LOCATION & DESIGN	DATE : OCT 2015
SUBMITTED : (DIRECTOR OF LOCATION & DESIGN BUREAU)		SCALE : AS SHOWN
APPROVED : (FOR DIRECTOR GENERAL)		DWG NO. BC–108
		SHEET NO. 324

D:\std dwg 2015\BC-108(REV00)

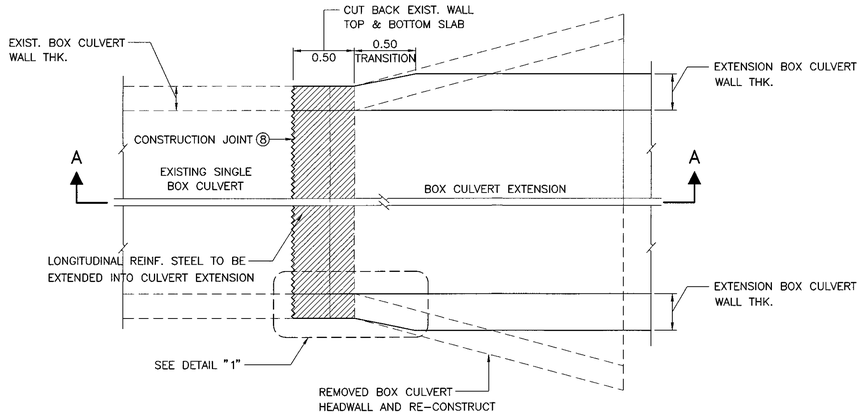

INTERIOR SINGLE BOX CULVERT PLAN
SCALE 1 : 25

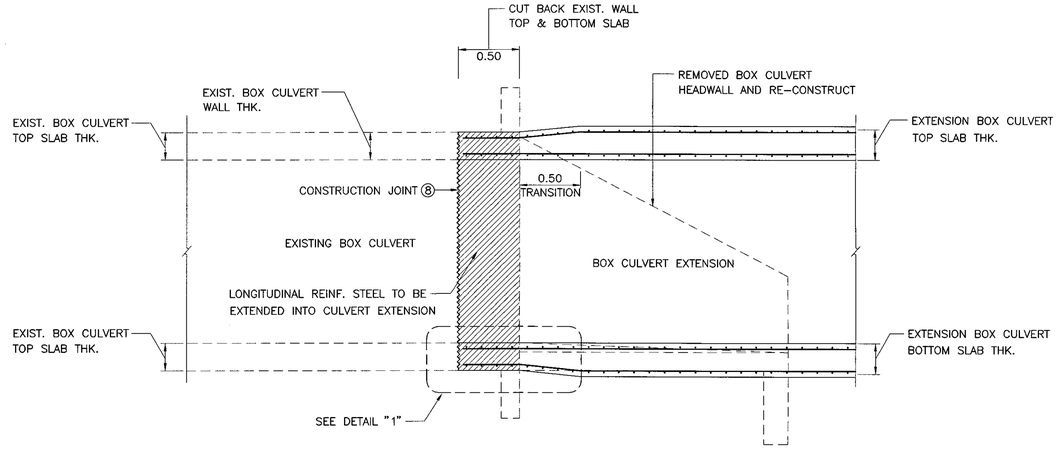

SECTION A – A
SCALE 1 : 25

INTERIOR MULTIPLE BOXES CULVERT PLAN
SCALE 1 : 25

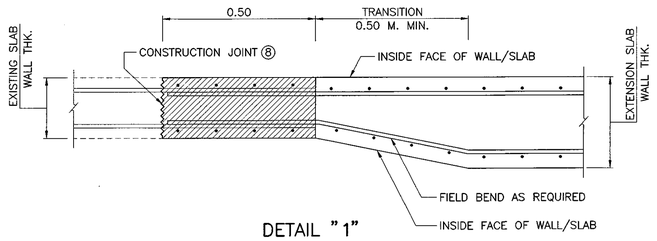

DETAIL "1"
SCALE 1 : 10

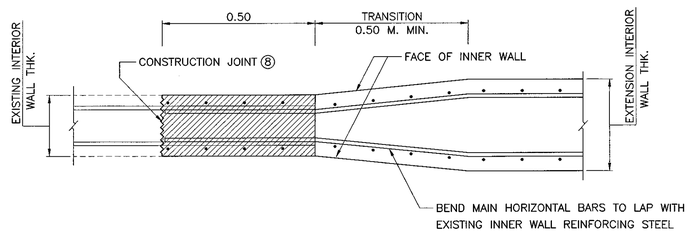

DETAIL "2"
SCALE 1 : 10

NOTES :

1. ALL DIMENSIONS SHOWN ARE IN METERS UNLESS OTHERWISE INDICATED.
2. DESIGN LIVE LOAD: HL-93.
3. A MINIMUM ULTIMATE COMPRESSIVE STRENGTH FOR A 150x150x150 MM. CUBE AT 28 DAYS AS FOLLOWS:
   - A) FOR RC. BOX CULVERT 30 MPa. (306 KG/CM^2)
   - B) FOR PRECAST BOX CULVERT 40 MPa. (408 KG/CM^2)
   - C) FOR LEAN CONCRETE 20 MPa. (204 KG/CM^2)
4. LOCATIONS OF LAP SPLICE OF REBARS SHALL BE APPROVED BY THE ENGINEER.
5. IN CASE OF SALINE PROTECTION, HIGH SULPHATE CONFORMING TO TIS 15 SHALL BE USED INSTEAD OF TYPE 1 PORTLAND CEMENT.
6. ALL FIGURES IN COLUMN MARK ✳ ARE APPLICABLE FOR SINGLE BOXES. ALL FIGURES IN COLUMN MARK ⊛ ARE APPLICABLE FOR MULTIPLE BOXES.
7. REMOVE EXISTING CONCRETE WHILE AVOIDING DAMAGE TO EXISTING REINFORCEMENT. CLEAN AND STRAIGHTEN EXISTING REFORCEMENT, LAP AND TIE ONTO EXTENSION REINFORCEMENT.
8. ⑧ THE SURFACE OF BOX CULVERT SHALL BE ROUGHENED AND CLEANED
9. THIS DRAWING IS USING IN CONJUNCTION WITH DWG. NO. BC-103

REF.	REVISION	SIGNATURE	DATE

KINGDOM OF THAILAND

MINISTRY OF TRANSPORT
DEPARTMENT OF HIGHWAYS

STANDARD DRAWING

R.C. BOX CULVERT EXTENSIONS CONNECTION DETAIL

DESIGNED : D.O.H. & CONSULTANTS	**CHECKED :** BUREAU OF LOCATION & DESIGN	**DATE :** OCT 2015
SUBMITTED : (DIRECTOR OF LOCATION & DESIGN BUREAU)		**SCALE :** AS SHOWN
		DWG NO. BC-109
APPROVED : (FOR DIRECTOR GENERAL)		**SHEET NO.** 325

D:\std dwg 2015\BC-109(REV00)

SECTION 4) RETAINING WALL

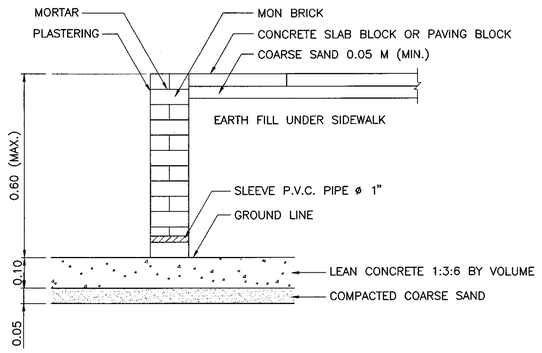

RETAINING WALL TYPE 1A MASONRY BRICK WALL
SCALE 1 : 10

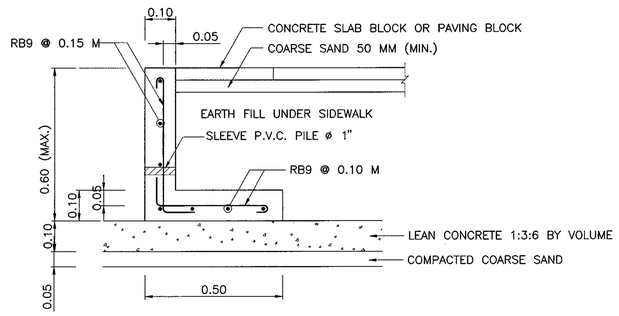

RETAINING WALL TYPE 1B CONCRETE WALL
SCALE 1 : 10

RETAINING WALL TYPE 2A (FOR SIDE WALK)

RETAINING WALL DIMENSION														
H (M)	0.61	0.70	0.80	0.90	1.00	1.10	1.20	1.30	1.40	1.50	1.60	1.70	1.80	1.90	2.00
B (M)	0.65	0.70	0.75	0.85	0.90	0.95	1.00	1.05	1.15	1.25	1.30	1.35	1.40	1.45	1.50
q_{all}(KPa)	30	33	35	37	40	43	47	50	53	54	57	60	63	66	70

RETAINING WALL TYPE 2B (FOR SIDE FILL)

RETAINING WALL DIMENSION														
H (M)	0.61	0.70	0.80	0.90	1.00	1.10	1.20	1.30	1.40	1.50	1.60	1.70	1.80	1.90	2.00
B (M)	0.85	0.95	1.00	1.05	1.15	1.20	1.25	1.30	1.40	1.50	1.60	1.70	1.85	1.95	2.15
q_{all}(KPa)	42	46	51	55	58	63	68	72	75	77	80	83	84	87	87

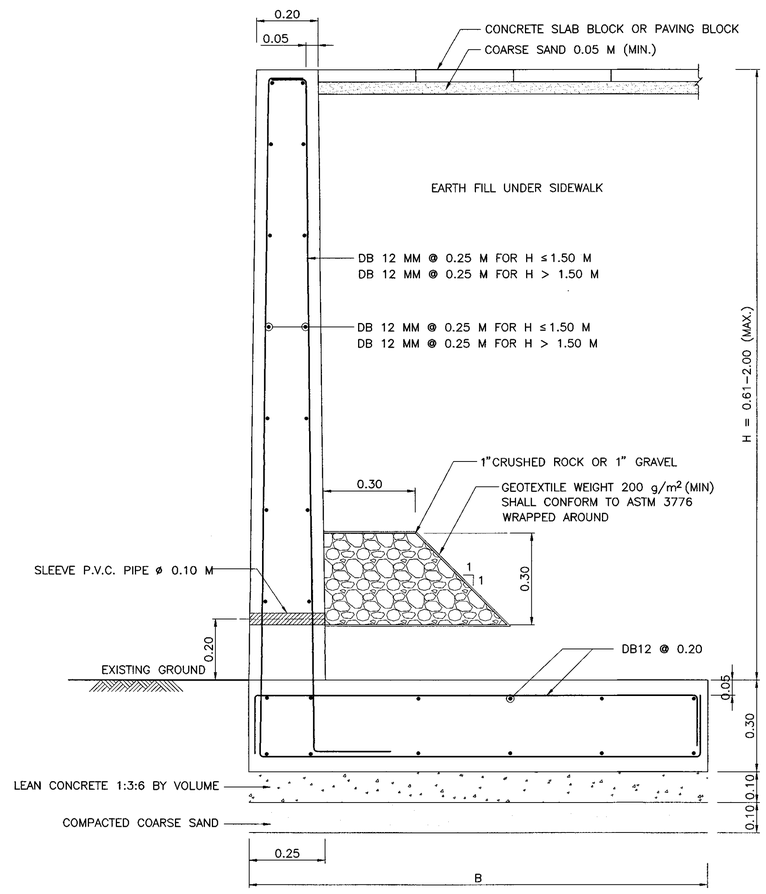

RETAINING WALL TYPE 2A
SCALE 1 : 10

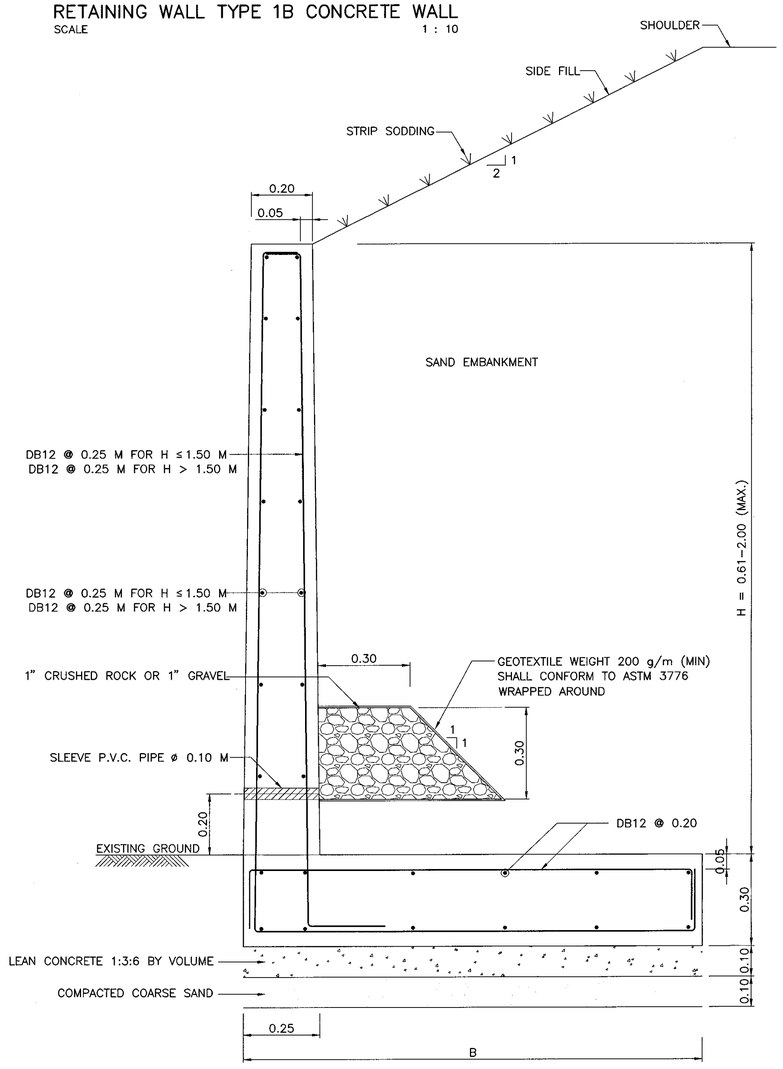

RETAINING WALL TYPE 2B
SCALE 1 : 10

NOTES:

1. ALL DIMENSION ARE IN METERS UNLESS OTHERWISE INDICATED.
2. CONCRETE SHALL HAVE A MINIMUM ULTIMATE COMPRESSIVE STRENGTH OF 35 MPa (357 Kg/cm^2) FOR 0.15x0.15x0.15 M CUBE AT 28 DAYS.
3. CONCRETE COVER SHALL BE 0.03 M EXCEPT FOR THE FOUNDATION STRUCTURE, WHICH CONCRETE COVER SHALL BE 0.05 IN CASE OF THE MARINE CLAY, CONCRETE COVER FOR THE OTHER PART OF THE WALL AND THE FOUNDATION FACING THE MARINE SOIL SHALL BE ADDED 0.025 M FROM THE DIMENSIONS SHOWN ON THIS DRAWING.
4. ALL REINFORCING STEEL SHALL BE INTERMEDIATE GRADE DEFORMED BAR (CONFORM TO TIS 24, SD 40) EXCEPT FOR BAR DIAMETER LESS THAN 12 MM WHICH MAY BE STRUCTURE GRADE (CONFORM TO TIS 20, SR 24).
5. IN CASE OF SPLICING, REINFORCEMENT SPLICING SHALL BE MADE BY BUTT-WELDING WHICH THE STRENGTH OF WELDED JOINT IS NOT LESS THAN THE ULTIMATE TENSILE STRENGTH OR BY LAPPING BARS WHICH THE LAP LENGTH SHALL NOT BE LESS THAN 20 TIMES THE BAR DIAMETER FOR THE INTERMEDIATE GRADE REINFORCING STEEL (40 TIMES THE BAR DIAMETERS FOR STRUCTURAL GRADE REINFORCING STEEL). LOCATIONS OF THE LAPPED BARS SHALL BE SPACED APART UNDER CONSIDERATION OF THE ENGINEER.
6. THE P.V.C. PIPE FOR THE SLEEVE SHALL CONFROM TO TIS. 17 CLASS 13.5. THE SLEEVE SHALL BE MADE AT THE CONNECTION POINT OF THE WATER SUPPLY DISTRIBUTION PIPE TO THE ROADSIDE BUILDING. IN CASE OF NO DISTRIBUTION PIPE OR NO ROADSIDE BUILDINGS, THE SLEEVE SHALL ALSO BE MADE, BUT AT THE POINTS EXPECTING FOR FUTURE WATER SUPPLY AS DIRECTED BY THE ENGINEER AND THE ENDS OF THE SLEEVE SHALL BE PLUGGED WITH P.V.C. PLUG WHEN NOT IN USE.

REF.	REVISION	SIGNATURE	DATE

KINGDOM OF THAILAND
MINISTRY OF TRANSPORT
DEPARTMENT OF HIGHWAYS

STANDARD DRAWING

RETAINING WALL

RETAINING WALL TYPE 1 AND 2

DESIGNED : D.O.H. & CONSULTANTS	**CHECKED :** BUREAU OF LOCATION & DESIGN	**DATE :** OCT 2015
SUBMITTED : (DIRECTOR OF LOCATION & DESIGN BUREAU)		**SCALE :** AS SHOWN
APPROVED : (FOR DIRECTOR GENERAL)		**DWG NO.** RT-101
		SHEET NO. 326

D:\std dwg 2015\RT-101(REV00)

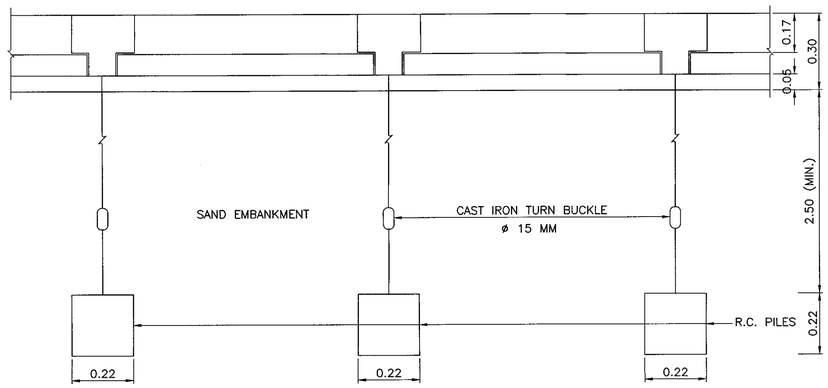

PLAN

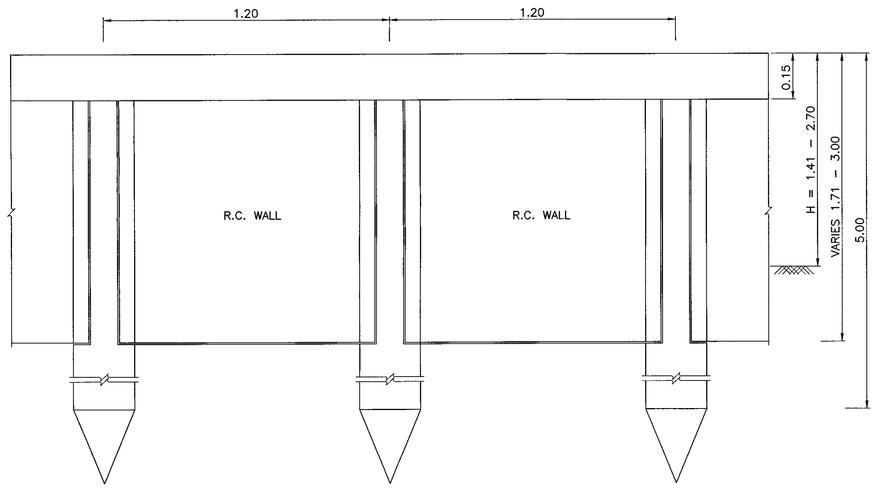

FRONT VIEW

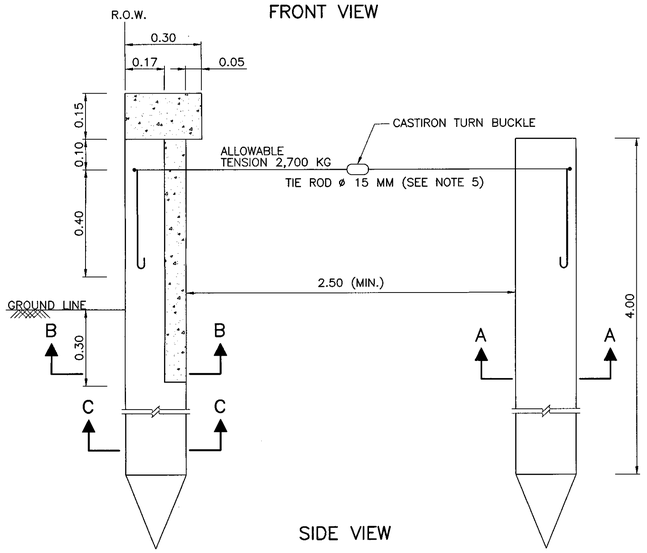

SIDE VIEW

RETAINING WALL TYPE 3A
SCALE 1 : 10

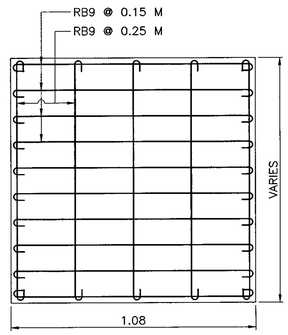

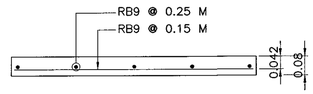

DETAIL OF R.C. WALL
SCALE 1 : 10

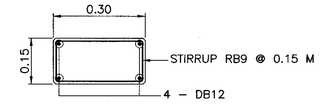

DETAIL OF CAP BEAM
SCALE 1 : 10

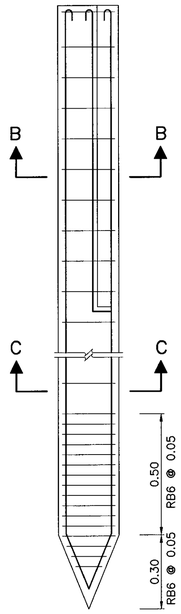

DETAIL OF PILE
SCALE 1 : 10

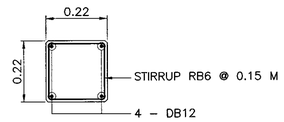

SECTION A – A
SCALE 1 : 10

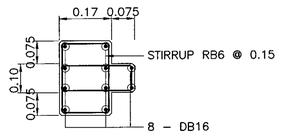

SECTION B – B
SCALE 1 : 10

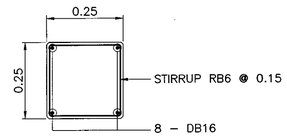

SECTION C – C
SCALE 1 : 10

NOTES:

1. ALL DIMENSION ARE IN METERS UNLESS OTHERWISE INDICATED.
2. CONCRETE SHALL HAVE A MINIMUM ULTIMATE COMPRESSIVE STRENGTH OF 35 MPa. (357 KG/CM^2) FOR 0.15x0.15x0.15 M CUBE AT 28 DAYS.
3. CONCRETE COVER SHALL BE 0.03 M EXCEPT FOR THE FOUNDATION STRUCTURE, WHICH CONCRETE COVER SHALL BE 0.05 IN CASE OF THE MARINE CLAY, CONCRETE COVER FOR THE OTHER PART OF THE WALL AND THE FOUNDATION FACING THE MARINE SOIL SHALL BE ADDED 0.025 M FROM THE DIMENSIONS SHOWN ON THIS DRAWING.
4. ALL REINFORCING STEEL SHALL BE INTERMEDIATE GRADE DEFORMED BAR (CONFORM TO TIS 24, SD 40) EXCEPT FOR BAR DIAMETER LESS THAN 12 MM. WHICH MAY BE STRUCTURE GRADE (CONFORM TO TIS 20, SR 24).
5. IN CASE OF SPLICING, REINFORCEMENT SPLICING SHALL BE MADE BY BUTT–WELDING WHICH THE STRENGTH OF WELDED JOINT IS NOT LESS THAN THE ULTIMATE TENSILE STRENGTH OR BY LAPPING BARS WHICH THE LAP LENGTH SHALL NOT BE LESS THAN 20 TIMES THE BAR DIAMETER FOR THE INTERMEDIATE GRADE REINFORCING STEEL (40 TIMES THE BAR DIAMETERS FOR STRUCTURAL GRADE REINFORCING STEEL). LOCATIONS OF THE LAPPED BARS SHALL BE SPACED APART UNDER CONSIDERATION OF THE ENGINEER.
6. THE P.V.C. PIPE FOR THE SLEEVE SHALL CONFROM TO TIS. 17 CLASS 13.5. THE SLEEVE SHALL BE MADE AT THE CONNECTION POINT OF THE WATER SUPPLY DISTRIBUTION PIPE TO THE ROADSIDE BUILDING. IN CASE OF NO DISTRIBUTION PIPE OR NO ROADSIDE BUILDINGS, THE SLEEVE SHALL ALSO BE MADE, BUT AT THE POINTS EXPECTING FOR FUTURE WATER SUPPLY AS DIRECTED BY THE ENGINEER AND THE ENDS OF THE SLEEVE SHALL BE PLUGGED WITH P.V.C. PLUG WHEN NOT IN USE.
7. CONCRETE FOR PILE SHALL HAVE AN MINIMUM ULTIMATE COMPRESSIVE STRENGTH OF 45 MPa(459 Kg/cm^2) FOR 0.15x0.15x0.15 M CUBE AT 28 DAYS.

REF.	REVISION	SIGNATURE	DATE

KINGDOM OF THAILAND

MINISTRY OF TRANSPORT
DEPARTMENT OF HIGHWAYS

STANDARD DRAWING

RETAINING WALL
RETAINING WALL TYPE 3A

DESIGNED : D.O.H. & CONSULTANTS	**CHECKED :** BUREAU OF LOCATION & DESIGN	**DATE :** OCT 2015
SUBMITTED : (DIRECTOR OF LOCATION & DESIGN BUREAU)		**SCALE :** AS SHOWN
APPROVED : (FOR DIRECTOR GENERAL)		**DWG NO.** RT–102
		SHEET NO. 327

D:\std dwg 2015\RT-102(REV00)

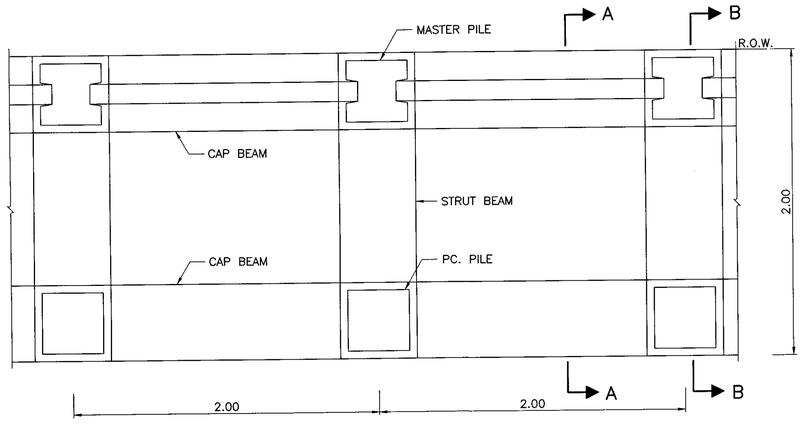

PLAN
SCALE 1 : 20

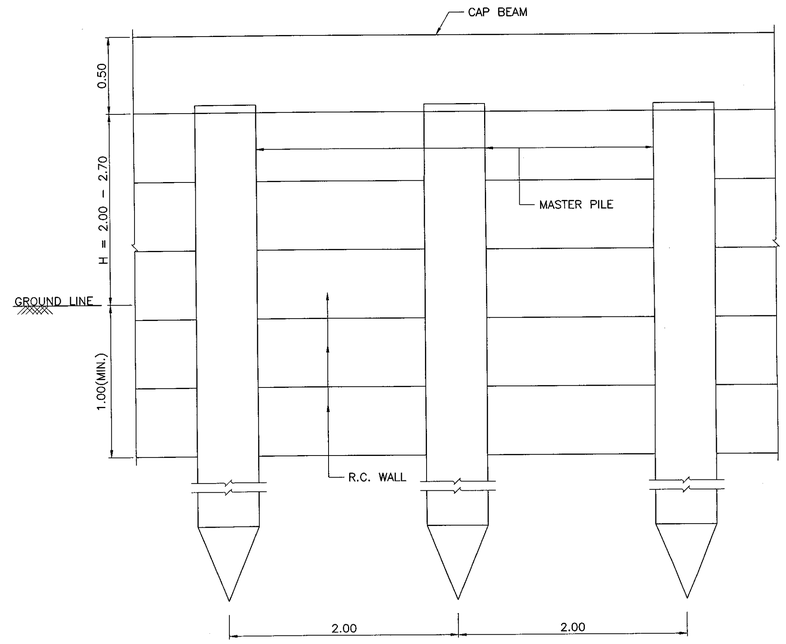

FRONT VIEW
SCALE 1 : 20

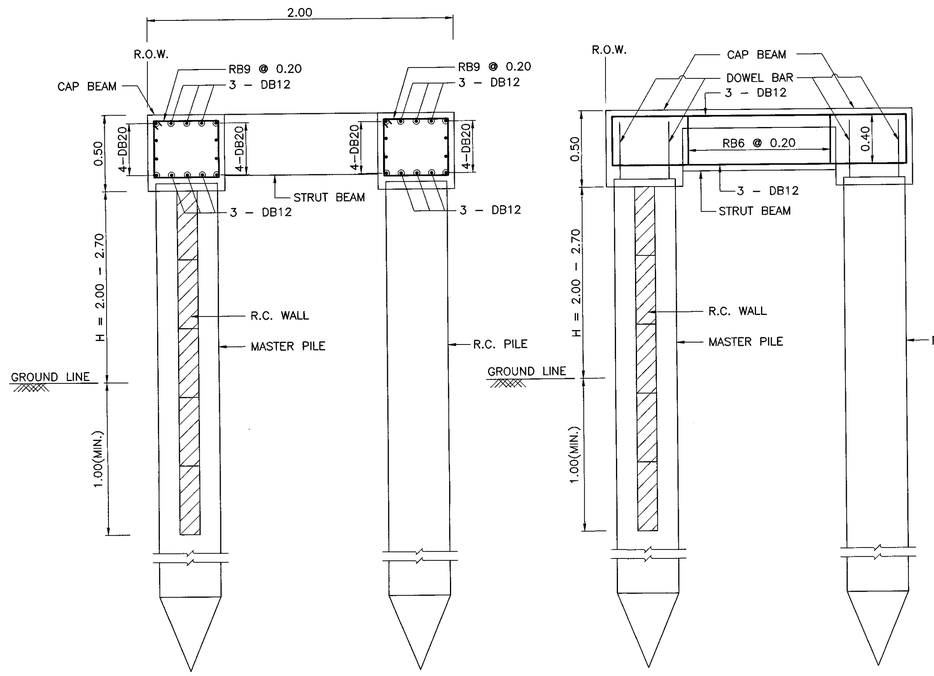

SECTION A – A
SCALE 1 : 20

SECTION B – B
SCALE 1 : 20

RETAINING WALL TYPE 3B
SCALE 1 : 20

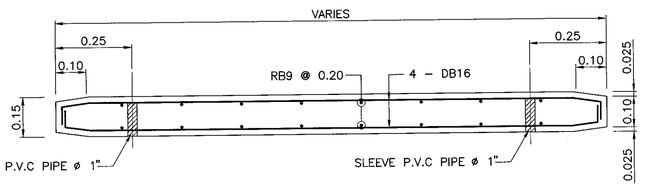

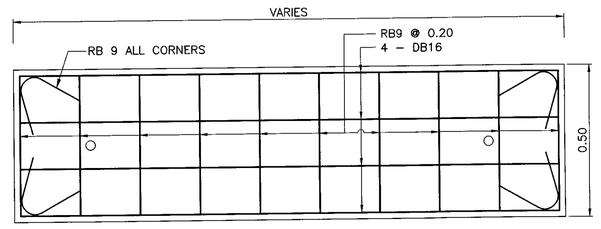

R.C. WALL
SCALE 1 : 20

NOTES:

1. ALL DIMENSION ARE IN METERS UNLESS OTHERWISE INDICATED.
2. R.C. CONCRETE SHALL HAVE A MINIMUM ULTIMATE COMPRESSIVE STRENGTH OF 35 MPa. (357 KG/CM^2) FOR 0.15x0.15x0.15 M CUBE AT 28 DAYS.
3. CONCRETE FOR R.C. AND PC. PILE SHALL HAVE ULTIMATE COMPRESSIVE STRENGTH AT LEAST 45 MPa (459 KG/CM^2) AND 35 MPa (357 KG/CM^2) FOR 0.15x0.15x0.15 M CUBE AT 28 DAYS, RESPECTIVELY
4. ALL REINFORCING STEEL SHALL BE INTERMEDIATE GRADE DEFORMED BAR (CONFORM TO TIS 24, SD 40) EXCEPT FOR BAR DIAMETER LESS THAN ø12 MM. WHICH MAY BE STRUCTURE GRADE. (CONFORM TO TIS 20, SR 24)
5. IN CASE OF SPLICING, REINFORCEMENT SPLICING SHALL BE MADE BY BUTT–WELDING WHICH THE STRENGTH OF WELDED JOINT IS NOT LESS THAN THE ULTIMATE TENSILE STRENGTH OR BY LAPPING BARS WHICH THE LAP LENGTH SHALL NOT BE LESS THAN 20 TIMES THE BAR DIAMETER FOR THE INTERMEDIATE GRADE REINFORCING STEEL (40 TIMES THE BAR DIAMETERS FOR STRUCTURAL GRADE REINFORCING STEEL) LOCATIONS OF THE LAPPED BARS SHALL BE SPACED APART UNDER CONSIDERATION OF THE ENGINEER.
6. CONCRETE COVER SHALL BE 0.03 M EXCEPT FOR THE FOUNDATION STRUCTURE THE CONCRETE COVER SHALL BE 0.05 IN CASE OF THE MARINE CLAY, CONCRETE COVER FOR THE OTHER PART OF THE WALL AND THE FOUNDATION FACING THE MARINE SOIL SHALL BE ADDED 0.025 M FROMTHE DIMENSIONS SHOWN ON THIS DRAWING.
7. THE P.V.C. PIPE FOR THE SLEEVE SHALL CONFROM TO TIS. 17 CLASS 13.5 THE SLEEVE SHALL BE MADE AT THE CONNECTION POINT OF THE WATER SUPPLY DISTRIBUTION PIPE TO THE ROADSIDE BUILDING IN CASE OF NO DISTRIBUTION PIPE OR NO ROADSIDE BUILDINGS, THE SLEEVE SHALL ALSO BE MADE, BUT AT THE POINTS EXPECTING FOR FUTURE WATER SUPPLY AS DIRECTED BY THE ENGINEER AND THE ENDS OF THE SLEEVE SHALL BE PLUGGED WITH P.V.C. PLUG WHEN NOT IN USE.
8. THE PILE SHALL HAVE A MINIMUM EMBEDMENT IN STIFF CLAY LAYER WHICH UNDRAIN SHEAR STRENGTH GREATER THAN 35 MPa (357 Kg/cm^2) NOT LESS THAN 2.00 M

TABLE 1 : DIMENSION OF PC. PILE AND R.C. PILE

D	H	L	PC. PILE (MM)						R.C. PILE (M)
(M)	(M)	(M)	B	a	b	c	d	e	B
–	2.00	7.00	260	65	85	50	80	70	0.26
5.00	2.70	5.00	260	65	85	90	85	90	0.26
10.00	2.70	15.00	300	75	105	90	100	100	0.30
15.00	2.70	20.00	350	85	115	120	115	120	0.35

D = SOFT CLAY THINCKNESS
L = LENGTH OF PILE

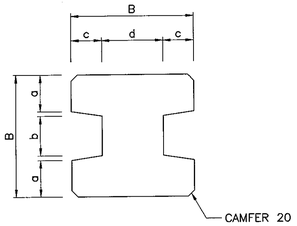

P.C. PILE
SCALE 1 : 10

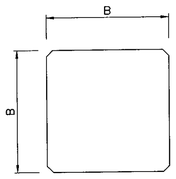

P.C. PILE
SCALE 1 : 10

REF.	REVISION	SIGNATURE	DATE

KINGDOM OF THAILAND

MINISTRY OF TRANSPORT
DEPARTMENT OF HIGHWAYS

STANDARD DRAWING
RETAINING WALL
RETAINING WALL TYPE 3B

DESIGNED : D.O.H. & CONSULTANTS	CHECKED : BUREAU OF LOCATION & DESIGN	DATE : OCT 2015
SUBMITTED : (DIRECTOR OF LOCATION & DESIGN BUREAU)		SCALE : AS SHOWN
APPROVED : (FOR DIRECTOR GENERAL)		DWG NO. RT–103
		SHEET NO. 328

D:\std dwg 2015\RT-103(REV00)

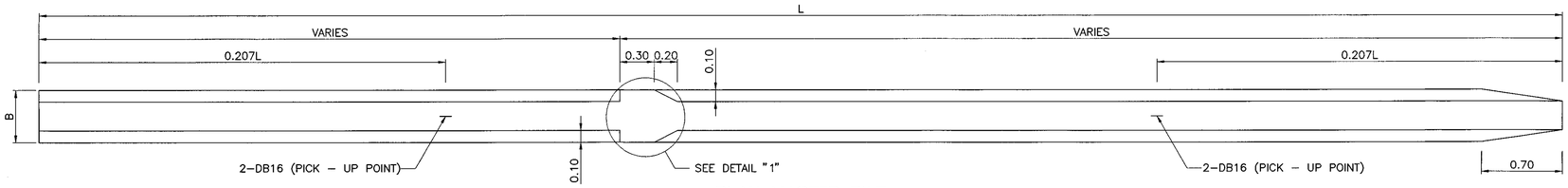

PLAN MASTER PILE
SCALE 1 : 25

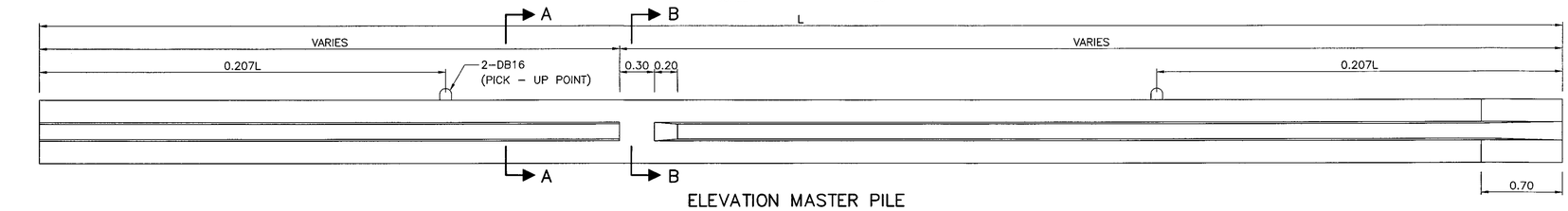

ELEVATION MASTER PILE
SCALE 1 : 25

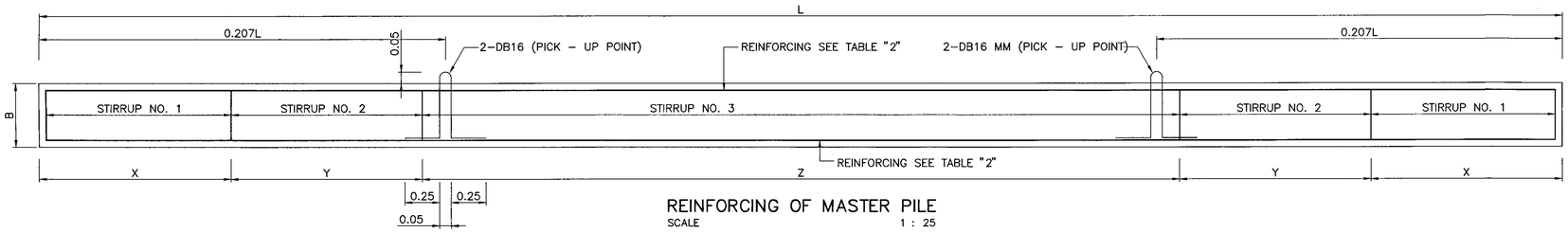

REINFORCING OF MASTER PILE
SCALE 1 : 25

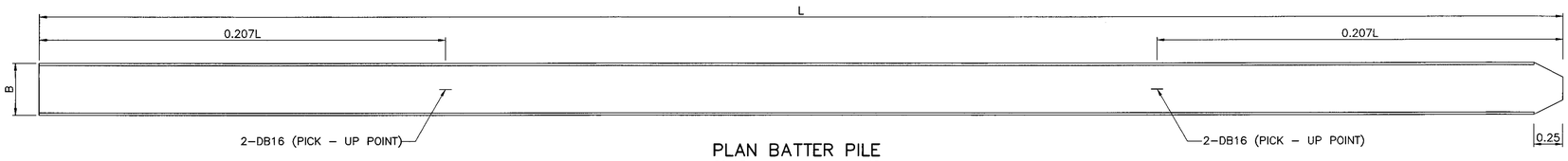

PLAN BATTER PILE
SCALE 1 : 25

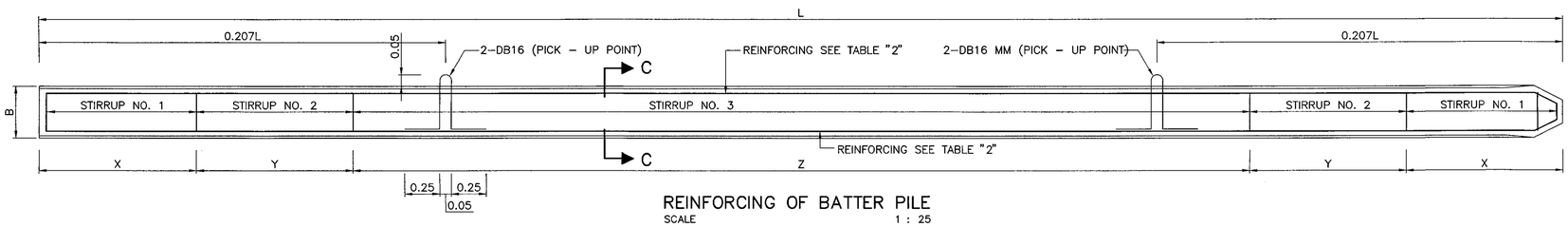

REINFORCING OF BATTER PILE
SCALE 1 : 25

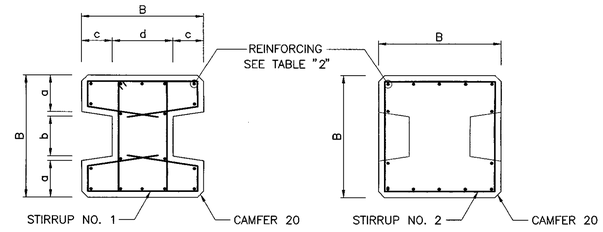

SECTION A – A
SCALE 1 : 10

SECTION B – B
SCALE 1 : 10

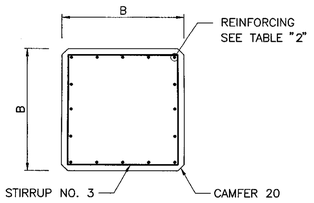

SECTION C – C
SCALE 1 : 10

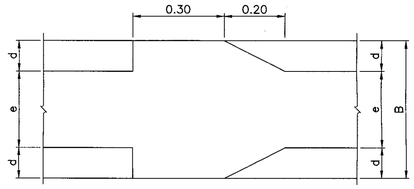

DETAIL "1"
SCALE 1 : 10

NOTES:

1. ALL DIMENSION ARE IN METERS UNLESS OTHERWISE INDICATED.
2. CONCRETE SHALL HAVE A MINIMUM ULTIMATE COMPRESSIVE STRENGTH OF 35 MPa (357 KG/CM^2) FOR 0.15x0.15x0.15 M CUBE AT 28 DAYS.
3. CONCRETE COVER SHALL BE 0.025 M EXCEPT FOR THE FOUNDATION STRUCTURE THE CONCRETE COVER SHALL BE 0.05 M IN CASE OF THE MARINE CLAY, CONCRETE COVER FOR THE OTHER PART OF THE WALL AND THE FOUNDATION FACING THE MARINE SOIL SHALL BE ADDED 0.025 M FROMTHE DIMENSIONS SHOWN ON THIS DRAWING.
4. ALL REINFORCING STEEL SHALL BE INTERMEDIATE GRADE DEFORMED BAR (CONFORM TO TIS 24, SD 30) EXCEPT FOR BAR DIAMETER LESS THAN 12 MM. WHICH MAY BE STRUCTURE GRADE. (CONFORM TO TIS 20, SR 24)
5. IN CASE OF SPLICING, REINFORCEMENT SPLICING SHALL BE MADE BY BUTT–WELDING WHICH THE STRENGTH OF WELDED JOINT IS NOT LESS THAN THE ULTIMATE TENSILE STRENGTH OR BY LAPPING BARS WHICH THE LAP LENGTH SHALL NOT BE LESS THAN 20 TIMES THE BAR DIAMETER FOR THE INTERMEDIATE GRADE REINFORCING STEEL (40 TIMES THE BAR DIAMETERS FOR STRUCTURAL GRADE REINFORCING STEEL) LOCATIONS OF THE LAPPED BARS SHALL BE SPACED APART UNDER CONSIDERATION OF THE ENGINEER.
6. PRECAST CONCRETE FOR PILE SHALL HAVE A MINIMUM ULTIMATE COMPRESSIVE STRENGTH OF STANDARD CUBE 0.15x0.15x0.15 M. AT 28 DAYS, NOT LESS THAN 45 MPa (459 KG/CM^2)
7. PRESTRESSING SHALL BE STRESS – RELIEVED WIRES CONFORMING TO TIS 95
8. THE PILE SHALL HAVE A MINIMUM EMBEDMENT IN STIFF CLAY LAYER WHICH UNDRAIN SHEAR STRENGTH GREATER THAN 35 MPa (357 Kg/cm^2) NOT LESS THAN 2.00 M

TABLE 1 : DIMENSION OF MASTER PILE AND BATTER PILE

D (M)	H (M)	PILE TYPE	PILE SECTION	PILE LENGTH (M)	FORCE M (tons–m)	FORCE V (tons)	FORCE N (tons)	PRESTRESS STEEL TOP	PRESTRESS STEEL BOTTOM	DOWEL BAR TOP	DOWEL BAR BOTTOM	STIRRUP NO. 1 X	STIRRUP NO. 1 STEEL	STIRRUP NO. 2 Y	STIRRUP NO. 2 STEEL	STIRRUP NO. 3 Z	STIRRUP NO. 3 STEEL
–	2.00	MASTER PILE	I–22x22	6.50	3.20	1.30	6.00	6–PC WIRE 5 MM	6–PC WIRE 5 MM	4–DB16	4–DB16	0.35	2–RB 6 @ 0.10	0.70	2–RB 6 @ 0.15	4.40	2–RB 6 @ 0.15
		BATTER PILE	Ø–22x22	6.50	3.80	1.50	5.50	8–PC WIRE 5 MM	8–PC WIRE 5 MM	3–DB20	3–DB20	0.35	2–RB 6 @ 0.10	0.70	2–RB 6 @ 0.15	4.40	2–RB 6 @ 0.15
5.00	2.70	MASTER PILE	I–26x26	10.00	4.50	3.50	8.90	7–PC WIRE 5 MM	7–PC WIRE 5 MM	3–DB16	3–DB16	0.40	2–RB 6 @ 0.10	0.80	2–RB 6 @ 0.15	7.60	2–RB 6 @ 0.15
		BATTER PILE	Ø–26x26	10.00	4.90	4.30	12.10	9–PC WIRE 5 MM	9–PC WIRE 5 MM	4–DB16	4–DB16	0.40	2–RB 6 @ 0.10	0.80	2–RB 6 @ 0.15	7.60	2–RB 6 @ 0.15
10.00	2.70	MASTER PILE	I–30x30	15.00	6.50	5.20	8.50	9–PC WIRE 5 MM	9–PC WIRE 5 MM	4–DB20	4–DB20	0.45	2–RB 6 @ 0.10	0.90	2–RB 6 @ 0.15	12.30	2–RB 6 @ 0.15
		BATTER PILE	Ø–30x30	15.00	6.10	7.40	18.50	13–PC WIRE 5 MM	13–PC WIRE 5 MM	3–DB16	3–DB16	0.45	2–RB 6 @ 0.10	0.90	2–RB 6 @ 0.15	12.30	2–RB 6 @ 0.15
15.00	2.70	MASTER PILE	I–35x35	20.00	9.50	7.70	8.90	12–PC WIRE 5 MM	12–PC WIRE 5 MM	3–DB20	3–DB20	0.55	2–RB 6 @ 0.05	1.05	2–RB 6 @ 0.10	16.80	2–RB 6 @ 0.10
		BATTER PILE	Ø–35x35	20.00	8.80	6.60	17.91	2–PC STAND 3/8" + 2–PC STAND 1/2"	2–PC STAND 3/8" + 2–PC STAND 1/2"	3–DB20	3–DB20	0.55	2–RB 6 @ 0.05	1.05	2–RB 6 @ 0.10	16.80	2–RB 6 @ 0.10

D = SOFT CLAY THINCKNESS (M)
H = HEIGHT OF RETAINING WALL (M)
M = MAXIMUM MOMENT (tons–m)
V = MAXIMUM SHEAR FORCE (tons)
N = MAXIMUM AXIAL FORCE (tons)

TABLE 1 : DIMENSION OF MASTER PILE AND BATTER PILE

D (M)	H (M)	L (M)	MASTER PILE (MM) B	a	b	c	d	e	BATTER PILE (M) B
–	2.00	7.00	220	65	85	50	80	70	0.26
5.00	2.70	10.00	260	65	85	90	85	90	0.26
10.00	2.70	15.00	300	75	105	90	100	100	0.30
15.00	2.70	20.00	350	85	115	120	115	120	0.35

D = SOFT CLAY THINCKNESS
H = HEIGHT OF RETAINING WALL
L = LENGTH OF PILE

REF.	REVISION	SIGNATURE	DATE

KINGDOM OF THAILAND

MINISTRY OF TRANSPORT
DEPARTMENT OF HIGHWAYS

STANDARD DRAWING

RETAINING WALL

RETAINING WALL TYPE 3B, PILE DETAILS

DESIGNED : D.O.H. & CONSULTANTS	CHECKED : BUREAU OF LOCATION & DESIGN	DATE : OCT 2015
SUBMITTED : (DIRECTOR OF LOCATION & DESIGN BUREAU)		SCALE : AS SHOWN
APPROVED : (FOR DIRECTOR GENERAL)		DWG NO. RT–104
		SHEET NO. 329

D:\std dwg 2015\RT-104(REV00)

TYPE	H	B	D	A	C1	C2	C3
4A	100	100	25	25	10	7.5	7.5
4B	200	175	30	30	10	10	10
4C	300	250	35	40	15	14	10
4C	400	300	40	45	15	13	15
4D	500	375	45	50	20	15	15
4D	600	450	50	60	25	20	15

NOTE : IN CASE THE HEIGHT IS IN THE INTERVAL OF THE HEIGHT GIVEN IN THE TABLE, THE VALUE D, A, C1, C2 AND C3 SHALL BE CALCULATED FOR THE HEIGHT, H BY LINEEAR RATIO COMPARING IN THE INTERVAL OF THE HEIGHT GIVEN. THE VALUE B SHALL BE CALCULATED IN THE SAME WAY IN CASE OF RETAINING WALL USING SPREAD FOOTING. USING THE VALUE B WHICH ARE GIVEN IN THIS TABLE FOR RETAINING WALL USING PILES. DIMENSIONS ARE IN CENTIMETERS.

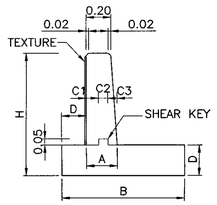

SIDE VIEW OF RETAINING WALL SHOWING POSITION AND DISTANCES OF SHEAR KEY
SCALE 1:25

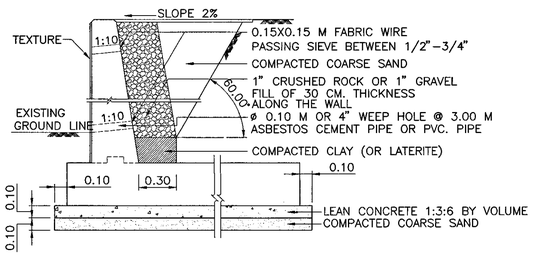

DETAIL OF BASE OF RETAINING WALL, WEEP HOLE AND EARTH BACKFILL
SCALE 1:25

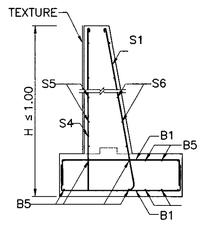

SECTION OF RETAINING WALL
RETAINING WALL TYPE 4A (H≤ 1.00 M)
SCALE 1:25

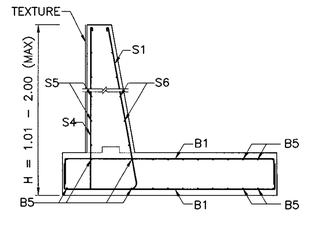

SECTION OF RETAINING WALL
RETAINING WALL TYPE 4B (H=1.01–2.00 M)
SCALE 1:25

REINFORCING STEEL FOR ONE LINEAR METER OF RETAINING WALL

BAR MARK	HEIGHT 6.00 M						HEIGHT 5.00 M						HEIGHT 4.00 M						HEIGHT 3.00 M						HEIGHT 2.00 M						HEIGHT 1.00 M					
	ø	@	MEASURED DISTANCE a	MEASURED DISTANCE b	LENGTH		ø	@	MEASURED DISTANCE a	MEASURED DISTANCE b	LENGTH		ø	@	MEASURED DISTANCE a	MEASURED DISTANCE b	LENGTH		ø	@	MEASURED DISTANCE a	MEASURED DISTANCE b	LENGTH		ø	@	MEASURED DISTANCE a	MEASURED DISTANCE b	LENGTH		ø	@	MEASURED DISTANCE a	MEASURED DISTANCE b	LENGTH	
REINFORCEMENT OF WALL																																				
S1	20	30	589.5	25	614.5	*	16	30	489.5	25	514.5	*	16	30	393.5	64	457.5	*	12	20	293	56.5	349.5	*	9	12	193	47	240	*	9	12	93	42	135	*
S2	20	10	341.5	25	366.5		16	10	315	25	340		16	10	215.5	64	279.5		12	20	115.5	56.5	172		–	–	–	–	–		–	–	–	–	–	
S3	20	20	141	25	166		16	20	139.5	25	164.5		–	–	–	–	–		–	–	–	–	–		–	–	–	–	–		–	–	–	–	–	
S4	9	20	589.5	0	589.5	*	9	20	489.5	0	489.5	*	9	20	393.5	0	393.5	*	9	20	293	0	293	*	9	20	193	0	193		9	20	93	0	93	*
S5	12	20	100	0	100		12	20	100	0	100		12	20	100	0	100		12	20	100	0	100		9	20	100	0	100		9	20	100	0	100	
S6	12	15	100	0	100		12	15	100	0	100		12	15	100	0	100		12	15	100	0	100		9	15	100	0	100		9	15	100	0	100	
S7	25	20	100	0	100		25	20	100	0	100		–	–	–	–	–		–	–	–	–	–		–	–	–	–	–		–	–	–	–	–	
B1	20	15	445	0	445	*	20	20	370	0	370	*	20	25	295	0	295	*	16	30	245	0	245	*	9	10	170	7.5	185	*	9	10	95	7.5	110	*
B2	20	15	277.5	0	277.5		20	20	270.5	0	270.5		20	25	182.5	0	182.5		16	30	132.5	0	132.5		–	–	–	–	–		–	–	–	–	–	
B3	16	15	177.5	0	177.5		16	15	170.5	0	170.5		–	–	–	–	–		–	–	–	–	–		–	–	–	–	–		–	–	–	–	–	
B4	20	25	177.5	0	177.5		20	30	177.5	0	177.5		–	–	–	–	–		–	–	–	–	–		–	–	–	–	–		–	–	–	–	–	
B5	12	10	100	0	100		12	12.5	100	0	100		12	12.5	100	0	100		12	15	100	0	100		9	10	100	0	100		9	10	100	0	100	
B6	25	–	100	0	100		25	–	100	0	100		–	–	–	–	–		–	–	–	–	–		–	–	–	–	–		–	–	–	–	–	

NOTES: ø BAR DIAMETER, MM
* DECREASING THE LENGTH OF BAR IN CASE THE HEIGHT OF WALL IS LESS THAN THE VALUE GIVEN
** OR AS SHOWN IN CROSS–SECTION MEASURED DISTANCE AND LENGTH DIMENSIONS ARE IN CENTIMETERS.

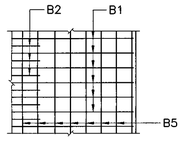

PLAN OF FOOTING SHOWING TOP REINFORCING

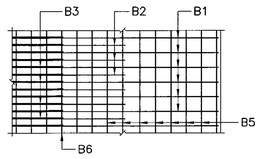

PLAN OF FOOTING SHOWING TOP REINFORCING

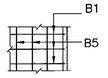

PLAN OF FOOTING SHOWING TOP REINFORCING

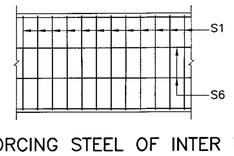

REINFORCING STEEL OF INTER WALL, HEIGHT ≤1.00 M

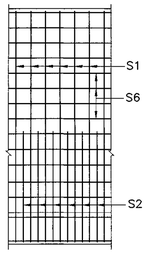

HEIGHT 3.01–4.00 M.

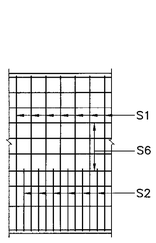

HEIGHT 2.01–3.00 M.

REINFORCING STEEL OF INTER WALL

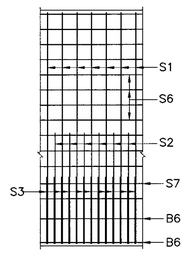

REINFORCING STEEL OF INTER WALL, HEIGHT 4.01–6.00 M.

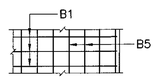

PLAN OF FOOTING SHOWING TOP REINFORCING

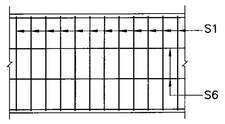

REINFORCING STEEL OF INTER WALL, HEIGHT 1.01–2.00 M.

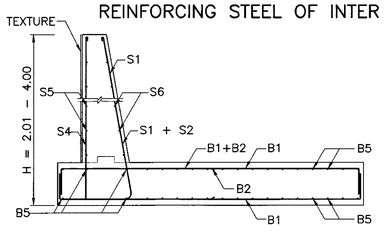

SECTION OF RETAINING WALL
RETAINING WALL TYPE 4C (H=2.01–4.00 M)
SCALE 1:25

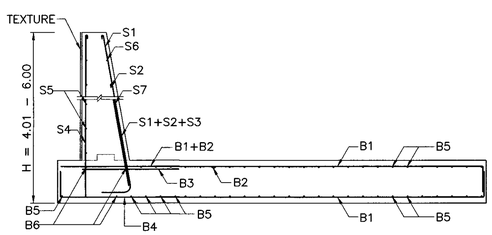

SECTION OF RETAINING WALL
RETAINING WALL TYPE 4D (H=4.01–6.00 M)
SCALE 1:25

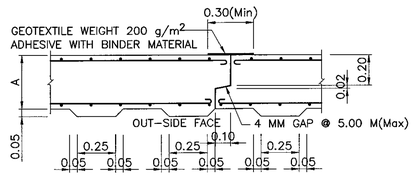

TEXTURE AND EXPANSION JOINT DETAIL OF WALL
SCALE 1 : 20

NOTES:

1) ALL DIMENSIONS ARE IN METERS UNLESS OTHERWISE INDICATED.
2) ANY PROBLEMS DUE TO THE DESIGNATIONS SHALL BE CONSIDERED AND DECIDED BY THE ENGINEER.
3) RETAINING WALLS SHOWN ON THIS DRWING SHALL BE USED FOR ROADWAY EMBANKMENT THAT IS PROPERLY DESIGNED.

REF.	REVISION	SIGNATURE	DATE

CONSTRUCTION SPECIFICATIONS

1. GENERAL NOTES FOR RETAINING WALL
   - 1.1 CONCRETE SHALL HAVE A MINIMUM ULTIMATE COMPRESSIVE STRENGTH OF 30 MPa. (306 KG/CM.^{2}) FOR 0.15x0.15x0.15 M CUBE AT 28 DAYS.
   - 1.2 AFTER THE FOUNDATION UNDERNEATH IS COMPACTED, THE LEAN CONCRETE SHALL BE PLACED FOR 0.10 M. THICK AS THE BASE WITH 0.10 M AROUND WIDER THAN THE FOUNDATION THE MIX DESIGN OF THE LEAN CONCRETE IS 1 : 3 : 6 BY VOLUMN.
   - 1.3 CONCRETE COVER SHALL BE 0.025 M EXCEPT FOR THE FOUNDATION STRUCTURE THE CONCRETE COVER SHALL BE 0.05 M. IN CASE OF THE MARINE CLAY, CONCRETE COVER FOR THE OTHER PART OF THE WALL AND THE FOUNDATION FACING THE MARINE SOIL SHALL BE ADDED 25 MM FROM THE DIMENSIONS SHOWN ON THIS DRAWING.
   - 1.4 EARTH BACKFILL SHALL BE SANDY SOIL OR GRAVEL SOIL OR ROCK OR OTHER SOIL IN THE CONSTRUCTION AREA HAVINGTHE SAME QUALITIES BY THE APPROVAL OF THE ENGINEER.
2. SPECIAL NOTES OF RETAINING WALL USING SPREAD FOOTING.
   - 2.1 THE ELEVATION OF THE FOUNDATION SHALL BE NOT LESS THAN 0.50 M FROM THE EXISTING GROUND LINE MEASURED FROM THE SURFACE OF THE LEAN CONCRETE IN NO.1.2
   - 2.2 EARTH BACKFILL SHALL BE SUPPORT THE ALLOWABLE LOAD NOT LESS THAN P. TONS/M^{2}AS TABLE FOLLOW:–

HEIGHT OF WALL (M)	5.0<H≤6.0	4.0<H≤5.0	3.0<H≤4.0	2.0<H≤3.0	H≤2.0
P, Tons/M^2	22.0	17.0	14.0	12.0	8

3. REINFORCING STEEL NOTE:
   ALL THOSE CONSIDER WITH IN NOTES NO.3
   - 3.1 ALL REINFORCING STEEL SHALL BE INTERMEDIATE GRADE DEFORMED BAR (CONFORM TO TIS 24, SD 30) EXCEPT FOR BAR DIAMETER IS LESS THAN 12 MM. WHICH MA BE STRUCTURE GRADE. (CONFORM TO TIS 20, SR 24)
   - 3.2 IN CASE OF SPLICING OF REINFORCEMENT SPLICING SHALL BE BY AROUND BUTT–WELDING WHICH THE STRENGTH OF WELDED JOINT IS NOT LESS THAN THE ULTIMATE TENSILE STRENGTH OR BY LAPPING BARS WHICH THE LAP LENGTH SHALL NOT BE LESS THAN ø20 TIMES THE BAR DIAMETER FOR THE INTERMEDIATE GRADE REINFORCING STEEL (40 TIMES THE BAR DIAMETERS FOR STRUCTURAL GRADE REINFORCING STEEL) LOCATION OF THE LAPPED BARS BE SPACED APART UNDER CONSIDERATION OF THE INSPECTOR.
4. THE P.V.C. PIPE FOR THE SLEEVE SHALL CONFROM TO TIS. 17 CLASS 13.5 THE SLEEVE SHALL BE MADE AT THE CONNECTION POINT OF THE WATER SUPPLY DISTRIBUTION PIPE TO THE ROADSIDE BUILDING IN CASE OF NO DISTRIBUTION PIPE OR NO ROADSIDE BUILDINGS, THE SLEEVE SHALL ALSO BE MADE, BUT AT THE POINTS EXPECTING FOR FUTURE WATER SUPPLY AS DIRECTED BY THE ENGINEER AND THE ENDS OF THE SLEEVE BE PLUGGED WITH P.V.C. PLUG WHEN NOT IN USE. AS DIRECTED BY THE ENGINEER AND THE ENDS OF THE SLEEVE BE PLUGGED WITH P.V.C. PLUG WHEN NOT IN USE.

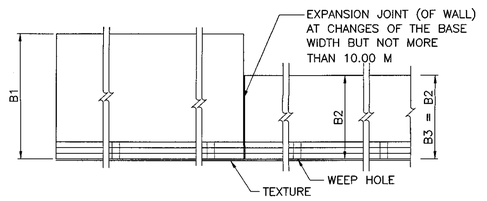

PLAN OF BASE OF RETAINING WALL USING PILE WHEN WALL HEIGHT VARIES LINEARLY WITH LENGTH
SCALE 1:10

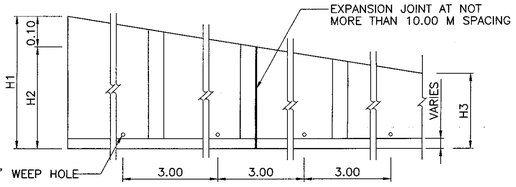

SIDE VIEW OF RETAINING WALL USING PIPE WHEN WALL HEIGHT VARIES LINEARLY WITH LENGTH
SCALE 1:

KINGDOM OF THAILAND

MINISTRY OF TRANSPORT
DEPARTMENT OF HIGHWAYS

STANDARD DRAWING
RETAINING WALL
RETAINING WALL TYPE 4

DESIGNED : D.O.H. & CONSULTANTS	CHECKED : BUREAU OF LOCATION & DESIGN	DATE : OCT 2015
SUBMITTED : (DIRECTOR OF LOCATION & DESIGN BUREAU)		SCALE : AS SHOWN
APPROVED : (FOR DIRECTOR GENERAL)		DWG NO. RT–105
		SHEET NO. 330

D:\std dwg 2015\RT-105(REV00)

TYPE	H	B	D	A	C1	C2	C3
5A	100	115	25	25	10	7.5	7.5
5B	200	175	30	30	10	10	10
5C	300	250	35	39	15	14	10
5D	400	350	40	45	15	13	15
5E	500	400	45	50	20	15	15
5F	600	480	50	60	25	20	15

NOTE : IN CASE THE HEIGHT IS IN THE INTERVAL OF THE HEIGHT GIVEN IN THE TABLE, THE VALUE D, A, C1, C2 AND C3 SHALL BE CALCULATED FOR THE HEIGHT, H BY LINEEAR RATIO COMPARING IN THE INTERVAL OF THE HEIGHT GIVEN. THE VALUE B SHALL BE CALCULATED IN THE SAME WAY IN CASE OF RETAINING WALL USING SPREAD FOOTING. USING THE VALUE B WHICH ARE GIVEN IN THIS TABLE FOR RETAINING WALL USING PILES. DIMENSIONS ARE IN CENTIMETERS.

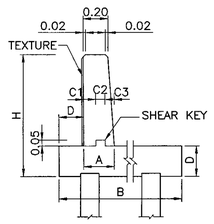

SIDE VIEW OF RETAINING WALL SHOWING POSITION AND DISTANCES OF SHEAR KEY
SCALE 1:25

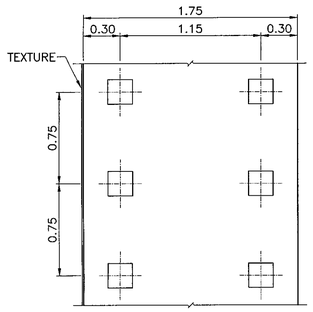

PLAN OF PILE
SCALE 1:25

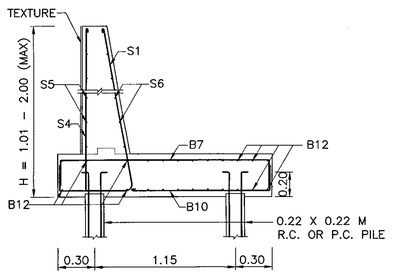

SECTION OF RETAINING WALL
RETAINING WALL TYPE 5B (H=1.01–2.00 M)
SCALE 1:25

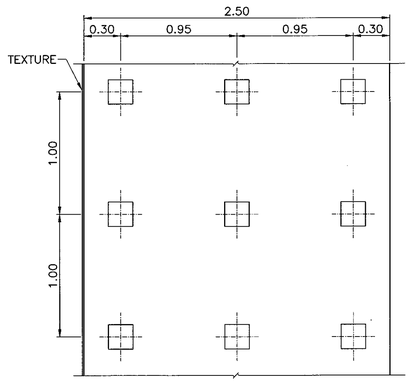

PLAN OF PILE
SCALE 1:25

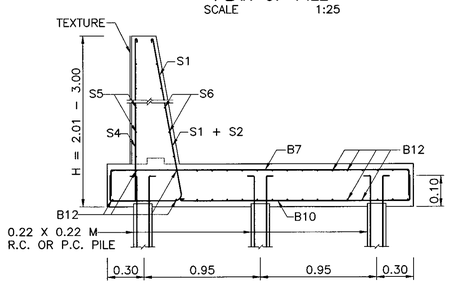

SECTION OF RETAINING WALL
RETAINING WALL TYPE 5C (H=2.01–3.00 M)
SCALE 1:25

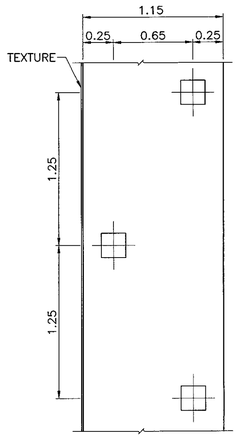

PLAN OF PILE
SCALE 1:25

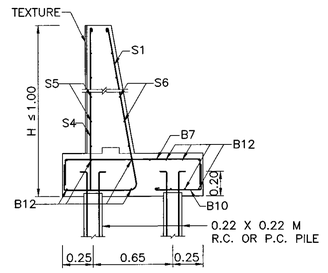

SECTION OF RETAINING WALL
RETAINING WALL TYPE 5A (H≤ 1.00 M)
SCALE 1:25

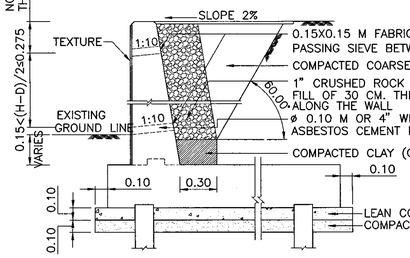

DETAIL OF BASE OF RETAINING WALL, WEEP HOLE AND EARTH BACKFILL
SCALE 1:25

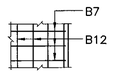

PLAN OF FOOTING SHOWING TOP REINFORCING

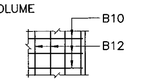

PLAN OF FOOTING SHOWING BOTTOM REINFORCING

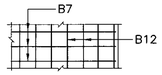

PLAN OF FOOTING SHOWING TOP REINFORCING

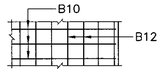

PLAN OF FOOTING SHOWING BOTTOM REINFORCING

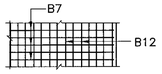

PLAN OF FOOTING SHOWING TOP REINFORCING

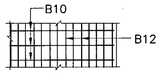

PLAN OF FOOTING SHOWING BOTTOM REINFORCING

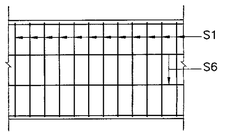

REINFORCING STEEL OF INTER WALL, HEIGHT ≤1.00 MM

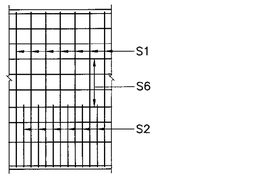

REINFORCING STEEL OF INTER WALL, HEIGHT 2.01–3.00 M.

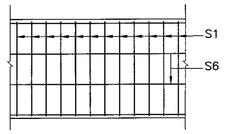

REINFORCING STEEL OF INTER WALL, HEIGHT 1.01–2.00 M.

REINFORCING STEEL FOR ONE LINEAR METER OF RETAINING WALL

BAR MARK	HEIGHT 6.00 M					HEIGHT 5.00 M					HEIGHT 4.00 M					HEIGHT 3.00 M					HEIGHT 2.00 M					HEIGHT 1.00 M				
	ø	@	MEASURED DISTANCE a	MEASURED DISTANCE b	LENGTH	ø	@	MEASURED DISTANCE a	MEASURED DISTANCE b	LENGTH	ø	@	MEASURED DISTANCE a	MEASURED DISTANCE b	LENGTH	ø	@	MEASURED DISTANCE a	MEASURED DISTANCE b	LENGTH	ø	@	MEASURED DISTANCE a	MEASURED DISTANCE b	LENGTH	ø	@	MEASURED DISTANCE a	MEASURED DISTANCE b	LENGTH
REINFORCEMENT OF WALL																														
S1	20	30	589.5*	25	614.5*	16	30	489.5*	25	514.5*	16	30	393.5*	64	457.5*	12	22.5	293*	56.5	349.5*	9	12.5	193*	47	240	9	12.5	93*	42	135*
S2	20	10	341.5	25	366.5	16	10	315	25	340	16	10	215.5	64	279.5	12	22.5	115.5	56.5	172	–	–	–	–	–	–	–	–	–	–
S3	20	20	141	25	166	16	20	139.5	25	164.5	–	–	–	–	–	–	–	–	–	–	–	–	–	–	–	–	–	–	–	–
S4	9	20	589.5*	0	589.5*	9	20	489.5*	0	489.5*	9	20	393.5*	0	393.5*	9	20	293*	0	293	9	20	193*	0	193	9	20	93*	0	93
S5	12	20	100	0	100	12	20	100	0	100	12	20	100	0	100	12	20	100	0	100	9	20	100	0	100	9	20	100	0	100
S6	12	15	100	0	100	12	15	100	0	100	12	20	100	0	100	12	20	100	0	100	9	15	100	0	100	9	15	100	0	100
S7	25	20	100	0	100	25	20	100	0	100	–	–	–	–	–	–	–	–	–	–	–	–	–	–	–	–	–	–	–	–
B7	25	15	445	0	445	25	20	395	0	395	20	30	345	0	345	16	12.5	245	0	245	9	10	170	7.5	185	9	12.5	95	7.5	110
B8	25	15	327.5	56.5	409	25	20	267.5	50.5	343	20	10	172.5	0	172.5	–	–	–	–	–	–	–	–	–	–	–	–	–	–	–
B9	16	17.5	295	49.5	369.5	16	30	217.5	43	285.5	–	–	–	–	–	–	–	–	–	–	–	–	–	–	–	–	–	–	–	–
B10	25	30	445	0	445	20	30	395	0	395	16	20	345	0	345	16	30	245	0	245	9	10	170	0	170	9	12.5	95	0	95
B11	25	30	277	0	277	20	30	215	0	215	–	–	–	–	–	–	–	–	–	–	–	–	–	–	–	–	–	–	–	–
B12	12	12.5	100	0	100	12	12.5	100	0	100	12	15**	100	0	100	12	17.5*	100	0	100	9	10**	100	0	100	9	12.5	100	0	100

NOTES: ø BAR DIAMETER, MM
* DECREASING THE LENGTH OF BAR IN CASE THE HEIGHT OF WALL IS LESS THAN THE VALUE GIVEN
** OR AS SHOWN IN CROSS–SECTION MEASURED DISTANCE AND LENGTH DIMENSIONS ARE IN CENTIMETERS.

CONSTRUCTION SPECIFICATIONS

1. GENERAL NOTES FOR RETAINING WALL
   - 1.1 CONCRETE SHALL HAVE A MINIMUM ULTIMATE COMPRESSIVE STRENGTH OF 30 MPa (306 KG/CM^2) FOR 0.15x0.15x0.15 M. CUBE AT 28 DAYS.
   - 1.2 AFTER THE FOUNDATION UNDERNEATH IS COMPACTED, THE LEAN CONCRETE SHALL BE PLACED FOR 0.10 M THICK AS THE BASE WITH 0.10 M AROUND WIDER THAN THE FOUNDATION THE MIX DESIGN OF THE LEAN CONCRETE IS 1 : 3 : 6 BY VOLUMN.
   - 1.3 CONCRETE COVER SHALL BE 0.03 M EXCEPT FOR THE FOUNDATION STRUCTURE THE CONCRETE COVER SHALL BE 0.05 M. IN CASE OF THE MARINE CLAY, CONCRETE COVER FOR THE OTHER PART OF THE WALL AND THE FOUNDATION FACING THE MARINE SOIL SHALL BE ADDED 0.025 M. FROM THE DIMENSIONS SHOWN ON THIS DRAWING.
   - 1.4 EARTH BACKFILL SHALL BE SANDY SOIL OR GRAVEL SOIL OR ROCK OR OTHER SOIL IN THE CONSTRUCTION AREA HAVING THE SAME QUALITIES BY THE APPROVAL OF THE ENGINEER.
2. SPECIAL NOTE FOR RETAINING WALL WITH PILE FOUNDATION
   - 2.1 THE ELEVATION OF THE FOUNDATION SHALL BE AT LEAST THE SAME LEVEL AS THE EXISTING GROUND MEASURED FROM THE SURFACE OF THE LEAN CONCRETE.
   - 2.2 VARIOUS SIZES OF RC. PILE GIVEN IN THIS DRAWING HAVE THE DETAIL AS FOLLOWS:–
     - 2.2.1 RC. PILE SIZE 0.40 x 0.40 M SHALL BE DRIVEN UNTIL IT REACHES ALLOWABLE LOAD WHICH MUST NOT BE LESS THAN 50 TONS IF THE DEPTH OF THE DRIVEN PILE IS LESS THAN 10.00 M, PILE LOAD TEST MUST BE PERFORMED TO ENSURE THAT ALLOWABLE TENSILE STRENGTH IS NOT LESS THAN 15 TONS.
     - 2.2.2 RC. PILE SIZE 0.22 x 0.22 M SHALL BE DRIVEN UNTIL IT REACHES ALLOWABLE LOAD WHICH MUST NOT BE LESS THAN 20 TONS IF THE DEPTH OF THE DRIVEN PILE IS LESS THAN 10.00 M PILE LOAD TEST MUST BE PERFORMED TO ENSURE THAT ALLOWABLE TENSILE STRENGTH IS NOT LESS THAN 4 TONS.
     - 2.2.3 TO TEST THE ALLOWABLE LOAD OF PILE, THE METHOD OF "STATIC PILE LOAD TEST" SHALL BE CONDUCTED AND THE CALCULATION OF ALLOWABLE LOAD CAN BE OBTAINED AS FOLLOW :
       - A. IN CASE OF THE TESTED PILE CAN RESIST MORE THAN GIVEN ALLOWABLE LOAD FOR PILE SIZE IN 3.2.1, 3.2.2 AND 3.2.3. THE AVERAGE SETTLEMENT RATIO OF PILE (TOTAL SETTLEMENT OF PILE HEAD AT THAT TIME/LOADING SUBJECTED TO PILE HEAD AT THE SAME TIME.) SHALL NOT EXCEED 20 MM/ PILE IN 24 HOURS THEN ALLOWABLE LOAD CAN BE OBTAINED AS A HALF OF SUBJECTED LOAD (FACTOR OF SAFETY = 2.0)
       - B. IN CASE OF SETTLEMENT RATIO EXCEEDING THE VALUE INDICATED IN A. OR INCREASING LOAD ON PILE HEAD UNTILITS FAILURE, ALLOWABLE LOAD IS CONTAINED BY DEVIDING THAT LOAD BY 2.5 (FACTOR OF SAFTY = 2.5) IN CASE OF STATIC PILE LOAD TEST CAN NOT BE PERFORMED, ALLOWABLE LOAD MIGHT BE COMPUTED BY PILE DRIVING FORMULAS SUCH AS HILEY FORMULA, JUNBO FORMULA OR DANISH FORMULA USING FACTOR OF SAFETY AT LEAST 3.0
     - 2.2.4 PRECAST CONCRETE FOR PILE SHALL HAVE ULTIMATE COMPRESSIVE STRENGTH AT LEAST 45 MPa. (459 KG/CM^2) FOR 0.15x0.15x0.15 M CUBE AT 28 DAYS AND CONCRETE SLUMP TEST CAN NOT EXCEED 0.08 M
     - 2.2.5 BEFORE CONSTURCTION OF BASE OF RETAINING WALL, THE TOP OF PILE SHALL BE CHISELED AND BEND THE MAIN REINFORCING STELL AS SHOWN IN THE DRAWING OR USE THE METHOD OF WELDING THE REINFORCING STEEL WITH THE SAME SIZE OF STEEL OF WELDING THE REINFORCING STEEL WITH THE SAME SIZE OF STEEL AS SHOWN IN THE DRAWING.
     - 2.2.6 FOR PILE SIZE 0.40 x 0.40 M USING PILE TIP EITHER TYPE A OR B DEPENDS ON OWNER DIVISION.
3. REINFORCING STEEL NOTE:
   - 3.1 ALL REINFORCING STEEL SHALL BE INTERMEDIATE GRADE DEFORMED BAR (CONFORM TO TIS 24, SD 40) EXCEPT FOR BAR DIAMETER IS LESS THAN 12 MM WHICH MA BE STRUCTURE GRADE. (CONFORM TO TIS 20, SR 24)
   - 3.2 IN CASE OF SPLICING OF REINFORCEMENT SPLICING SHALL BE BY AROUND BUTT–WELDING WHICH THE STRENGTH OF WELDED JOINT IS NOT LESS THAN THE ULTIMATE TENSILE STRENGTH OR BY LAPPING BARS WHICH THE LAP LENGTH SHALL NOT BE LESS THAN ø20 TIMES THE BAR DIAMETER FOR THE INTERMEDIATE GRADE REINFORCING STEEL (40 TIMES THE BAR DIAMETERS FOR STRUCTURAL GRADE REINFORCING STEEL) LOCATION OF THE LAPPED BARS BE SPACED APART UNDER CONSIDERATION OF THE INSPECTOR.
4. THE P.V.C. PIPE FOR THE SLEEVE SHALL CONFROM TO TIS. 17 CLASS 13.5 THE SLEEVE SHALL BE MADE AT THE CONNECTION POINT OF THE WATER SUPPLY DISTRIBUTION PIPE TO THE ROADSIDE BUILDING IN CASE OF NO DISTRIBUTION PIPE OR NO ROADSIDE BUILDINGS, THE SLEEVE SHALL ALSO BE MADE, BUT AT THE POINTS EXPECTING FOR FUTURE WATER SUPPLY AS DIRECTED BY THE ENGINEER AND THE ENDS OF THE SLEEVE BE PLUGGED WITH P.V.C. PLUG WHEN NOT IN USE.

NOTES:

1) ALL DIMENSIONS ARE IN METERS UNLESS OTHERWISE INDICATED.
2) ANY PROBLEMS DUE TO THE DESIGNATIONS SHALL BE CONSIDERED AND DECIDED BY THE ENGINEER.
3) RETAINING WALLS SHOWN ON THIS DRWING SHALL BE USED FOR ROADWAY EMBANKMENT THAT IS PROPERLY DESIGNED.
4) DETAIL OF TEXTURE AND EXPANSION JOINT SHOWN DRAWING NO. RT–107
5) PLAN AND SECTION OF RETAINING WALL H>3.00 M. SHOWN DRAWING NO. RT–107

KINGDOM OF THAILAND
MINISTRY OF TRANSPORT
DEPARTMENT OF HIGHWAYS

STANDARD DRAWING
RETAINING WALL
RETAINING WALL TYPE 5 (H≤3.00 M)

DESIGNED : D.O.H. & CONSULTANTS	CHECKED : BUREAU OF LOCATION & DESIGN	DATE : OCT 2015
SUBMITTED : (DIRECTOR OF LOCATION & DESIGN BUREAU)		SCALE : AS SHOWN
APPROVED : (FOR DIRECTOR GENERAL)		DWG NO. RT–106
		SHEET NO. 331

REF.	REVISION	SIGNATURE	DATE

D:\std dwg 2015\RT-106(REV00)

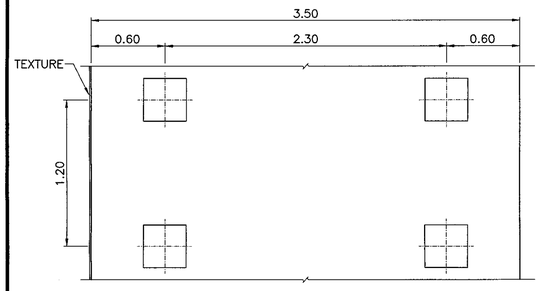

PLAN OF PILE
SCALE 1:25

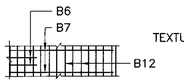

PLAN OF FOOTING SHOWING
TOP REINFORCING

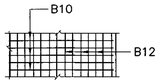

PLAN OF FOOTING SHOWING
BOTTOM REINFORCING

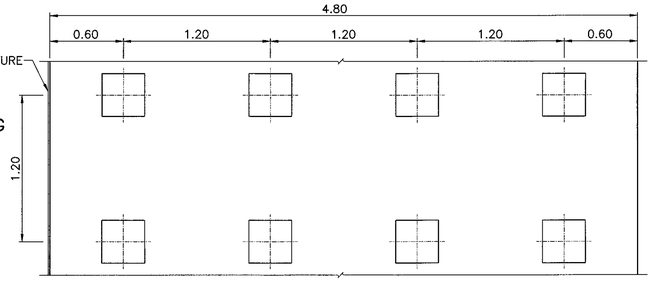

PLAN OF PILE
SCALE 1:25

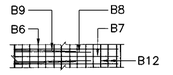

PLAN OF FOOTING SHOWING
TOP REINFORCING

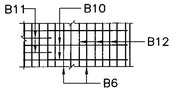

PLAN OF FOOTING SHOWING
BOTTOM REINFORCING

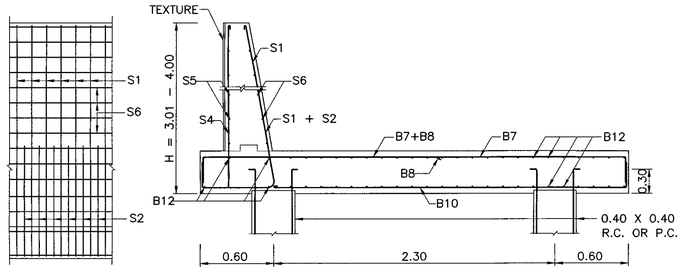

REINFORCING STEEL OF INTER WALL,
HEIGHT 3.01–4.00 M.

SECTION OF RETAINING WALL

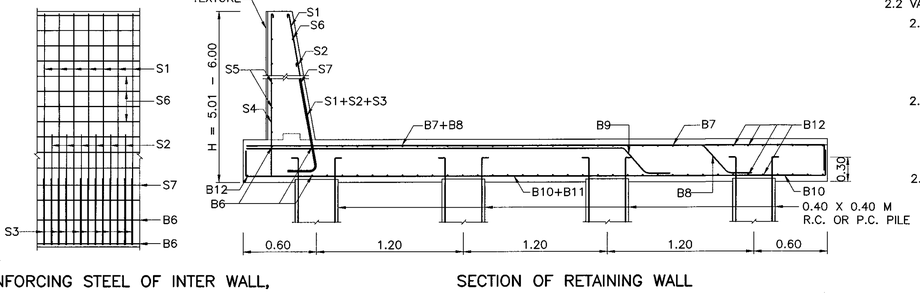

REINFORCING STEEL OF INTER WALL,
HEIGHT 5.01–6.00 M.

SECTION OF RETAINING WALL

RETAINING WALL TYPE 5D (H=3.01–4.00 M)
SCALE 1:25

RETAINING WALL TYPE 5F (H=5.01–6.00 M)
SCALE 1:25

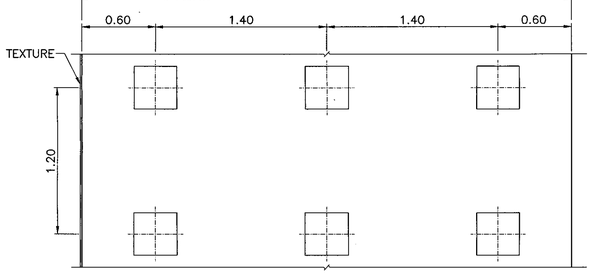

PLAN OF PILE
SCALE 1:25

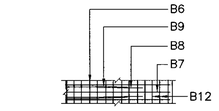

PLAN OF FOOTING SHOWING
TOP REINFORCING

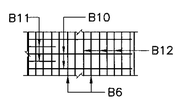

PLAN OF FOOTING SHOWING
BOTTOM REINFORCING

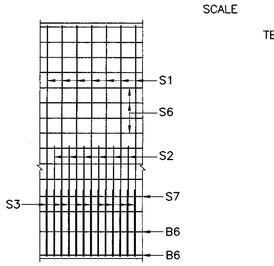

REINFORCING STEEL OF INTER WALL,
HEIGHT 4.01–5.00 M.

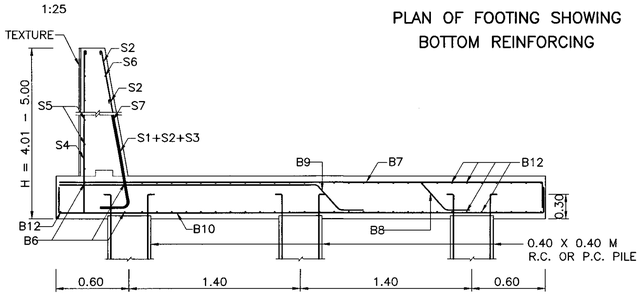

SECTION OF RETAINING WALL

RETAINING WALL TYPE 5E (H=4.01–5.00 M.)
SCALE 1:25

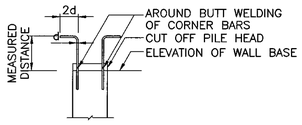

DETAIL OF CORNER BAR AT PILE HEAD
SCALE 1:10

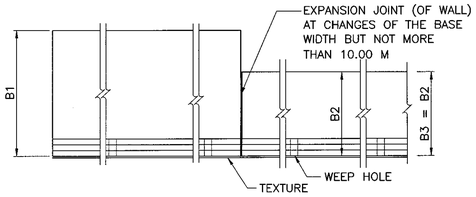

PLAN OF BASE OF RETAINING WALL USING PILE
WHEN WALL HEIGHT VARIES LINEARLY WITH LENGTH
SCALE 1:10

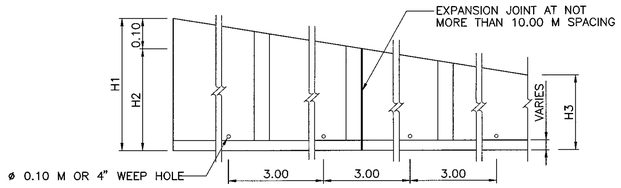

SIDE VIEW OF RETAINING WALL USING PIPE
WHEN WALL HEIGHT VARIES LINEARLY WITH LENGTH
SCALE 1:10

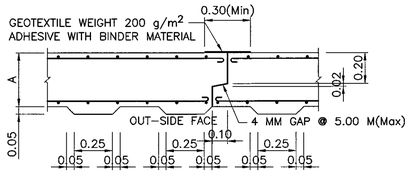

TEXTURE AND EXPANSION JOINT DETAIL OF WALL
SCALE 1 : 20

CONSTRUCTION SPECIFICATIONS

1. GENERAL NOTES FOR RETAINING WALL
   - 1.1 CONCRETE SHALL HAVE A MINIMUM ULTIMATE COMPRESSIVE STRENGTH OF 30 MPa (306 KG/CM^2) FOR 0.15x0.15x0.15 M. CUBE AT 28 DAYS.
   - 1.2 AFTER THE FOUNDATION UNDERNEATH IS COMPACTED, THE LEAN CONCRETE SHALL BE PLACED FOR 0.10 M THICK AS THE BASE WITH 0.10 M AROUND WIDER THAN THE FOUNDATION THE MIX DESIGN OF THE LEAN CONCRETE IS 1 : 3 : 6 BY VOLUMN.
   - 1.3 CONCRETE COVER SHALL BE 0.03 M EXCEPT FOR THE FOUNDATION STRUCTURE THE CONCRETE COVER SHALL BE 0.05 M. IN CASE OF THE MARINE CLAY, CONCRETE COVER FOR THE OTHER PART OF THE WALL AND THE FOUNDATION FACING THE MARINE SOIL SHALL BE ADDED 0.025 M. FROM THE DIMENSIONS SHOWN ON THIS DRAWING.
   - 1.4 EARTH BACKFILL SHALL BE SANDY SOIL OR GRAVEL SOIL OR ROCK OR OTHER SOIL IN THE CONSTRUCTION AREA HAVING THE SAME QUALITIES BY THE APPROVAL OF THE ENGINEER.
2. SPECIAL NOTE FOR RETAINING WALL WITH PILE FOUNDATION
   - 2.1 THE ELEVATION OF THE FOUNDATION SHALL BE AT LEAST THE SAME LEVEL AS THE EXISTING GROUND MEASURED FROM THE SURFACE OF THE LEAN CONCRETE.
   - 2.2 VARIOUS SIZES OF RC. PILE GIVEN IN THIS DRAWING HAVE THE DETAIL AS FOLLOWS:–
     - 2.2.1 RC. PILE SIZE 0.40 x 0.40 M SHALL BE DRIVEN UNTIL IT REACHES ALLOWABLE LOAD WHICH MUST NOT BE LESS THAN 50 TONS IF THE DEPTH OF THE DRIVEN PILE IS LESS THAN 10.00 M, PILE LOAD TEST MUST BE PERFORMED TO ENSURE THAT ALLOWABLE TENSILE STRENGTH IS NOT LESS THAN 15 TONS.
     - 2.2.2 RC. PILE SIZE 0.22 x 0.22 M SHALL BE DRIVEN UNTIL IT REACHES ALLOWABLE LOAD WHICH MUST NOT BE LESS THAN 20 TONS IF THE DEPTH OF THE DRIVEN PILE IS LESS THAN 10.00 M PILE LOAD TEST MUST BE PERFORMED TO ENSURE THAT ALLOWABLE TENSILE STRENGTH IS NOT LESS THAN 4 TONS.
     - 2.2.3 TO TEST THE ALLOWABLE LOAD OF PILE, THE METHOD OF "STATIC PILE LOAD TEST" SHALL BE CONDUCTED AND THE CALCULATION OF ALLOWABLE LOAD CAN BE OBTAINED AS FOLLOW :
       - A. IN CASE OF THE TESTED PILE CAN RESIST MORE THAN GIVEN ALLOWABLE LOAD FOR PILE SIZE IN 3.2.1, 3.2.2 AND 3.2.3. THE AVERAGE SETTLEMENT RATIO OF PILE (TOTAL SETTLEMENT OF PILE HEAD AT THAT TIME/LOADING SUBJECTED TO PILE HEAD AT THE SAME TIME.) SHALL NOT EXCEED 20 MM/ PILE IN 24 HOURS THEN ALLOWABLE LOAD CAN BE OBTAINED AS A HALF OF SUBJECTED LOAD (FACTOR OF SAFETY = 2.0)
       - B. IN CASE OF SETTLEMENT RATIO EXCEEDING THE VALUE INDICATED IN A. OR INCREASING LOAD ON PILE HEAD UNTILITS FAILURE, ALLOWABLE LOAD IS CONTAINED BY DEVIDING THAT LOAD BY 2.5 (FACTOR OF SAFTY = 2.5) IN CASE OF STATIC PILE LOAD TEST CAN NOT BE PERFORMED, ALLOWABLE LOAD MIGHT BE COMPUTED BY PILE DRIVING FORMULAS SUCH AS HILEY FORMULA, JUNBO FORMULA OR DANISH FORMULA USING FACTOR OF SAFETY AT LEAST 3.0
     - 2.2.4 PRECAST CONCRETE FOR PILE SHALL HAVE ULTIMATE COMPRESSIVE STRENGTH AT LEAST 45 MPa. (459 KG/CM^2) FOR 0.15x0.15x0.15 M CUBE AT 28 DAYS AND CONCRETE SLUMP TEST CAN NOT EXCEED 0.08 M
     - 2.2.5 BEFORE CONSTURCTION OF BASE OF RETAINING WALL, THE TOP OF PILE SHALL BE CHISELED AND BEND THE MAIN REINFORCING STELL AS SHOWN IN THE DRAWING OR USE THE METHOD OF WELDING THE REINFORCING STEEL WITH THE SAME SIZE OF STEEL OF WELDING THE REINFORCING STEEL WITH THE SAME SIZE OF STEEL AS SHOWN IN THE DRAWING.
     - 2.2.6 FOR PILE SIZE 0.40 x 0.40 M USING PILE TIP EITHER TYPE A OR B DEPENDS ON OWNER DIVISION.
3. REINFORCING STEEL NOTE:
   - 3.1 ALL REINFORCING STEEL SHALL BE INTERMEDIATE GRADE DEFORMED BAR (CONFORM TO TIS 24, SD 40) EXCEPT FOR BAR DIAMETER IS LESS THAN 12 MM WHICH MA BE STRUCTURE GRADE. (CONFORM TO TIS 20, SR 24)
   - 3.2 IN CASE OF SPLICING OF REINFORCEMENT SPLICING SHALL BE BY AROUND BUTT–WELDING WHICH THE STRENGTH OF WELDED JOINT IS NOT LESS THAN THE ULTIMATE TENSILE STRENGTH OR BY LAPPING BARS WHICH THE LAP LENGTH SHALL NOT BE LESS THAN ø20 TIMES THE BAR DIAMETER FOR THE INTERMEDIATE GRADE REINFORCING STEEL (40 TIMES THE BAR DIAMETERS FOR STRUCTURAL GRADE REINFORCING STEEL) LOCATION OF THE LAPPED BARS BE SPACED APART UNDER CONSIDERATION OF THE INSPECTOR.
4. THE P.V.C. PIPE FOR THE SLEEVE SHALL CONFROM TO TIS. 17 CLASS 13.5 THE SLEEVE SHALL BE MADE AT THE CONNECTION POINT OF THE WATER SUPPLY DISTRIBUTION PIPE TO THE ROADSIDE BUILDING IN CASE OF NO DISTRIBUTION PIPE OR NO ROADSIDE BUILDINGS, THE SLEEVE SHALL ALSO BE MADE, BUT AT THE POINTS EXPECTING FOR FUTURE WATER SUPPLY AS DIRECTED BY THE ENGINEER AND THE ENDS OF THE SLEEVE BE PLUGGED WITH P.V.C. PLUG WHEN NOT IN USE.

NOTES:

1) ALL DIMENSIONS ARE IN METERS UNLESS OTHERWISE INDICATED.
2) ANY PROBLEMS DUE TO THE DESIGNATIONS SHALL BE CONSIDERED AND DECIDED BY THE ENGINEER.
3) RETAINING WALLS SHOWN ON THIS DRWING SHALL BE USED FOR ROADWAY EMBANKMENT THAT IS PROPERLY DESIGNED.
4) DETAIL OF REINFORCING STEEL SHOWN DRAWING NO. RT–106

REF.	REVISION	SIGNATURE	DATE

KINGDOM OF THAILAND
MINISTRY OF TRANSPORT
DEPARTMENT OF HIGHWAYS

STANDARD DRAWING
RETAINING WALL
RETAINING WALL TYPE 5 (3.00< H ≤6.00 M)

DESIGNED : D.O.H. & CONSULTANTS	**CHECKED :** BUREAU OF LOCATION & DESIGN	**DATE :** OCT 2015
SUBMITTED : (DIRECTOR OF LOCATION & DESIGN BUREAU)		**SCALE :** AS SHOWN
APPROVED : (FOR DIRECTOR GENERAL)		**DWG NO.** RT–107
		SHEET NO. 332

D:\std dwg 2015\RT-107(REV00)

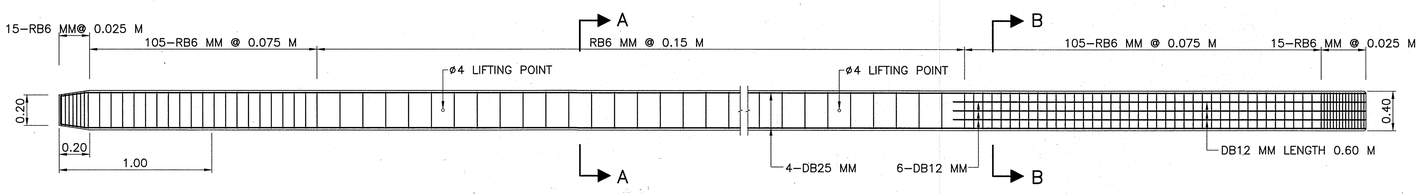

REINFORCING DETAIL OF 0.40X0.40 M PILE
SCALE 1 : 20

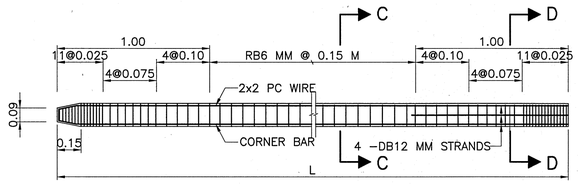

REINFORCING DETAIL OF 0.22X0.22 M
SCALE 1 : 20

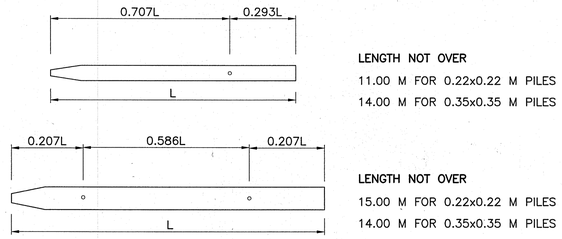

LENGTH NOT OVER
11.00 M FOR 0.22x0.22 M PILES
14.00 M FOR 0.35x0.35 M PILES

LENGTH NOT OVER
15.00 M FOR 0.22x0.22 M PILES
14.00 M FOR 0.35x0.35 M PILES

PICK–UP DETAILS FOR PILES
SCALE 1 : 10

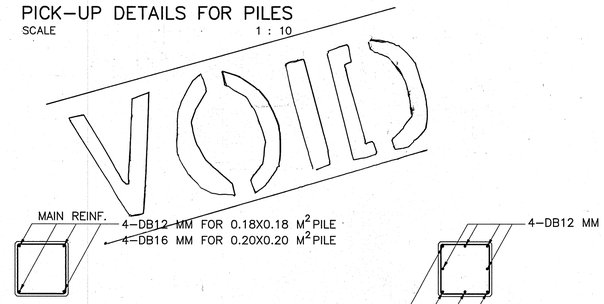

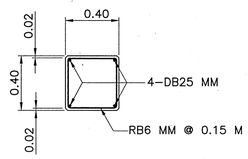

SECTION A – A
SCALE 1 : 20

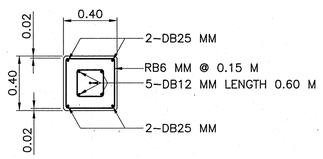

SECTION B – B
SCALE 1 : 20

SECTION C – C
SCALE 1 : 20

SECTION D – D
SCALE 1 : 20

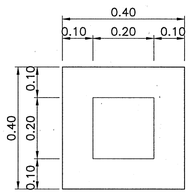

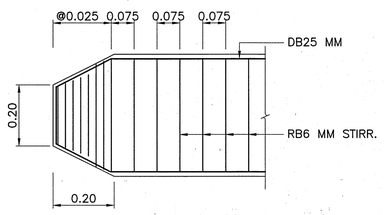

DETAIL OF PILE TIP CAST IRON TYPE A FOR 0.40X0.40 M PILE
SCALE 1 : 10

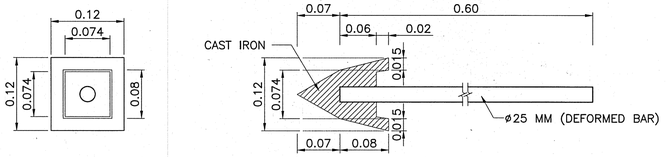

DETAIL OF PILE TIP CAST IRON TYPE B FOR 0.40X0.40 M PILE
SCALE 1 : 5

CONSTRUCTION SPECIFICATIONS

1. GENERAL NOTES FOR RETAINING WALL
   - 1.1 CONCRETE SHALL HAVE A MINIMUM ULTIMATE COMPRESSIVE STRENGTH OF 30 MPa (306 KG/CM^2) FOR 0.15x0.15x0.15 M. CUBE AT 28 DAYS.
   - 1.2 AFTER THE FOUNDATION UNDERNEATH IS COMPACTED, THE LEAN CONCRETE SHALL BE PLACED FOR 0.10 M THICK AS THE BASE WITH 0.10 M AROUND WIDER THAN THE FOUNDATION THE MIX DESIGN OF THE LEAN CONCRETE IS 1 : 3 : 6 BY VOLUMN.
   - 1.3 CONCRETE COVER SHALL BE 0.03 M EXCEPT FOR THE FOUNDATION STRUCTURE THE CONCRETE COVER SHALL BE 0.05 M. IN CASE OF THE MARINE CLAY, CONCRETE COVER FOR THE OTHER PART OF THE WALL AND THE FOUNDATION FACING THE MARINE SOIL SHALL BE ADDED 0.025 M. FROM THE DIMENSIONS SHOWN ON THIS DRAWING.
   - 1.4 EARTH BACKFILL SHALL BE SANDY SOIL OR GRAVEL SOIL OR ROCK OR OTHER SOIL IN THE CONSTRUCTION AREA HAVING THE SAME QUALITIES BY THE APPROVAL OF THE ENGINEER.
2. SPECIAL NOTE FOR RETAINING WALL WITH PILE FOUNDATION
   - 2.1 THE ELEVATION OF THE FOUNDATION SHALL BE AT LEAST THE SAME LEVEL AS THE EXISTING GROUND MEASURED FROM THE SURFACE OF THE LEAN CONCRETE.
   - 2.2 VARIOUS SIZES OF RC. PILE GIVEN IN THIS DRAWING HAVE THE DETAIL AS FOLLOWS:–
     - 2.2.1 RC. PILE SIZE 0.40 x 0.40 M SHALL BE DRIVEN UNTIL IT REACHES ALLOWABLE LOAD WHICH MUST NOT BE LESS THAN 50 TONS IF THE DEPTH OF THE DRIVEN PILE IS LESS THAN 10.00 M, PILE LOAD TEST MUST BE PERFORMED TO ENSURE THAT ALLOWABLE TENSILE STRENGTH IS NOT LESS THAN 15 TONS.
     - 2.2.2 RC. PILE SIZE 0.22 x 0.22 M SHALL BE DRIVEN UNTIL IT REACHES ALLOWABLE LOAD WHICH MUST NOT BE LESS THAN 20 TONS IF THE DEPTH OF THE DRIVEN PILE IS LESS THAN 10.00 M PILE LOAD TEST MUST BE PERFORMED TO ENSURE THAT ALLOWABLE TENSILE STRENGTH IS NOT LESS THAN 4 TONS.
     - 2.2.3 TO TEST THE ALLOWABLE LOAD OF PILE, THE METHOD OF "STATIC PILE LOAD TEST" SHALL BE CONDUCTED AND THE CALCULATION OF ALLOWABLE LOAD CAN BE OBTAINED AS FOLLOW :
       - A. IN CASE OF THE TESTED PILE CAN RESIST MORE THAN GIVEN ALLOWABLE LOAD FOR PILE SIZE IN 3.2.1, 3.2.2 AND 3.2.3. THE AVERAGE SETTLEMENT RATIO OF PILE (TOTAL SETTLEMENT OF PILE HEAD AT THAT TIME/LOADING SUBJECTED TO PILE HEAD AT THE SAME TIME.) SHALL NOT EXCEED 20 MM/ PILE IN 24 HOURS THEN ALLOWABLE LOAD CAN BE OBTAINED AS A HALF OF SUBJECTED LOAD (FACTOR OF SAFETY = 2.0)
       - B. IN CASE OF SETTLEMENT RATIO EXCEEDING THE VALUE INDICATED IN A. OR INCREASING LOAD ON PILE HEAD UNTILITS FAILURE, ALLOWABLE LOAD IS CONTAINED BY DEVIDING THAT LOAD BY 2.5 (FACTOR OF SAFTY = 2.5) IN CASE OF STATIC PILE LOAD TEST CAN NOT BE PERFORMED, ALLOWABLE LOAD MIGHT BE COMPUTED BY PILE DRIVING FORMULAS SUCH AS HILEY FORMULA, JUNBO FORMULA OR DANISH FORMULA USING FACTOR OF SAFETY AT LEAST 3.0
     - 2.2.4 PRECAST CONCRETE FOR PILE SHALL HAVE ULTIMATE COMPRESSIVE STRENGTH AT LEAST 45 MPa. (459 KG/CM.^{2}) FOR 0.15x0.15x0.15 M CUBE AT 28 DAYS AND CONCRETE SLUMP TEST CAN NOT EXCEED 0.08 M
     - 2.2.5 BEFORE CONSTURCTION OF BASE OF RETAINING WALL, THE TOP OF PILE SHALL BE CHISELED AND BEND THE MAIN REINFORCING STELL AS SHOWN IN THE DRAWING OR USE THE METHOD OF WELDING THE REINFORCING STEEL WITH THE SAME SIZE OF STEEL OF WELDING THE REINFORCING STEEL WITH THE SAME SIZE OF STEEL AS SHOWN IN THE DRAWING.
     - 2.2.6 FOR PILE SIZE 0.40 x 0.40 M USING PILE TIP EITHER TYPE A OR B DEPENDS ON OWNER DIVISION.
3. REINFORCING STEEL NOTE:
   - 3.1 ALL REINFORCING STEEL SHALL BE INTERMEDIATE GRADE DEFORMED BAR (CONFORM TO TIS 24, SD 40) EXCEPT FOR BAR DIAMETER IS LESS THAN 12 MM WHICH MA BE STRUCTURE GRADE. (CONFORM TO TIS 20, SR 24)
   - 3.2 IN CASE OF SPLICING OF REINFORCEMENT SPLICING SHALL BE BY AROUND BUTT–WELDING WHICH THE STRENGTH OF WELDED JOINT IS NOT LESS THAN THE ULTIMATE TENSILE STRENGTH OR BY LAPPING BARS WHICH THE LAP LENGTH SHALL NOT BE LESS THAN ø20 TIMES THE BAR DIAMETER FOR THE INTERMEDIATE GRADE REINFORCING STEEL (40 TIMES THE BAR DIAMETERS FOR STRUCTURAL GRADE REINFORCING STEEL) LOCATION OF THE LAPPED BARS BE SPACED APART UNDER CONSIDERATION OF THE INSPECTOR.
4. THE P.V.C. PIPE FOR THE SLEEVE SHALL CONFROM TO TIS. 17 CLASS 13.5 THE SLEEVE SHALL BE MADE AT THE CONNECTION POINT OF THE WATER SUPPLY DISTRIBUTION PIPE TO THE ROADSIDE BUILDING IN CASE OF NO DISTRIBUTION PIPE OR NO ROADSIDE BUILDINGS, THE SLEEVE SHALL ALSO BE MADE, BUT AT THE POINTS EXPECTING FOR FUTURE WATER SUPPLY AS DIRECTED BY THE ENGINEER AND THE ENDS OF THE SLEEVE BE PLUGGED WITH P.V.C. PLUG WHEN NOT IN USE.

NOTES:

1) ALL DIMENSIONS ARE IN METERS UNLESS OTHERWISE INDICATED.
2) ANY PROBLEMS DUE TO THE DESIGNATIONS SHALL BE CONSIDERED AND DECIDED BY THE ENGINEER.
3) RETAINING WALLS SHOWN ON THIS DRWING SHALL BE USED FOR ROADWAY EMBANKMENT THAT IS PROPERLY DESIGNED.

REF.	REVISION	SIGNATURE	DATE

KINGDOM OF THAILAND

MINISTRY OF TRANSPORT
DEPARTMENT OF HIGHWAYS

STANDARD DRAWING

RETAINING WALL

RETAINING WALL TYPE 5, PILE DETAILS

DESIGNED : D.O.H. & CONSULTANTS	**CHECKED :** BUREAU OF LOCATION & DESIGN	**DATE :** OCT 2015
SUBMITTED : (DIRECTOR OF LOCATION & DESIGN BUREAU)		**SCALE :** AS SHOWN
APPROVED : (FOR DIRECTOR GENERAL)		**DWG NO.** RT–108
		SHEET NO. 333

D:\std dwg 2015\RT-108(REV00)

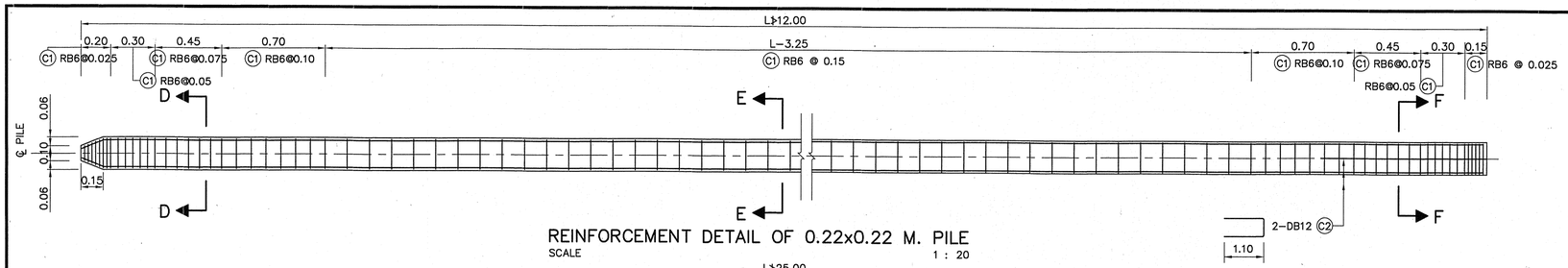

REINFORCEMENT DETAIL OF 0.22x0.22 M. PILE

SCALE 1 : 20

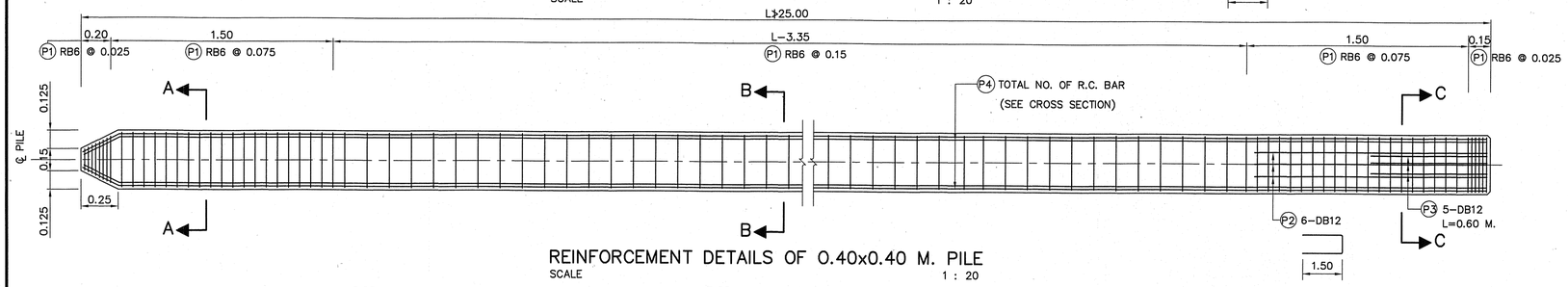

REINFORCEMENT DETAILS OF 0.40x0.40 M. PILE

SCALE 1 : 20

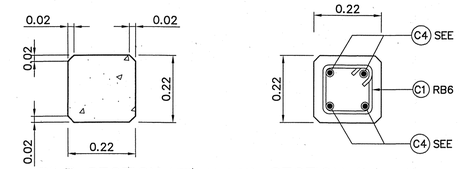

PILE SECTION (▱0.22x0.22)

SCALE 1 : 10

SECTION D – D

SCALE 1 : 10

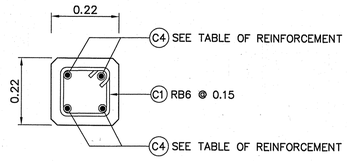

SECTION E – E

SCALE 1 : 10

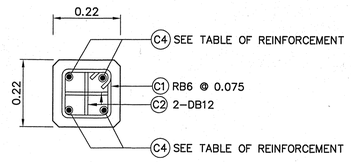

SECTION F – F

SCALE 1 : 10

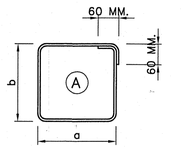

OR

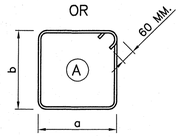

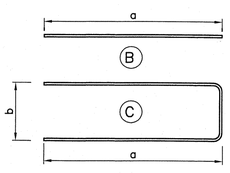

BAR SHAPE CODE

NOT TO SCALE

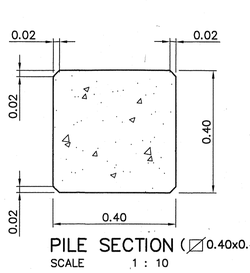

PILE SECTION (▱0.40x0.40)

SCALE 1 : 10

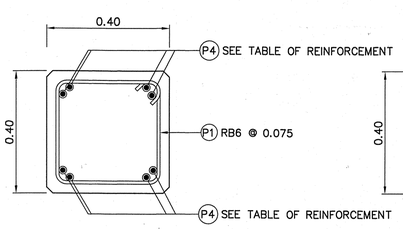

SECTION A – A

SCALE 1 : 10

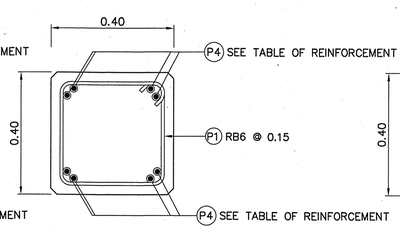

SECTION B – B

SCALE 1 : 10

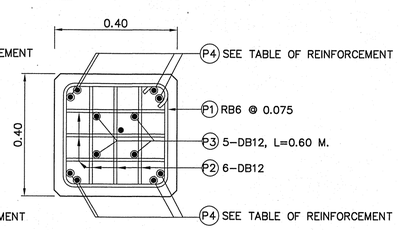

SECTION C – C

SCALE 1 : 10

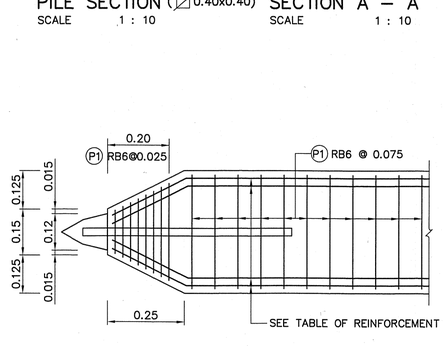

SECTION G – G

SCALE 1 : 10

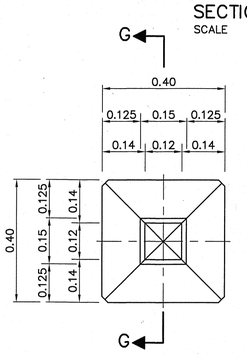

PILE SHOE SECTION

SCALE 1 : 10

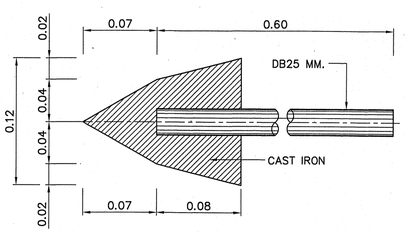

CAST IRON PILE DETAIL

NOT TO SCALE

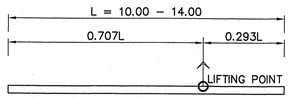

ONE–POINT LIFTING METHOD

NOT TO SCALE

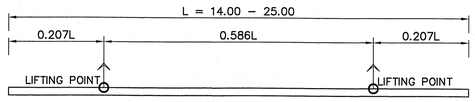

TWO–POINT LIFTING METHOD

NOT TO SCALE

DETAILS OF THE PILE SHOE USE DRIVEN PILE ON PARENT ROCK LAYER OR BEDROCK LAYER

SCALE 1 : 10

CONSTRUCTION SPECIFICATIONS

1. GENERAL NOTES FOR RETAINING WALL
   - 1.1 CONCRETE SHALL HAVE A MINIMUM ULTIMATE COMPRESSIVE STRENGTH OF 30 MPa (306 KG/CM^2) FOR 0.15x0.15x0.15 M. CUBE AT 28 DAYS.
   - 1.2 AFTER THE FOUNDATION UNDERNEATH IS COMPACTED, THE LEAN CONCRETE SHALL BE PLACED FOR 0.10 M THICK AS THE BASE WITH 0.10 M AROUND WIDER THAN THE FOUNDATION THE MIX DESIGN OF THE LEAN CONCRETE IS 1 : 3 : 6 BY VOLUMN.
   - 1.3 CONCRETE COVER SHALL BE 0.03 M EXCEPT FOR THE FOUNDATION STRUCTURE THE CONCRETE COVER SHALL BE 0.05 M. IN CASE OF THE MARINE CLAY, CONCRETE COVER FOR THE OTHER PART OF THE WALL AND THE FOUNDATION FACING THE MARINE SOIL SHALL BE ADDED 0.025 M. FROM THE DIMENSIONS SHOWN ON THIS DRAWING.
   - 1.4 EARTH BACKFILL SHALL BE SANDY SOIL OR GRAVEL SOIL OR ROCK OR OTHER SOIL IN THE CONSTRUCTION AREA HAVING THE SAME QUALITIES BY THE APPROVAL OF THE ENGINEER.
2. SPECIAL NOTE FOR RETAINING WALL WITH PILE FOUNDATION
   - 2.1 THE ELEVATION OF THE FOUNDATION SHALL BE AT LEAST THE SAME LEVEL AS THE EXISTING GROUND MEASURED FROM THE SURFACE OF THE LEAN CONCRETE.
   - 2.2 VARIOUS SIZES OF RC. PILE GIVEN IN THIS DRAWING HAVE THE DETAIL AS FOLLOWS: –
     - 2.2.1 RC. PILE SIZE 0.40 x 0.40 M SHALL BE DRIVEN UNTIL IT REACHES ALLOWABLE LOAD WHICH MUST NOT BE LESS THAN 50 TONS IF THE DEPTH OF THE DRIVEN PILE IS LESS THAN 10.00 M, PILE LOAD TEST (FACTOR OF SAFETY = 2.0) OR CALCULATION (FACTOR OF SAFETY = 2.5) MUST BE PERFORMED TO ENSURE THAT ALLOWABLE TENSILE STRENGTH IS NOT LESS THAN 15 TONS.
     - 2.2.2 RC. PILE SIZE 0.22 x 0.22 M SHALL BE DRIVEN UNTIL IT REACHES ALLOWABLE LOAD WHICH MUST NOT BE LESS THAN 20 TONS IF THE DEPTH OF THE DRIVEN PILE IS LESS THAN 10.00 M, PILE LOAD TEST (FACTOR OF SAFETY = 2.0) OR CALCULATION (FACTOR OF SAFETY = 2.5) MUST BE PERFORMED TO ENSURE THAT ALLOWABLE TENSILE STRENGTH IS NOT LESS THAN 4 TONS.
     - 2.2.3 TO TEST THE ALLOWABLE LOAD OF PILE, THE METHOD OF "STATIC PILE LOAD TEST" SHALL BE CONDUCTED AND THE CALCULATION OF ALLOWABLE LOAD CAN BE OBTAINED AS FOLLOW :
       - A. IN CASE OF THE TESTED PILE CAN RESIST MORE THAN GIVEN ALLOWABLE LOAD FOR PILE SIZE IN 3.2.1, 3.2.2 AND 3.2.3. THE AVERAGE SETTLEMENT RATIO OF PILE (TOTAL SETTLEMENT OF PILE HEAD AT THAT TIME/LOADING SUBJECTED TO PILE HEAD AT THE SAME TIME.) SHALL NOT EXCEED 20 MM./ PILE IN 24 HOURS THEN ALLOWABLE LOAD CAN BE OBTAINED AS A HALF OF SUBJECTED LOAD (FACTOR OF SAFETY = 2.0)
       - B. IN CASE OF SETTLEMENT RATIO EXCEEDING THE VALUE INDICATED IN A. OR INCREASING LOAD ON PILE HEAD UNTILITS FAILURE, ALLOWABLE LOAD IS CONTAINED BY DEVIDING THAT LOAD BY 2.5 (FACTOR OF SAFETY = 2.5) IN CASE OF STATIC PILE LOAD TEST CAN NOT BE PERFORMED, ALLOWABLE LOAD MIGHT BE COMPUTED BY PILE DRIVING FORMULAS SUCH AS HILEY FORMULA, JUNBO FORMULA OR DANISH FORMULA USING FACTOR OF SAFETY AT LEAST 3.0
     - 2.2.4 PRECAST CONCRETE FOR PILE SHALL HAVE ULTIMATE COMPRESSIVE STRENGTH AT LEAST 45 MPa. (459 KG/CM.^{2}) FOR 0.15x0.15x0.15 M CUBE AT 28 DAYS AND CONCRETE SLUMP TEST CAN NOT EXCEED 0.08 M
     - 2.2.5 BEFORE CONSTURCTION OF BASE OF RETAINING WALL, THE TOP OF PILE SHALL BE CHISELED AND BEND THE MAIN REINFORCING STELL AS SHOWN IN THE DRAWING OR USE THE METHOD OF WELDING THE REINFORCING STEEL WITH THE SAME SIZE OF STEEL OF WELDING THE REINFORCING STEEL WITH THE SAME SIZE OF STEEL AS SHOWN IN THE DRAWING.
     - 2.2.6 FOR PILE SIZE 0.40 x 0.40 M USING PILE TIP EITHER TYPE A OR B DEPENDS ON OWNER DIVISION.
3. REINFORCING STEEL NOTE:
   - 3.1 ALL REINFORCING STEEL SHALL BE INTERMEDIATE GRADE DEFORMED BAR (CONFORM TO TIS 24, SD 40) EXCEPT FOR BAR DIAMETER IS LESS THAN 12 MM WHICH MA BE STRUCTURE GRADE. (CONFORM TO TIS 20, SR 24)
   - 3.2 IN CASE OF SPLICING OF REINFORCEMENT SPLICING SHALL BE BY AROUND BUTT–WELDING WHICH THE STRENGTH OF WELDED JOINT IS NOT LESS THAN THE ULTIMATE TENSILE STRENGTH OR BY LAPPING BARS WHICH THE LAP LENGTH SHALL NOT BE LESS THAN ø20 TIMES THE BAR DIAMETER FOR THE INTERMEDIATE GRADE REINFORCING STEEL (40 TIMES THE BAR DIAMETERS FOR STRUCTURAL GRADE REINFORCING STEEL) LOCATION OF THE LAPPED BARS BE SPACED APART UNDER CONSIDERATION OF THE INSPECTOR.
4. THE P.V.C. PIPE FOR THE SLEEVE SHALL CONFROM TO TIS. 17 CLASS 13.5 THE SLEEVE SHALL BE MADE AT THE CONNECTION POINT OF THE WATER SUPPLY DISTRIBUTION PIPE TO THE ROADSIDE BUILDING IN CASE OF NO DISTRIBUTION PIPE OR NO ROADSIDE BUILDINGS, THE SLEEVE SHALL ALSO BE MADE, BUT AT THE POINTS EXPECTING FOR FUTURE WATER SUPPLY AS DIRECTED BY THE ENGINEER AND THE ENDS OF THE SLEEVE BE PLUGGED WITH P.V.C. PLUG WHEN NOT IN USE.

NOTES:

1) ALL DIMENSIONS ARE IN METERS UNLESS OTHERWISE INDICATED.
2) ANY PROBLEMS DUE TO THE DESIGNATIONS SHALL BE CONSIDERED AND DECIDED BY THE ENGINEER.
3) RETAINING WALLS SHOWN ON THIS DRWING SHALL BE USED FOR ROADWAY EMBANKMENT THAT IS PROPERLY DESIGNED.
4) PILE SIZE 0.40 X 0.40 M. SPLICING JOINT IS ACCORDING TO DWG. PL–101.
5) PILE SIZE 0.22 X 0.22 M. EXTENSION DETAILS IS ACCORDING TO DWG. BU–102.

REINFORCEMENT SCHEDULE (▱ 0.40x0.40 M.)

BAR MARK	TYPE& SIZE(MM.)	SPACING (MM.)	SHAPE CODE	LENGTH (MM.)	
				a	b
P1	RB6	25, 75, 150	A	300, VARIES	300, VARIES
P2	DB12	–	C	1500	288
P3	DB12	–	B	600	–
P4	SEE TABLE "A"	–	B	LENGTH OF PILE	
P5*	DB25	–	B	3000	–

REINFORCEMENT SCHEDULE (▱0.22x0.22 M.)

BAR MARK	TYPE& SIZE(MM.)	SPACING (MM.)	SHAPE CODE	LENGTH (MM.)	
				a	b
C1	RB6	25, 50, 75 100, 150	A	120, VARIES	120, VARIES
C2	DB12	–	C	1100	108
C3	–	–	–	–	–
C4	SEE TABLE "B"	–	B	LENGTH OF PILE	

TABLE "A" (AMOUNT REINFORCEMENT)

LENGTHS (M.)	REINFORCEMENT	NUMBER OF LIFTING POINTS
⩽ 14.00	8–DB 20 MM. OR 4–DB 28 MM.	ONE
14.01–20.00	8–DB 20 MM. OR 4–DB 28 MM.	TWO
20.01–25.00	8–DB 25 MM.	TWO

REMARK : PILE SIZE (▱0.40x0.40 M.)
P5* FOR SPLICING JOINT ONLY

TABLE "B" (AMOUNT REINFORCEMENT)

LENGTHS (M.)	MAIN BARS	NUMBER OF LIFTING POINTS
⩽ 10.00	4–DB 12 MM.	TWO
10.01–12.00	4–DB 16 MM.	TWO

REMARK : PILE SIZE (▱0.22x0.22 M.)

REV.	REVISION	SIGNATURE	DATE
REV.1	REVISION 1/2021		JAN 2021

KINGDOM OF THAILAND

MINISTRY OF TRANSPORT

DEPARTMENT OF HIGHWAYS

STANDARD DRAWING

RETAINING WALL

RETAINING WALL TYPE 5, PILE DETAILS

DESIGNED : D.O.H. & CONSULTANTS	CHECKED : BUREAU OF LOCATION & DESIGN	DATE : OCT 2015
SUBMITTED : (DIRECTOR OF LOCATION & DESIGN BUREAU)		SCALE : AS SHOWN
APPROVED : (FOR DIRECTOR GENERAL)		DWG NO. RT–108
		SHEET NO. 333/R1

D:\Work of DOH\งานโครงการปี 2564\801 STD แก้ไขแบบแล้วเสร็จ RT-108 [Ready]\RT-108(REV01 _Edit by SS.Chai)

STANDARD DRAWINGS PREPARATION WORKING GROUP

DEPARTMENT OF HIGHWAYS

1.	MR. ASAWIN KANNASUT	ADVISOR

DEPARTMENT OF HIGHWAYS' COMMITTEE

1.	MR. KHASAME SRIVARANUN	CHAIRMAN
2.	MR. SOMBAT JAROENPAT	VICE CHAIRMAN
3.	MR. PISITH SIRVARANUN	MEMBER
4.	MR. APIRAT CHAIWONGNOI	MEMBER
5.	MR. SUTHICHAI SONTHIMUL	MEMBER
6.	MR. NARIN SRISOMPUN	MEMBER
7.	DR. MONTRI DECHASAKULSOM	MEMBER
8.	MR. VARIN PHETCHARAVUT	MEMBER
9.	DR. WANCHAK CHAYAKUL	MEMBER
10.	MR. SOMPORN RATTANABURI	MEMBER
11.	MR. SOMBOON THAINTUMMARCHART	MEMBER
12.	MR. PORNPOT SURIYONT	MEMBER AND HIGHWAY ENGINEERING SUPERVISOR
13.	MR. ANAT PRATHARNSAP	MEMBER AND HIGHWAY ENGINEERING SUPERVISOR
14.	MR. PHAISAN SUWANNARUK	MEMBER AND HIGHWAY ENGINEERING SUPERVISOR
15.	MR. PONGPAN CHANTARAGUL	MEMBER AND STRUCTURAL ENGINEERING SUPERVISOR
16.	MR. TANIN RIRATTANAPONG	MEMBER AND STRUCTURAL ENGINEERING SUPERVISOR
17.	MR. WIROTE KONGKEAW	MEMBER AND STRUCTURAL ENGINEERING SUPERVISOR
18.	MR. SOMKHANA SAMTHAPPHRA	MEMBER AND PROJECT MANAGER
19.	MR. SUPHACHOKE MEEAMPOL	MEMBER AND ASSISTANT PROJECT MANAGER
20.	MR. PAKORN SRIPANWONG	MEMBER AND ASSISTANT PROJECT MANAGER
21.	MR. PERMWUT BURAPASIRIWAT	MEMBER AND ASSISTANT PROJECT MANAGER

DEPARTMENT OF HIGHWAYS' WORKING GROUP

1.	MR. SAWANG BURANATHANANUKIT	BUREAU OF HIGHWAYS CONSTRUCTION
2.	MR. CHAVALERT LERTCHAVANAKUL	BUREAU OF BRIDGE CONSTRUCTION
3.	MR. SUJIN MUNGNIMIT	BUREAU OF HIGHWAYS SAFETY
4.	MR. PONGPHAN JUNNGERN	BUREAU OF HIGHWAYS SAFETY
5.	MR. SOMYONK UNTAMA	BUREAU OF HIGHWAYS SAFETY
6.	DR. BHANITIZ AURSUDKIJ	BUREAU OF HIGHWAYS SAFETY
7.	MR. CHORCHAT CHUMSRI	BUREAU OF HIGHWAYS SAFETY
8.	MR. CHAIVUT KANJANASANTISUK	BUREAU OF HIGHWAYS SAFETY
9.	MR. PREMVUT CHANTANAVONG	BUREAU OF HIGHWAYS SAFETY
10.	DR. AUCKPATH SAWANGSURIYA	BUREAU OF ROAD RESEARCH AND DEVELOPMENT
11.	DR. JIRAROTH SUKOLRAT	BUREAU OF ROAD RESEARCH AND DEVELOPMENT
12.	DR. JUTHA SUNITSUKUL	BUREAU OF MATERIALS ANALYSIS AND INSPECTION
13.	DR. CHAIRAT SUPACHAWAROTE	BUREAU OF MATERIALS ANALYSIS AND INSPECTION
14.	DR. PORANIC JITAREEKUL	BUREAU OF MATERIALS ANALYSIS AND INSPECTION
15.	MR. THARTREE PAIJITPRAPAPORN	BUREAU OF LOCATION AND DESIGN
16.	MR. WICHAI KHUNTIPHROMPHOL	BUREAU OF LOCATION AND DESIGN
17.	MR. ANUPARP CHAROENSAK	BUREAU OF LOCATION AND DESIGN
18.	MR. BOONTHAM KRAISONSRI	BUREAU OF LOCATION AND DESIGN
19.	MR KANATE LERTRUTDACHAKULL	BUREAU OF LOCATION AND DESIGN
20.	MR. VARODOM RUENNAK	BUREAU OF LOCATION AND DESIGN
21.	MR NUTTASAK ARIYAPURK	BUREAU OF LOCATION AND DESIGN
22.	MR. SUPACHAI MAHAKIT	BUREAU OF LOCATION AND DESIGN
23.	MR. NOPPADOL NUMNOI	BUREAU OF LOCATION AND DESIGN
24.	MISS SAOWAPHA MANEEYEN	BUREAU OF LOCATION AND DESIGN
25.	DR. WASIN RUJIKIETGUMJORN	BUREAU OF LOCATION AND DESIGN

CONSULTANTS

1. TEAM CONSULTING ENGINEERING AND MANAGEMENT CO., LTD.
2. GEOTECHNICAL AND FOUNDATION ENGINEERING CO., LTD.

CONSULTANT'S WORKING GROUP — PROJECT MANAGER

1.	MR. WIROTE LATTAKAWIBOON	HIGHWAY ENGINEER
2.	MR. CHANCHAI GAWGIRDWIBOON	HIGHWAY ENGINEER
3.	MR. POLRACH KHONGCHUM	HIGHWAY ENGINEER
4.	MISS KATTIYA D.AQUIRE	HIGHWAY ENGINEER
5.	MR. TAWEESAK POYAROD	HIGHWAY ENGINEER
6.	MR. JADOON PHANSUWAN	HIGHWAY ENGINEER
7.	MR. KRAIRIT CHAITHAISONG	HIGHWAY ENGINEER
8.	MR. SOMSAK CHANTRAPIWAT	HIGHWAY ENGINEER
9.	MR. RATTAPOL MILETREECHIT	STRUCTURAL ENGINEER
10.	DR. CHAICHAN SUTTIKARN	STRUCTURAL ENGINEER
11.	DR. SUDATHIP TANGWONGCHAI	STRUCTURAL ENGINEER
12.	MR. CHANCHAI INGKANISORN	STRUCTURAL ENGINEER
13.	MR. PIROME ONLAMOOL	STRUCTURAL ENGINEER
14.	DR. PIMPIDA CHANJARUKSAKUL	GEOTECHNICAL ENGINEER
15.	DR. TEERAWUT JUIRNARONGRIT	GEOTECHNICAL ENGINEER
16.	MR. SOMKIAT CHITPRASERT	GEOTECHNICAL ENGINEER
17.	MR. WEERAYUT KOMOLWILART	ELECTRICAL ENGINEER
18.	MR. SONGWUT SUBSUTHI	ARCHITECT
19.	MR. NARATHIP TALUNGCHIT	ARCHITECT
20.	MR. DET MANATOR	